Close at hand

Spare parts for Heat exchangers, Hygienic Fluid Handling Equipment, August 2022

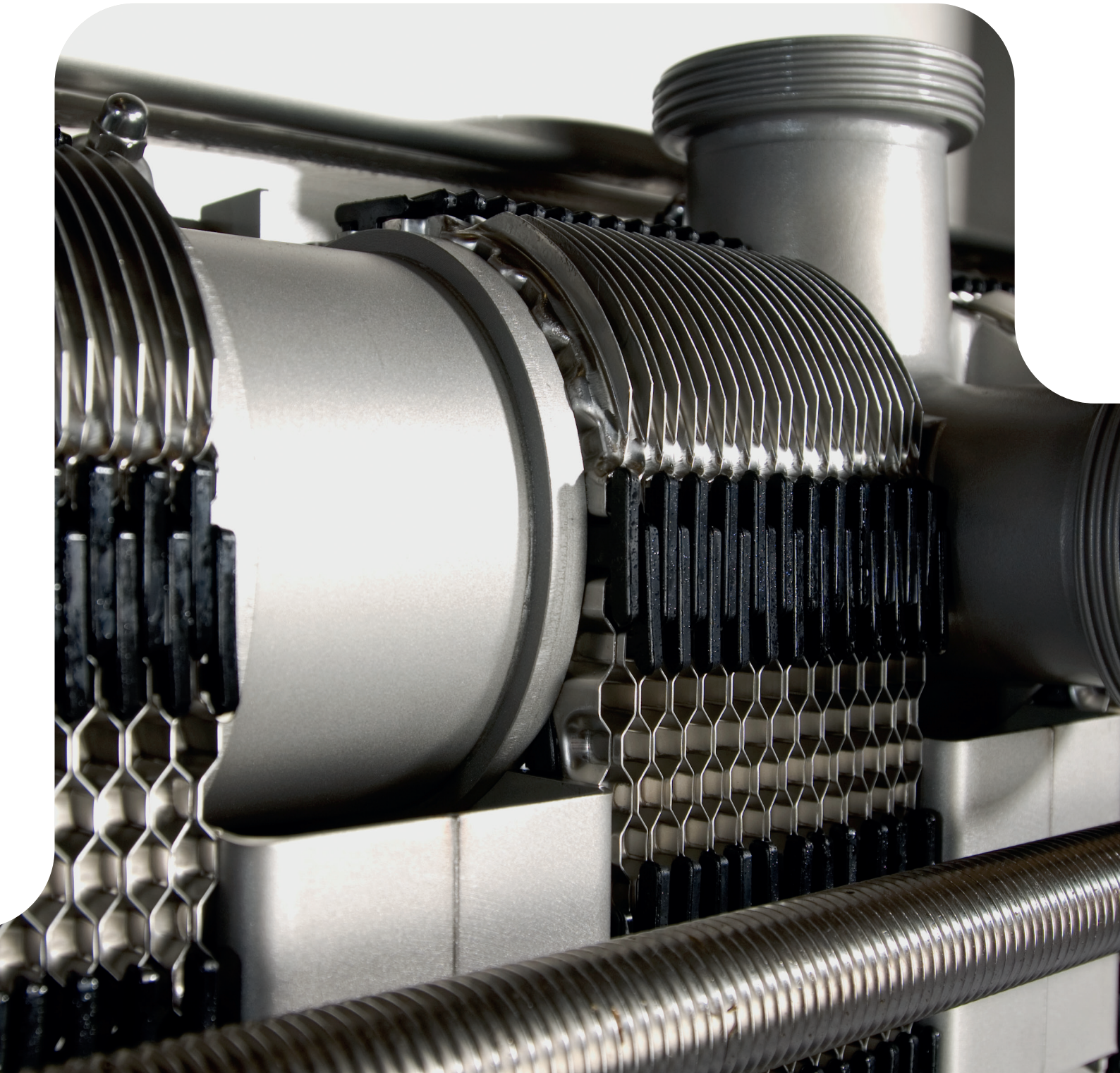

1. Heat Exchangers

Our heat exchangers are developed not only to meet your demands for safety, efficiency and hygiene, but also to ensure the careful handling of your products.

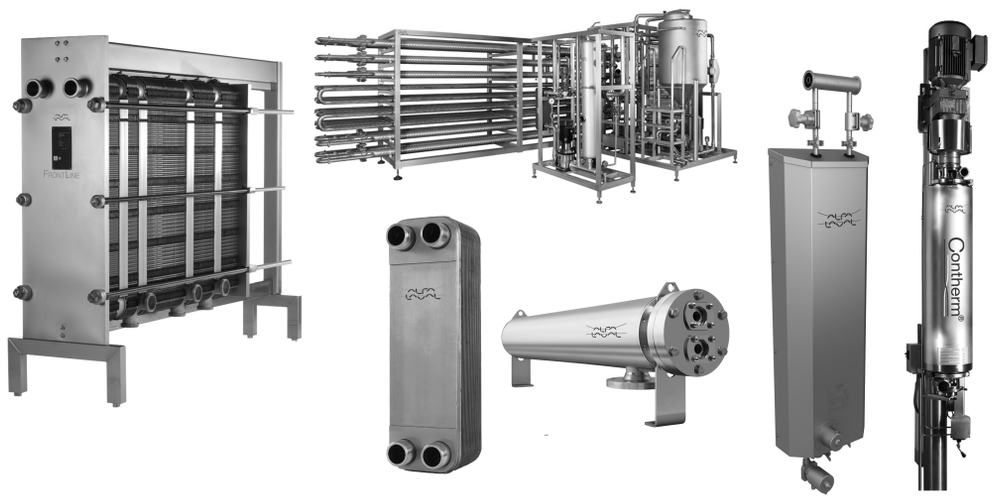

General information 1.1
Gasketed Plate-and-Frame Heat Exchangers 1.2
Shell and Tube Heat Exchangers 1.3

1.1 General information

Genuine spare parts and service kits
Genuine spare parts and service kits 1.1.7

Service tools
Alfa Laval service tools 1.1.8

Technical data - stainless steel and rubber materials
Technical Information 1.1.9

360° service portfolio
360° service portfolio 1.1.11

Service and maintenance training
Service and maintenance training - gasketed plate heat exchangers 1.1.12

Preventive Maintenance Guidelines
Hygienic gasketed plate heat exchangers 1.1.13

360° service & maintenance videos
360° service & maintenance videos 1.1.15

Total piece of mind

Genuine spare parts and service kits

Alfa Laval spare parts are engineered and machined for optimal fit with guarantee for superior performance and uptime.

Using Alfa Laval genuine spare parts ensures the lowest possible total cost of ownership over the entire life cycle of your Alfa Laval equipment.

Furthermore the Alfa Laval spare parts meet all certification requirements and include documentation package with full traceability (1935/2004/EC) compliance with hygienic standards USP, FDA, EU-regulations, 3-A, EHEDG, ASME BPE, etc.

Alfa Laval spare parts are available 24/7 through extensive network of channel partners and distribution centres, and you can always contact us for technical service support and training, if needed.

Benefits when buying genuine spare parts:

- Certified materials
- Guaranteed performance - tested in laboratories.
- Maximum uptime – proven reliability.
- Longer maintenance intervals.
- Continuously improvement to meet the highest requirements and hygienic standards.
- 3 years extended warranty on the pumps & valves.

Service kits

Alfa Laval recommends that you buy complete service kits instead of indiviual parts, as each service kit contain all the spare parts you need for generel maintenance.

Futhermore, the complete service kits gives you several other advantages such as:

- Save time - simply order one service kit, rather that a lot of invidual items.
- Each service kit has a single part number - less stock numbers to deal with.
- The price of the service kits is less that the total price of the individual items.
- You do not have to carry a large spare parts inventory.
- Service kit for UltraPure products include full Alfa Laval Q-doc package.
- Each service kit contain a small instruction with a QR code, with access to our service & maintenance guidelines and videos.



The right o-ring quality

O-ring compression and swell are very important to be within the design limits of the pump and seal tolerances.
If these are not correct, the seal will leak.

The grade of manufacture of the o-rings determines its characteristics:

- Hardness
- Tensile strength
- Compression set
- Swelling

Specially designed service tools for Alfa Laval equipment

Alfa Laval service tools

Part of our Alfa Laval 360° Service Portfolio, Alfa Laval service tools are especially developed to protect Alfa Laval hygienic equipment from faulty service and minimize downtime during maintenance.

Use

Alfa Laval has the specific tools required to service Alfa Laval hygienic equipment. These include tools for installing, operating, maintaining our hygienic equipment.

Benefits

Using the correct Alfa Laval service tools will:

- Decrease service time
- Protect staff from unnecessary safety risks
- Secure service quality
- Maintain equipment performance

Alfa Laval tools are specially designed for Alfa Laval equipment and enables exchange of wear parts in safe order for both the service operator and the equipment.



1.1

Stainless Steel and Rubber Materials

Technical Information

Stainless steel

Our stainless steel material have the following demands to the contents of the most essential alloys:

Descriptions	Standard	Chrome Cr%	Nickel Ni%	Molybdenum Mo%	Carbon C%
AISI 304	ASTM A270	18.0-20.0	8.0-10.5	0.0	≤ 0.08
AISI 304L	ASTM A270	18.0-20.0	8.0-12.0	0.0	≤ 0.03
AISI 316L	ASTM A270	16.0-18.0	10.0-14.0	2.0-3.0	≤ 0.03
1.4301 (304)	EN 10088-1 (X 5CrNi18-10)	17.0-19.5	8.0-10.5	0.0	≤ 0.07
1.4307 (304L)	EN 10088-1 (X 2CrNi18-9)	17.5-19.5	8.0-10.0	0.0	≤ 0.03
1.4401 (316)	EN 10088-1 (X 5CrNiMo17-12-2)	16.5-18.5	10.0-13.0	2.0-2.5	≤ 0.07
1.4404 (316L)	EN 10088-1 (X 2CrNiMo17-12-2)	16.5-18.5	10.0-13.0	2.0-2.5	≤ 0.03
1.4435 (316L)	EN 10088-1 (X 2CrNiMo18-14-3)	17.0-19.0	12.5-15.0	2.5-3.0	≤ 0.03
1.4571 (316TI)	EN 10088-1 (X6CrNiMoTi17-12-2)	16.5-18.5	10.5-13.5	2.0-2.5	≤ 0.08

Rubber materials

In order to obtain the longest possible lifetime for rubber seals it is essential to choose the right quality for the actual duty. Consequently when choosing rubber quality, the characteristics of the different rubber types should be considered. All product wetted rubber material are in conformity of FDA.

EPDM rubber (Ethylene Propylene)

EPDM rubber is widely used within the food industry as it is resistant to most products used in this sector. Another advantage is that it may be used to a recommend max. temperatures of 140°C (244°F). However, there is one essential limitation, EPDM is not resistant to organic and non-organic oils and fats.

Actylonitrile Butadiene Rubber, NBR

NBR is the rubber type most frequently used for technical purposes. It is quite resistant to most hydrocarbons, e.g oil, grease and fat. It is sufficiently resistant to diluted lye and nitric acid and may be used to a recommend max. 95°C (203°F). As NBR is attacked by ozone it may not be exposed to ultravesiolet rays and should thus be stored so that this is avoided.

Silicone rubber, Q

The most significant quality of silicone rubber is that it can be applied from temperatures below -50°C (-58°F) to approx. + 180°C (356°F) and still keep its elasticity. The chemical resistance is satisfactory to most products. However, undiluted lye and acids as well as hot water and steam may destroy silicone rubber. The resistance to ozone is good.

Fluorine rubber, FPM

FPM is often used when other rubber types are unsuited, especially at high temperatures up to approx. 180°C (356°F). The chemical resistance is good to most products, however hot water, steam, lye, acid and alcohol should be avoided. The resistance to ozone is good.

Hydrogenated actylonitrileButadiene Rubber, HNBR

Mechanically strong and normally resistant to ozone and strong oxidizers, animal and vegetable fats, nonpolar solvents, oils and lubricants, water and aqueous solutions. The recommend max. temperature is 130°C (266°F).

Perfluoroalkoxy polymer, PFA

PFA is very similar to PTFE, but opposite to those PFA is thermo plastic and has minimal porosity. PFA has a very high mechanical strength which makes it a perfect choice when dealing with abbrasive products. The PFA seal offers longer service intervals. The recommend max. temperature for the PFA seal is 90°C (194°F).

Product and chemical resistance of flexible rubber materials

The information below is intended as an aid in selecting the best rubber quality for an actual application. It is not possible to state any general lifetime of rubber seals as many factors influence it: chemical attack, temperature, mechanical wear etc. Extreme temperatures, even within the generally accepted limits, may worsen other kinds of attack and thus reduce the lifetime.

Ratings

1 = Unsuitable.
2 = Limited suitability.
3 = Normal suitability.
4 = High suitability.
- = Not recommended for other reasons.

The table contains data which have been complied from the results of our own tests and the recommendations of our raw material suppliers. The data should be considered as recommendations only and will be brought up-to-date from time to time. They are based on constant contact with the specified product.
In case of doubt or lack of information it would be advisable to consult us directly, which will enable us to investigate specific applications.

Product or process		NBR[1)]	HNBR[2)]	EPDM[3)]	Q[4)]	FPM[5)]	PTFE[6)]
Dairy products (milk, cream)		3	3-4	3-4	3-4	-	3-4
Dairy products (sour milk products)		3	3-4	3-4	3-4	-	3-4
Brewery products (beer, hops etc.)		3	3-4	3-4	1-2	2-3	3-4
Wine and yeast		3	3-4	4	4	2-3	3-4
Animal and vegetable fats	100°C	3	4	1-2	3	4	3-4
Water and water solutions	< 70°C	3	4	4	3	2-4	3-4
Hot water and steam	< 130°C	1	4	4	2	-	3-4
Concentrated fruit juices and etheral oils	< 100°C	1	-	1	1	3	3-4
Non-oxydising acids	< 80°C	1-2	2	3	1-2	2	3-4
Oxydising acids	< 80°C	-	2	3	1	2	3-4
Weak concentrate of lye	< 100°C	2	3-4	4	2	2	3-4
Strong concentrate of lye	< 100°C	1	2-3	3	1	1	3-4
Mineral oils	< 110°C	3	4	-	-	4	3-4
Aliphatic carburetted hydrogen (hexane)		3	3	1	1	4	3-4
Aromatic carburetted hydrogen (benzole)		1	2	1	1	3	3-4
Alcohols		1-3	2-3	2-3	3-4	3-4	3-4
Ester and ketones		1-2	1-2	1-2	1-2	3-4	3-4
Ether		1	2	1	1-3	3-4	3-4
Methylene chloride		1	2	1	2-3	3-4	3-4
Ozone and atmospheric conditions		1-2	3	4	4	3-4	3-4

International designation of flexible rubber materials according to ISO R 1629.
ISO = International standard.

Notes

	Designation of flexible rubber materials	Abbreviation symbol
1)	Nitrile rubber	N
2)	Hydrogenated actylonitrile rubber	H
3)	Ethylene propylene rubber	E
4)	Silicone rubber	Q
5)	Fluorinated rubber	F
6)	Polytetraflour ethylene	

Services that extend performance

360° service portfolio

Alfa Laval's expert service is always on hand through our global network. Alfa Laval also offers a wide range of time-saving tools and resources to secure performance, making it easy to configure, size, and optimize Alfa Laval hygienic equipment.

Alfa Laval Service offers a broad range of spare parts, equipment, and services covering the entire equipment life cycle from start-up, support and maintenance to improvements and monitoring. We are committed to ensuring maximum uptime, continuous optimization of your customers' processes, Alfa Laval service kits and top quality spare parts, designed for durability and performance, are always available. We secure that Alfa Laval equipment remains in compliance with certificates and legal requirements in your market.

Alfa Laval Service maximizes the reliability and uptime of Alfa Laval equipment. The result is superior performance throughout the equipment life cycle to give you and your customers a competitive edge. Together with our global service network we can help secure long-term performance.

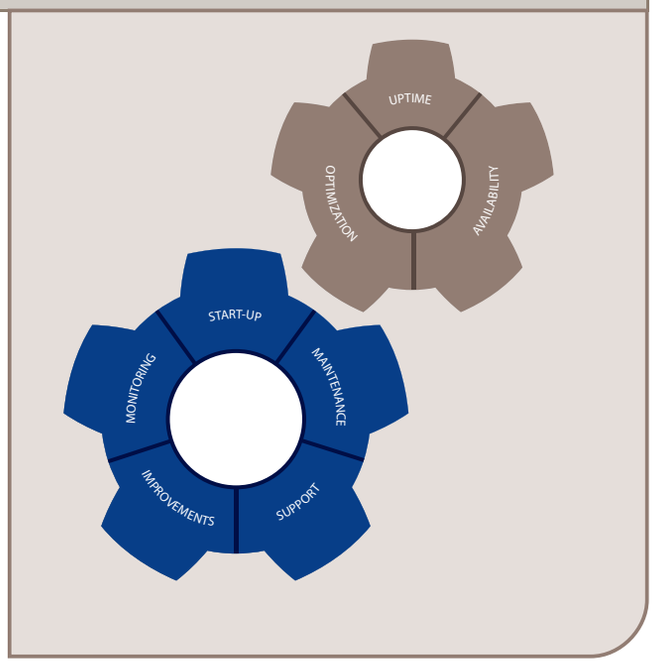

Maximize the reliability and update of your Alfa Laval equipment

Service and maintenance training - gasketed plate heat exchangers

Objective
The objective of this training is that the participants upon completion of the course should feel confident doing maintenance and trouble shooting of Alfa Laval FrontLine and BaseLine in the field.

Content
Maintain, disassemble and rebuild the below hygienic GPHE range in accordance with the Alfa Laval service guidelines:

- FrontLine
- BaseLine

There will be focus on genuine spare parts, preventive maintenance and on a structured way of doing trouble shooting as well as tips and tricks when doing service.

After completing this course, you will

- Be able to perform service on Alfa Laval FrontLine and BaseLine
- Know how to trouble shoot our equipment

Qualifications
A basic knowledge of the hygienic GPHE product range and a good pair of hands!

Participants
Maintenance and service engineers, technical support.

Dates
Training will be held once a year.

Questions regarding the training?
Please contact your local Alfa Laval representative.



Service maintenance guidelines

Hygienic gasketed plate heat exchangers

Plan your budget and your downtime

A production stop caused by poor operation or breakdown is costly. Both due to lost product and expensive service.

The most cost-effective way to ensure product safety and production reliability, is to plan and carry out service at scheduled intervals.

Using the Alfa Laval guidelines it is easy to plan the relevant maintenance intervals. You are able to plan your operating budget and the risk of breakdowns is virtually eliminated. Financially, preventive maintenance makes sense.

Instruction manuals and service videos

Detailed manuals are supplied with every product. Service and maintenance videos have been created to enable you to service Alfa Laval products in a correct and efficient way. Scan the QR code to access the service videos.

Genuine spare parts and service kits

Alfa Laval Service Kits and Upgrade Kits are available for scheduled maintenance. They contain all the **relevant parts needed for general service**. Using genuine Alfa Laval spare parts guarantees the right quality and composition of materials. Needless to say they come with full traceability. Scan the QR code to access the spare parts catalogue..



footnote

Alfa Laval service tools

Alfa Laval has the specific tools required to service Alfa Laval hygienic equipment. These include tools for installing, operating and maintaining our hygienic equipment.

Using genuine spare parts ensures your certicates are still valid.

Example of exploded view - Front8

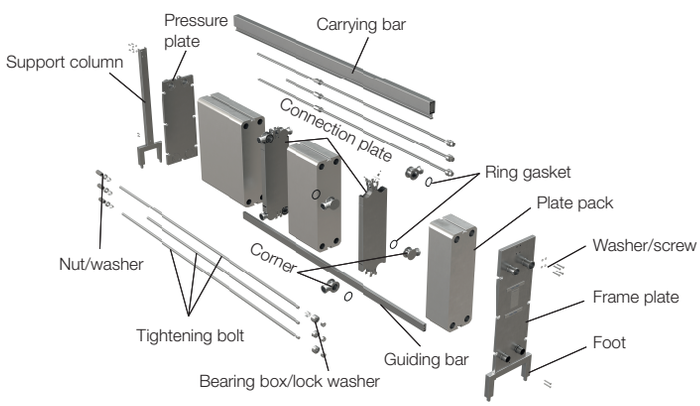

Gasket - ageing

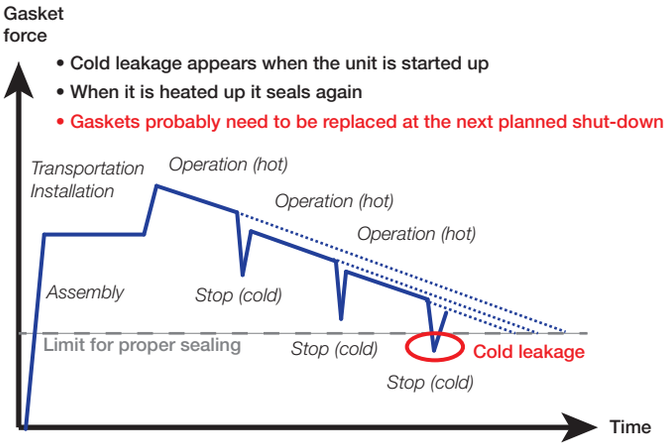

Temperature, pressure and environment are important factors affecting gasket wear and tear. Schedule maintenance at a convenient time before reaching the proper sealing limit.

Factors effecting efficiency and lifetime

Maintaining heat transfer and sealing efficiencies is vital to productivity. Regular and frequent cleaning ensures heat transfer efficiency as well as preventing the build up of residual material on the plates. Barring the presence of corrosive media, clean plates effectively limit other factors that could contribute to gasket wear

A gasket, its material properties and its construction are specifically selected to provide optimum sealing performance for its intended application. Knowing exactly when to replace gaskets is difficult as the timing varies depending on the application.

But over time, all gaskets wear due to natural ageing as well as the temperature, pressure and stress of normal operating conditions. In extreme cases, gaskets are also subject to blowout due to pressure shock in the system which can damage the plates. Even despite best practice, leakage can occur.

- **Temperature**
  Higher operating temperatures cause more wear and tear on the gaskets. So do the temperature swings from hot to cold that are characteristic of dairy and other sanitary processes. Under these conditions, leakage may occur. Careful monitoring is key to early detection. Whenever cold leakage occurs, especially at startup, it is time to replace the gaskets.
- **Pressure**
  Higher pressure also causes more wear and tear on the gaskets. Therefore, processes operating at higher pressures generally require more frequent gasket replacement. That's why plate heat exchangers used to pasteurise beer, for example, require gasket replacement more often than those used for dairy pasteurisation.
- **Compression**
  Gaskets are subjected to local stress from the moment you first clip them on and tighten the plates. Subsequent opening and closing of any heat exchanger also puts undue stress on the gaskets, causing loss of elasticity and sealing ability. To prevent unnecessary wear, automatic cleaning procedures, such as cleaning in place (CIP), are recommended
- **Cleaning in place**
  Carefully monitor your cleaning process, as the composition of the cleaning solution can affect the rubber over time. Always use the cleaning solutions recommended by your gasket supplier as substitutes can harm the gaskets. Some cleaning solution suppliers, for instance, add ozone to the water, which degrades the rubber in gaskets used in sterilisation processes

Maintenance guidelines

- Perform integrity tests at regular intervals.
- Keep all heat exchanger documentation in a safe, easy-to-access location.
- Have the unit's serial number handy to assist your supplier when locating parts.
- Store spare gaskets in a sealed bag, in a dry, cold and dark place, and away from ozone-producing equipment as machinery or light armatures.
- If applicable, inspect Gemini doublewall plates each year as these plates are vital to the safety and integrity of your products.

Maintenance recommendations

- Keep detailed operation and maintenance records. Charting performance helps create a useful road map for maintenance and determining the right intervals for cleaning, thorough plate inspection and gasket replacement.
- Act, don't react. Reactive maintenance is always more expensive than proactive maintenance. Develop a maintenance schedule based on your records and stick to it.
- Monitor, monitor, monitor. Keep a watchful eye on your processes, especially at startup when cold leakage can occur, and use good judgment to determine when suspicious activity requires action.

The above guidelines may not apply in all working conditions. Please contact Alfa Laval for information relating to specific applications.

How to service Alfa Laval products in a correct and efficient way

360° service & maintenance videos

As part of the 360° Service Portfolio offering, 22 service & maintenance videos have been introduced, covering 5 core products. The service & maintenance videos have been created to enable you to service Alfa Laval products in a correct and efficient way

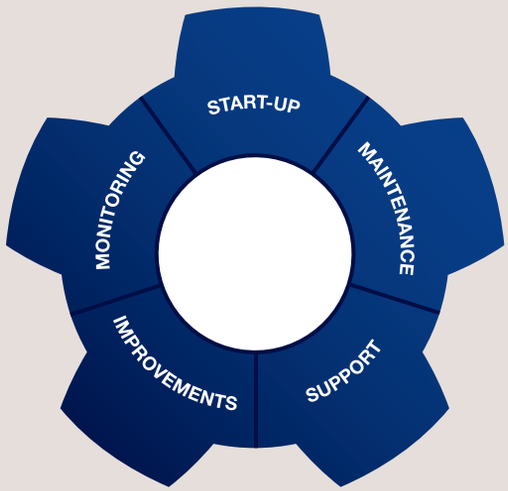

Features

The following features make the service & maintenance videos easy to work with:

- Short and informative - focus on vital service steps
- Clear demonstrations of how to use the different tools
- English speak
- Available on YouTube and Alfa Laval Anytime, our eBusiness

Alfa Laval YouTube channel

In Alfa Laval's YouTube channel, you can see videos about Alfa Laval in general and about our products in the food, dairy, beverage and pharma industries. Subscribe - and get notified when we upload a new video.

Products covered

- Alfa Laval FrontLine & BaseLine GPHE

Alfa Laval FrontLine & BaseLine GPHE – open and close

Alfa Laval FrontLine & BaseLine GPHE – change plates

Alfa Laval FrontLine & BaseLine GPHE – change gaskets

1.2 Gasketed Plate-and-Frame Heat Exchangers

Our Sanitary Heat Exchanger range is specially designed for pasteurizing and general cooling/heating of beverages, dairy, brewery and viscous products, as well as utilities.



Spare parts

ClipLine - Clip 3-RM 1.2.20
FrontLine - Front6-FRM 1.2.26
FrontLine - Front6-FRH 1.2.35
FrontLine - Front6-FRD 1.2.44
FrontLine - Front8-RM 1.2.52
FrontLine - Front8-RH 1.2.60
FrontLine - Front8-RD 1.2.68
FrontLine - Front10-RM 1.2.74
FrontLine - Front10-RH 1.2.82
FrontLine - Front10-RD 1.2.90
FrontLine - Front15-RH 1.2.98
FrontLine Automatic - Front10 Automatic 1.2.106
BaseLine - M3-Base 1.2.113
BaseLine - M6-Base 1.2.116
BaseLine - M10-Base 1.2.122
BaseLine - TL10-Base 1.2.128
M-Line - M6-FMC 1.2.134
M-Line - M6-FHC 1.2.140
M-Line - M10-FHC 1.2.146
M-Line - TS6-FMC 1.2.152

1.2 Gasketed Plate-and-Frame Heat Exchangers

Our Sanitary Heat Exchanger range is specially designed for pasteurizing and general cooling/heating of beverages, dairy, brewery and viscous products, as well as utilities.

Spare parts for obsolete products

Clip 6-RM, -RH 1.2.156
Clip 8-RM, -RH 1.2.162
Clip 10-RM, -RH 1.2.168
Front8-FRM 1.2.174
Front8-FRH 1.2.180
Front8-FRD 1.2.186
Front10-FRM 1.2.192
Front10-FRH 1.2.198
Front10-FRD 1.2.204
Fusion8-RM 1.2.209
Fusion8-RH 1.2.215
M6-MBASE 1.2.222
M10-BBase -MBase 1.2.230
M10-BFMC -MFMC 1.2.236
H7-RC 1.2.246
H7-FMC 1.2.250
H10-RC 1.2.254
H10-FMC 1.2.260
SNAP H7-RM 1.2.264

Gasket sheets

BaseLine - M3 . . . . . 1.2.269
BaseLine - M6 . . . . . 1.2.270
BaseLine - M6-M 1.2.271
BaseLine - M10-B 1.2.272
BaseLine - M10-M 1.2.273
BaseLine - TL10-B 1.2.274
BaseLine - TL10-P 1.2.275
M15-B 1.2.276
M15-M 1.2.277
ClipLine - Clip3 . . . . . 1.2.278
FrontLine - Clip6 & Clip6WS 1.2.279
FrontLine - Clip8 . . . . . 1.2.280
FrontLine - Clip8WS 1.2.281
FrontLine - Clip10 . . . . . 1.2.282
FrontLine - Clip15 . . . . . 1.2.283
TS6-M 1.2.284

1.2 Gasketed Plate-and-Frame Heat Exchangers

Our Sanitary Heat Exchanger range is specially designed for pasteurizing and general cooling/heating of beverages, dairy, brewery and viscous products, as well as utilities.

Gasket sheets for obsolete products

Fusion 8 . . . . . 1.2.285
M10–B/BD 1.2.286
M10–M 1.2.288
H7 . . . . . 1.2.292

Spare Parts Lists Clip 3 -RM

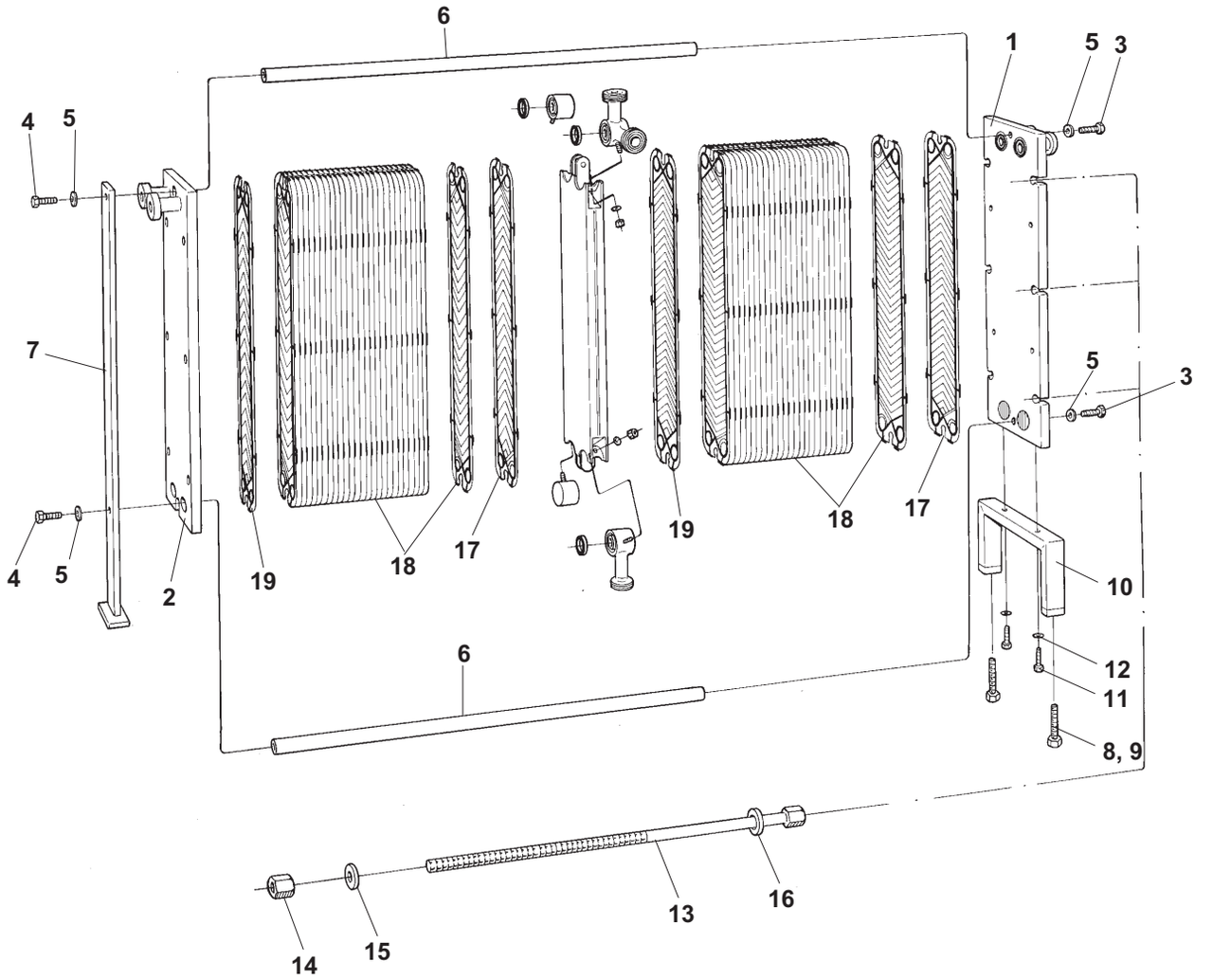

Clip3–RM, exploded view.
6

Frame components

Pos	*Denomination*	*AlfaLaval Part No*	*Specification*	*Comments*
1	Frame plate	1621650-01		CE
2	Pressure plate	1621651-01		CE
3	Screw	221046-06	ISO 4014 - M12 x 40 - A4-70	
4	Screw	221046-02	ISO 4017 - M12 x 25 - A4-70	
5	Washer	223101-35	BRB 13 x 24 - 2343	
6	Carrying/guiding bar	1623415-01	L=380	
		1623415-02	L=490	
		1623415-03	L=670	
		1623415-04	L=900	
		1623415-05	L=1230	
		1623415-06	L=SPEC	
7	Support column	1627383-01		
8	Screw	221046-32	ISO 4017 - M12 x 50 - A4-70	For adjustable foot
9	Nut	221803-22	ISO 4032 - M12 - A4-70	For adjustable foot
10	Foot	1627386-01		
		1627379-01	Adjustable	
11	Screw	221041-19	ISO 4017 - M10 x 16 - A4-70	
12	Washer	223101-61	BRB 10.5 x 22 - 2343	
13	Tightening bolt	1624445-02	M16, L=330	CE
		1624445-03	M16, L=480	CE
		1624445-04	M16, L=630	CE
		1624445-05	M16, L=780	CE
		1624445-10	M16, L=1180	CE
		1624445-11	M16, L=SPEC	CE
14	Nut	1641665-01	M16, L=30	CE
15	Guide washer	1624295-01	M16	
16	Wearing washer	223101-37	BRB 17 x 30 - 2343	
17	End plate I			
18	Channel plates			
19	End plate II			
	Ratchet spanner	32220-3100-6	M16, NV24	Assembling tool
	Protection sheet		Available for the Plate Heat Exchanger, contact your local Alfa Laval Representative for more information on how to order.	

Connections

Connections in frame plate and pressure plate

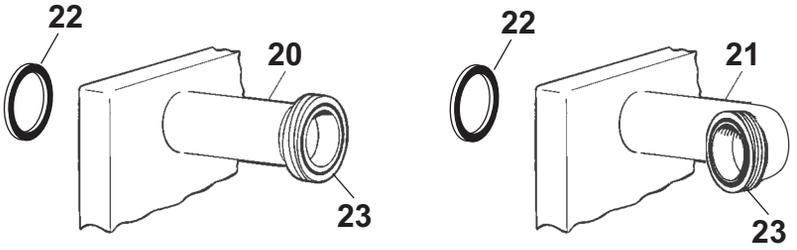

Drawing of connections in frame plate and pressure plate

Pos	Denomination	AlfaLaval Part No	Specification	Comments
20	Pipe, Ø25	1626001-01		CE For frame plate
		1626001-04		CE For frame plate, 3-A sanitary std
		3350013341		CE For pressure plate
		3350013343		CE For pressure plate, 3-A sanitary std
21	Pipe, Ø25	1626001-03	Curved	CE For frame plate
		1626001-05	Curved	CE For frame plate, 3-A sanitary std
		3350013342	Curved	CE For pressure plate
		3350013344	Curved	CE For pressure plate, 3-A sanitary std
22	Gasket ring	1629584-01	NBR	For frame plate
		1629584-02	EPDM	For frame plate
		1629584-03	HT-NBR	For frame plate
23	Fitting	1644793-01	SMS 25 MALE PART	CE
		1644796-01	DIN 25 MALE PART	CE
		1644799-01	IDF 25 MALE PART	CE
		1644802-01	RJT 25 MALE PART	CE
		1644805-01	CLAMP 25 NIPPLE	CE

Connections in connection plate

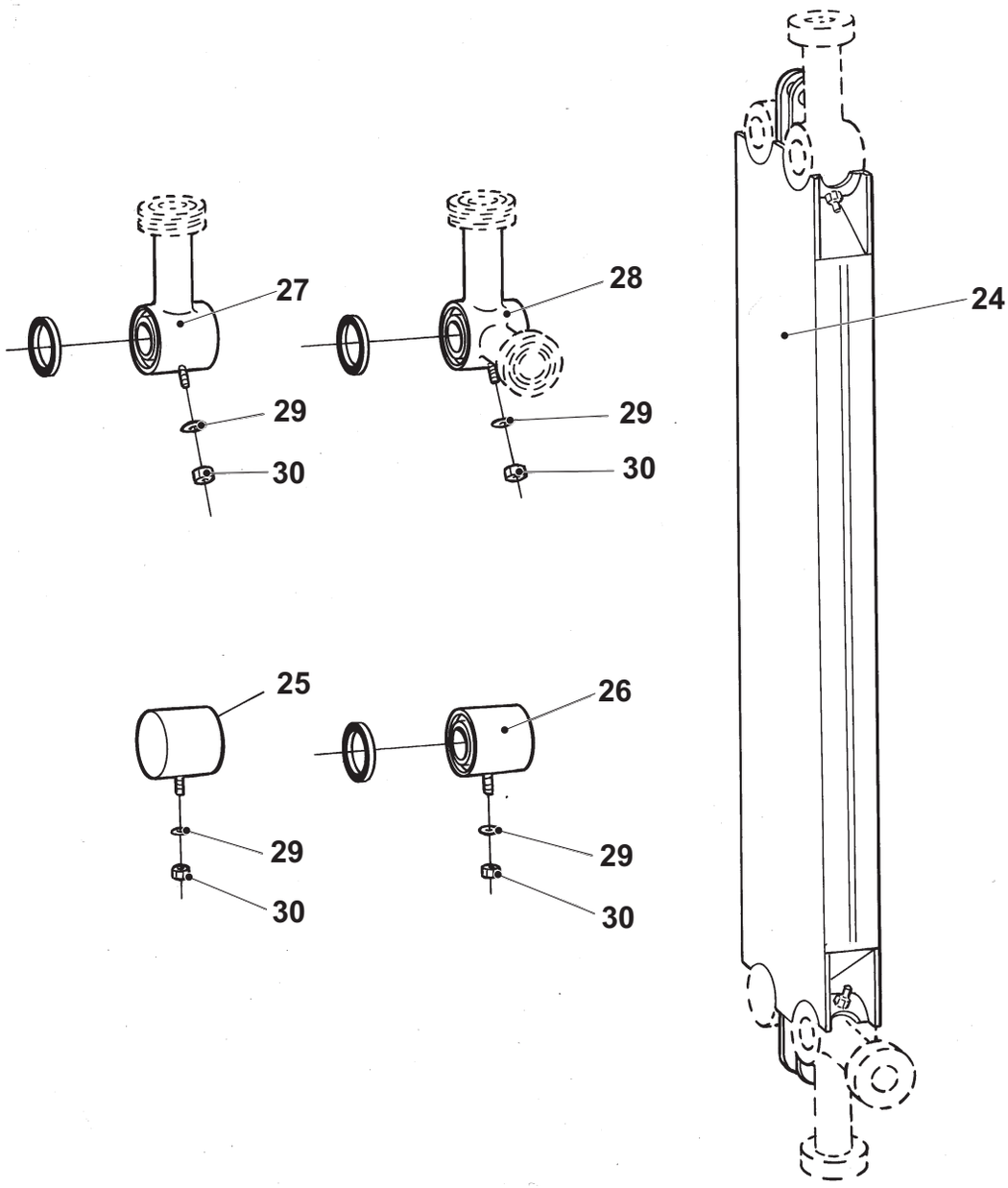

Drawing of connection plate corners.

Pos	Denomination	AlfaLaval Part No	Specification	Comments
24	Connection plate	1621654-01		CE
25	Blind corner	1625980-01		CE
26	Through passage	1625979-01		CE
		1625979-02		CE 3-A sanitary std
27	Single corner	1625963-01	Horizontal position A-2,A-4 if bottom towards frame plate, otherwise A-1,A-3	CE
		1625987-01	Horizontal position A-2,A-4 if bottom towards frame plate, otherwise A-1,A-3	CE 3-A sanitary std
		1625963-02	Vertical position A-2,A-4 if bottom towards frame plate, otherwise A-1,A-3	CE
		1625987-02	Vertical position A-2,A-4 if bottom towards frame plate, otherwise A-1,A-3	CE 3-A sanitary std
		1625963-03	Vertical position A-1,A-3 if bottom towards frame plate, otherwise A-2,A-4	CE
		1625987-03	Vertical position A-1,A-3 if bottom towards frame plate, otherwise A-2,A-4	CE 3-A sanitary std
		1625963-04	Horizontal position A-1,A-3 if bottom towards frame plate, otherwise A-2,A-4	CE
		1625987-04	Horizontal position A-1,A-3 if bottom towards frame plate, otherwise A-2,A-4	CE 3-A sanitary std
28	Double corner	1625967-01	Position A-2 , A-4	CE
		1625988-01	Position A-2 , A-4	CE 3-A sanitary std
		1625967-02	Position A-1 , A-3	CE
		1625988-02	Position A-1 , A-3	CE 3-A sanitary std
29	Washer	223101-32	BRB 6.4 x 12 - 2343	
30	Nut	221803-28	ISO 4032 - M6 - A4-70	
	Gasket ring		Same as for FP and PP, see above.	
	Fitting		Same as for FP and PP, see above.	

Blind connection

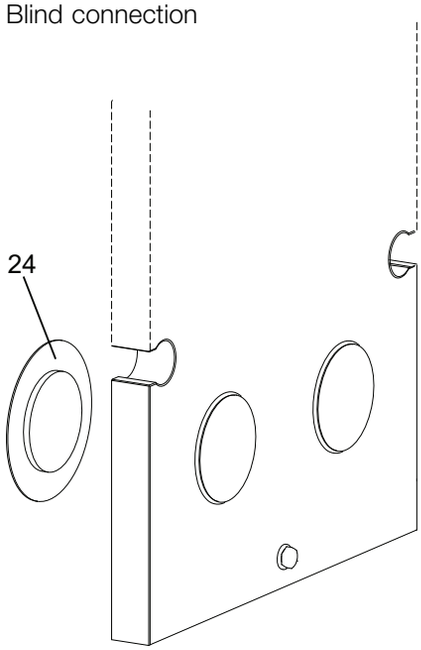

Drawing of blind connection.

Pos	*Denomination*	*AlfaLaval Part No*	*Specification*	*Comments*
31	Blind cover	1625989-01		CE

Spare Parts Lists Front 6 FRM-

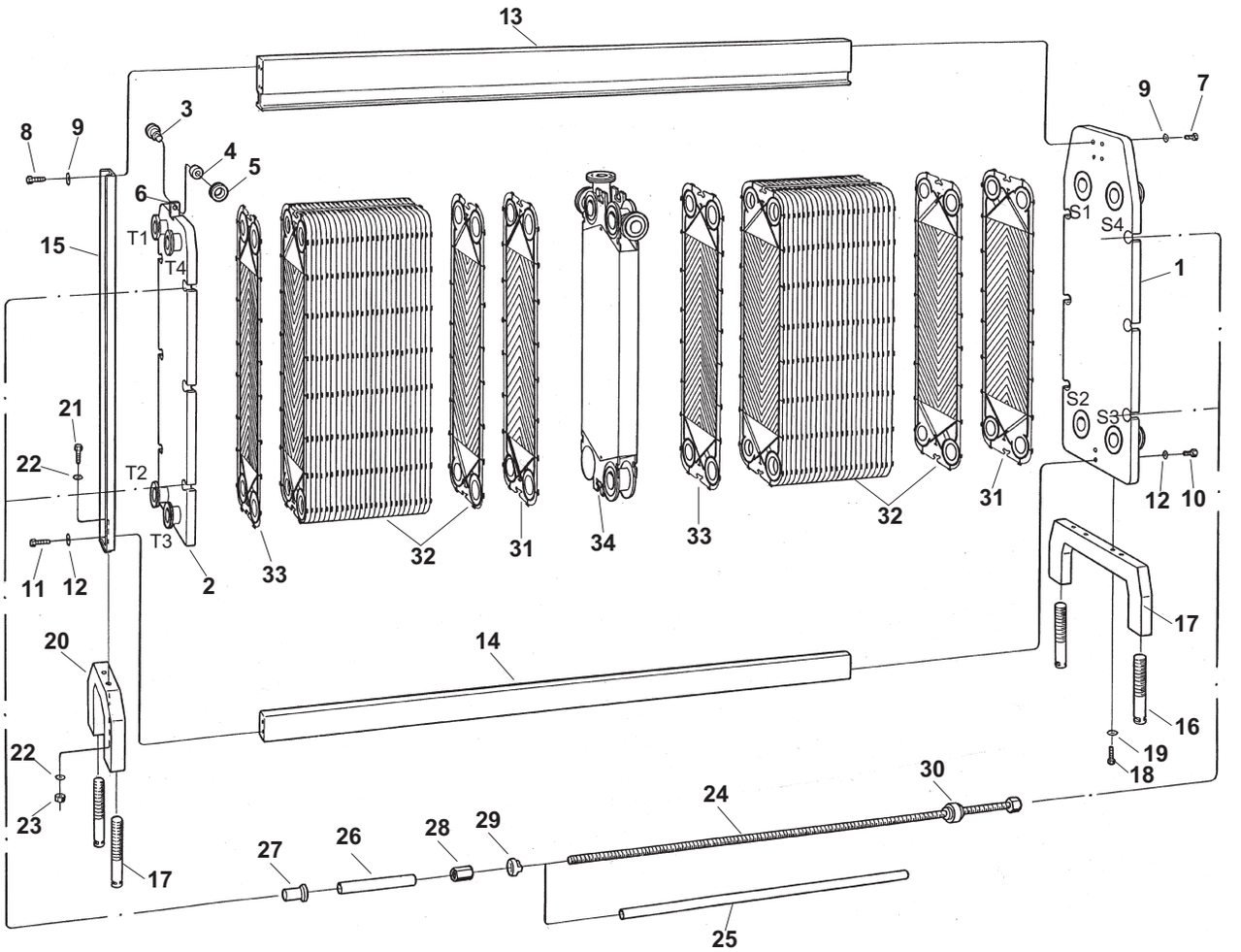

Exploded view of Front 6-FRM.
14

Frame components

Pos	Denomination	AlfaLaval Part No	Specification	Comments
1	Frame plate	3350024208	4-holed	CE
		3350024209	3-holed S1 S2 S3	CE
		3350024210	3-holed S2 S3 S4	CE
		3350024211	3-holed S1 S3 S4	CE
		3350024212	3-holed S1 S2 S4	CE
		3350024213	2-holed S1 S2	CE
		3350024214	2-holed S1 S3	CE
		3350024215	2-holed S1 S4	CE
		3350024216	2-holed S2 S3	CE
		3350024217	2-holed S2 S4	CE
		3350024218	2-holed S3 S4	CE
		3350024219	1-holed S1	CE
		3350024220	1-holed S2	CE
		3350024221	1-holed S3	CE
		3350024222	1-holed S4	CE
		3350024223	Unholed	CE
2	Pressure plate	3350024696	4-holed	CE
		3350024697	3-holed T1 T2 T3	CE
		3350024698	3-holed T2 T3 T4	CE
		3350024699	3-holed T1 T3 T4	CE
		3350024700	3-holed T1 T2 T4	CE
		3350024701	2-holed T1 T2	CE
		3350024702	2-holed T1 T3	CE
		3350024703	2-holed T1 T4	CE
		3350024704	2-holed T2 T3	CE
		3350024705	2-holed T2 T4	CE
		3350024706	2-holed T3 T4	CE
		3350024707	1-holed T1	CE
		3350024708	1-holed T2	CE
		3350024709	1-holed T3	CE
		3350024710	1-holed T4	CE
		3350024711	Unholed	CE
3	Shaft	1620780–01		
4	Needle bearing	528402–03	Brand: INA Type: Needle roller bearing NKI 20/16-XL	
5	Wheel	1620781–01		
6	Stop screw	260080–04	SK6SS 6x8	
7	Screw	221046-04	ISO 4014 - M12 x 50 - A4-70	
8	Screw	221046–02	M6S M12x25	
9	Washer	223101–35	BRB 13x24	
10	Screw	221041–06	M6S M10x50	
11	Screw	221041–01	M6S M10x30	
12	Washer	223101–61	BRB 10.5x22	
13	Carrying bar	1623261-01	L=900	
		1623261-02	L=1200	
		1623261-03	L=1500	
		1623261-04	L=1800	
		1623261-07	L=2100	
		1623261-05	L=2400	
		1623261-06	L=SPEC.	
14	Guiding bar	1623416-01	L=900	
		1623416-02	L=1200	
		1623416-03	L=1500	
		1623416-04	L=1800	
		1623416-07	L=2100	
		1623416-05	L=2400	
		1623416-06	L=SPEC.	
15	Support column	1640390-01		
16	Levelling screw	1640848-01	M30, L=200	
17	Foot	1640543-01	Low	
		1641164-01	High	
18	Screw	2210463–01	M6S 16x25	
19	Washer	223101–37	BRB 17x30	
20	Foot	1640546-01	Low	
		1641166-01	High	
21	Screw	2210463-03	M6S 16x40	
22	Washer	223101-37	BRB 17x30	
23	Nut	221803-40	M12	
24	Tightening bolt	1640815-02	M24, L=860	CE
		1640815-03	M24, L=1160	CE
		1640815-04	M24, L=1460	CE
		1640815-05	M24, L=1760	CE
		1640815-06	M24, L=2060	CE
		1640815-07	M24, L=2360	CE
		1640815-10	M24, L=SPEC.	CE

25	Protecting tube	1641357-02	L=708	For M24 bolt
		1641357-03	L=1008	For M24 bolt
		1641357-04	L=1308	For M24 bolt
		1641357-05	L=1608	For M24 bolt
		1641357-06	L=1908	For M24 bolt
		1641357-07	L=2208	For M24 bolt
		1641357-10	L=SPEC.	For M24 bolt
26	Plastic tube	1995-101-096	ID=22	
27	Cap	1641360-03	M24	
28	Nut	1641667-01	M24	CE
29	Lock washer	1640840-01		
30	Bearing box	1624183-01	M24	
31	End plate I			
32	Channel plates			
33	End plate II			
34	Connection plate	3350001046		CE
	Ratchet spanner	32220-3101-6	NV36/M24	Assembling tool
	Protecting sheet		Available for the Plate Heat Exchanger, contact your local Alfa Laval Representative for more information on how to order.	
		3350000635	Sign	For protecting sheet.

Connections

Connections in frame plate and pressure plate, Ø 51 mm

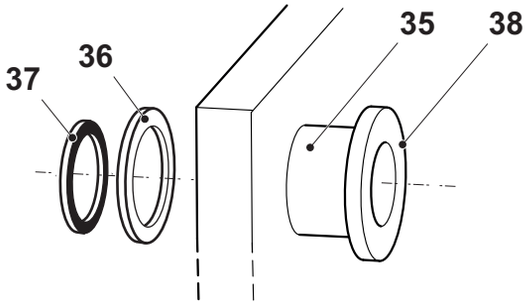

Drawing of connections, Ø 51 mm

Pos	Denomination	AlfaLaval Part No	Specification	Comments
35	Pipe	1625416-01		CE
		1625416-02		CE 3-A sanitary std
		3350026313	Alloy 254	CE
		3350026314	Alloy 254	CE 3-A sanitary std
36	Welding ring	1640498-01		CE Valid for frame plate
		3350026312	Alloy 254	CE Valid for frame plate
		1640499-01		CE Valid for pressure plate
		3350026317	Alloy 254	CE Valid for pressure plate
37	Gasket ring	34505262-01	NBRFF	Valid for frame plate
		34505262-02	EPDMFF	Valid for frame plate
38	Fitting	1644793-03	SMS 51 MALE PART	CE
		1644796-03	DIN 51 MALE PART	CE
		1644799-03	IDF 51 MALE PART	CE
		1644802-03	RJT 51 MALE PART	CE
		1644805-03	CLAMP 51 NIPPLE	CE
		3350026208	Alloy 254, SMS 51 MALE PART	CE
		3350026212	Alloy 254, DIN 51 MALE PART	CE
		3350026218	Alloy 254, CLAMP 51 NIPPLE	CE

Connections in frame plate and pressure plate, DN50

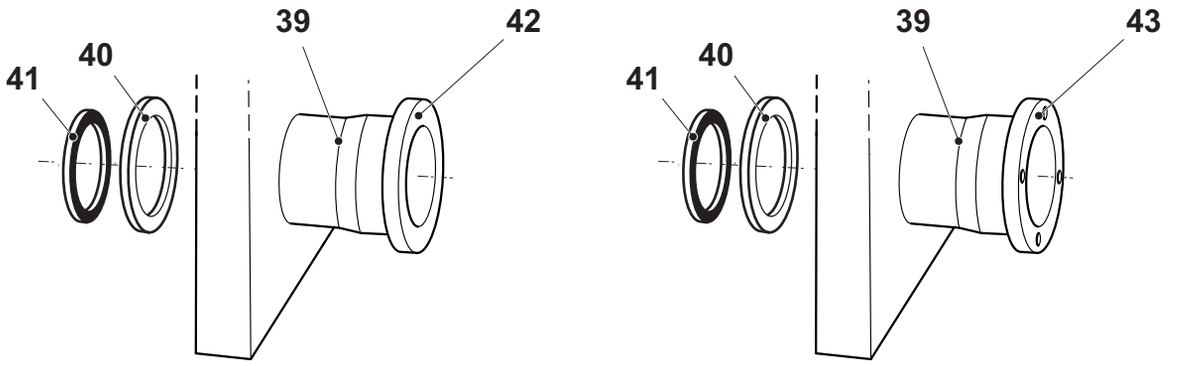

Drawing of connections, DN50

Pos	*Denomination*	*AlfaLaval Part No*	*Specification*	*Comments*
39	Pipe	34504405-01	Expansion Ø51 • DN50	CE
		34504405-02	Expansion Ø51 • DN50	CE 3-A sanitary std
		3350026315	Alloy 254, Expansion Ø51 • DN50	CE
		3350026316	Alloy 254, Expansion Ø51 • DN50	CE 3-A sanitary std
40	Welding ring	1640498-01		CE Valid for frame plate
		3350026312	Alloy 254	CE Valid for frame plate
		1640499-01		CE Valid for pressure plate
		3350026317	Alloy 254	CE Valid for pressure plate
41	Gasket ring	34505262-01	NBRFF	Valid for frame plate
		34505262-02	EPDMFF	Valid for frame plate
42	Fitting	34503625-01	DIN 11864-1 DN50	CE
43	Flange	1626363-01	DIN DN50 PN16	CE
		1626363-06	DIN DN50 PN25	CE
		3350017920	DIN 11864-2 DN50	CE
		3350018009	FG1 PN10 DN50	CE
		3350018005	FN1 PN10 DN50	CE
		3350026254	Alloy 254, DIN 11864-2 DN50	CE

Connections in connection plate

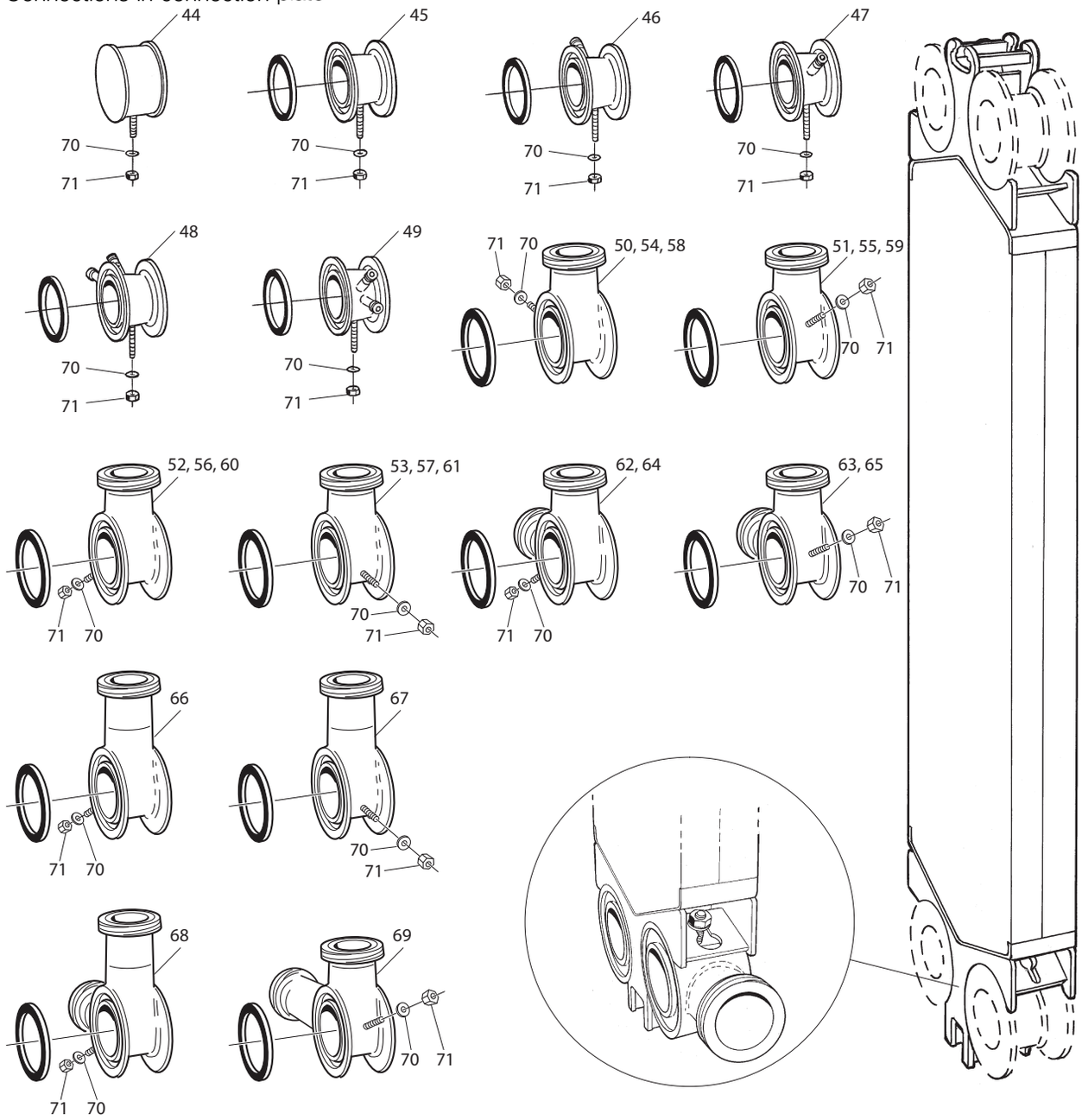

Drawing of connection plate corners.

Pos	Denomination	AlfaLaval Part No	Specification	Comments
44	Blind corner	1625417-01		CE
45	Through passage	1625435-03		CE
		1625435-04		CE 3-A sanitary std
		3350026319	Alloy 254	CE
		3350026320	Alloy 254	CE 3-A sanitary std
46	Through passage with dive tube	1641244-02	Position A-1,A-3	CE
47	Through passage with dive tube	1641244-01	Position A-2,A-4	CE
48	Through passage with dive tube and nib	1641245-02	Position A-1,A-3	CE
49	Through passage with dive tube and nib	1641245-01	Position A-2,A-4	CE
50	Single corner through passage	1641246-04	Horizontal position A-1,A-3	CE
		1641246-08	Horizontal position A-1,A-3	CE 3-A sanitary std
		3350026340	Alloy 254, Horizontal position A-1,A-3	CE
51	Single corner through passage	1641246-01	Horizontal position A-2,A-4	CE
		1641246-05	Horizontal position A-2,A-4	CE 3-A sanitary std
		3350026337	Alloy 254, Horizontal position A-2,A-4	CE
52	Single corner through passage	1641246-03	Vertical position A-1,A-3	CE
		1641246-07	Vertical position A-1,A-3	CE 3-A sanitary std
		3350026339	Alloy 254, Vertical position A-1,A-3	CE
53	Single corner through passage	1641246-02	Vertical position A-2,A-4	CE
		1641246-06	Vertical position A-2,A-4	CE 3-A sanitary std
		3350026338	Alloy 254, Vertical position A-2,A-4	CE
54	Single corner	1641233-04	Horizontal position A-1,A-3 if bottom towards frame plate, otherwise A-2,A-4	CE
		1641233-08	Horizontal position A-1,A-3 if bottom towards frame plate, otherwise A-2,A-4	CE 3-A sanitary std
		3350026325	Alloy 254, Horizontal position A-1,A-3 if bottom towards frame plate, otherwise A-2,A-4	CE
		3350026329	Alloy 254, Horizontal position A-1,A-3 if bottom towards frame plate, otherwise A-2,A-4	CE 3-A sanitary std
55	Single corner	1641233-01	Horizontal position A-2,A-4 if bottom towards frame plate, otherwise A-1,A-3	CE
		1641233-05	Horizontal position A-2,A-4 if bottom towards frame plate, otherwise A-1,A-3	CE 3-A sanitary std
		3350026322	Alloy 254, Horizontal position A-2,A-4 if bottom towards frame plate, otherwise A-1,A-3	CE
		3350026326	Alloy 254, Horizontal position A-2,A-4 if bottom towards frame plate, otherwise A-1,A-3	CE 3-A sanitary std
56	Single corner	1641233-03	Vertical position A-1,A-3 if bottom towards frame plate, otherwise A-2,A-4	CE
		1641233-07	Vertical position A-1,A-3 if bottom towards frame plate, otherwise A-2,A-4	CE 3-A sanitary std
		3350026324	Alloy 254, Vertical position A-1,A-3 if bottom towards frame plate, otherwise A-2,A-4	CE
		3350026328	Alloy 254, Vertical position A-1,A-3 if bottom towards frame plate, otherwise A-2,A-4	CE 3-A sanitary std
57	Single corner	1641233-02	Vertical position A-2,A-4 if bottom towards frame plate, otherwise A-1,A-3	CE
		1641233-06	Vertical position A-2,A-4 if bottom towards frame plate, otherwise A-1,A-3	CE 3-A sanitary std
		3350026323	Alloy 254, Vertical position A-2,A-4 if bottom towards frame plate, otherwise A-1,A-3	CE
		3350026327	Alloy 254, Vertical position A-2,A-4 if bottom towards frame plate, otherwise A-1,A-3	CE 3-A sanitary std
58	Single corner, DN50	34504406-04	Horizontal position A-1,A-3 if bottom towards frame plate, otherwise A-2,A-4	CE
		34504406-08	Horizontal position A-1,A-3 if bottom towards frame plate, otherwise A-2,A-4	CE 3-A sanitary std
		3350026345	Alloy 254, Horizontal position A-1,A-3 if bottom towards frame plate, otherwise A-2,A-4	CE
		3350026349	Alloy 254, Horizontal position A-1,A-3 if bottom towards frame plate, otherwise A-2,A-4	CE 3-A sanitary std
59	Single corner, DN50	34504406-01	Horizontal position A-2,A-4 if bottom towards frame plate, otherwise A-1,A-3	CE
		34504406-05	Horizontal position A-2,A-4 if bottom towards frame plate, otherwise A-1,A-3	CE 3-A sanitary std
		3350026342	Alloy 254, Horizontal position A-2,A-4 if bottom towards frame plate, otherwise A-1,A-3	CE
		3350026346	Alloy 254, Horizontal position A-2,A-4 if bottom towards frame plate, otherwise A-1,A-3	CE 3-A sanitary std
60	Single corner, DN50	34504406-03	Vertical position A-1,A-3 if bottom towards frame plate, otherwise A-2,A-4	CE
		34504406-07	Vertical position A-1,A-3 if bottom towards frame plate, otherwise A-2,A-4	CE 3-A sanitary std
		3350026344	Alloy 254, Vertical position A-1,A-3 if bottom towards frame plate, otherwise A-2,A-4	CE

		3350026348	Alloy 254, Vertical position A-1,A-3 if bottom towards frame plate, otherwise A-2,A-4	CE 3-A sanitary std
61	Single corner, DN50	34504406-02	Vertical position A-2,A-4 if bottom towards frame plate, otherwise A-1,A-3	CE
		34504406-06	Vertical position A-2,A-4 if bottom towards frame plate, otherwise A-1,A-3	CE 3-A sanitary std
		3350026343	Alloy 254, Vertical position A-2,A-4 if bottom towards frame plate, otherwise A-1,A-3	CE
		3350026347	Alloy 254, Vertical position A-2,A-4 if bottom towards frame plate, otherwise A-1,A-3	CE 3-A sanitary std
62	Double corner	1641234-02	Position A-1,A-3	CE
		1641234-04	Position A-1,A-3	CE 3-A sanitary std
		3350026333	Alloy 254, Position A-1,A-3	CE
		3350026335	Alloy 254, Position A-1,A-3	CE 3-A sanitary std
63	Double corner	1641234-01	Position A-2,A-4	CE
		1641234-03	Position A-2,A-4	CE 3-A sanitary std
		3350026332	Alloy 254, Position A-2,A-4	CE
		3350026334	Alloy 254, Position A-2,A-4	CE 3-A sanitary std
64	Double corner, DN50	34504407-02	Position A-1,A-3	CE
		34504407-04	Position A-1,A-3	CE 3-A sanitary std
		3350026363	Alloy 254, Position A-1,A-3	CE
		3350026365	Alloy 254, Position A-1,A-3	CE 3-A sanitary std
65	Double corner, DN50	34504407-01	Position A-2,A-4	CE
		34504407-03	Position A-2,A-4	CE 3-A sanitary std
		3350026362	Alloy 254, Position A-2,A-4	CE
		3350026364	Alloy 254, Position A-2,A-4	CE 3-A sanitary std
66	Single corner, DN50	34504406-10	(Extended) vertical position A-1 if bottom towards frame plate, otherwise A-4	CE
		3350026351	Alloy 254, (Extended) vertical position A-1 if bottom towards frame plate, otherwise A-4	CE
67	Single corner, DN50	34504406-09	(Extended) vertical position A-4 if bottom towards frame plate, otherwise A-1	CE
		3350026350	Alloy 254, (Extended) vertical position A-4 if bottom towards frame plate, otherwise A-1	CE
68	Double corner, DN50	3490014387-02	(Extended) position A1	CE
		3350026381	Alloy 254, (Extended) position A1	CE
69	Double corner, DN50	3490014387-01	(Extended) position A4	CE
		3350026382	Alloy 254, (Extended) position A4	CE
70	Washer	223101-61	BRB 10.5x22	
71	Nut	221803-29	M10	
	Gasket ring		Same as for FP and PP, see above.	
	Fitting		Same as for FP and PP, see above.	
	Flange		Same as for FP and PP, see above.	

Blind connection

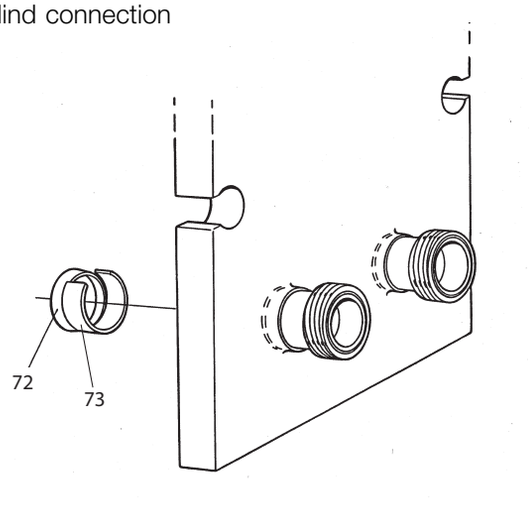

Drawing of blind connection.

Pos	*Denomination*	*AlfaLaval Part No*	*Specification*	*Comments*
72	Blind cover	1625418-03 1644951-01		CE For connection with connection pipe CE For connection without connection pipe
73	Spring	1625434-01		CE For connection with connection pipe

Spare Parts Lists Front 6 FRH-

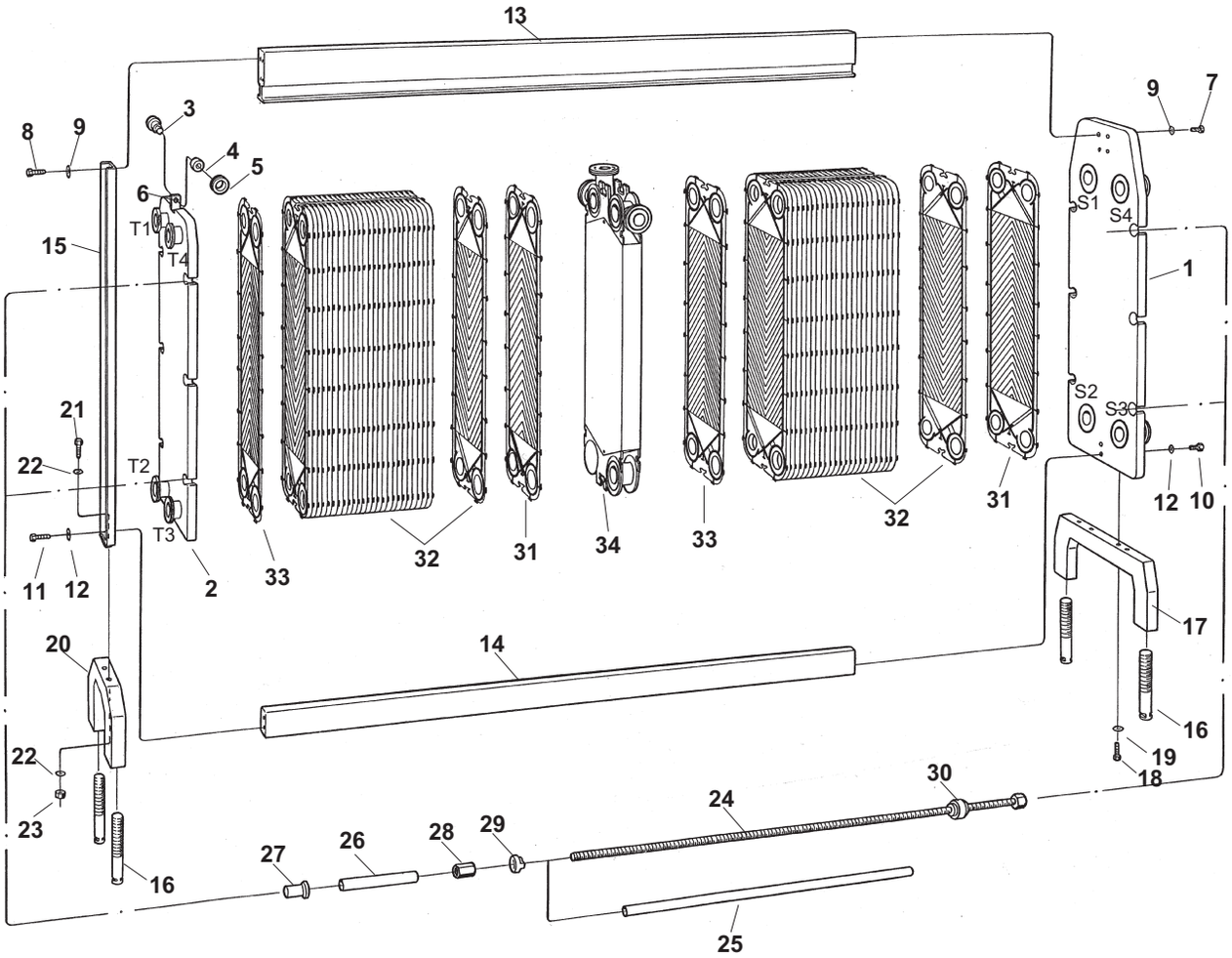

Exploded view of Front 6-FRH.
12

Frame components

Pos	Denomination	AlfaLaval Part No	Specification	Comments
1	Frame plate	3350024208	4-holed	CE
		3350024209	3-holed S1 S2 S3	CE
		3350024210	3-holed S2 S3 S4	CE
		3350024211	3-holed S1 S3 S4	CE
		3350024212	3-holed S1 S2 S4	CE
		3350024213	2-holed S1 S2	CE
		3350024214	2-holed S1 S3	CE
		3350024215	2-holed S1 S4	CE
		3350024216	2-holed S2 S3	CE
		3350024217	2-holed S2 S4	CE
		3350024218	2-holed S3 S4	CE
		3350024219	1-holed S1	CE
		3350024220	1-holed S2	CE
		3350024221	1-holed S3	CE
		3350024222	1-holed S4	CE
		3350024223	Unholed	CE
2	Pressure plate	3350024696	4-holed	CE
		3350024697	3-holed T1 T2 T3	CE
		3350024698	3-holed T2 T3 T4	CE
		3350024699	3-holed T1 T3 T4	CE
		3350024700	3-holed T1 T2 T4	CE
		3350024701	2-holed T1 T2	CE
		3350024702	2-holed T1 T3	CE
		3350024703	2-holed T1 T4	CE
		3350024704	2-holed T2 T3	CE
		3350024705	2-holed T2 T4	CE
		3350024706	2-holed T3 T4	CE
		3350024707	1-holed T1	CE
		3350024708	1-holed T2	CE
		3350024709	1-holed T3	CE
		3350024710	1-holed T4	CE
		3350024711	Unholed	CE
3	Shaft	1620780-01		
4	Needle bearing	528402-03	Brand: INA Type: Needle roller bearing NKI 20/16-XL	
5	Wheel	1620781-01		
6	Stop screw	260080-04	SK6SS 6x8	
7	Screw	221046-04	M6S M12x50	
8	Screw	221046-02	M6S M12x25	
9	Washer	223101-35	BRB 13x24	
10	Screw	221041-06	M10x50	
11	Screw	221041-01	M10x30	
12	Washer	223101-61	BRB 10.5x22	
13	Carrying bar	1623261-01	L=900	
		1623261-02	L=1200	
		1623261-03	L=1500	
		1623261-04	L=1800	
		1623261-07	L=2100	
		1623261-05	L=2400	
		1623261-06	L=SPEC.	
14	Guiding bar	1623416-01	L=900	
		1623416-02	L=1200	
		1623416-03	L=1500	
		1623416-04	L=1800	
		1623416-07	L=2100	
		1623416-05	L=2400	
		1623416-06	L=SPEC.	
15	Supporting column	1640390-01		
		3350029876		3-A sanitary std
16	Levelling screw	1640848-01	M30, L=200	
17	Foot	1640543-01	Low	
		1641164-01	High	
		3350029795	Low	3-A sanitary std
		3350029783	High	3-A sanitary std
18	Screw	2210463-01	M6S 16x25	
		2210463-43	ISO 4014 - M16 x 85 - A4-70	Valid for 3-A sanitary std
19	Washer	223101-37	BRB 17 x 30 - 2343	
20	Foot	1640546-01	Low	
		1641166-01	High	
		3350029791	Low	3-A sanitary std
		3350029775	High	3-A sanitary std
21	Screw	221046-03	ISO 4017 - M12 x 30 - A4-70	
		2210463-43	ISO 4014 - M16 x 85 - A4-70	Valid for 3-A sanitary std
22	Washer	223101-35	BRB 13 x 24 - 2343	
		223101-37	BRB 17 x 30 - 2343	Valid for 3-A sanitary std
23	Nut	221803-22	ISO 4032 - M12 - A4-70	
		221803-40	ISO 4032 - M16 - A4-70	Valid for 3-A sanitary std

24	Tightening bolt	1640815-02	M24, L=860	CE
		1640815-03	M24, L=1160	CE
		1640815-04	M24, L=1460	CE
		1640815-05	M24, L=1760	CE
		1640815-06	M24, L=2060	CE
		1640815-07	M24, L=2360	CE
		1640815-10	M24, L=SPEC.	CE
25	Protecting tube	1641357-02	L=708	For M24 bolts
		1641357-03	L=1008	For M24 bolts
		1641357-04	L=1308	For M24 bolts
		1641357-05	L=1608	For M24 bolts
		1641357-06	L=1908	For M24 bolts
		1641357-07	L=2208	For M24 bolts
		1641357-10	L=SPEC.	For M24 bolts
26	Plastic tube	1995-101-086	ID=26	
27	Cap	1641360-03	M24	
28	Nut	1641667-01	M24	CE
29	Lock washer	1640840-01		
30	Bearing box	1624183-01	M24	
31	End plate I			
32	Channel plates			
33	End plate II			
34	Connection plate	3350001046		CE
	Ratchet spanner	32220-3101-6	NV36/M24	Assembling tool
	Protecting sheet		Available for the Plate Heat Exchanger, contact your local Alfa Laval Representative for more information on how to order.	
		3350000635	Sign	For protecting sheet.

Connections

Connections in frame plate and pressure plate, Ø51

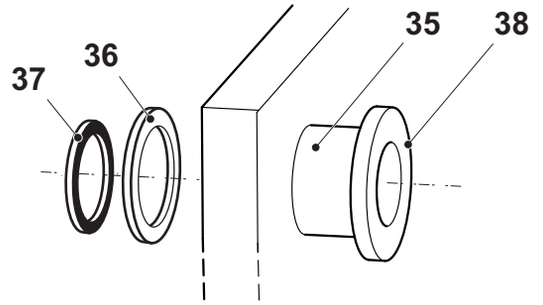

Drawing of connections, Ø51

Pos	Denomination	AlfaLaval Part No	Specification	Comments
35	Pipe	1625416-01		CE
		1625416-02		CE 3-A sanitary std
		3350026313	Alloy 254	CE
		3350026314	Alloy 254	CE 3-A sanitary std
36	Welding ring	1640498-01		CE Valid for frame plate
		3350026312	Alloy 254	CE Valid for frame plate
		1640499-01		CE Valid for pressure plate
		3350026317	Alloy 254	CE Valid for pressure plate
37	Gasket ring	34505262-01	NBRFF	Valid for frame plate
		34505262-02	EPDMFF	Valid for frame plate
38	Fitting	1644793-03	SMS 51 MALE PART	CE
		1644796-03	DIN 51 MALE PART	CE
		1644799-03	IDF 51 MALE PART	CE
		1644802-03	RJT 51 MALE PART	CE
		1644805-03	CLAMP 51 NIPPLE	CE
		3350026208	Alloy 254, SMS 51 MALE PART	CE
		3350026212	Alloy 254, DIN 51 MALE PART	CE
		3350026218	Alloy 254, CLAMP 51 NIPPLE	CE

Connections in frame plate and pressure plate, DN50

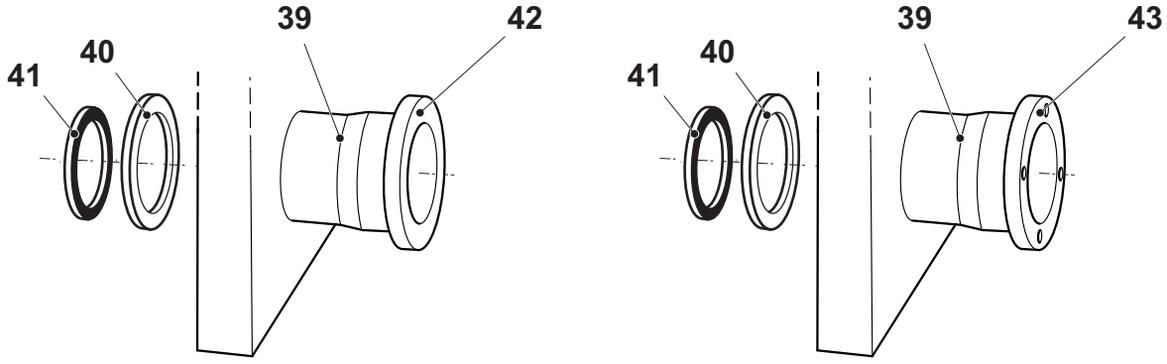

Drawing of connections, DN50

Pos	*Denomination*	*AlfaLaval Part No*	*Specification*	*Comments*
39	Pipe	34504405-01		CE
		34504405-02		CE 3-A sanitary std
		3350026315	Alloy 254	CE
		3350026316	Alloy 254	CE 3-A sanitary std
40	Welding ring	1640498-01		CE Valid for frame plate
		3350026312	Alloy 254	CE Valid for frame plate
		1640499-01		CE Valid for pressure plate
		3350026317	Alloy 254	CE Valid for pressure plate
41	Gasket ring	34505262-01	NBRFF	Valid for frame plate
		34505262-02	EPDMFF	Valid for frame plate
42	Fitting	34503625-01	DIN 11864-1 DN50	CE
43	Flange	1626363-01	DIN DN50/PN16	CE
		1626363-06	DIN DN50/PN25	CE
		3350017920	DIN 11864-2 DN50	CE
		3350026254	Alloy 254, DIN 11864-2 DN50	CE

Connections in connection plate

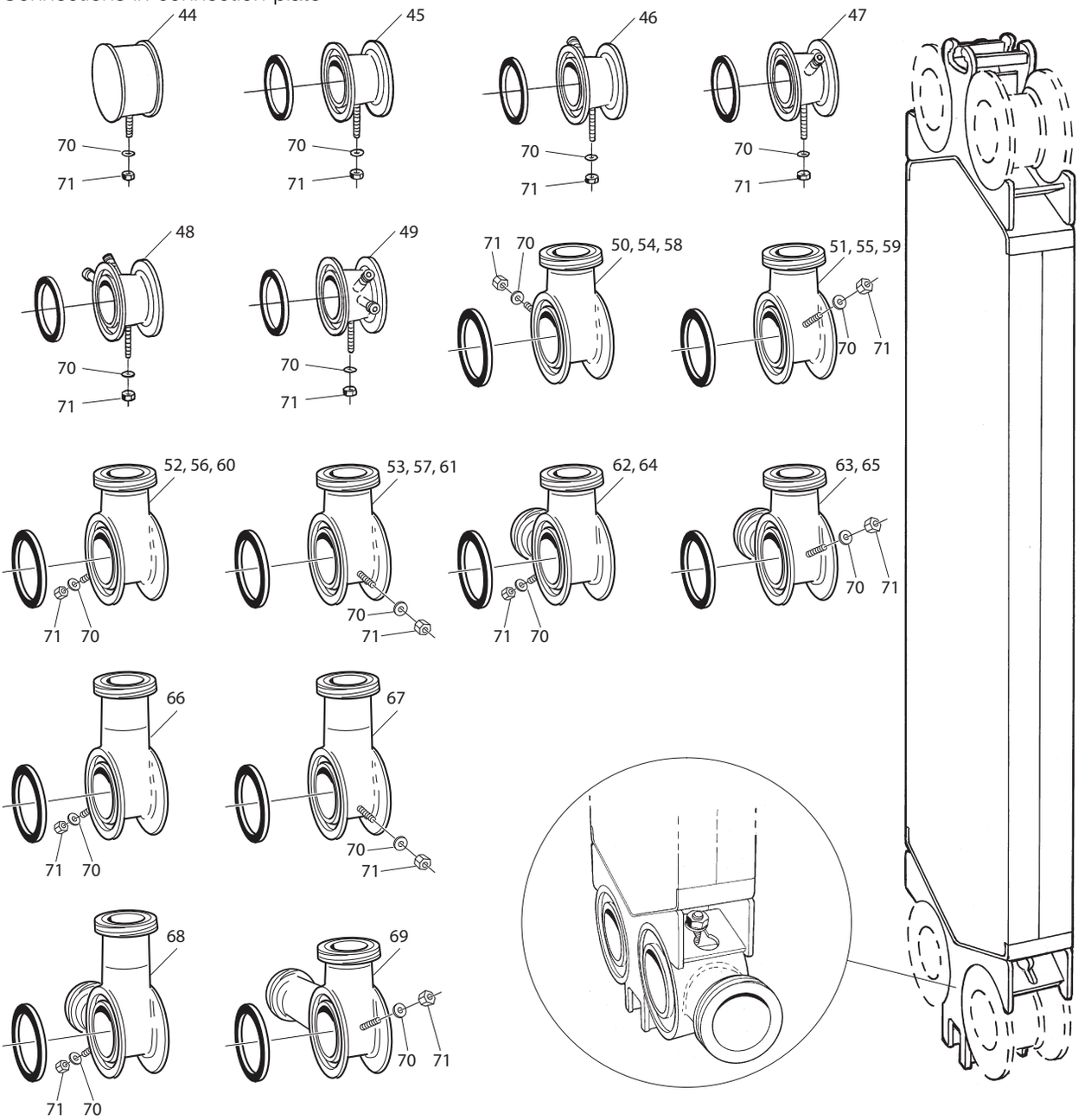

Drawing of connection plate corners.

Pos	Denomination	AlfaLaval Part No	Specification	Comments
44	Blind corner	1625417-01		CE
45	Through passage	1625435-03		CE
		1625435-04		CE 3-A sanitary std
		3350026319	Alloy 254	CE
		3350026320	Alloy 254	CE 3-A sanitary std
46	Through passage with dive tube	1641244-02	Position A-1,A-3	CE
47	Through passage with dive tube	1641244-01	Position A-2,A-4	CE
48	Through passage with dive tube and nib	1641245-02	Position A-1,A-3	CE
49	Through passage with dive tube and nib	1641245-01	Position A-2,A-4	CE
50	Single corner through passage	1641246-04	Horizontal position A-1,A-3	CE
		1641246-08	Horizontal position A-1,A-3	CE 3-A sanitary std
		3350026340	Alloy 254, Horizontal position A-1,A-3	CE
51	Single corner through passage	1641246-01	Horizontal position A-2,A-4	CE
		1641246-05	Horizontal position A-2,A-4	CE 3-A sanitary std
		3350026337	Alloy 254, Horizontal position A-2,A-4	CE
52	Single corner through passage	1641246-03	Vertical position A-1,A-3	CE
		1641246-07	Vertical position A-1,A-3	CE 3-A sanitary std
		3350026339	Alloy 254, Vertical position A-1,A-3	CE
53	Single corner through passage	1641246-02	Vertical position A-2,A-4	CE
		1641246-06	Vertical position A-2,A-4	CE 3-A sanitary std
		3350026338	Alloy 254, Vertical position A-2,A-4	CE
54	Single corner	1641233-04	Horizontal position A-1,A-3 if bottom towards frame plate, otherwise A-2,A-4	CE
		1641233-08	Horizontal position A-1,A-3 if bottom towards frame plate, otherwise A-2,A-4	CE 3-A sanitary std
		3350026325	Alloy 254, Horizontal position A-1,A-3 if bottom towards frame plate, otherwise A-2,A-4	CE
		3350026329	Alloy 254, Horizontal position A-1,A-3 if bottom towards frame plate, otherwise A-2,A-4	CE 3-A sanitary std
55	Single corner	1641233-01	Horizontal position A-2,A-4 if bottom towards frame plate, otherwise A-1,A-3	CE
		1641233-05	Horizontal position A-2,A-4 if bottom towards frame plate, otherwise A-1,A-3	CE 3-A sanitary std
		3350026322	Alloy 254, Horizontal position A-2,A-4 if bottom towards frame plate, otherwise A-1,A-3	CE
		3350026326	Alloy 254, Horizontal position A-2,A-4 if bottom towards frame plate, otherwise A-1,A-3	CE 3-A sanitary std
56	Single corner	1641233-03	Vertical position A-1,A-3 if bottom towards frame plate, otherwise A-2,A-4	CE
		1641233-07	Vertical position A-1,A-3 if bottom towards frame plate, otherwise A-2,A-4	CE 3-A sanitary std
		3350026324	Alloy 254, Vertical position A-1,A-3 if bottom towards frame plate, otherwise A-2,A-4	CE
		3350026328	Alloy 254, Vertical position A-1,A-3 if bottom towards frame plate, otherwise A-2,A-4	CE 3-A sanitary std
57	Single corner	1641233-02	Vertical position A-2,A-4 if bottom towards frame plate, otherwise A-1,A-3	CE
		1641233-06	Vertical position A-2,A-4 if bottom towards frame plate, otherwise A-1,A-3	CE 3-A sanitary std
		3350026323	Alloy 254, Vertical position A-2,A-4 if bottom towards frame plate, otherwise A-1,A-3	CE
		3350026327	Alloy 254, Vertical position A-2,A-4 if bottom towards frame plate, otherwise A-1,A-3	CE 3-A sanitary std
58	Single corner, DN50	34504406-04	Horizontal position A-1,A-3 if bottom towards frame plate, otherwise A-2,A-4	CE
		34504406-08	Horizontal position A-1,A-3 if bottom towards frame plate, otherwise A-2,A-4	CE 3-A sanitary std
		3350026345	Alloy 254, Horizontal position A-1,A-3 if bottom towards frame plate, otherwise A-2,A-4	CE
		3350026349	Alloy 254, Horizontal position A-1,A-3 if bottom towards frame plate, otherwise A-2,A-4	CE 3-A sanitary std
59	Single corner, DN50	34504406-01	Horizontal position A-2,A-4 if bottom towards frame plate, otherwise A-1,A-3	CE
		34504406-05	Horizontal position A-2,A-4 if bottom towards frame plate, otherwise A-1,A-3	CE 3-A sanitary std
		3350026342	Alloy 254, Horizontal position A-2,A-4 if bottom towards frame plate, otherwise A-1,A-3	CE
		3350026346	Alloy 254, Horizontal position A-2,A-4 if bottom towards frame plate, otherwise A-1,A-3	CE 3-A sanitary std
60	Single corner, DN50	34504406-03	Vertical position A-1,A-3 if bottom towards frame plate, otherwise A-2,A-4	CE
		34504406-07	Vertical position A-1,A-3 if bottom towards frame plate, otherwise A-2,A-4	CE 3-A sanitary std
		3350026344	Alloy 254, Vertical position A-1,A-3 if bottom towards frame plate, otherwise A-2,A-4	CE

		3350026348	Alloy 254, Vertical position A-1,A-3 if bottom towards frame plate, otherwise A-2,A-4	CE 3-A sanitary std
61	Single corner, DN50	34504406-02	Vertical position A-2,A-4 if bottom towards frame plate, otherwise A-1,A-3	CE
		34504406-06	Vertical position A-2,A-4 if bottom towards frame plate, otherwise A-1,A-3	CE 3-A sanitary std
		3350026343	Alloy 254, Vertical position A-2,A-4 if bottom towards frame plate, otherwise A-1,A-3	CE
		3350026347	Alloy 254, Vertical position A-2,A-4 if bottom towards frame plate, otherwise A-1,A-3	CE 3-A sanitary std
62	Double corner	1641234-02	Position A-1,A-3	CE
		1641234-04	Position A-1,A-3	CE 3-A sanitary std
		3350026333	Alloy 254, Position A-1,A-3	CE
		3350026335	Alloy 254, Position A-1,A-3	CE 3-A sanitary std
63	Double corner	1641234-01	Position A-2,A-4	CE
		1641234-03	Position A-2,A-4	CE 3-A sanitary std
		3350026332	Alloy 254, Position A-2,A-4	CE
		3350026334	Alloy 254, Position A-2,A-4	CE 3-A sanitary std
64	Double corner, DN50	34504407-02	Position A-1,A-3	CE
		34504407-04	Position A-1,A-3	CE 3-A sanitary std
		3350026363	Alloy 254, Position A-1,A-3	CE
		3350026365	Alloy 254, Position A-1,A-3	CE 3-A sanitary std
65	Double corner, DN50	34504407-01	Position A-2,A-4	CE
		34504407-03	Position A-2,A-4	CE 3-A sanitary std
		3350026362	Alloy 254, Position A-2,A-4	CE
		3350026364	Alloy 254, Position A-2,A-4	CE 3-A sanitary std
66	Single corner, DN50	34504406-10	(Extended) vertical position A-1 if bottom towards frame plate, otherwise A-4	CE
		3350026351	Alloy 254, (Extended) vertical position A-1 if bottom towards frame plate, otherwise A-4	CE
67	Single corner, DN50	34504406-09	(Extended) vertical position A-4 if bottom towards frame plate, otherwise A-1	CE
		3350026350	Alloy 254, (Extended) vertical position A-4 if bottom towards frame plate, otherwise A-1	CE
68	Double corner, DN50	3490014387-02	(Extended) position A1	CE
		3350026381	Alloy 254, (Extended) position A1	CE
69	Double corner, DN50	3490014387-01	(Extended) position A4	CE
		3350026382	Alloy 254, (Extended) position A4	CE
70	Washer	223101-61	BRB 10.5 x 22 - 2343	
71	Nut	221803-29	ISO 4032 - M10 - A4-70	
	Gasket ring		Same as for FP and PP, see above.	
	Fitting		Same as for FP and PP, see above.	
	Flange		Same as for FP and PP, see above.	

Blind connection

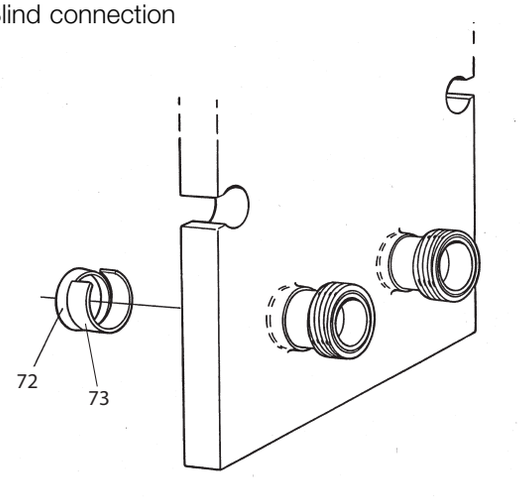

Drawing of blind connection.

Pos	*Denomination*	*AlfaLaval Part No*	*Specification*	*Comments*
72	Blind cover	1625418-03 1644951-01		CE For connection with connection pipe CE For connection without connection pipe
73	Spring	1625434-01		CE For connection with connection pipe

Spare Parts Lists Front 6 FRD-

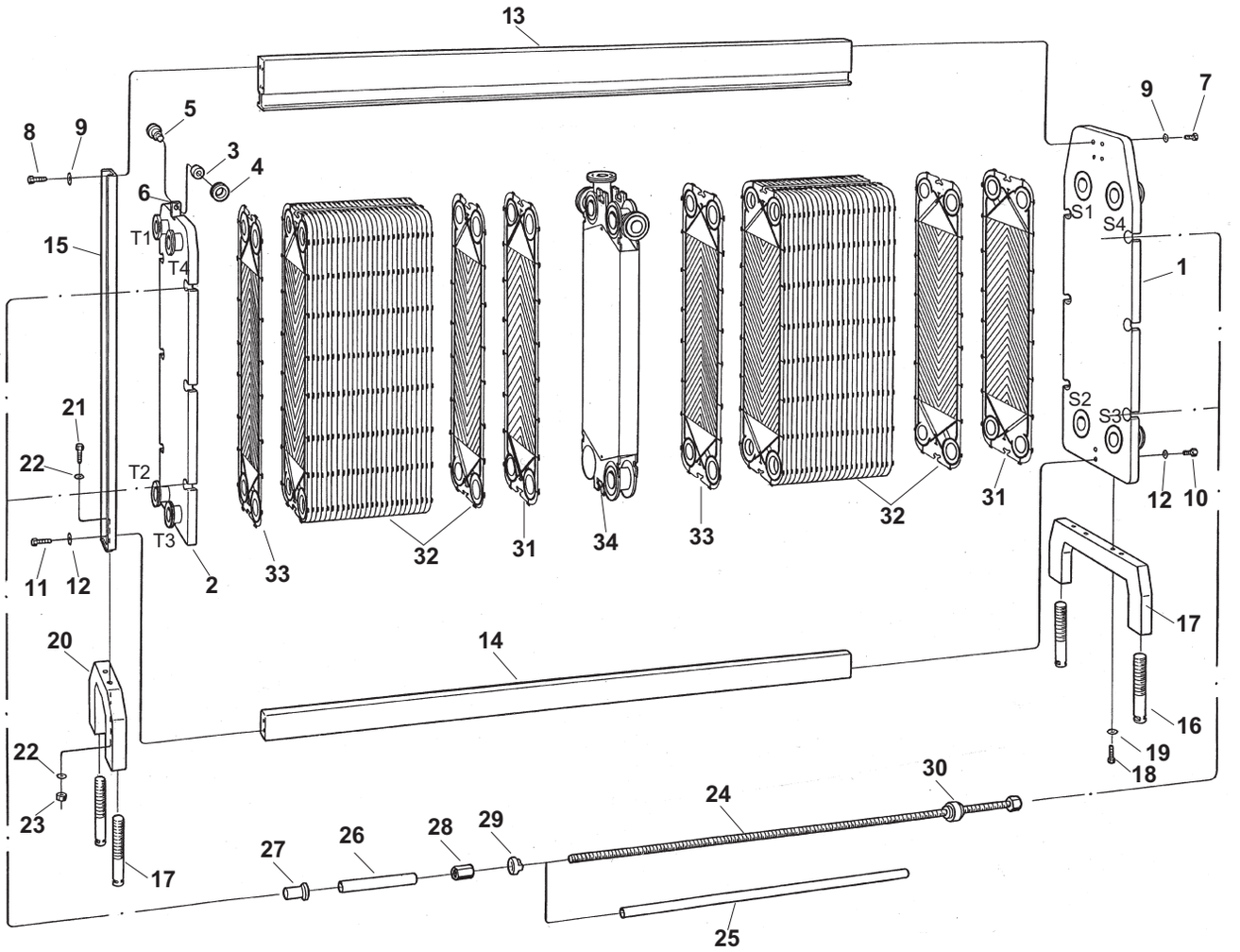

Exploded view of Front6-FRD.
11

Frame components

Pos	Denomination	AlfaLaval Part No	Specification	Comments
1	Frame plate	3350024765	4-holed S1 S2 S3 S4	CE
		3350024780	3-holed S1 S2 S3	CE
		3350024782	3-holed S2 S3 S4	CE
		3350024784	3-holed S1 S3 S4	CE
		3350024786	3-holed S1 S2 S4	CE
		3350024788	2-holed S1 S2	CE
		3350024790	2-holed S1 S3	CE
		3350024792	2-holed S1 S4	CE
		3350024794	2-holed S2 S3	CE
		3350024796	2-holed S2 S4	CE
		3350024799	2-holed S3 S4	CE
		3350024801	1-holed S1	CE
		3350024803	1-holed S2	CE
		3350024805	1-holed S3	CE
		3350024807	1-holed S4	CE
		3350024809	0-holed	CE
2	Pressure plate	3350024812	4-holed T1 T2 T3 T4	CE
		3350024814	3-holed T1 T2 T3	CE
		3350024816	3-holed T2 T3 T4	CE
		3350024818	3-holed T1 T3 T4	CE
		3350024820	3-holed T1 T2 T4	CE
		3350024822	2-holed T1 T2	CE
		3350024824	2-holed T1 T3	CE
		3350024826	2-holed T1 T4	CE
		3350024828	2-holed T2 T3	CE
		3350024830	2-holed T2 T4	CE
		3350024832	2-holed T3 T4	CE
		3350024834	1-holed T1	CE
		3350024836	1-holed T2	CE
		3350024838	1-holed T3	CE
		3350024840	1-holed T4	CE
		3350024842	0-holed	CE
3	Needle bearing	528402-03	NKI 20/16 INA	
4	Wheel	1620781-01		
5	Shaft	1620780-01		
6	Stop screw	260080-04	SK6SS 6x8	
7	Screw	221046-04	M6S M12x50	
8	Screw	221046-02	M6S M12x25	
9	Washer	223101-35	BRB 13x24	
10	Screw	221041–06	M10x50	
11	Screw	221041-01	M10x30	
12	Washer	223101-61	BRB 10.5x22	
13	Carrying bar	1623261-01	L=900	
		1623261-02	L=1200	
		1623261-03	L=1500	
		1623261-04	L=1800	
		1623261-07	L=2100	
		1623261-05	L=2400	
		1623261-06	L=SPEC.	
14	Guiding bar	1623416-01	L=900	
		1623416-02	L=1200	
		1623416-03	L=1500	
		1623416-04	L=1800	
		1623416-07	L=2100	
		1623416-05	L=2400	
		1623416-06	L=SPEC.	
15	Supporting column	1640390-01		
		3350029876		3-A sanitary std
16	Levelling screw	1640848-01	M30, L=200	
17	Foot	1640543-01	Low	
		1641164-01	High	
		3350029795	Low	3-A sanitary std
		3350029783	High	3-A sanitary std
18	Screw	2210463-01	M6S 16x25	
		2210463-43	ISO 4014 - M16 x 85 - A4-70	Valid for 3-A sanitary std
19	Washer	223101-37	BRB 17 x 30 - 2343	
20	Foot	1640546-01	Low	
		1641166-01	High	
		3350029791	Low	3-A sanitary std
		3350029775	High	3-A sanitary std
21	Screw	221046-03	ISO 4017 - M12 x 30 - A4-70	
		2210463-43	ISO 4014 - M16 x 85 - A4-70	Valid for 3-A sanitary std
22	Washer	223101-35	BRB 13 x 24 - 2343	
		223101-37	BRB 17 x 30 - 2343	Valid for 3-A sanitary std
23	Nut	221803-22	ISO 4032 - M12 - A4-70	
		221803-40	ISO 4032 - M16 - A4-70	Valid for 3-A sanitary std

24	Tightening bolt	1640815-02	M24 L=860	CE
		1640815-03	M24 L=1160	CE
		1640815-04	M24 L=1460	CE
		1640815-05	M24 L=1760	CE
		1640815-06	M24 L=2060	CE
		1640815-07	M24 L=2360	CE
		1640815-10	M24 L=SPEC.	CE
25	Protecting tube	1641357-02	L=708	For M24 bolt
		1641357-03	L=1008	For M24 bolt
		1641357-04	L=1308	For M24 bolt
		1641357-05	L=1608	For M24 bolt
		1641357-06	L=1908	For M24 bolt
		1641357-07	L=2208	For M24 bolt
		1641357-10	L=SPEC.	For M24 bolt
26	Plastic tube	1995-101-096	ID=22	For M24 bolt
27	Cap	1641360-03	M24	
28	Nut	1641667-01	M24	CE
29	Lock washer	1640840-01	M24	
30	Bearing box	1624183-01	M24	
31	End plate I			
32	Channel plates			
33	End plate II			
34	Connection plate	3350001046		CE
	Ratchet spanner	32220-3101-6	NV36/M24	Assembling tool
	Protecting sheet		Available for the Plate Heat Exchanger, contact your local Alfa Laval Representative for more information on how to order.	
		3350000635	Sign	For protecting sheet.

Connections

Connections in frame plate and pressure plate, Ø 51 mm

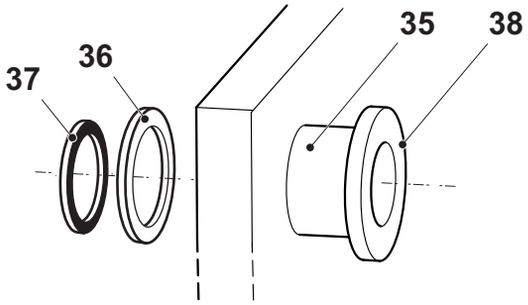

Drawing of connections, Ø 51 mm

Pos	*Denomination*	*AlfaLaval Part No*	*Specification*	*Comments*
35	Pipe	32324-7500-1	D51	CE
36	Welding ring	1640498-01		CE Valid for frame plate
		1640499-01		CE Valid for pressure plate
37	Gasket ring	34505262-01	NBRFF	Valid for frame plate
		34505262-02	EPDMFF	Valid for frame plate
38	Fitting	191004	SMS 51	
		31318-0010-1	DIN NW50	
		31319-0015-3	IDF 51	
		9611-30-389-2	RJT 51	
		9611-31-0210	CLAMP 51	
		1644793-03	SMS 51 MALE PART	CE
		1644796-03	DIN 51 MALE PART	CE
		1644799-03	IDF 51 MALE PART	CE
		1644802-03	RJT 51 MALE PART	CE
		1644805-03	CLAMP 51 NIPPLE	CE

Connections in frame plate and pressure plate, DN50

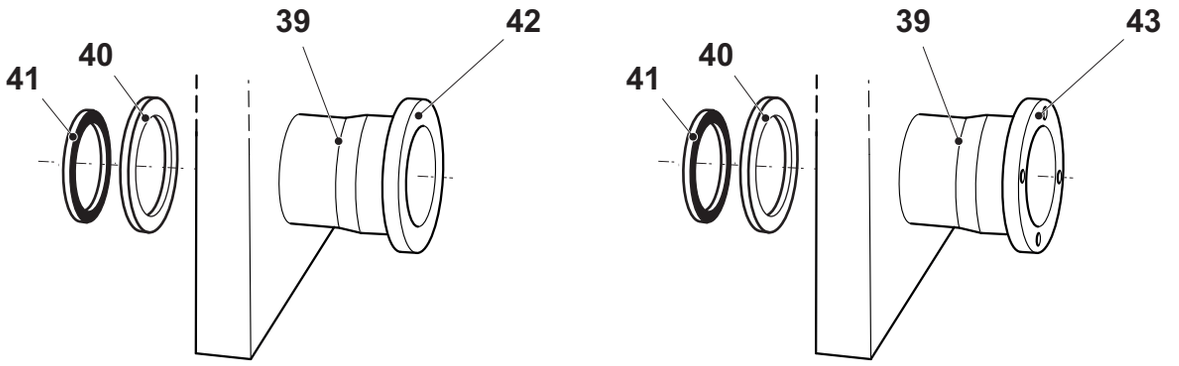

Drawing of connections, DN50

Pos	*Denomination*	*AlfaLaval Part No*	*Specification*	*Comments*
39	Pipe	1626365-01	Cone D51->D54	CE
40	Welding ring	1640498-01		CE Valid for frame plate
		1640499-01		CE Valid for pressure plate
41	Gasket ring	34505262-01	NBRFF	Valid for frame plate
		34505262-02	EPDMFF	Valid for frame plate
42	Fitting	34503625-01	DIN 11864-1 DN50	CE
43	Flange	1626363-01	DIN DN50/PN16	CE
		1626363-06	DIN DN50/PN25	CE

Connections in connection plate

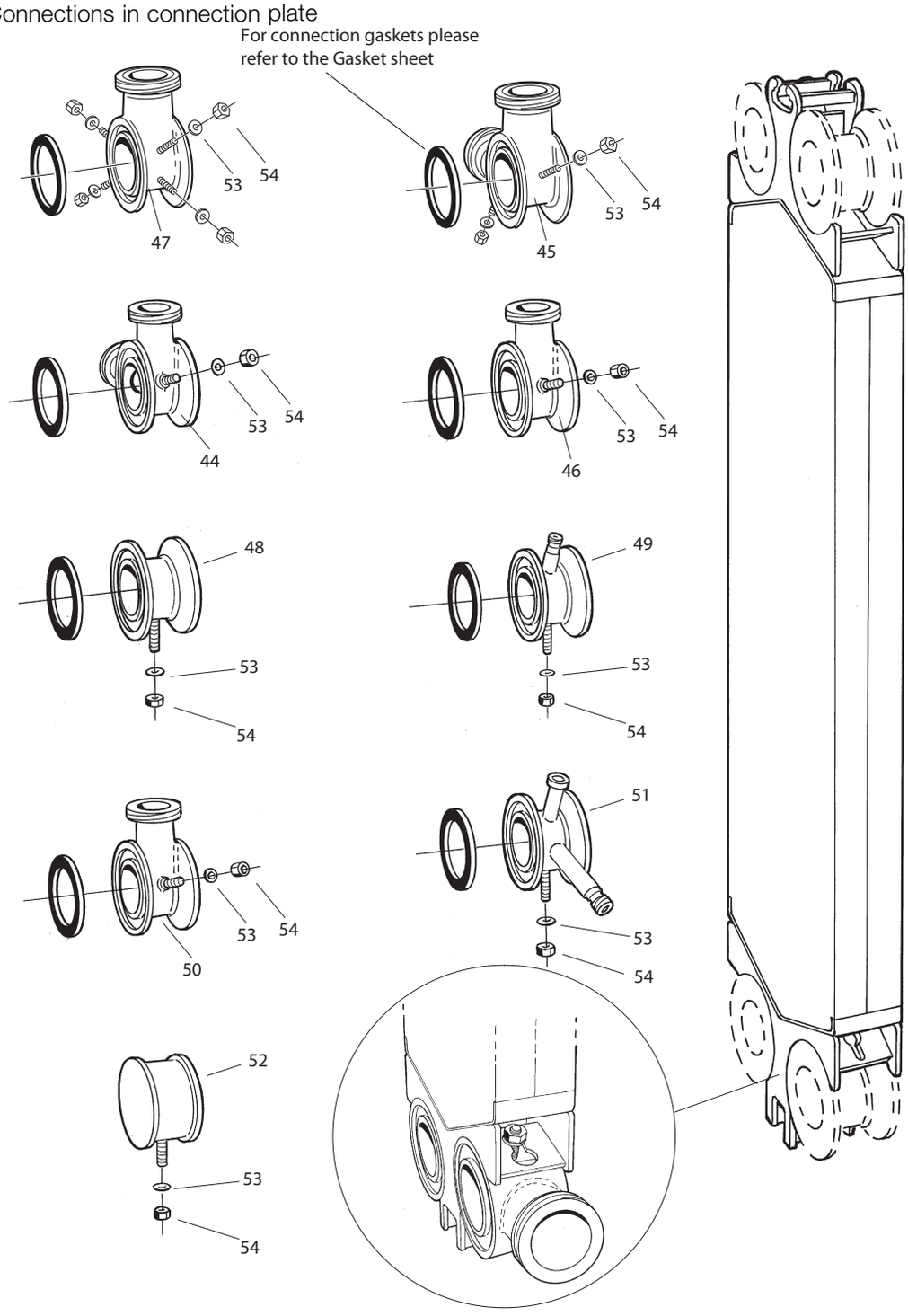

Drawing of connection plate corners.

Pos	Denomination	AlfaLaval Part No	Specification	Comments
44	Double corner	1641234-02	Position A-1,A-3	CE
		1641234-04	Position A-1,A-3	CE 3-A sanitary std
		1641234-01	Position A-2,A-4	CE
		1641234-03	Position A-2,A-4	CE 3-A sanitary std
45	Double corner, DN50	34504407-02	Position A-1,A-3	CE
		34504407-04	Position A-1,A-3	CE 3-A sanitary std
		34504407-01	Position A-2,A-4	CE
		34504407-03	Position A-2,A-4	CE 3-A sanitary std
46	Single corner	1641233-04	Horizontal position A-1,A-3 if bottom towards frame plate, otherwise A-2,A-4	CE
		1641233-08	Horizontal position A-1,A-3 if bottom towards frame plate, otherwise A-2,A-4	CE 3-A sanitary std
		1641233-01	Horizontal position A-2,A-4 if bottom towards frame plate, otherwise A-1,A-3	CE
		1641233-05	Horizontal position A-2,A-4 if bottom towards frame plate, otherwise A-1,A-3	CE 3-A sanitary std
		1641233-03	Vertical position A-1,A-3 if bottom towards frame plate, otherwise A-2,A-4	CE
		1641233-07	Vertical position A-1,A-3 if bottom towards frame plate, otherwise A-2,A-4	CE 3-A sanitary std
		1641233-02	Vertical position A-2,A-4 if bottom towards frame plate, otherwise A-1,A-3	CE
		1641233-06	Vertical position A-2,A-4 if bottom towards frame plate, otherwise A-1,A-3	CE 3-A sanitary std
47	Single corner, DN50	34504406-04	Horizontal position A-1,A-3 if bottom towards frame plate, otherwise A-2,A-4	CE
		34504406-08	Horizontal position A-1,A-3 if bottom towards frame plate, otherwise A-2,A-4	CE 3-A sanitary std
		34504406-01	Horizontal position A-2,A-4 if bottom towards frame plate, otherwise A-1,A-3	CE
		34504406-05	Horizontal position A-2,A-4 if bottom towards frame plate, otherwise A-1,A-3	CE 3-A sanitary std
		34504406-03	Vertical position A-1,A-3 if bottom towards frame plate, otherwise A-2,A-4	CE
		34504406-07	Vertical position A-1,A-3 if bottom towards frame plate, otherwise A-2,A-4	CE 3-A sanitary std
		34504406-02	Vertical position A-2,A-4 if bottom towards frame plate, otherwise A-1,A-3	CE
		34504406-06	Vertical position A-2,A-4 if bottom towards frame plate, otherwise A-1,A-3	CE 3-A sanitary std
48	Through passage	1625435-03		CE
		1625435-04		CE 3-A sanitary std
49	Through passage with dive tube	1641244-02	Position A-1,A-3	CE
		1641244-01	Position A-2,A-4	CE
50	Single corner through passage	1641246-04	Horizontal position A-1,A-3	CE
		1641246-08	Horizontal position A-1,A-3	CE 3-A sanitary std
		1641246-01	Horizontal position A-2,A-4	CE
		1641246-05	Horizontal position A-2,A-4	CE 3-A sanitary std
		1641246-03	Vertical position A-1,A-3	CE
		1641246-07	Vertical position A-1,A-3	CE 3-A sanitary std
		1641246-02	Vertical position A-2,A-4	CE
		1641246-06	Vertical position A-2,A-4	CE 3-A sanitary std
51	Through passage with dive tube and nib	1641245-01	Position A-2,A-4	CE
		1641245-02	Position A-1,A-3	CE
52	Blind corner	1625417-01		CE
53	Washer	223101-61	BRB 10.5 x 22 - 2343	
54	Nut	221803-29	ISO 4032 - M10 - A4-70	
	Gasket ring		Same as for FP and PP, see above.	
	Fitting		Same as for FP and PP, see above.	
	Flange		Same as for FP and PP, see above.	

Blind Connection

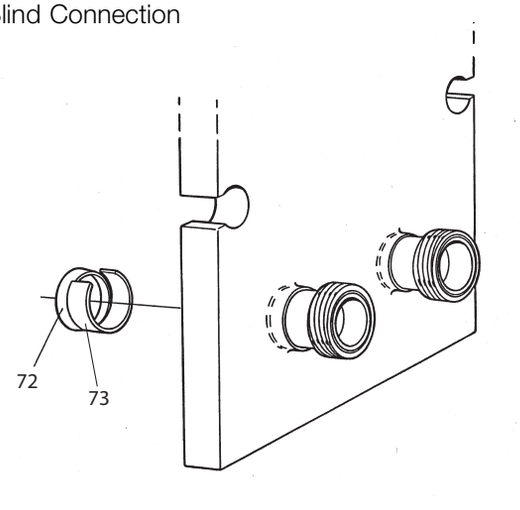

Drawing of blind connection.

Pos	*Denomination*	*AlfaLaval Part No*	*Specification*	*Comments*
55	Blind cover	1625418-03		CE Used for connection with connection pipe
		1644951-01		CE Used for connection without connection pipe
56	Spring	1625434-01		CE Used for connection with connection pipe

Spare Parts Lists Front 8 RM-

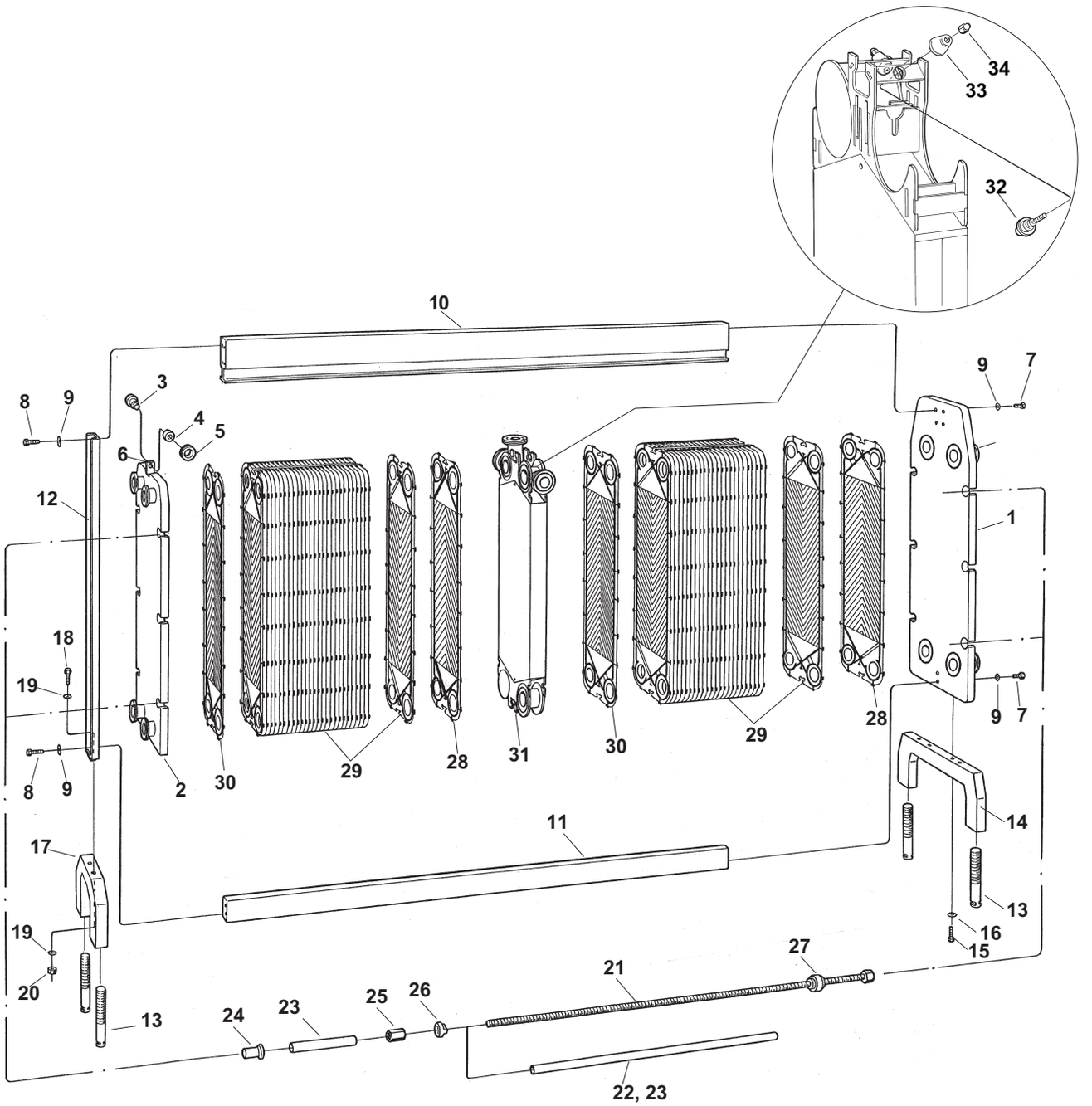

Exploded view of Front 8-RM.
14

Frame components

Pos	Denomination	AlfaLaval Part No	Specification	Comments
1	Frame plate	3350008332	Cladded, 4-holed	CE
		3350008335	Cladded, 2-holed S1 S4	CE
		3350008338	Cladded, 2-holed S2 S3	CE
		3350000696	Cladded, 4-holed	ALS
		3350000697	Cladded, 2-holed S1 S4	ALS
		3350000698	Cladded, 2-holed S2 S3	ALS
2	Pressure plate	3350000727	Cladded, Unholed	CE
		3350008343	Cladded, 4-holed	CE
		3350008346	Cladded, 2-holed T1 T4	CE
		3350008349	Cladded, 2-holed T2 T3	CE
		3350000728	Cladded, Unholed	ALS
		3350000732	Cladded, 4-holed	ALS
		3350000733	Cladded, 2-holed T1 T4	ALS
		3350000734	Cladded, 2-holed T2 T3	ALS
3	Shaft	1620780-01		
4	Needle bearing	528402-03	Brand: INA Type: Needle roller bearing NKI 20/16-XL	
5	Wheel	1620781-01		
6	Stop screw	260080-04	SK6SS 6x8-A4	
7	Screw	221046-38	ISO 4017 - M12 x 80 - A4-70	
8	Screw	221046-38	ISO 4017 - M12 x 80 - A4-70	For SC without foot (L≤1800)
		221046-22	ISO 4017 - M12 x 35 - A4-70	For SC with foot (L>1800)
9	Washer	223101-35	BRB 13 x 24 - 2343	
10	Carrying bar	1623150-01	L=1200	
		1623150-02	L=1800	
		1623150-03	L=2400	
		1623150-04	L=3000	
		1623150-05	L=3600	
		1623150-06	L= SPEC, max. 3600	
		34508664-01	Cladded, L=1200	
		34508664-02	Cladded, L=1800	
		34508664-03	Cladded, L=2400	
		34508664-04	Cladded, L=3000	
		34508664-05	Cladded, L=3600	
		34508664-06	Cladded, L=SPEC, max. 3600	
11	Guiding bar	32323-4001-2	L=1200	
		32323-4001-4	L=1800	
		32323-4001-6	L=2400	
		32323-4001-8	L=3000	
		32323-4002-1	L=3600	
		32323-4002-2	L=SPEC.	
12	Supporting column	3350000815	Used without foot	For L≤1800 in combination with low FP foot
		3350000817	Used without foot	For L≤1800 in combination with high FP foot
		1640448-01		For L>1800
13	Levelling screw	1640885-02	M39, L=230	For low foot
		1640885-01	M39, L=280	For high foot
		1640848-01	M30, L=200	For SC without foot (L≤1800) in combination with low FP foot
		1640848-02	M30, L=250	For SC without foot (L≤1800) in combination with high FP foot
14	Foot	3350000605	Low	
		1640548-01	High	
15	Screw	2210463-02	ISO 4017 - M16 x 30 - A4-70	For low foot
		2210463-03	ISO 4017 - M16 x 40 - A4-70	For high foot
16	Washer	233101-37	BRB 17 x 30 - 2343	
17	Foot	3350000610	Low	For L>1800
		1640551-01	High	For L>1800
18	Screw	2210463-02	ISO 4017 - M16 x 30 - A4-70	For low foot
		2210463-03	ISO 4017 - M16 x 40 - A4-70	For high foot
19	Washer	223101-37	BRB 17 x 30 - 2343	
20	Nut	221803-40	ISO 4032 - M16 - A4-70	
21	Tightening bolt	1624463-03	M30, L=1160	ALS, CE
		1624463-04	M30, L=1460	ALS, CE
		1624463-05	M30, L=1760	ALS, CE
		1624463-06	M30, L=2060	ALS, CE
		1624463-07	M30, L=2360	ALS, CE
		1624463-08	M30, L=2960	ALS, CE
		1624463-09	M30, L=3560	ALS, CE
		1624463-10	M30, L=SPEC.	ALS, CE
22	Plastic tube	1995-101-082	ID=32	For M30 bolt
23	Protecting tube	1641358-03	L=964	For M30 bolt
		1641358-04	L=1264	For M30 bolt
		1641358-05	L=1564	For M30 bolt
		1641358-06	L=1864	For M30 bolt
		1641358-07	L=2164	For M30 bolt
		1641358-08	L=2764	For M30 bolt
		1641358-09	L=3364	For M30 bolt

		1641358-10	L=SPEC.	For M30 bolt
24	Cap	1641360-04	M30	
25	Nut	1641668-03	M30	ALS, CE
26	Lock washer	32234-4897-1		
27	Bearing box	1624157-01	M30	
28	End plate I			
29	Channel plates			
30	End plate II			
31	Connection plate	3350000470		ALS, CE
32	Bolt	1640386–01	Roller screw	
33	Dished washer	1640385-01		
34	Acron nut	1640387-01		
	Ratchet spanner	32220-3101-5	M30, NV46	Assembling tool
	Protection sheet		Available for the Plate Heat Exchanger, contact your local Alfa Laval Representative for more information on how to order.	
		3350000635	Sign	For protection sheet.

Connections

Connections in frame plate and pressure plate, Ø76



Drawing of connections, Ø76.1

Pos	Denomination	AlfaLaval Part No	Specification	Comments
35	Pipe	3350000198	316L	ALS For frame plate
		3350000582	316L	ALS For pressure plate
36	Pipe	3350000887		ALS
		32324-7483-1		CE
		3350026145	Alloy 254	CE
37	Welding ring	3350000774	316L	ALS For frame plate
		3350008341		CE For frame plate
		3350026146	Alloy 254	CE For frame plate
		3350000775	316L	ALS For pressure plate
		3350008342		CE For pressure plate
		3350026179	Alloy 254	CE For pressure plate
38	Gasket ring	34505263-02	EPDMFF	For frame plate
		34505263-01	NBRFF	For frame plate
39	Fitting	1644793-05	SMS 76 MALE PART	ALS, CE
		3350019815	DIN 76 NW80 MALE PART, Inside tappered	ALS, CE
		1644805-05	CLAMP 76 NIPPLE	ALS, CE
		1644799-05	IDF 76 MALE PART	ALS, CE
		1644802-05	RJT 76 MALE PART	ALS, CE
		3350026151	Alloy 254, SMS 76 MALE PART	ALS, CE
		3350026156	Alloy 254, DIN 76 NW80 MALE PART, Inside tappered	ALS, CE
		3350026147	Alloy 254, CLAMP 76 NIPPLE	ALS, CE

Connections in frame plate and pressure plate, DN80

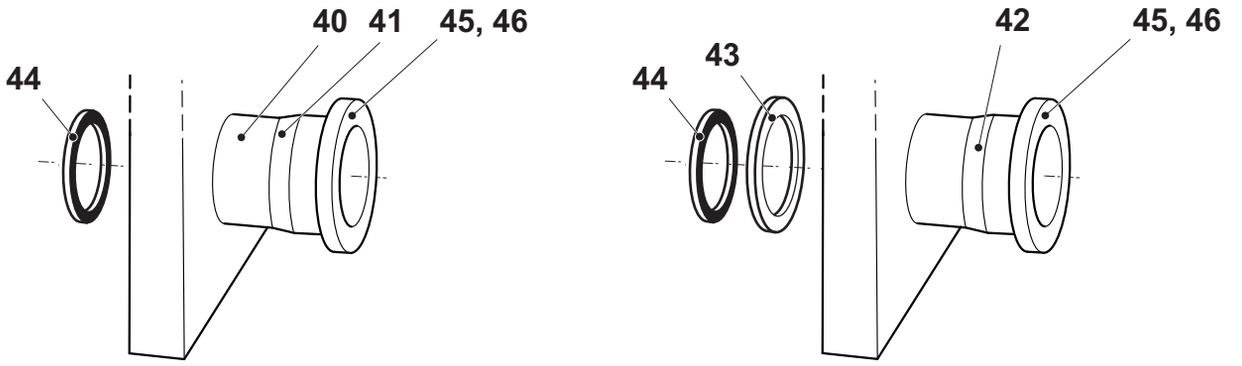

Drawing of connections, DN80

Pos	*Denomination*	*AlfaLaval Part No*	*Specification*	*Comments*
40	Pipe	3350000198	316L	ALS For frame plate
		3350000582	316L	ALS For pressure plate
41	Pipe	34504429-01		ALS
42	Pipe	3350018100		CE
		3350026158	Alloy 254	CE
43	Welding ring	3350008341		CE For frame plate
		3350026146	Alloy 254	CE For frame plate
		3350008342		CE For pressure plate
		3350026179	Alloy 254	CE For pressure plate
44	Gasket ring	34505263-02	EPDMFF	For frame plate
		34505263-01	NBRFF	For frame plate
45	Fitting	34503624-01	DIN 11864-1 DN80	ALS, CE
46	Flange	1626363-02	DIN 2633 DN80/PN16	ALS, CE
		3350017921	DIN 11864-2 DN80	CE
		3350018010	FG1 PN10 DN80	CE
		3350018006	FN1 PN10 DN80	CE
		3350026160	Alloy 254, DIN 11864-2 DN80	CE

Connections in connection plate

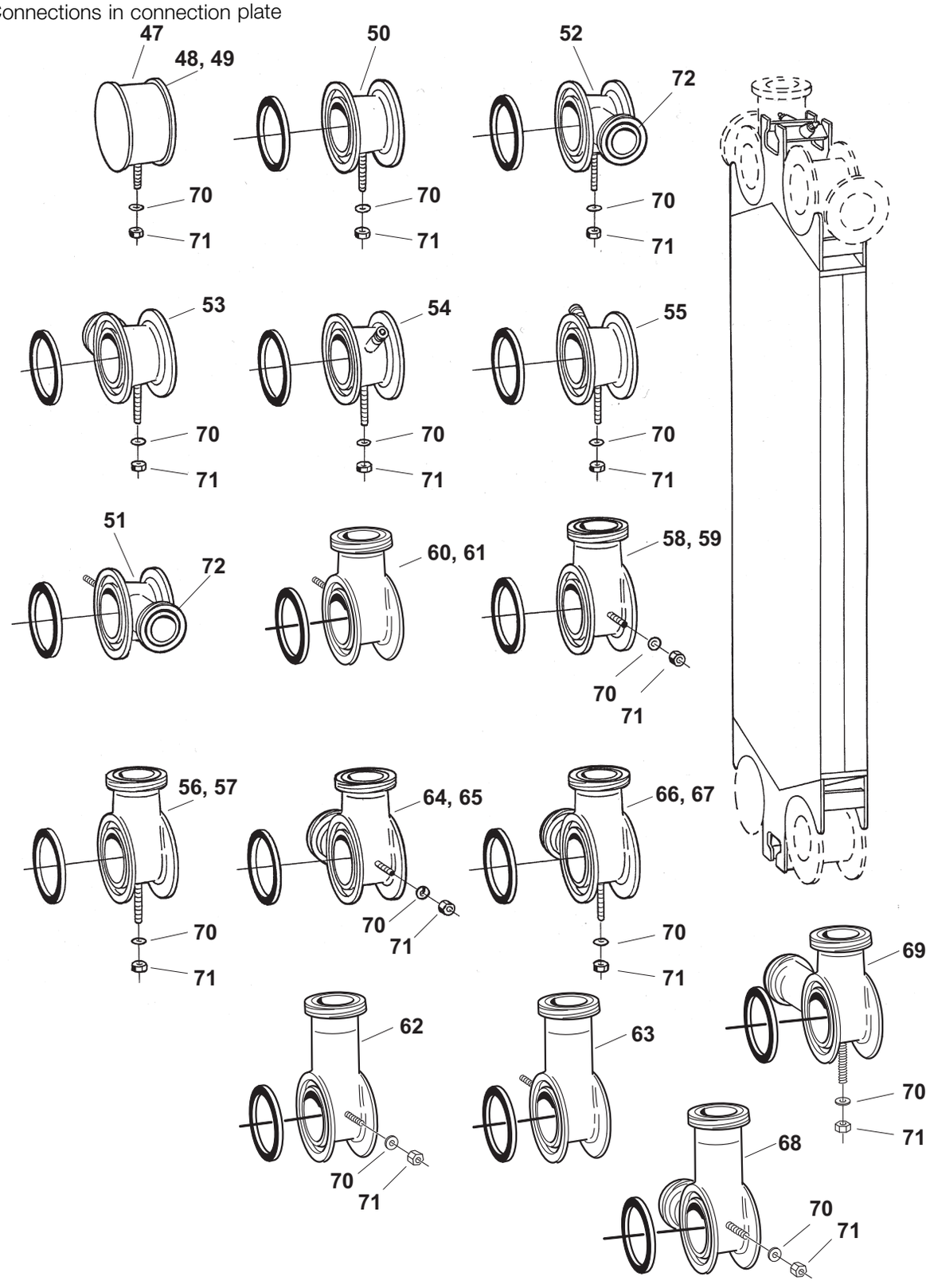

Drawing of connection plate corners.

Pos	Denomination	AlfaLaval Part No	Specification	Comments
47	Blind corner	1625304-04		ALS, CE
48	Sheet	3350009412	SS	For blind corner with lining
49	Tape	3350009413	3M SCOTCH VHB 4945	For blind corner with lining
50	Through passage	1625318-01		ALS, CE
		1625318-02		ALS, CE 3-A sanitary std
		3350026162	Alloy 254	ALS, CE
		3350026163	Alloy 254	ALS, CE 3-A sanitary std
51	Through passage with 2" connection	3350019844	Horizontal position	ALS, CE
		3350019846	Horizontal position	ALS, CE 3-A sanitary std
52	Through passage with 2" connection	1640864-01	Vertical position A-1 and A-3	ALS, CE
		1640864-03	Vertical position A-1 and A-3	ALS, CE 3-A sanitary std
53	Through passage with 2" connection	1640864-02	Vertical position A-2 and A-4	ALS, CE
		1640864-04	Vertical position A-2 and A-4	ALS, CE 3-A sanitary std
54	Through passage with dive tube	1640865-03	Position A-1 and A-3	ALS, CE
55	Through passage with dive tube	1640865-04	Position A-2 and A-4	ALS, CE
56	Single corner	1640866-02	Horizontal all positions	ALS, CE
		1640866-07	Horizontal all positions	ALS, CE 3-A sanitary std
		3350026165	Alloy 254, Horizontal all positions	ALS, CE
		3350026191	Alloy 254, Horizontal all positions	ALS, CE 3-A sanitary std
57	Single corner, DN80	34504415-02	Horizontal all positions	ALS, CE
		3350026170	Alloy 254, Horizontal all positions	ALS, CE
58	Single corner	1640866-01	Vertical position A-1,A-3 if bottom towards frame plate, otherwise A-2,A-4	ALS, CE
		1640866-06	Vertical position A-1,A-3 if bottom towards frame plate, otherwise A-2,A-4	ALS, CE 3-A sanitary std
		3350026166	Alloy 254, Vertical position A-1,A-3 if bottom towards frame plate, otherwise A-2,A-4	ALS, CE
		3350026193	Alloy 254, Vertical position A-1,A-3 if bottom towards frame plate, otherwise A-2,A-4	ALS, CE 3-A sanitary std
59	Single corner, DN80	34504415-01	Vertical position A-1,A-3 if bottom towards frame plate, otherwise A-2,A-4	ALS, CE
		3350026169	Alloy 254, Vertical position A-1,A-3 if bottom towards frame plate, otherwise A-2,A-4	ALS, CE
60	Single corner	1640866-03	Vertical position A-2,A-4 if bottom towards frame plate, otherwise A-1,A-3	ALS, CE
		1640866-08	Vertical position A-2,A-4 if bottom towards frame plate, otherwise A-1,A-3	ALS, CE 3-A sanitary std
		3350026167	Alloy 254, Vertical position A-2,A-4 if bottom towards frame plate, otherwise A-1,A-3	ALS, CE
		3350026194	Alloy 254, Vertical position A-2,A-4 if bottom towards frame plate, otherwise A-1,A-3	ALS, CE 3-A sanitary std
61	Single corner, DN80	34504415-03	Vertical position A-2,A-4 if bottom towards frame plate, otherwise A-1,A-3	ALS, CE
		3350026171	Alloy 254, Vertical position A-2,A-4 if bottom towards frame plate, otherwise A-1,A-3	ALS, CE
62	Single corner, DN80	34504415-07	(Extended) vertical position A-1 if bottom towards frame plate, otherwise A-4	ALS, CE
		3350026172	Alloy 254, (Extended) vertical position A-1 if bottom towards frame plate, otherwise A-4	ALS, CE
63	Single corner, DN80	34504415-08	(Extended) vertical position A-4 if bottom towards frame plate, otherwise A-1	ALS, CE
		3350026173	Alloy 254, (Extended) vertical position A-4 if bottom towards frame plate, otherwise A-1	ALS, CE
64	Double corner	1640867-01	Position A-1 and A-3	ALS, CE
		1640867-07	Position A-1 and A-3	ALS, CE 3-A sanitary std
		3350026186	Alloy 254, Position A-1 and A-3	ALS, CE
		3350026195	Alloy 254, Position A-1 and A-3	ALS, CE 3-A sanitary std
65	Double corner, DN80	34504416-01	Position A-1 and A-3	ALS, CE
		3350026189	Alloy 254, Position A-1 and A-3	ALS, CE
66	Double corner	1640867-02	Position A-2 and A-4	ALS, CE
		1640867-08	Position A-2 and A-4	ALS, CE 3-A sanitary std
		3350026187	Alloy 254, Position A-2 and A-4	ALS, CE
		3350026188	Alloy 254, Position A-2 and A-4	ALS, CE 3-A sanitary std
67	Double corner, DN80	34504416-02	Position A-2 and A-4	ALS, CE
		3350026190	Alloy 254, Position A-2 and A-4	ALS, CE
68	Double corner, DN80	3350018219	(Extended) position A1	ALS, CE
		3350026205	Alloy 254, (Extended) position A-1	ALS, CE
69	Double corner, DN80	3350018220	(Extended) position A4	ALS, CE
		3350026206	Alloy 254, (Extended) position A-4	ALS, CE
70	Washer	223101-61	BRB 10.5 x 22 - 2343	
71	Nut	221803-29	ISO 4032 - M10 - A4-70	
72	Fitting, Ø51	1644805-03	CLAMP 51 NIPPLE	CE, ALS For through passage with 2" connection
	Gasket ring		Same as for FP and PP, see above.	
	Fitting		Same as for FP and PP, see above.	

	Flange	Same as for FP and PP, see above.

Blind connection

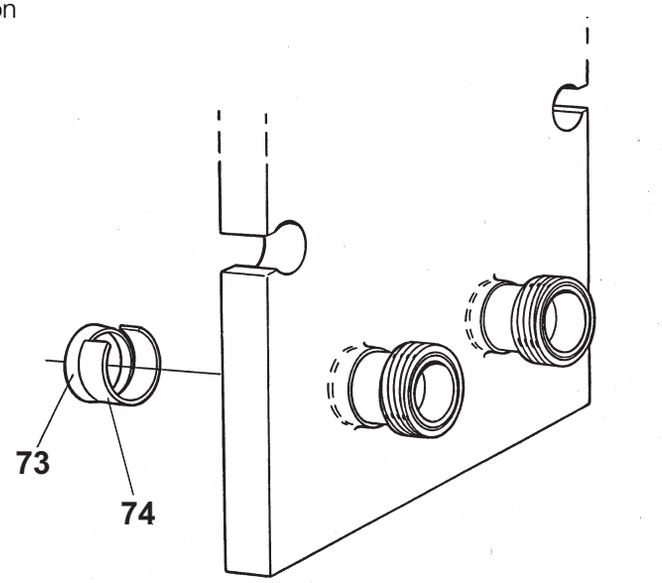

Drawing of blind connection.

Pos	*Denomination*	*AlfaLaval Part No*	*Specification*	*Comments*
73	Blind cover	1625309-03		CE For connection with connection pipe
		3350008455		CE For connection without connection pipe
		3350000864		ALS For connection with connection pipe
		3350000865		ALS For frame plate. For connection without connection pipe
		3350000866		ALS For pressure plate. For connection without connection pipe
74	Spring	32324-7909-2		CE For connection with connection pipe

Spare Parts Lists Front 8 RH-

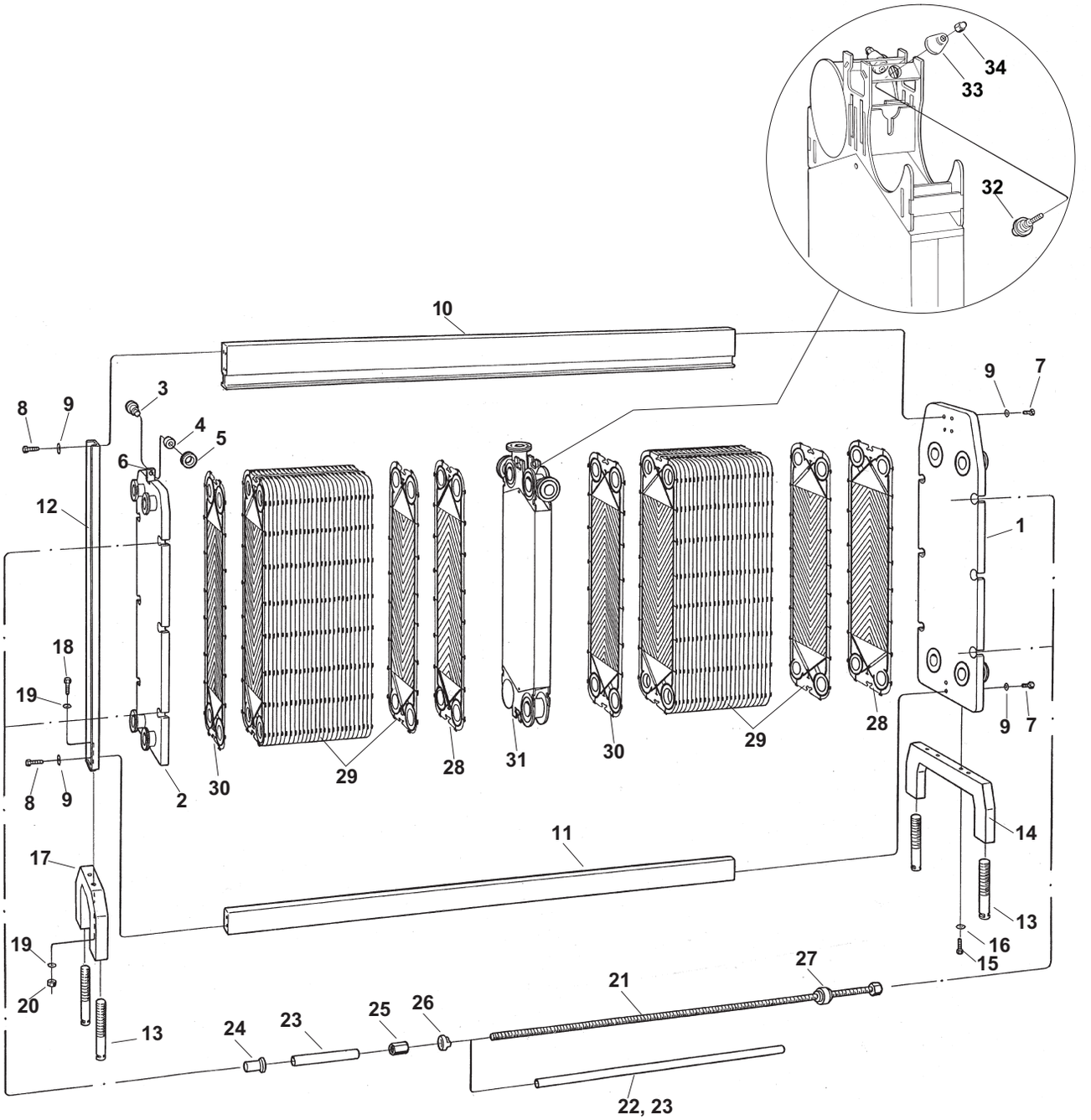

Exploded view of Front 8-RH.
13

Frame components

Pos	Denomination	AlfaLaval Part No	Specification	Comments
1	Frame plate	3350008332	Cladded, 4-holed	CE
		3350008335	Cladded, 2-holed S1 S4	CE
		3350008338	Cladded, 2-holed S2 S3	CE
		3350000696	Cladded, 4-holed	ALS
		3350000697	Cladded, 2-holed S1 S4	ALS
		3350000698	Cladded, 2-holed S2 S3	ALS
2	Pressure plate	3350000727	Cladded, Unholed	CE
		3350008343	Cladded, 4-holed	CE
		3350008346	Cladded, 2-holed T1 T4	CE
		3350008349	Cladded, 2-holed T2 T3	CE
		3350000728	Cladded, Unholed	ALS
		3350000732	Cladded, 4-holed	ALS
		3350000733	Cladded, 2-holed T1 T4	ALS
		3350000734	Cladded, 2-holed T2 T3	ALS
3	Shaft	1620780-01		
4	Needle bearing	528402-03	Brand: INA Type: Needle roller bearing NKI 20/16-XL	
5	Wheel	1620781-01		
6	Stop screw	260080-04	SK6SS 6x8-A4	
7	Screw	221046-38	ISO 4017 - M12 x 80 - A4-70	
8	Screw	221046-38	ISO 4017 - M12 x 80 - A4-70	For SC without foot (L≤1800)
		221046-22	ISO 4017 - M12 x 35 - A4-70	For SC with foot (L>1800)
9	Washer	223101-35	BRB 13 x 24 - 2343	
10	Carrying bar	1623150-01	L=1200	
		1623150-02	L=1800	
		1623150-03	L=2400	
		1623150-04	L=3000	
		1623150-05	L=3600	
		1623150-06	L= SPEC, max. 3600	
		34508664-01	Cladded, L=1200	
		34508664-02	Cladded, L=1800	
		34508664-03	Cladded, L=2400	
		34508664-04	Cladded, L=3000	
		34508664-05	Cladded, L=3600	
		34508664-06	Cladded, L= SPEC, max. 3600	
11	Guiding bar	32323-4001-2	L=1200	
		32323-4001-4	L=1800	
		32323-4001-6	L=2400	
		32323-4001-8	L=3000	
		32323-4002-1	L=3600	
		32323-4002-2	L= SPEC, max. 3600	
12	Supporting column	3350000815	Used without foot	For L≤1800 in combination with low FP foot
		3350000817	Used without foot	For L≤1800 in combination with high FP foot
		1640448-01		For L>1800
13	Levelling screw	1640885-02	M39, L=230	For low foot
		1640885-01	M39, L=280	For high foot
		1640848-01	M30, L=200	For SC without foot (L≤1800) in combination with low FP foot
		1640848-02	M30, L=250	For SC without foot (L≤1800) in combination with high FP foot
14	Foot	3350000605	Low	
		1640548-01	High	
15	Screw	2210463-02	ISO 4017 - M16 x 30 - A4-70	For low foot
		2210463-03	ISO 4017 - M16 x 40 - A4-70	For high foot
16	Washer	233101-37	BRB 17 x 30 - 2343	
17	Foot	3350000610	Low	For L>1800
		1640551-01	High	For L>1800
18	Screw	2210463-02	ISO 4017 - M16 x 30 - A4-70	For low foot
		2210463-03	ISO 4017 - M16 x 40 - A4-70	For high foot
19	Washer	223101-37	BRB 17 x 30 - 2343	
20	Nut	221803-40	ISO 4032 - M16 - A4-70	
21	Tightening bolt	1624463-03	M30, L=1160	CE, ALS
		1624463-04	M30, L=1460	CE, ALS
		1624463-05	M30, L=1760	CE, ALS
		1624463-06	M30, L=2060	CE, ALS
		1624463-07	M30, L=2360	CE, ALS
		1624463-08	M30, L=2960	CE, ALS
		1624463-09	M30, L=3560	CE, ALS
		1624463-10	M30, L=SPEC.	CE, ALS
22	Plastic tube	1995-101-082	ID=32	For M30 bolt
23	Protecting tube	1641358-03	L=964	For M30 bolt
		1641358-04	L=1264	For M30 bolt
		1641358-05	L=1564	For M30 bolt
		1641358-06	L=1864	For M30 bolt
		1641358-07	L=2164	For M30 bolt
		1641358-08	L=2764	For M30 bolt
		1641358-09	L=3364	For M30 bolt

		1641358-10	L=SPEC.	For M30 bolt
24	Cap	1641360-04	M30	
25	Nut	1641668-03	M30	CE, ALS
26	Lock washer	32234-4897-1		
27	Bearing box	1624157-01	M30	
28	End plate I			
29	Channel plates			
30	End plate II			
31	Connection plate	3350000470		CE, ALS
32	Bolt	1640386-01	Roller screw	
33	Dished washer	1640385-01		
34	Acron nut	1640387-01		
	Ratchet spanner	32220-3101-5	M30, NV46	Assembling tool
	Protection sheet		Available for the Plate Heat Exchanger, contact your local Alfa Laval Representative for more information on how to order.	
		3350000635	Sign	For protection sheet.

Connections

Connections in frame plate and pressure plate, Ø76



Drawing of connections, Ø76.1

Pos	Denomination	AlfaLaval Part No	Specification	Comments
35	Pipe	3350000198	316L	ALS For frame plate
		3350000582	316L	ALS For pressure plate
36	Pipe	3350000887		ALS
		32324-7483-1		CE
		3350026145	Alloy 254	CE
37	Welding ring	3350000774	316L	ALS For frame plate
		3350008341		CE For frame plate
		3350026146	Alloy 254	CE For frame plate
		3350000775	316L	ALS For pressure plate
		3350008342		CE For pressure plate
		3350026179	Alloy 254	CE For pressure plate
38	Gasket ring	34505263-02	EPDMFF	For frame plate
		34505263-01	NBRFF	For frame plate
39	Fitting	1644793-05	SMS 76 MALE PART	CE, ALS
		3350019815	DIN 76 NW80 MALE PART, Inside tappered	CE, ALS
		1644805-05	CLAMP 76 NIPPLE	CE, ALS
		1644799-05	IDF 76 MALE PART	CE, ALS
		1644802-05	RJT 76 MALE PART	CE, ALS
		3350026151	Alloy 254, SMS 76 MALE PART	CE, ALS
		3350026156	Alloy 254, DIN 76 NW80 MALE PART, Inside tappered	CE, ALS
		3350026147	Alloy 254, CLAMP 76 NIPPLE	CE, ALS

Connections in frame plate and pressure plate, DN80

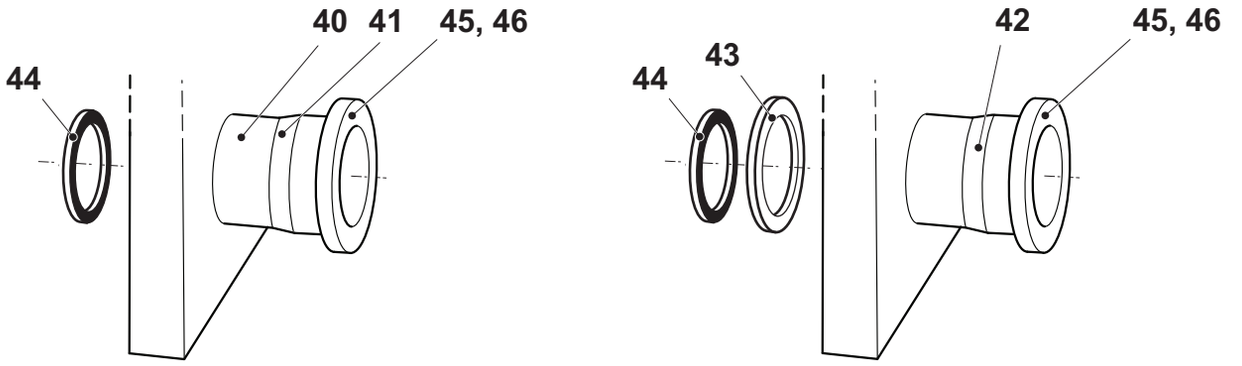

Drawing of connections, DN80

Pos	*Denomination*	*AlfaLaval Part No*	*Specification*	*Comments*
40	Pipe	3350000198	316L	ALS For frame plate
		3350000582	316L	ALS For pressure plate
41	Pipe	34504429-01		ALS
42	Pipe	3350018100		CE
		3350026158	Alloy 254	CE
43	Welding ring	3350008341		CE For frame plate
		3350026146	Alloy 254	CE For frame plate
		3350008342		CE For pressure plate
		3350026179	Alloy 254	CE For pressure plate
44	Gasket ring	34505263-02	EPDMFF	For frame plate
		34505263-01	NBRFF	For frame plate
45	Fitting	34503624-01	DIN 11864-1 DN80	CE, ALS
46	Flange	1626363-02	DIN 2633 DN80/PN16	CE, ALS
		3350017921	DIN 11864-2 DN80	CE, ALS
		3350026160	Alloy 254, DIN 11864-2 DN80	CE, ALS

Connections in connection plate

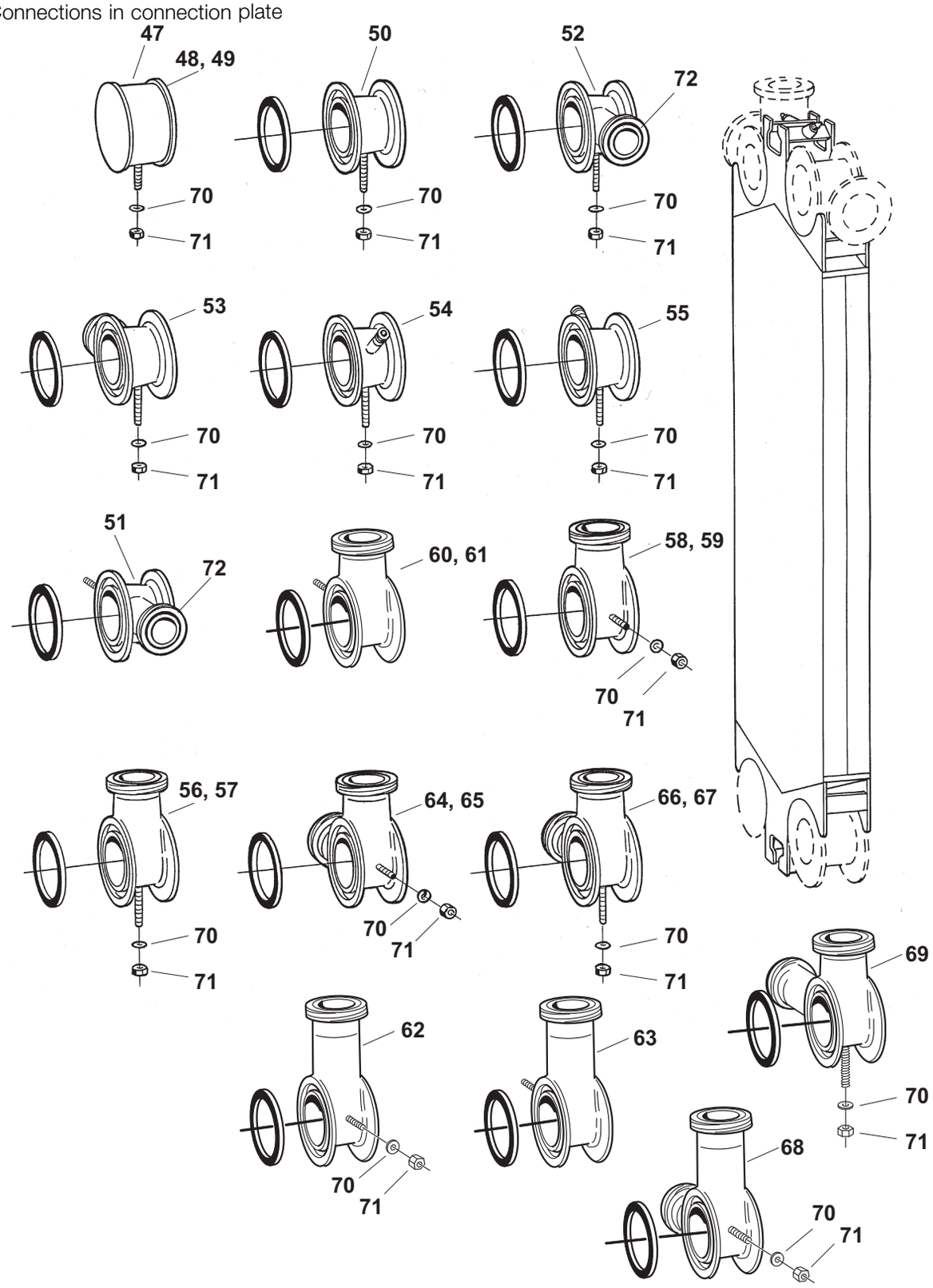

Drawing of connection plate corners.

Pos	Denomination	AlfaLaval Part No	Specification	Comments
47	Blind corner	1625304-04		CE, ALS
48	Sheet	3350009412	SS	For blind corner with lining
49	Tape	3350009413	3M SCOTCH VHB 4945	For blind corner with lining
50	Through passage	1625318-01		CE, ALS
		1625318-02		CE, ALS 3-A sanitary std
		3350026162	Alloy 254	CE, ALS
		3350026163	Alloy 254	CE, ALS 3-A sanitary std
51	Through passage with 2" connection	3350019844	Horizontal position	CE, ALS
		3350019846	Horizontal position	CE, ALS 3-A sanitary std
52	Through passage with 2" connection	1640864-01	Vertical position A-1 and A-3	CE, ALS
		1640864-03	Vertical position A-1 and A-3	CE, ALS 3-A sanitary std
53	Through passage with 2" connection	1640864-02	Vertical position A-2 and A-4	CE, ALS
		1640864-04	Vertical position A-2 and A-4	CE, ALS 3-A sanitary std
54	Through passage with dive tube	1640865-03	Position A-1 and A-3	CE, ALS
55	Through passage with dive tube	1640865-04	Position A-2 and A-4	CE, ALS
56	Single corner	1640866-02	Horizontal all positions	CE, ALS
		1640866-07	Horizontal all positions	CE, ALS 3-A sanitary std
		3350026165	Alloy 254, Horizontal all positions	CE, ALS
		3350026191	Alloy 254, Horizontal all positions	CE, ALS 3-A sanitary std
57	Single corner, DN80	34504415-02	Horizontal all positions	CE, ALS
		3350026170	Alloy 254, Horizontal all positions	CE, ALS
58	Single corner	1640866-01	Vertical position A-1,A-3 if bottom towards frame plate, otherwise A-2,A-4	CE, ALS
		1640866-06	Vertical position A-1,A-3 if bottom towards frame plate, otherwise A-2,A-4	CE, ALS 3-A sanitary std
		3350026166	Alloy 254, Vertical position A-1,A-3 if bottom towards frame plate, otherwise A-2,A-4	CE, ALS
		3350026193	Alloy 254, Vertical position A-1,A-3 if bottom towards frame plate, otherwise A-2,A-4	CE, ALS 3-A sanitary std
59	Single corner, DN80	34504415-01	Vertical position A-1,A-3 if bottom towards frame plate, otherwise A-2,A-4	CE, ALS
		3350026169	Alloy 254, Vertical position A-1,A-3 if bottom towards frame plate, otherwise A-2,A-4	CE, ALS
60	Single corner	1640866-03	Vertical position A-2,A-4 if bottom towards frame plate, otherwise A-1,A-3	CE, ALS
		1640866-08	Vertical position A-2,A-4 if bottom towards frame plate, otherwise A-1,A-3	CE, ALS 3-A sanitary std
		3350026167	Alloy 254, Vertical position A-2,A-4 if bottom towards frame plate, otherwise A-1,A-3	CE, ALS
		3350026194	Alloy 254, Vertical position A-2,A-4 if bottom towards frame plate, otherwise A-1,A-3	CE, ALS 3-A sanitary std
61	Single corner, DN80	34504415-03	Vertical position A-2,A-4 if bottom towards frame plate, otherwise A-1,A-3	CE, ALS
		3350026171	Alloy 254, Vertical position A-2,A-4 if bottom towards frame plate, otherwise A-1,A-3	CE, ALS
62	Single corner, DN80	34504415-07	(Extended) vertical position A-1 if bottom towards frame plate, otherwise A-4	CE, ALS
		3350026172	Alloy 254, (Extended) vertical position A-1 if bottom towards frame plate, otherwise A-4	CE, ALS
63	Single corner, DN80	34504415-08	(Extended) vertical position A-4 if bottom towards frame plate, otherwise A-1	CE, ALS
		3350026173	Alloy 254, (Extended) vertical position A-4 if bottom towards frame plate, otherwise A-1	CE, ALS
64	Double corner	1640867-01	Position A-1 and A-3	CE, ALS
		1640867-07	Position A-1 and A-3	CE, ALS 3-A sanitary std
		3350026186	Alloy 254, Position A-1 and A-3	CE, ALS
		3350026195	Alloy 254, Position A-1 and A-3	CE, ALS 3-A sanitary std
65	Double corner, DN80	34504416-01	Position A-1 and A-3	CE, ALS
		3350026189	Alloy 254, Position A-1 and A-3	CE, ALS
66	Double corner	1640867-02	Position A-2 and A-4	CE, ALS
		1640867-08	Position A-2 and A-4	CE, ALS 3-A sanitary std
		3350026187	Alloy 254, Position A-2 and A-4	CE, ALS
		3350026188	Alloy 254, Position A-2 and A-4	CE, ALS 3-A sanitary std
67	Double corner, DN80	34504416-02	Position A-2 and A-4	CE, ALS
		3350026190	Alloy 254, Position A-2 and A-4	CE, ALS
68	Double corner, DN80	3350018219	(Extended) position A-1	CE, ALS
		3350026205	Alloy 254, (Extended) position A-1	CE, ALS
69	Double corner, DN80	3350018220	(Extended) position A-4	CE, ALS
		3350026206	Alloy 254, (Extended) position A-4	CE, ALS
70	Washer	223101-61	BRB 10.5 x 22 - 2343	
71	Nut	221803-29	ISO 4032 - M10 - A4-70	
72	Fitting, Ø51	1644805-03	CLAMP 51 NIPPLE	CE, ALS For through passage with 2" connection
	Gasket ring		Same as for FP and PP, see above.	
	Fitting		Same as for FP and PP, see above.	

Flange	Same as for FP and PP, see above.

Blind Connection

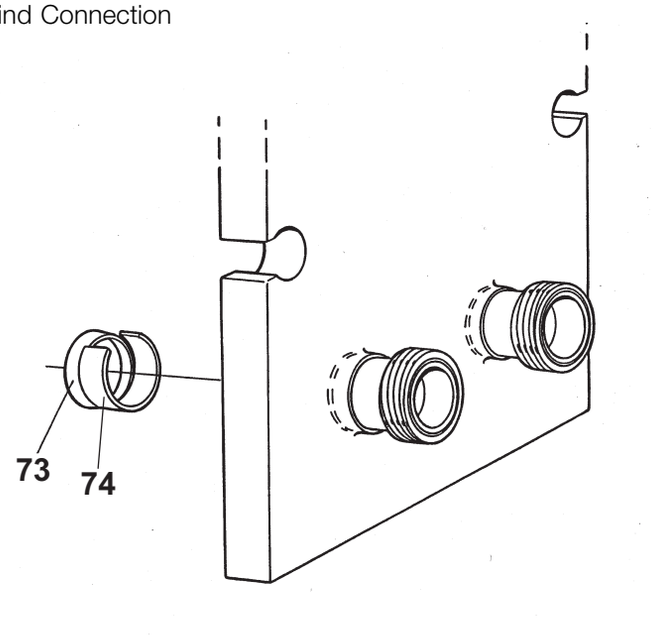

Drawing of blind connection.

Pos	*Denomination*	*AlfaLaval Part No*	*Specification*	*Comments*
73	Blind cover	1625309-03		CE For connection with connection pipe
		3350008455		CE For connection without connection pipe
		3350000864		ALS For connection with connection pipe
		3350000865		ALS For frame plate. For connection without connection pipe.
		3350000866		ALS For pressure plate. For connection without connection pipe.
74	Spring	32324-7909-2		CE For connection with connection pipe

Spare Parts Lists Front 8 -RD

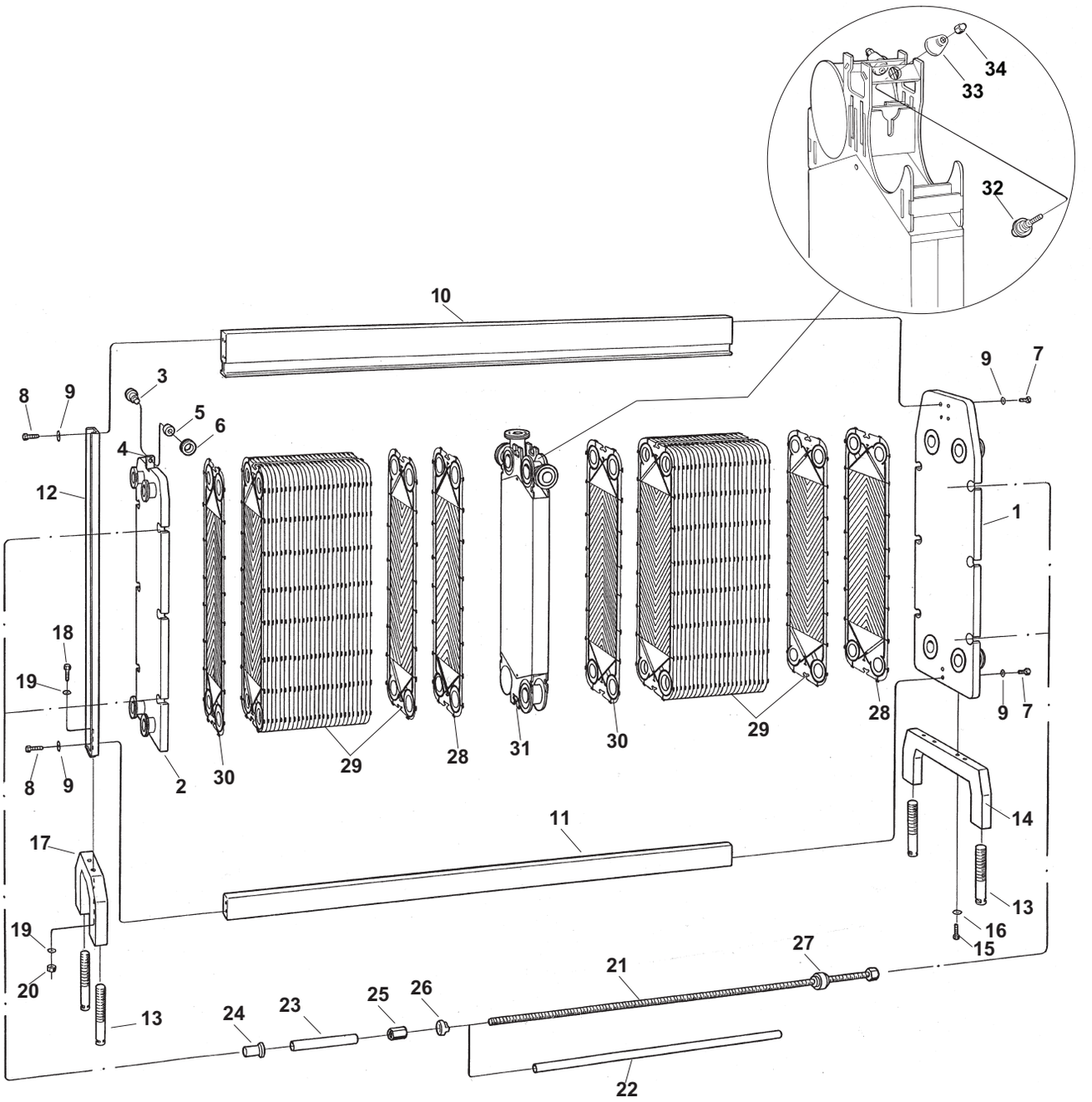

Exploded view of Front 8-RD.
11

Frame components

Pos	Denomination	AlfaLaval Part No	Specification	Comments
1	Frame plate	3350009234	Cladded, 4-holed	CE
		3350009235	Cladded, 2-holed S1+S4	CE
		3350009236	Cladded, 2-holed S2+S3	CE
2	Pressure plate	3350000749	Cladded, unholed	CE
		3350009243	Cladded, 4-holed	CE
		3350009244	Cladded, 2-holed T1+T4	CE
		3350009245	Cladded, 2-holed T2+T3	CE
3	Shaft	1620780-01		
4	Stop screw	260080-04	SK6SS 6x8-A4	
5	Needle bearing	528402-03	NKI 20/16 INA	
6	Wheel	1620781-01		
7	Screw	221046-38	ISO 4017 - M12 x 80 - A4-70	
8	Screw	221046-38	ISO 4017 - M12 x 80 - A4-70	For SC without foot (LC≤1800)
		221046-22	ISO 4017 - M12 x 35 - A4-70	For SC with foot (LC>1800)
9	Washer	223101-35	BRB 13 x 24 - 2343	
10	Carrying bar	1623150-01	L=1200	
		1623150-02	L=1800	
		1623150-03	L=2400	
		1623150-04	L=3000	
		1623150-05	L=3600	
		1623150-06	L= SPEC, max. 3600	
11	Guiding bar	32323-4001-2	L=1200	
		32323-4001-4	L=1800	
		32323-4001-6	L=2400	
		32323-4001-8	L=3000	
		32323-4002-1	L=3600	
		32323-4002-2	L= SPEC, max. 3600	
12	Support column	3350000815	Used without foot	For LC≤1800 in combination with low FP foot
		3350000817	Used without foot	For LC≤1800 in combination with high FP foot
		1640448-01		For LC>1800
		3350029742	Used without foot	For LC≤1800 in combination with low FP foot, 3-A sanitary std
		3350029740	Used without foot	For LC≤1800 in combination with high FP foot, 3-A sanitary std
13	Levelling screw	1640885-02	L=230, M39	For low foot
		1640885-01	L=280, M39	For high foot
		1640848-01	L=200, M30	For SC without foot (LC≤1800) in combination with low FP foot
		1640848-02	L=250, M30	For SC without foot (LC≤1800) in combination with high FP foot
14	Foot	3350000605	Low	
		1640548-01	High	
		3350029765	Low	3-A sanitary std
		3350029747	High	3-A sanitary std
15	Screw	2210463-02	ISO 4017 - M16 x 30 - A4-70	For low foot
		2210463-03	ISO 4017 - M16 x 40 - A4-70	For high foot
		2210463-14	ISO 4014 - M16 x 110 - A4-70	For low foot. Valid for 3-A sanitary std.
		2210463-15	ISO 4014 - M16 x 120 - A4-70	For high foot. Valid for 3-A sanitary std.
16	Washer	233101-37	BRB 17 x 30 - 2343	
17	Foot	3350000610	Low	For LC>1800
		1640551-01	High	For LC>1800
		3350029761	Low	For LC>1800, 3-A sanitary std
		3350029728	High	For LC>1800, 3-A sanitary std
18	Screw	2210463-02	ISO 4017 - M16 x 30 - A4-70	For low foot
		2210463-03	ISO 4017 - M16 x 40 - A4-70	For high foot
		2210463-14	ISO 4014 - M16 x 110 - A4-70	For low foot. Valid for 3-A sanitary std.
		2210463-15	ISO 4014 - M16 x 120 - A4-70	For high foot. Valid for 3-A sanitary std.
19	Washer	223101-37	BRB 17 x 30 - 2343	
20	Nut	221803-40	ISO 4032 - M16 - A4-70	
21	Tightening bolt	1624463-03	M30, L=1160	CE
		1624463-04	M30, L=1460	CE
		1624463-05	M30, L=1760	CE
		1624463-06	M30, L=2060	CE
		1624463-07	M30, L=2360	CE
		1624463-08	M30, L=2960	CE
		1624463-09	M30, L=3560	CE
		1624463-10	M30, L=SPEC.	CE
22	Protecting tube	1641358-03	L=964	For M30 bolt
		1641358-04	L=1264	For M30 bolt
		1641358-05	L=1564	For M30 bolt
		1641358-06	L=1864	For M30 bolt
		1641358-07	L=2164	For M30 bolt
		1641358-08	L=2764	For M30 bolt
		1641358-09	L=3364	For M30 bolt
		1641358-10	L=SPEC.	For M30 bolt

23	Plastic tube	1995-101-082	ID=32	For M30 bolt
24	Cap	1641360-04	M30	
25	Nut	1641668-03	M30	CE
26	Lock washer	32234-4897-1	M30	
27	Bearing box	1624157-01	M30	
28	End plate I			
29	Channel plates			
30	End plate II			
31	Connection plate	3350000470		CE
32	Bolt	1640386–01	Roller screw	
33	Dished washer	1640385-01		
34	Acron nut	1640387-01		
	Ratchet spanner	32220-3101-5	M30, NV46	Assembling tool
	Protection sheet		Available for the Plate Heat Exchanger, contact your local Alfa Laval Representative for more information on how to order.	
		3350000635	Sign	For protection sheet.

Connections

Connections in frame plate and pressure plate, Ø76

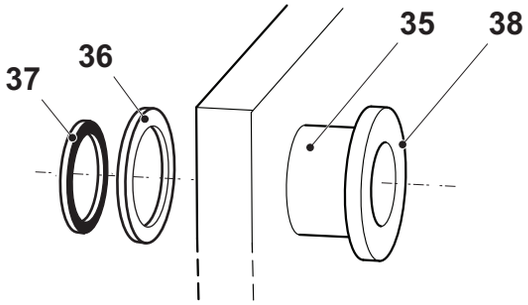

Drawing of connections, Ø76.1

Pos	Denomination	AlfaLaval Part No	Specification	Comments
35	Pipe	32324-7483-1		CE
36	Welding ring	3350008341		CE For frame plate
		3350008342		CE For pressure plate
37	Gasket ring	34505263-02	EPDMFF	For frame plate
		34505263-01	NBRFF	For frame plate
38	Fitting	1644793-05	SMS 76 MALE PART	CE
		3350019815	DIN 76 NW80 MALE PART, Inside tappered	CE
		1644805-05	CLAMP 76 NIPPLE	CE
		1644799-05	IDF 76 MALE PART	CE
		1644802-05	RJT 76 MALE PART	CE

Connections in frame plate and pressure plate, DN80

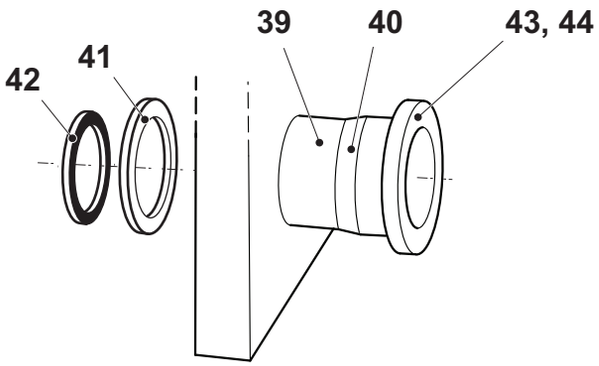

Drawing of connections, DN80

Pos	Denomination	AlfaLaval Part No	Specification	Comments
39	Pipe	32324-7483-1		CE
40	Pipe	34504429-01		CE
41	Welding ring	3350008341		CE For frame plate
		3350008342		CE For pressure plate
42	Gasket ring	34505263-02	EPDMFF	For frame plate
		34505263-01	NBRFF	For frame plate
43	Fitting	34503624-01	DIN 11864-1 DN80	CE
44	Flange	1626363-02	DIN 2633 DN80 PN16	CE

Connections in connection plate

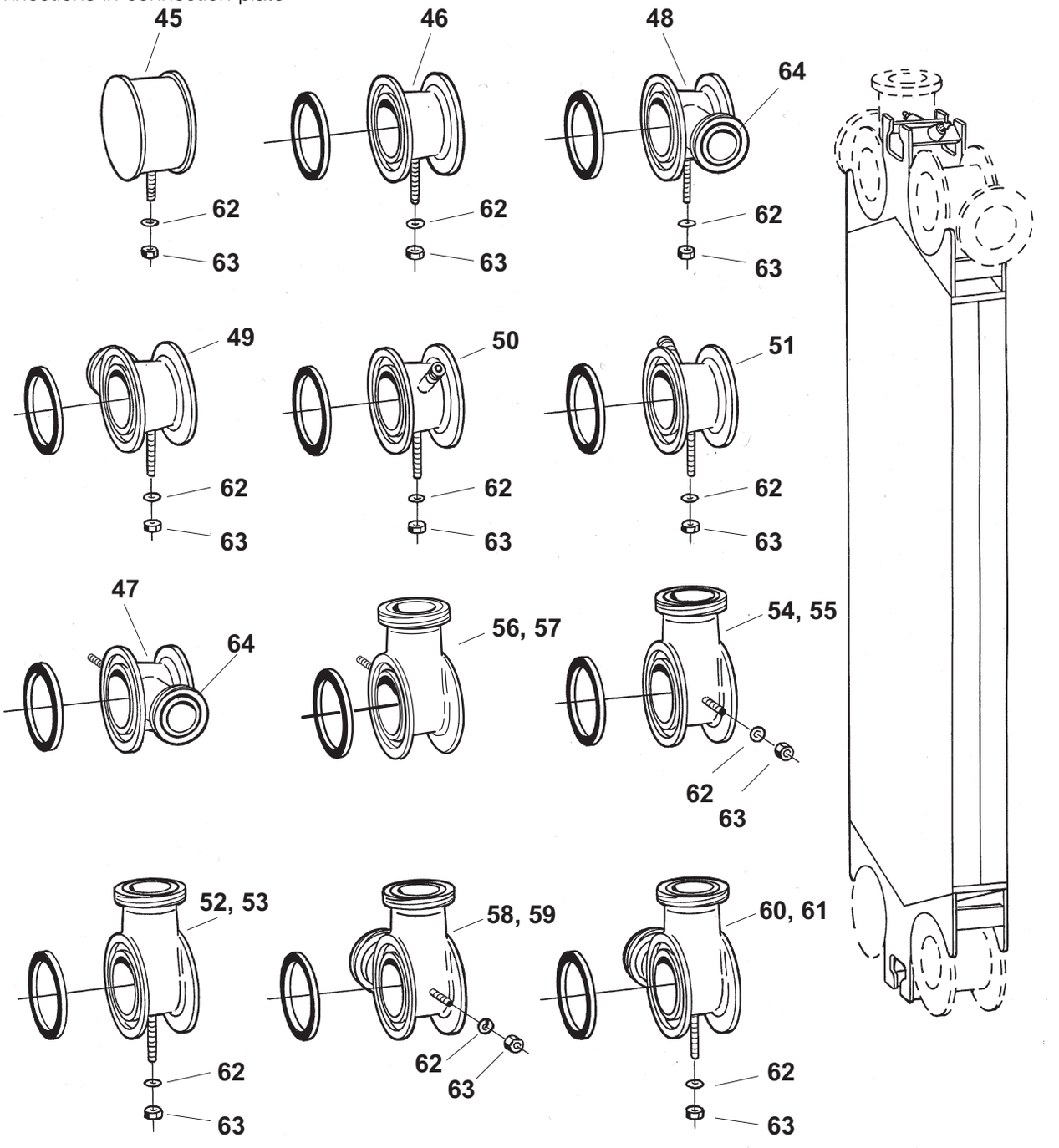

Drawing of connection plate corners.

Pos	Denomination	AlfaLaval Part No	Specification	Comments
45	Blind corner	1625304-04		CE
46	Through passage	1625318-01		CE
		1625318-02		CE 3-A sanitary std
47	Through passage with 2" connection	3350019844	Horizontal position	CE
		3350019846	Horizontal position	CE 3-A sanitary std
48	Through passage with 2" connection	1640864-01	Vertical position A-1 and A-3	CE
		1640864-03	Vertical position A-1 and A-3	CE 3-A sanitary std
49	Through passage with 2" connection	1640864-02	Vertical position A-2 and A-4	CE
		1640864-04	Vertical position A-2 and A-4	CE 3-A sanitary std
50	Through passage with dive tube	1640865-03	Position A-1 and A-3	CE
51	Through passage with dive tube	1640865-04	Position A-2 and A-4	CE
52	Single corner	1640866-02	Horizontal all positions	CE
		1640866-07	Horizontal all positions	CE 3-A sanitary std
53	Single corner, DN80	34504415-02	Horizontal all positions	CE
54	Single corner	1640866-01	Vertical position A-1,A-3 if bottom towards frame plate, otherwise A-2,A-4	CE
		1640866-06	Vertical position A-1,A-3 if bottom towards frame plate, otherwise A-2,A-4	CE 3-A sanitary std
55	Single corner, DN80	34504415-01	Vertical position A-1,A-3 if bottom towards frame plate, otherwise A-2,A-4	CE
56	Single corner	1640866-03	Vertical position A-2,A-4 if bottom towards frame plate, otherwise A-1,A-3	CE
		1640866-08	Vertical position A-2,A-4 if bottom towards frame plate, otherwise A-1,A-3	CE 3-A sanitary std
57	Single corner, DN80	34504415-03	Vertical position A-2,A-4 if bottom towards frame plate, otherwise A-1,A-3	CE
58	Double corner	1640867-01	Position A-1 and A-3	CE
		1640867-07	Position A-1 and A-3	CE 3-A sanitary std
59	Double corner, DN80	34504416-01	Position A-1 and A-3	CE
60	Double corner	1640867-02	Position A-2 and A-4	CE
		1640867-08	Position A-2 and A-4	CE 3-A sanitary std
61	Double corner, DN80	34504416-02	Position A-2 and A-4	CE
62	Washer	223101-61	BRB 10.5 x 22 - 2343	
63	Nut	221803-29	ISO 4032 - M10 - A4-70	
64	Fitting, Ø51	1644805-03	CLAMP 51 NIPPLE	CE For through passage with 2" connection
	Gasket ring		Same as for FP and PP, see above.	
	Fitting		Same as for FP and PP, see above.	
	Flange		Same as for FP and PP, see above.	

Spare Parts Lists Front 10 RM-

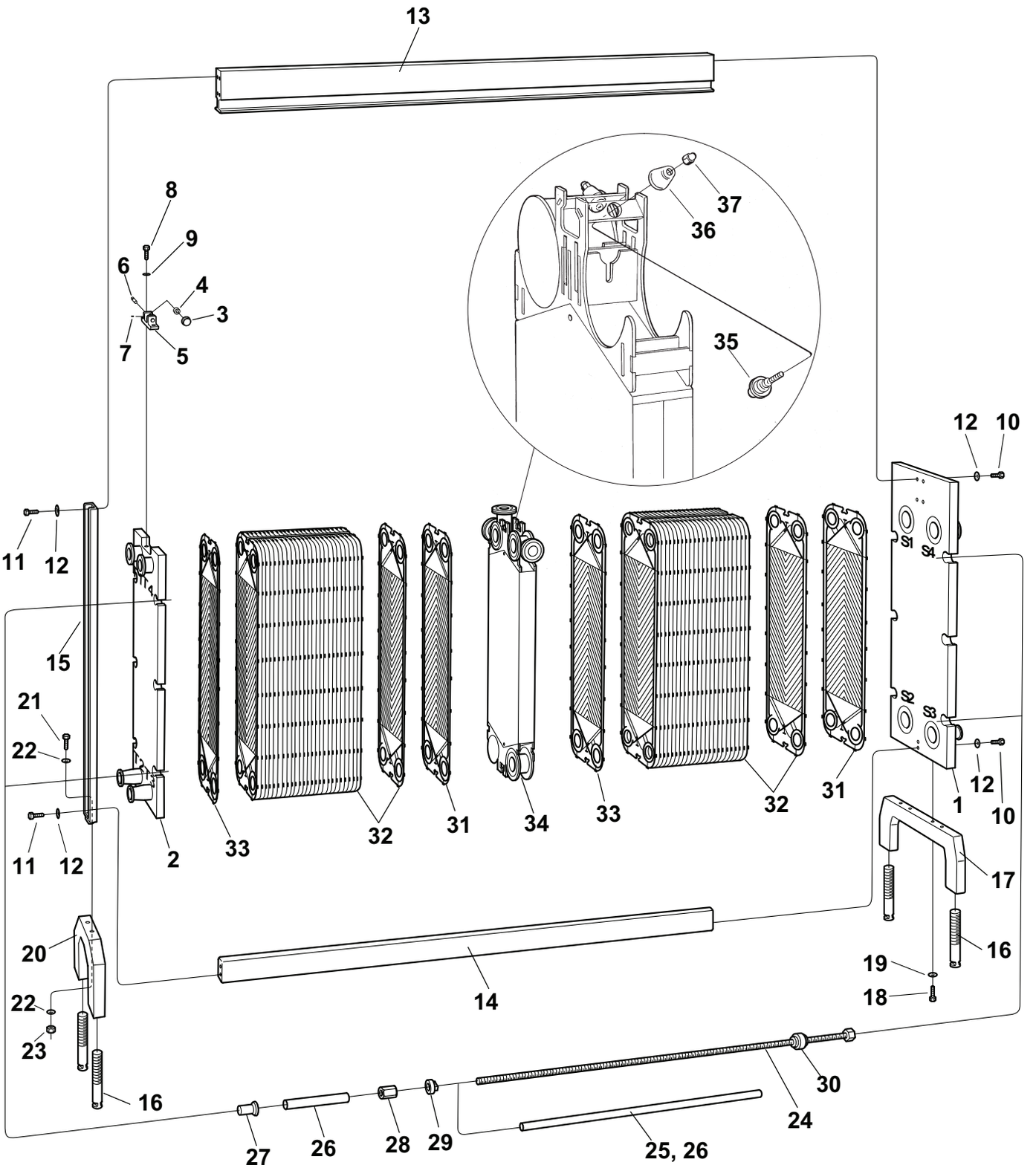

Exploded view of Front10-RM.

12

Frame components

Pos	Denomination	AlfaLaval Part No	Specification	Comments
1	Frame plate	3350010992	4-holed	CE
		3350010993	2-holed S1 S4	CE
		3350010994	2-holed S2 S3	CE
		3350001407	4-holed	ALS
		3350001409	2-holed S1 S4	ALS
		3350001411	2-holed S2 S3	ALS
2	Pressure plate	3350011165	Unholed	CE
		3350011004	4-holed	CE
		3350011006	2-holed T1 T4	CE
		3350011008	2-holed T2 T3	CE
		3350001608	Unholed	ALS
		3350001413	4-holed	ALS
		3350001415	2-holed T1 T4	ALS
		3350001417	2-holed T2 T3	ALS
3	Wheel	82300049-01		
4	Needle bearing	528402-03	Brand: INA Type: Needle roller bearing NKI 20/16-XL	
5	Bracket	3350001678		
6	Shaft	1620780-01		
7	Stop screw	260080-04	SK6SS 6x8-A4	
8	Screw	260192-06	ISO 4017 - M20 x 45 - A4-70	
9	Washer	223101-39	BRB 21 x 37 - 2343	
10	Screw	221046-12	ISO 4014 - M12 x 80 - A4-70	
11	Screw	221046-30	ISO 4017 - M12 x 40 - A4-70	
12	Washer	223101-35	BRB 13 x 24 - 2343	
13	Carrying bar	1623169-01	L=1200	
		1623169-02	L=1800	
		1623169-03	L=2400	
		1623169-07	L=SPEC, max. 4200	
		34508675-01	Cladded, L=1200	
		34508675-02	Cladded, L=1800	
		34508675-03	Cladded, L=2400	
		34508675-07	Cladded, L=SPEC, max. 4200	
14	Guiding bar	32323-4001-2	L=1200	
		32323-4001-4	L=1800	
		32323-4001-6	L=2400	
		32323-4002-2	L=SPEC, max. 4200	
15	Supporting column	1640448-02		
16	Levelling screw	1640885-02	L=230, M39	For low foot
		1640885-01	L=280, M39	For high foot
17	Foot	1640539-01	Low	
		1640884-01	High	
18	Screw	260192-06	ISO 4017 - M20 x 45 - A4-70	
19	Washer	223101-39	BRB 21 x 37 - 2343	
20	Foot	1640445-01	Low	
		1640551-01	High	
21	Screw	2210463-03	ISO 4017 - M16 x 40 - A4-70	
22	Washer	223101-37	BRB 17 x 30 - 2343	
23	Nut	221803-40	ISO 4032 - M16 - A4-70	
24	Tightening bolt	1624463-03	M30, L=1160	CE, ALS
		1624463-04	M30, L=1460	CE, ALS
		1624463-05	M30, L=1760	CE, ALS
		1624463-06	M30, L=2060	CE, ALS
		1624463-07	M30, L=2360	CE, ALS
		1624463-10	M30, L=SPEC.	CE, ALS
25	Plastic tube	1995-101-082	ID=32	For M30 bolt
26	Protecting tube	1641358-03	L=964	For M30 bolt
		1641358-04	L=1264	For M30 bolt
		1641358-05	L=1564	For M30 bolt
		1641358-06	L=1864	For M30 bolt
		1641358-07	L=2164	For M30 bolt
		1641358-10	L=SPEC.	For M30 bolt
27	Cap	1641360-04	M30	
28	Nut	1641668-02	M30	CE, ALS
29	Lock washer	32234-4897-1		
30	Bearing box	1624157-01	M30	
31	End plate I			
32	Channel plates			
33	End plate II			
34	Connection plate	3350001099		CE, ALS
35	Bolt	1640386-02	Roller screw	
36	Dished washer	1641849-01		

37	Acron nut	1640387-01		
	Ratchet spanner	32220-3101-5	M30, NV46	Assembling tool
	Protecting sheet		Available for the Plate Heat Exchanger, contact your local Alfa Laval Representative for more information on how to order.	
		3350000635	Sign	For protecting sheet.

Connections

Connections in frame plate and pressure plate

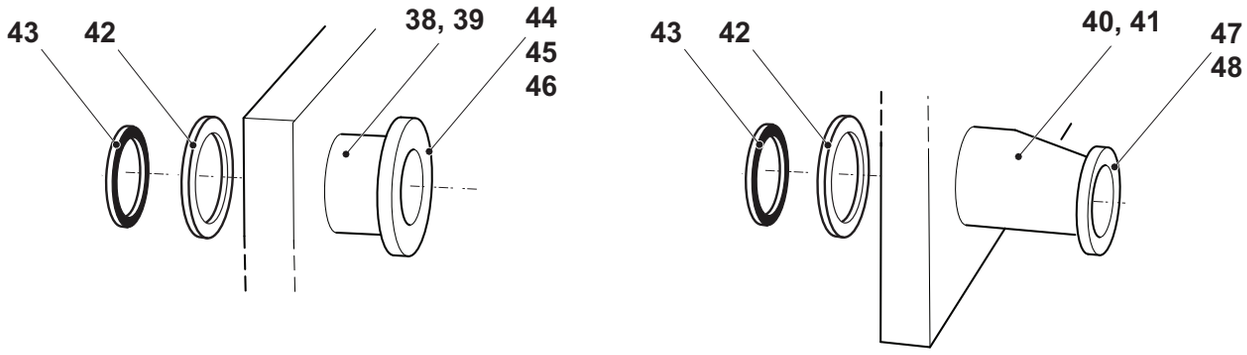

Drawing of connections in frame plate and pressure plate.

Pos	Denomination	AlfaLaval Part No	Specification	Comments
38	Pipe, Ø101	1625369-01		CE, ALS
		1625369-02		CE, ALS 3-A sanitary std
		3350026394	Alloy 254	CE
		3350026395	Alloy 254	CE 3-A sanitary std
39	Pipe, DN100	34504420-01		CE, ALS
		34504420-02		CE, ALS 3-A sanitary std
		3350026398	Alloy 254	CE
		3350026399	Alloy 254	CE 3-A sanitary std
40	Pipe, Ø76	3350006408	Eccentric reduction Ø101.6 • Ø76.1	CE, ALS
		3350006410	Eccentric reduction Ø101.6 • Ø76.1	CE, ALS 3-A sanitary std
41	Pipe, DN80	3350006409	Eccentric reduction Ø101.6 • DN80	CE, ALS
		3350006411	Eccentric reduction Ø101.6 • DN80	CE, ALS 3-A sanitary std
42	Welding ring	3350010972		CE For frame plate
		3350026390	Alloy 254	CE For frame plate
		3350010973		CE For pressure plate
		3350026400	Alloy 254	CE For pressure plate
43	Gasket ring	3350003902	EPDMFF	For frame plate
		3350003901	NBRFF	For frame plate
44	Fitting, Ø101	1644793-06	SMS 101 MALE PART	CE, ALS
		1644796-06	DIN 101 NW100 MALE PART	CE, ALS
		1644799-06	IDF 101 MALE PART	CE, ALS
		1644802-06	RJT 101 MALE PART	CE, ALS
		1644805-06	CLAMP 101 NIPPLE	CE, ALS
		3350026210	Alloy 254, SMS 101 MALE PART	CE, ALS
		3350026214	Alloy 254, DIN 101 NW100 MALE PART	CE, ALS
		3350026219	Alloy 254, CLAMP 101 NIPPLE	CE, ALS
45	Fitting, DN100	34503623-01	DIN 11864-1 DN100	CE, ALS
46	Flange, DN100	3350017922	DIN 11864-2 DN100	CE
		3350018011	FG1 PN10 DN100	CE
		3350018007	FN1 PN10 DN100	CE
		3350026307	Alloy 254, DIN 11864-2 DN100	CE
47	Fitting, Ø76	1644793-05	SMS 76 MALE PART	CE, ALS
		34503161-01	DIN 76 NW80 MALE PART, Inside tappered	CE, ALS
		1644799-05	IDF 76 MALE PART	CE, ALS
		1644802-05	RJT 76 MALE PART	CE, ALS
		1644805-05	CLAMP 76 NIPPLE	CE, ALS
		3350026151	Alloy 254, SMS 76 MALE PART	CE, ALS
		3350026215	Alloy 254, DIN 76 NW80 MALE PART, Inside tappered	CE, ALS
		3350026147	Alloy 254, CLAMP 76 NIPPLE	CE, ALS
48	Fitting, DN80	34503624-01	DIN 11864-1 DN80	CE, ALS

Connections in connection plate

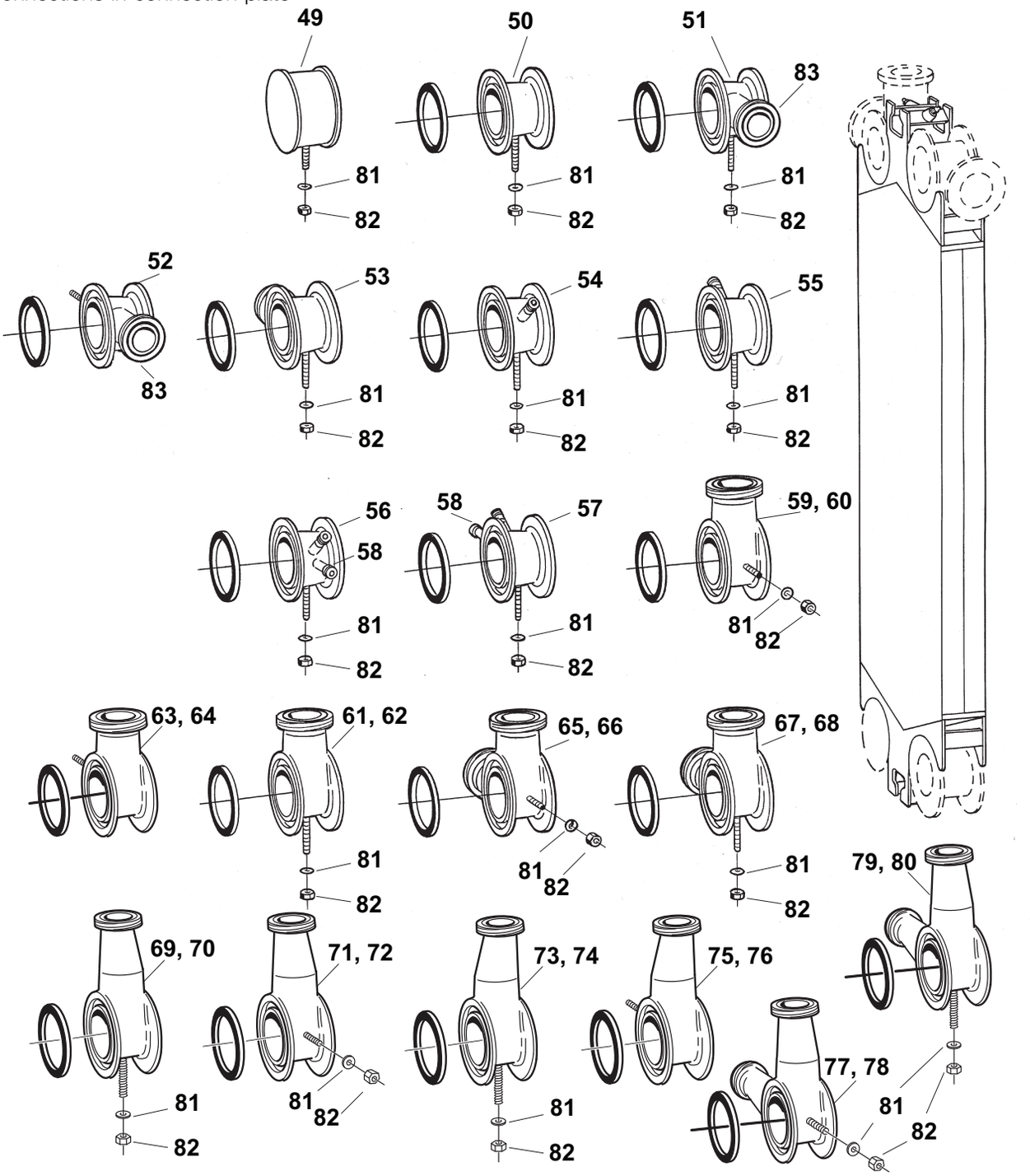

Drawing of connection plate corners.

Pos	Denomination	AlfaLaval Part No	Specification	Comments
49	Blind corner	1625368-01		CE, ALS
50	Through passage	1625378-01		CE, ALS
		1625378-02		CE, ALS 3-A sanitary std
		3350026402	Alloy 254	CE, ALS
		3350026403	Alloy 254	CE, ALS 3-A sanitary std
51	Through passage with 2" connection	1641863-01	Vertical position A-1 and A-3	CE, ALS
		1641863-03	Vertical position A-1 and A-3	CE, ALS 3-A sanitary std
52	Through passage with 2" connection	3350019900	Horizontal position	CE, ALS
		3350019901	Horizontal position	CE, ALS 3-A sanitary std
53	Through passage with 2" connection	1641863-02	Vertical position A-2 and A-4	CE, ALS
		1641863-04	Vertical position A-2 and A-4	CE, ALS 3-A sanitary std
54	Through passage with dive tube	1641864-01	Position A-1 and A-3	CE, ALS
55	Through passage with dive tube	1641864-02	Position A-2 and A-4	CE, ALS
56	Through passage with dive tube and ventilating valve	1641865-01	Position A-1	CE, ALS
57	Through passage with dive tube and ventilating valve	1641865-02	Position A-4	CE, ALS
58	Valve	31350-0020-1	R 3/4"	CE, ALS
59	Single corner, Ø101	1641861-01	Vertical position A-1,A-3 if bottom towards frame plate, otherwise A-2,A-4	CE, ALS
		1641861-07	Vertical position A-1,A-3 if bottom towards frame plate, otherwise A-2,A-4	CE, ALS 3-A sanitary std
		3350026412	Alloy 254, Vertical position A-1,A-3 if bottom towards frame plate, otherwise A-2,A-4	CE, ALS
		3350026415	Alloy 254, Vertical position A-1,A-3 if bottom towards frame plate, otherwise A-2,A-4	CE, ALS 3-A sanitary std
60	Single corner, DN100	34504421-01	Vertical position A-1,A-3 if bottom towards frame plate, otherwise A-2,A-4	CE, ALS
		34504421-07	Vertical position A-1,A-3 if bottom towards frame plate, otherwise A-2,A-4	CE, ALS 3-A sanitary std
		3350026431	Alloy 254, Vertical position A-1,A-3 if bottom towards frame plate, otherwise A-2,A-4	CE, ALS
		3350026434	Alloy 254, Vertical position A-1,A-3 if bottom towards frame plate, otherwise A-2,A-4	CE, ALS 3-A sanitary std
61	Single corner, Ø101	1641861-02	Horizontal all positions	CE, ALS
		1641861-08	Horizontal all positions	CE, ALS 3-A sanitary std
		3350026413	Alloy 254, Horizontal all positions	CE, ALS
		3350026416	Alloy 254, Horizontal all positions	CE, ALS 3-A sanitary std
62	Single corner, DN100	34504421-02	Horizontal all positions	CE, ALS
		34504421-08	Horizontal all positions	CE, ALS 3-A sanitary std
		3350026432	Alloy 254, Horizontal all positions	CE, ALS
		3350026435	Alloy 254, Horizontal all positions	CE, ALS 3-A sanitary std
63	Single corner, Ø101	1641861-03	Vertical position A-2,A-4 if bottom towards frame plate, otherwise A-1,A-3	CE, ALS
		1641861-09	Vertical position A-2,A-4 if bottom towards frame plate, otherwise A-1,A-3	CE, ALS 3-A sanitary std
		3350026414	Alloy 254, Vertical position A-2,A-4 if bottom towards frame plate, otherwise A-1,A-3	CE, ALS
		3350026417	Alloy 254, Vertical position A-2,A-4 if bottom towards frame plate, otherwise A-1,A-3	CE, ALS 3-A sanitary std
64	Single corner, DN100	34504421-03	Vertical position A-2,A-4 if bottom towards frame plate, otherwise A-1,A-3	CE, ALS
		34504421-09	Vertical position A-2,A-4 if bottom towards frame plate, otherwise A-1,A-3	CE, ALS 3-A sanitary std
		3350026433	Alloy 254, Vertical position A-2,A-4 if bottom towards frame plate, otherwise A-1,A-3	CE, ALS
		3350026436	Alloy 254, Vertical position A-2,A-4 if bottom towards frame plate, otherwise A-1,A-3	CE, ALS 3-A sanitary std
65	Double corner, Ø101	1641862-01	Position A-1 and A-3	CE, ALS
		1641862-05	Position A-1 and A-3	CE, ALS 3-A sanitary std
		3350026420	Alloy 254, Position A-1 and A-3	CE, ALS
		3350026422	Alloy 254, Position A-1 and A-3	CE, ALS 3-A sanitary std
66	Double corner, DN100	34504422-01	Position A-1 and A-3	CE, ALS
		34504422-05	Position A-1 and A-3	CE, ALS 3-A sanitary std
		3350026437	Alloy 254, Position A-1 and A-3	CE, ALS
		3350026439	Alloy 254, Position A-1 and A-3	CE, ALS 3-A sanitary std
67	Double corner, Ø101	1641862-02	Position A-2 and A-4	CE, ALS
		1641862-06	Position A-2 and A-4	CE, ALS 3-A sanitary std
		3350026421	Alloy 254, Position A-2 and A-4	CE, ALS
		3350026423	Alloy 254, Position A-2 and A-4	CE, ALS 3-A sanitary std
68	Double corner, DN100	34504422-02	Position A-2 and A-4	CE, ALS
		34504422-06	Position A-2 and A-4	CE, ALS 3-A sanitary std
		3350026438	Alloy 254, Position A-2 and A-4	CE, ALS
		3350026440	Alloy 254, Position A-2 and A-4	CE, ALS 3-A sanitary std

69	Single corner, Ø76	3350006295	Horizontal position A-2,A-4 if bottom towards frame plate, otherwise A-1,A-3	CE, ALS
		3350006299	Horizontal position A-2,A-4 if bottom towards frame plate, otherwise A-1,A-3	CE, ALS 3-A sanitary std
70	Single corner, DN80	3350006330	Horizontal position A-2,A-4 if bottom towards frame plate, otherwise A-1,A-3	CE, ALS
		3350006334	Horizontal position A-2,A-4 if bottom towards frame plate, otherwise A-1,A-3	CE, ALS 3-A sanitary std
71	Single corner, Ø76	3350006296	Vertical position A-1,A-3 if bottom towards frame plate, otherwise A-2,A-4	CE, ALS
		3350006300	Vertical position A-1,A-3 if bottom towards frame plate, otherwise A-2,A-4	CE, ALS 3-A sanitary std
72	Single corner, DN80	3350006331	Vertical position A-1,A-3 if bottom towards frame plate, otherwise A-2,A-4	CE, ALS
		3350006335	Vertical position A-1,A-3 if bottom towards frame plate, otherwise A-2,A-4	CE, ALS 3-A sanitary std
73	Single corner, Ø76	3350006297	Horizontal position A-1,A-3 if bottom towards frame plate, otherwise A-2,A-4	CE, ALS
		3350006301	Horizontal position A-1,A-3 if bottom towards frame plate, otherwise A-2,A-4	CE, ALS 3-A sanitary std
74	Single corner, DN80	3350006332	Horizontal position A-1,A-3 if bottom towards frame plate, otherwise A-2,A-4	CE, ALS
		3350006336	Horizontal position A-1,A-3 if bottom towards frame plate, otherwise A-2,A-4	CE, ALS 3-A sanitary std
75	Single corner, Ø76	3350006298	Vertical position A-2,A-4 if bottom towards frame plate, otherwise A-1,A-3	CE, ALS
		3350006302	Vertical position A-2,A-4 if bottom towards frame plate, otherwise A-1,A-3	CE, ALS 3-A sanitary std
76	Single corner, DN80	3350006333	Vertical position A-2,A-4 if bottom towards frame plate, otherwise A-1,A-3	CE, ALS
		3350006337	Vertical position A-2,A-4 if bottom towards frame plate, otherwise A-1,A-3	CE, ALS 3-A sanitary std
77	Double corner, Ø76	3350006360	Position A-1 and A-3	CE, ALS
		3350006362	Position A-1 and A-3	CE, ALS 3-A sanitary std
78	Double corner, DN80	3350006364	Position A-1 and A-3	CE, ALS
		3350006366	Position A-1 and A-3	CE, ALS 3-A sanitary std
79	Double corner, Ø76	3350006361	Position A-2 and A-4	CE, ALS
		3350006363	Position A-2 and A-4	CE, ALS 3-A sanitary std
80	Double corner, DN80	3350006365	Position A-2 and A-4	CE, ALS
		3350006367	Position A-2 and A-4	CE, ALS 3-A sanitary std
81	Washer	223101-61	BRB 10.5 x 22 - 2343	
82	Nut	221803-29	ISO 4032 - M10 - A4-70	
83	Fitting, Ø51	1644793-03	SMS 51 MALE PART	CE, ALS For through passage with 2" connection
		1644796-03	DIN 51 MALE PART	CE, ALS For through passage with 2" connection
		1644799-03	IDF 51 MALE PART	CE, ALS For through passage with 2" connection
		1644802-03	RJT 51 MALE PART	CE, ALS For through passage with 2" connection
		1644805-03	CLAMP 51 NIPPLE	CE, ALS For through passage with 2" connection
	Gasket ring		Same as for FP and PP, see above.	
	Fitting		Same as for FP and PP, see above.	
	Flange		Same as for FP and PP, see above.	

Blind connection

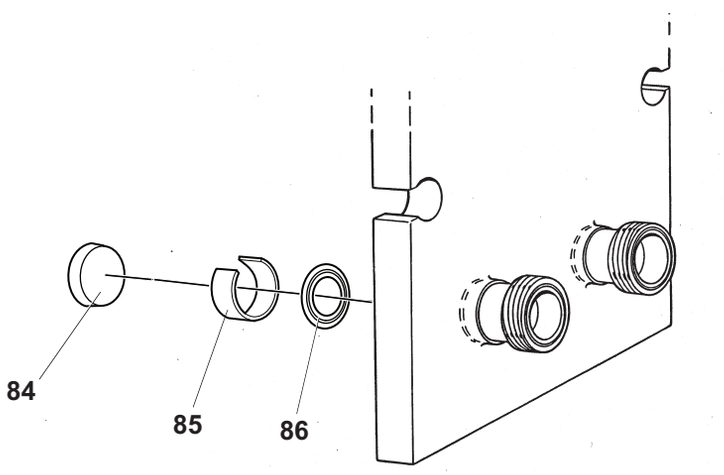

Drawing of blind connection.

Pos	Denomination	AlfaLaval Part No	Specification	Comments
84	Blind cover	3350019754		CE For connection without connection pipe (FP side)
		1625345-01		CE For connection with connection pipe
		3350002333		ALS For connection without connection pipe
		3350002334		ALS For connection with connection pipe
		3350041066		CE For connection without connection pipe (PP side)
85	Spring	32324-7909-1		CE For connection with connection pipe
86	Gasket ring	3350003902	EPDMFF	For frame plate

Spare Parts Lists Front 10 -RH

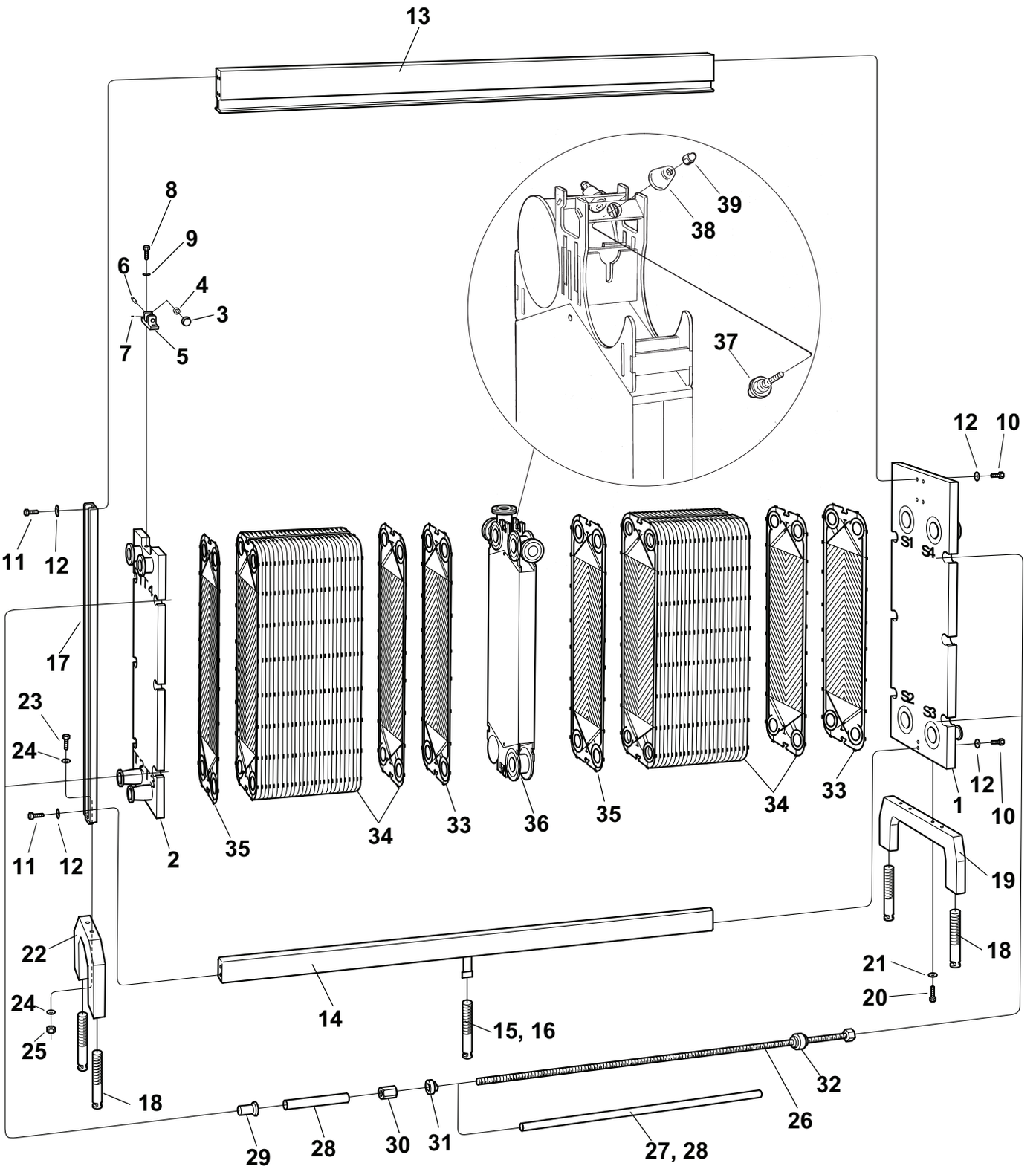

Exploded view of Front10-RH.
10

Frame components

Pos	Denomination	AlfaLaval Part No	Specification	Comments
1	Frame plate	3350011357	4-holed	CE
		3350011358	2-holed S1 S4	CE
		3350011359	2-holed S2 S3	CE
		3350001529	4-holed	ALS
		3350001531	2-holed S1 S4	ALS
		3350001533	2-holed S2 S3	ALS
2	Pressure plate	3350011367	Unholed	CE
		3350011364	4-holed	CE
		3350011365	2-holed T1 T4	CE
		3350011366	2-holed T2 T3	CE
		3350001610	Unholed	ALS
		3350001535	4-holed	ALS
		3350001537	2-holed T1 T4	ALS
		3350001539	2-holed T2 T3	ALS
3	Wheel	82300049-01		
4	Needle bearing	528402-03	Brand: INA Type: Needle roller bearing NKI 20/16-XL	
5	Bracket	3350001678		
6	Shaft	1620780-01		
7	Stop screw	260080-04	SK6SS 6x8-A4	
8	Screw	260192-06	ISO 4017 - M20 x 45 - A4-70	
9	Washer	223101-39	BRB 21 x 37 - 2343	
10	Screw	221046-38	ISO 4017 - M12 x 80 - A4-70	
11	Screw	221046-30	ISO 4017 - M12 x 40 - A4-70	
12	Washer	223101-35	BRB 13 x 24 - 2343	
13	Carrying bar	1623169-01	L=1200	
		1623169-02	L=1800	
		1623169-03	L=2400	
		1623169-04	L=3000	
		1623169-05	L=3600	
		1623169-06	L=4200	
		1623169-07	L=SPEC, max. 4200	
		1623203-01	L=4800	
		1623203-02	L=5400	
		34508675-01	Cladded, L=1200	
		34508675-02	Cladded, L=1800	
		34508675-03	Cladded, L=2400	
		34508675-04	Cladded, L=3000	
		34508675-05	Cladded, L=3600	
		34508675-06	Cladded, L=4200	
		34508675-07	Cladded, L=SPEC, max. 4200	
14	Guiding bar	32323-4001-2	L=1200	
		32323-4001-4	L=1800	
		32323-4001-6	L=2400	
		32323-4001-8	L=3000	
		32323-4002–1	L=3600	
		32323-4002–3	L=4200	
		32323-4002–2	L=SPEC, max. 4200	
		32323-4017-3	L=4800, incl. foot	
		32323-4017-4	L=5400, incl. foot	
15	Levelling screw	1640885-01	L=280, M39	For guiding bar with foot. Valid for low foot.
		1640885-03	L=565, M39	For guiding bar with foot. Valid for high foot.
16	Protecting tube	32326-1231-1		For guiding bar with foot
17	Supporting column	1640448-02		
18	Levelling screw	1640885-02	L=230, M39	For low foot
		1640885-01	L=280, M39	For high foot
19	Foot	1640539-01	Low	
		1640884-01	High	
20	Screw	260192-06	ISO 4017 - M20 x 45 - A4-70	
21	Washer	223101-39	BRB 21 x 37 - 2343	
22	Foot	1640445-01	Low	
		1640551-01	High	
23	Screw	2210463-03	ISO 4017 - M16 x 40 - A4-70	
24	Washer	223101-37	BRB 17 x 30 - 2343	
25	Nut	221803-40	ISO 4032 - M16 - A4-70	
26	Tightening bolt	1624462-01	M39, L=1160	CE, ALS
		1624462-02	M39, L=1460	CE, ALS
		1624462-03	M39, L=1760	CE, ALS
		1624462-04	M39, L=2060	CE, ALS
		1624462-05	M39, L=2360	CE, ALS
		1624462-06	M39, L=2960	CE, ALS
		1624462-07	M39, L=3560	CE, ALS
		1624462-08	M39, L=4160	CE, ALS
		1624462-09	M39, L=4760	CE, ALS
		1624462-11	M39, L=5360	CE, ALS
		1624462-10	M39, L=SPEC.	CE, ALS

27	Plastic tube	1995-101-079	ID=41	For M39 bolt
28	Protecting tube	1641359-01	L=915	For M39 bolt
		1641359-02	L=1215	For M39 bolt
		1641359-03	L=1515	For M39 bolt
		1641359-04	L=1815	For M39 bolt
		1641359-05	L=2115	For M39 bolt
		1641359-06	L=2715	For M39 bolt
		1641359-07	L=3315	For M39 bolt
		1641359-08	L=3915	For M39 bolt
		1641359-09	L=4515	For M39 bolt
		1641359-11	L=5115	For M39 bolt
		1641359-10	L=SPEC.	For M39 bolt
29	Cap	1641360-05	M39	
30	Nut	1641669-01	M39	CE, ALS
31	Lock washer	32324-2915-1		
32	Bearing box	1624161-01	M39	
33	End plate I			
34	Channel plates			
35	End plate II			
36	Connection plate	3350001099		CE, ALS
37	Bolt	1640386-02	Roller screw	
38	Dished washer	1641849-01		
39	Acron nut	1640387-01		
	Ratchet spanner	32220-3101-7	M39, NV60	Assembling tool
	Protection sheet		Available for the Plate Heat Exchanger, contact your local Alfa Laval Representative for more information on how to order.	
		3350000635	Sign	For protection sheet.

Connections

Connections in frame plate and pressure plate

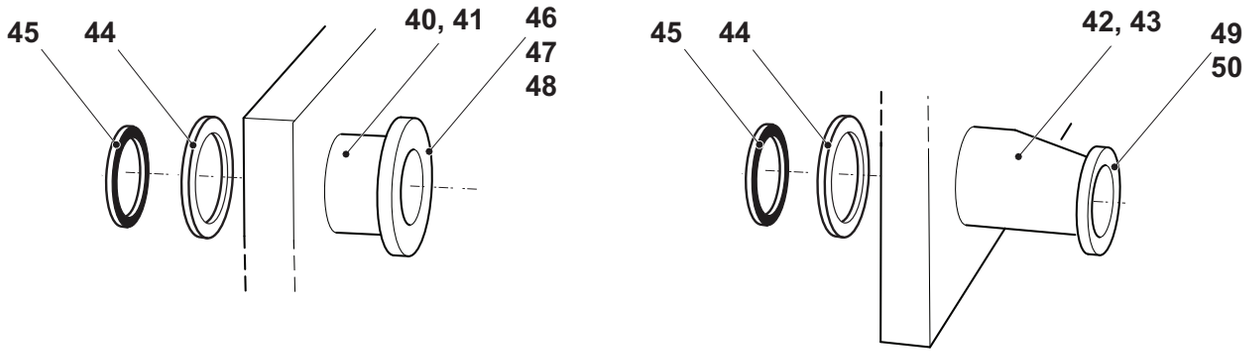

Drawing of connections in frame plate and pressure plate.

Pos	Denomination	AlfaLaval Part No	Specification	Comments
40	Pipe, Ø101	1625369-01		CE, ALS
		1625369-02		CE, ALS 3-A sanitary std
		3350026394	Alloy 254	CE
		3350026395	Alloy 254	CE 3-A sanitary std
41	Pipe, DN100	34504420-01		CE, ALS
		34504420-02		CE, ALS 3-A sanitary std
		3350026398	Alloy 254	CE
		3350026399	Alloy 254	CE 3-A sanitary std
42	Pipe, Ø76	3350006408	Eccentric reduction Ø101.6 • Ø76.1	CE, ALS
		3350006410	Eccentric reduction Ø101.6 • Ø76.1	CE, ALS 3-A sanitary std
43	Pipe, DN80	3350006409	Eccentric reduction Ø101.6 • DN80	CE, ALS
		3350006411	Eccentric reduction Ø101.6 • DN80	CE, ALS 3-A sanitary std
44	Welding ring	3350010972		CE For frame plate
		3350026390	Alloy 254	CE For frame plate
		3350010973		CE For pressure plate
		3350026400	Alloy 254	CE For pressure plate
45	Gasket ring	3350003902	EPDMFF	For frame plate
		3350003901	NBRFF	For frame plate
46	Fitting, Ø101	1644793-06	SMS 101 MALE PART	CE, ALS
		1644796-06	DIN 101 NW100 MALE PART	CE, ALS
		1644799-06	IDF 101 MALE PART	CE, ALS
		1644802-06	RJT 101 MALE PART	CE, ALS
		1644805-06	CLAMP 101 NIPPLE	CE, ALS
		3350026210	Alloy 254, SMS 101 MALE PART	CE, ALS
		3350026214	Alloy 254, DIN 101 NW100 MALE PART	CE, ALS
		3350026219	Alloy 254, CLAMP 101 NIPPLE	CE, ALS
47	Fitting, DN100	34503623-01	DIN 11864-1 DN100	CE, ALS
48	Flange, DN100	3350017922	DIN 11864-2 DN100	CE, ALS
		3350026307	Alloy 254, DIN 11864-2 DN100	CE, ALS
49	Fitting, Ø76	1644793-05	SMS 76 MALE PART	CE, ALS
		34503161-01	DIN 76 NW80 MALE PART, Inside tappered	CE, ALS
		1644799-05	IDF 76 MALE PART	CE, ALS
		1644802-05	RJT 76 MALE PART	CE, ALS
		1644805-05	CLAMP 76 NIPPLE	CE, ALS
		3350026151	Alloy 254, SMS 76 MALE PART	CE, ALS
		3350026215	Alloy 254, DIN 76 NW80 MALE PART, Inside tappered	CE, ALS
		3350026147	Alloy 254, CLAMP 76 NIPPLE	CE, ALS
50	Fitting, DN80	34503624-01	DIN 11864-1 DN80	CE, ALS

Connections in connection plate

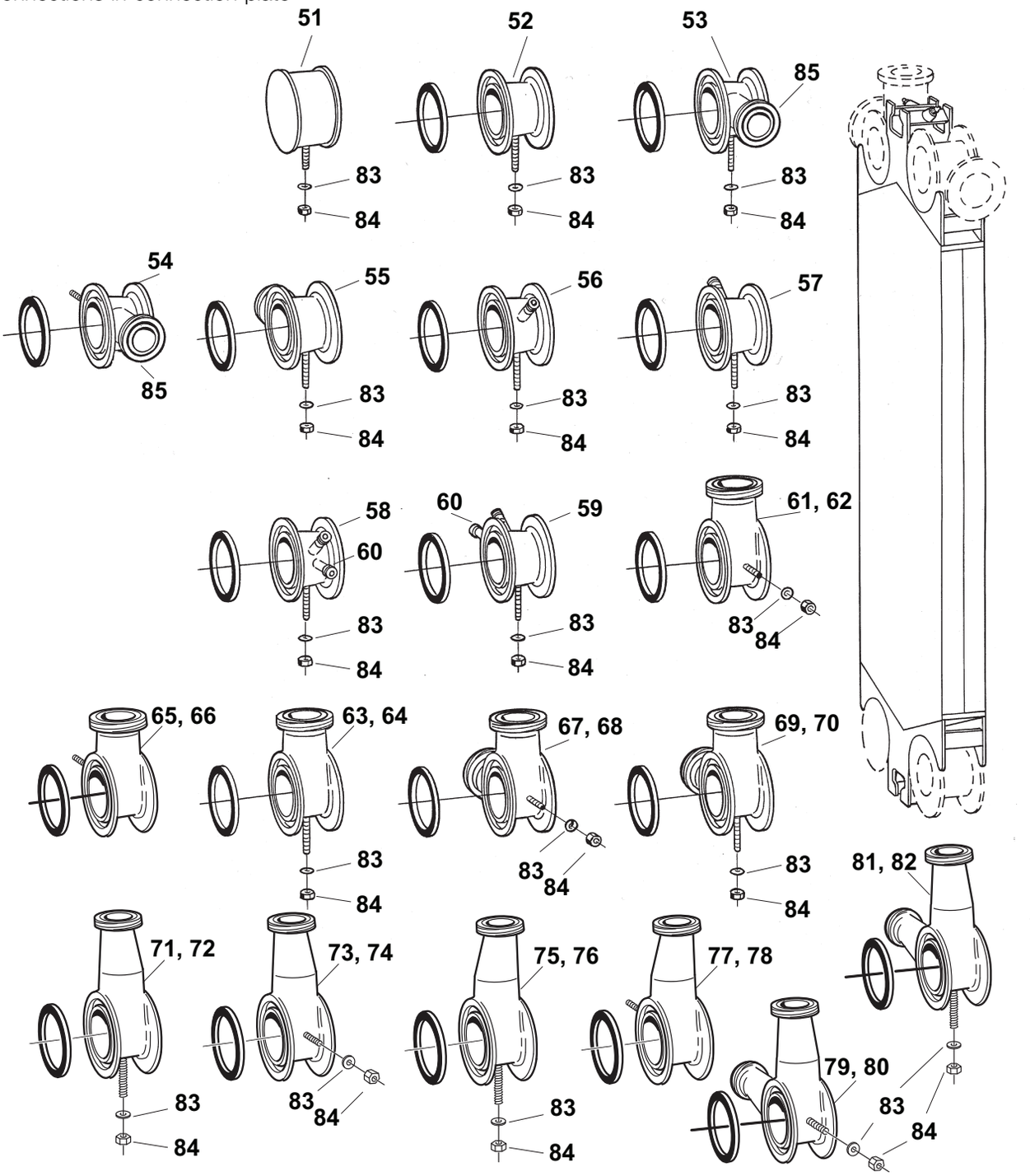

Drawing of connection plate corners.

Pos	Denomination	AlfaLaval Part No	Specification	Comments
51	Blind corner	1625368-01		CE, ALS
52	Through passage	1625378-01		CE, ALS
		1625378-02		CE, ALS 3-A sanitary std
		3350026402	Alloy 254	CE, ALS
		3350026403	Alloy 254	CE, ALS 3-A sanitary std
53	Through passage with 2" connection	1641863-01	Vertical position A-1 and A-3	CE, ALS
		1641863-03	Vertical position A-1 and A-3	CE, ALS 3-A sanitary std
54	Through passage with 2" connection	3350019900	Horizontal position	CE, ALS
		3350019901	Horizontal position	CE, ALS 3-A sanitary std
55	Through passage with 2" connection	1641863-02	Vertical position A-2 and A-4	CE, ALS
		1641863-04	Vertical position A-2 and A-4	CE, ALS 3-A sanitary std
56	Through passage with dive tube	1641864-01	Position A-1 and A-3	CE, ALS
57	Through passage with dive tube	1641864-02	Position A-2 and A-4	CE, ALS
58	Through passage with dive tube and ventilating valve	1641865-01	Position A-1	CE, ALS
59	Through passage with dive tube and ventilating valve	1641865-02	Position A-4	CE, ALS
60	Valve	31350-0020-1	R 3/4"	CE, ALS
61	Single corner, Ø101	1641861-01	Vertical position A-1,A-3 if bottom towards frame plate, otherwise A-2,A-4	CE, ALS
		1641861-07	Vertical position A-1,A-3 if bottom towards frame plate, otherwise A-2,A-4	CE, ALS 3-A sanitary std
		3350026412	Alloy 254, Vertical position A-1,A-3 if bottom towards frame plate, otherwise A-2,A-4	CE, ALS
		3350026415	Alloy 254, Vertical position A-1,A-3 if bottom towards frame plate, otherwise A-2,A-4	CE, ALS 3-A sanitary std
62	Single corner, DN100	34504421-01	Vertical position A-1,A-3 if bottom towards frame plate, otherwise A-2,A-4	CE, ALS
		34504421-07	Vertical position A-1,A-3 if bottom towards frame plate, otherwise A-2,A-4	CE, ALS 3-A sanitary std
		3350026431	Alloy 254, Vertical position A-1,A-3 if bottom towards frame plate, otherwise A-2,A-4	CE, ALS
		3350026434	Alloy 254, Vertical position A-1,A-3 if bottom towards frame plate, otherwise A-2,A-4	CE, ALS 3-A sanitary std
63	Single corner, Ø101	1641861-02	Horizontal all positions	CE, ALS
		1641861-08	Horizontal all positions	CE, ALS 3-A sanitary std
		3350026413	Alloy 254, Horizontal all positions	CE, ALS
		3350026416	Alloy 254, Horizontal all positions	CE, ALS 3-A sanitary std
64	Single corner, DN100	34504421-02	Horizontal all positions	CE, ALS
		34504421-08	Horizontal all positions	CE, ALS 3-A sanitary std
		3350026432	Alloy 254, Horizontal all positions	CE, ALS
		3350026435	Alloy 254, Horizontal all positions	CE, ALS 3-A sanitary std
65	Single corner, Ø101	1641861-03	Vertical position A-2,A-4 if bottom towards frame plate, otherwise A-1,A-3	CE, ALS
		1641861-09	Vertical position A-2,A-4 if bottom towards frame plate, otherwise A-1,A-3	CE, ALS 3-A sanitary std
		3350026414	Alloy 254, Vertical position A-2,A-4 if bottom towards frame plate, otherwise A-1,A-3	CE, ALS
		3350026417	Alloy 254, Vertical position A-2,A-4 if bottom towards frame plate, otherwise A-1,A-3	CE, ALS 3-A sanitary std
66	Single corner, DN100	34504421-03	Vertical position A-2,A-4 if bottom towards frame plate, otherwise A-1,A-3	CE, ALS
		34504421-09	Vertical position A-2,A-4 if bottom towards frame plate, otherwise A-1,A-3	CE, ALS 3-A sanitary std
		3350026433	Alloy 254, Vertical position A-2,A-4 if bottom towards frame plate, otherwise A-1,A-3	CE, ALS
		3350026436	Alloy 254, Vertical position A-2,A-4 if bottom towards frame plate, otherwise A-1,A-3	CE, ALS 3-A sanitary std
67	Double corner, Ø101	1641862-01	Position A-1 and A-3	CE, ALS
		1641862-05	Position A-1 and A-3	CE, ALS 3-A sanitary std
		3350026420	Alloy 254, Position A-1 and A-3	CE, ALS
		3350026422	Alloy 254, Position A-1 and A-3	CE, ALS 3-A sanitary std
68	Double corner, DN100	34504422-01	Position A-1 and A-3	CE, ALS
		34504422-05	Position A-1 and A-3	CE, ALS 3-A sanitary std
		3350026437	Alloy 254, Position A-1 and A-3	CE, ALS
		3350026439	Alloy 254, Position A-1 and A-3	CE, ALS 3-A sanitary std
69	Double corner, Ø101	1641862-02	Position A-2 and A-4	CE, ALS
		1641862-06	Position A-2 and A-4	CE, ALS 3-A sanitary std
		3350026421	Alloy 254, Position A-2 and A-4	CE, ALS
		3350026423	Alloy 254, Position A-2 and A-4	CE, ALS 3-A sanitary std
70	Double corner, DN100	34504422-02	Position A-2 and A-4	CE, ALS
		34504422-06	Position A-2 and A-4	CE, ALS 3-A sanitary std
		3350026438	Alloy 254, Position A-2 and A-4	CE, ALS
		3350026440	Alloy 254, Position A-2 and A-4	CE, ALS 3-A sanitary std

71	Single corner, Ø76	3350006295	Horizontal position A-2,A-4 if bottom towards frame plate, otherwise A-1,A-3	CE, ALS
		3350006299	Horizontal position A-2,A-4 if bottom towards frame plate, otherwise A-1,A-3	CE, ALS 3-A sanitary std
72	Single corner, DN80	3350006330	Horizontal position A-2,A-4 if bottom towards frame plate, otherwise A-1,A-3	CE, ALS
		3350006334	Horizontal position A-2,A-4 if bottom towards frame plate, otherwise A-1,A-3	CE, ALS 3-A sanitary std
73	Single corner, Ø76	3350006296	Vertical position A-1,A-3 if bottom towards frame plate, otherwise A-2,A-4	CE, ALS
		3350006300	Vertical position A-1,A-3 if bottom towards frame plate, otherwise A-2,A-4	CE, ALS 3-A sanitary std
74	Single corner, DN80	3350006331	Vertical position A-1,A-3 if bottom towards frame plate, otherwise A-2,A-4	CE, ALS
		3350006335	Vertical position A-1,A-3 if bottom towards frame plate, otherwise A-2,A-4	CE, ALS 3-A sanitary std
75	Single corner, Ø76	3350006297	Horizontal position A-1,A-3 if bottom towards frame plate, otherwise A-2,A-4	CE, ALS
		3350006301	Horizontal position A-1,A-3 if bottom towards frame plate, otherwise A-2,A-4	CE, ALS 3-A sanitary std
76	Single corner, DN80	3350006332	Horizontal position A-1,A-3 if bottom towards frame plate, otherwise A-2,A-4	CE, ALS
		3350006336	Horizontal position A-1,A-3 if bottom towards frame plate, otherwise A-2,A-4	CE, ALS 3-A sanitary std
77	Single corner, Ø76	3350006298	Vertical position A-2,A-4 if bottom towards frame plate, otherwise A-1,A-3	CE, ALS
		3350006302	Vertical position A-2,A-4 if bottom towards frame plate, otherwise A-1,A-3	CE, ALS 3-A sanitary std
78	Single corner, DN80	3350006333	Vertical position A-2,A-4 if bottom towards frame plate, otherwise A-1,A-3	CE, ALS
		3350006337	Vertical position A-2,A-4 if bottom towards frame plate, otherwise A-1,A-3	CE, ALS 3-A sanitary std
79	Double corner, Ø76	3350006360	Position A-1 and A-3	CE, ALS
		3350006362	Position A-1 and A-3	CE, ALS 3-A sanitary std
80	Double corner, DN80	3350006364	Position A-1 and A-3	CE, ALS
		3350006366	Position A-1 and A-3	CE, ALS 3-A sanitary std
81	Double corner, Ø76	3350006361	Position A-2 and A-4	CE, ALS
		3350006363	Position A-2 and A-4	CE, ALS 3-A sanitary std
82	Double corner, DN80	3350006365	Position A-2 and A-4	CE, ALS
		3350006367	Position A-2 and A-4	CE, ALS 3-A sanitary std
83	Washer	223101-61	BRB 10.5 x 22 - 2343	
84	Nut	221803-29	ISO 4032 - M10 - A4-70	
85	Fitting, Ø51	1644793-03	SMS 51 MALE PART	CE, ALS For through passage with 2" connection
		1644796-03	DIN 51 MALE PART	CE, ALS For through passage with 2" connection
		1644799-03	IDF 51 MALE PART	CE, ALS For through passage with 2" connection
		1644802-03	RJT 51 MALE PART	CE, ALS For through passage with 2" connection
		1644805-03	CLAMP 51 NIPPLE	CE, ALS For through passage with 2" connection
	Gasket ring		Same as for FP and PP, see above.	
	Fitting		Same as for FP and PP, see above.	
	Flange		Same as for FP and PP, see above.	

Blind connection

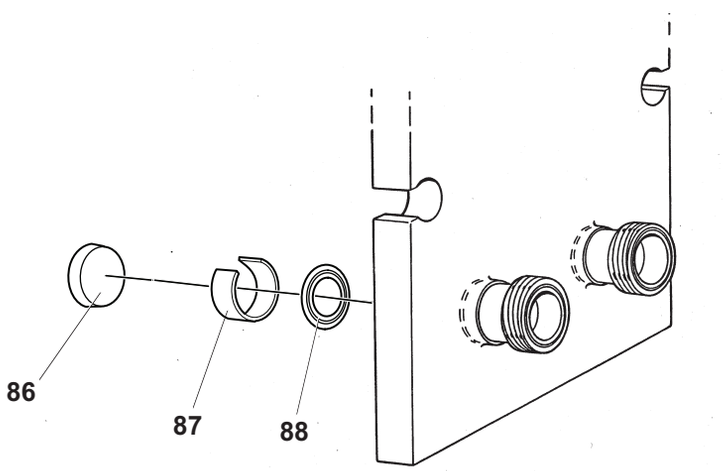

Drawing of blind connection.

Pos	Denomination	AlfaLaval Part No	Specification	Comments
86	Blind cover	3350019754		CE For connection without connection pipe (FP side)
		1625345-01		CE For connection with connection pipe
		3350002333		ALS For connection without connection pipe
		3350002334		ALS For connection with connection pipe
		3350041066		CE For connection withou connection pipe (PP side)
87	Spring	32324-7909-1		CE For connection with connection pipe
88	Gasket ring	3350003902	EPDMFF	For frame plate

Spare Parts Lists Front 10 -RD

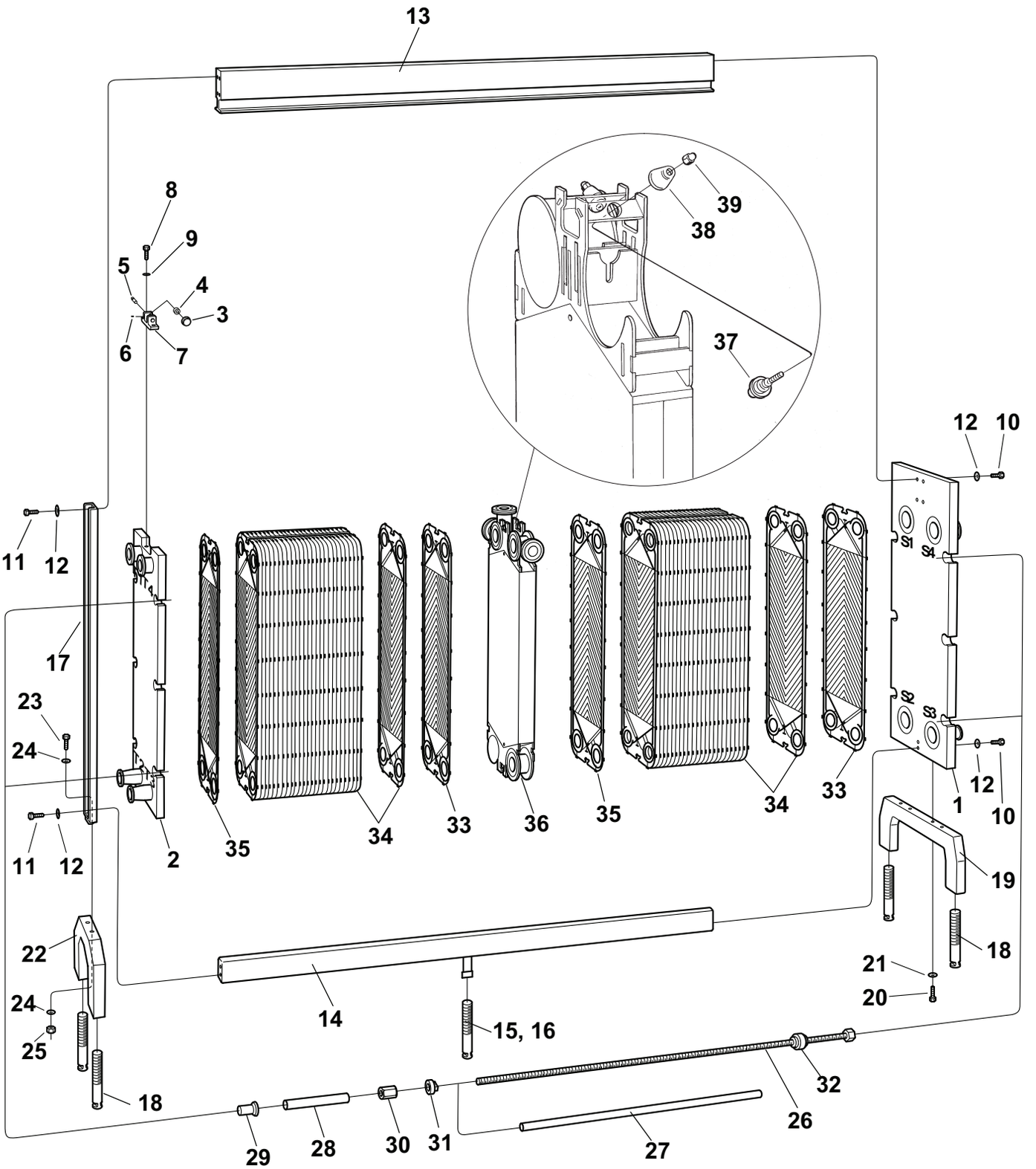

Exploded view of Front10-RD.

8

Frame components

Pos	Denomination	AlfaLaval Part No	Specification	Comments
1	Frame plate	3350011455	4-holed	CE
		3350011456	2-holed S1 S4	CE
		3350011457	2-holed S2 S3	CE
2	Pressure Plate	3350011461	Unholed	CE
		3350011458	4-holed	CE
		3350011459	2-holed T1 T4	CE
		3350011460	2-holed T2 T3	CE
3	Wheel	82300049-01		
4	Needle bearing	528402-03	NKI 20/16 INA	
5	Shaft	1620780-01		
6	Stop screw	260080-04	SK6SS 6x8-A4	
7	Bracket	3350001678		
8	Screw	260192-06	ISO 4017 - M20 x 45 - A4-70	
9	Washer	223101-39	BRB 21 x 37 - 2343	
10	Screw	221046-05	ISO 4014 - M12 x 100 - A4-70	
11	Screw	221046-30	ISO 4017 - M12 x 40 - A4-70	
12	Washer	223101-35	BRB 13 x 24 - 2343	
13	Carrying bar	1623169-01	L=1200	
		1623169-02	L=1800	
		1623169-03	L=2400	
		1623169-04	L=3000	
		1623169-05	L=3600	
		1623169-06	L=4200	
		1623169-07	L=SPEC, max. 4200	
		1623203-01	L=4800	
		1623203-02	L=5400	
14	Guiding bar	32323-4001-2	L=1200	
		32323-4001-4	L=1800	
		32323-4001-6	L=2400	
		32323-4001-8	L=3000	
		32323-4002-1	L=3600	
		32323-4002-3	L=4200	
		32323-4002-2	L=SPEC, max. 4200	
		32323-4017-3	L=4800, incl. foot	
		32323-4017-4	L=5400, incl. foot	
15	Screw	1640885-01	M39, L=280	For guiding bar with foot. Valid for low foot.
		1640885-03	M39, L=565	For guiding bar with foot. Valid for high foot.
16	Protecting tube	32326-1231-1		For guiding bar with foot
		32323-4128-1		For guiding bar with foot. Valid for 3-A sanitary std.
17	Supporting column	1640448-02		
18	Levelling screw	1640885-02	L=230, M39	For low foot
		1640885-01	L=280, M39	For high foot
19	Foot	1640539-01	Low	
		1640884-01	High	
		3350029733	Low	3-A sanitary std
		3350029723	High	3-A sanitary std
20	Screw	260192-06	ISO 4017 - M20 x 45 - A4-70	
		260192-41	ISO 4017 - M20 x 120 - A4-70	Valid for 3-A sanitary std
21	Washer	223101-39	BRB 21 x 37 - 2343	
22	Foot	1640445-01	Low	
		1640551-01	High	
		3350029738	Low	3-A sanitary std
		3350029728	High	3-A sanitary std
23	Screw	2210463-03	ISO 4017 - M16 x 40 - A4-70	
		2210463-15	ISO 4014 - M16 x 120 - A4-70	Valid for 3-A sanitary std
24	Washer	223101-37	BRB 17 x 30 - 2343	
25	Nut	221803-40	ISO 4032 - M16 - A4-70	
26	Tightening bolt	1624462-01	M39, L=1160	CE
		1624462-02	M39, L=1460	CE
		1624462-03	M39, L=1760	CE
		1624462-04	M39, L=2060	CE
		1624462-05	M39, L=2360	CE
		1624462-06	M39, L=2960	CE
		1624462-07	M39, L=3560	CE
		1624462-08	M39, L=4160	CE
		1624462-09	M39, L=4760	CE
		1624462-11	M39, L=5360	CE
		1624462-10	M39, L=SPEC.	CE
27	Protecting tube	1641359-01	L=915	For bolts with 105 mm nut
		1641359-02	L=1215	For bolts with 105 mm nut
		1641359-03	L=1515	For bolts with 105 mm nut
		1641359-04	L=1815	For bolts with 105 mm nut
		1641359-05	L=2115	For bolts with 105 mm nut
		1641359-06	L=2715	For bolts with 105 mm nut

		1641359-07	L=3315	For bolts with 105 mm nut
		1641359-08	L=3915	For bolts with 105 mm nut
		1641359-09	L=4515	For bolts with 105 mm nut
		1641359-11	L=5115	For bolts with 105 mm nut
		1641359-10	L=SPEC.	For bolts with 105 mm nut
		1641359-13	L=890	For bolts with 130 mm nut
		1641359-14	L=1190	For bolts with 130 mm nut
		1641359-15	L=1490	For bolts with 130 mm nut
		1641359-16	L=1790	For bolts with 130 mm nut
		1641359-17	L=2090	For bolts with 130 mm nut
		1641359-18	L=2690	For bolts with 130 mm nut
		1641359-19	L=3290	For bolts with 130 mm nut
		1641359-20	L=3890	For bolts with 130 mm nut
		1641359-21	L=4490	For bolts with 130 mm nut
		1641359-21	L=4490	For bolts with 130 mm nut
		1641359-23	L=5090	For bolts with 130 mm nut
		1641359-22	L=SPEC.	For bolts with 130 mm nut
28	Plastic tube	1995-101-079	ID=41	For M39 bolt
29	Cap	1641360-05	M39	
30	Nut	1641669-01	M39, L=105 mm	CE
		1641669-02	M39, L=130 mm	CE
31	Lock washer	32324-2915-1	M39	
32	Bearing box	1624161-01	M39	
33	End plate I			
34	Channel plates			
35	End plate II			
36	Connection plate	3350001099		CE
37	Bolt	1640386-02	Roller screw	
38	Dished washer	1641849-01		
39	Acron nut	1640387-01		
	Ratchet spanner	32220-3101-7	M39, NV60	Assembling tool
	Protection sheet		Available for the Plate Heat Exchanger, contact your local Alfa Laval Representative for more information on how to order.	
		3350000635	Sign	For protection sheet.

Connections

Connections in frame plate and pressure plate

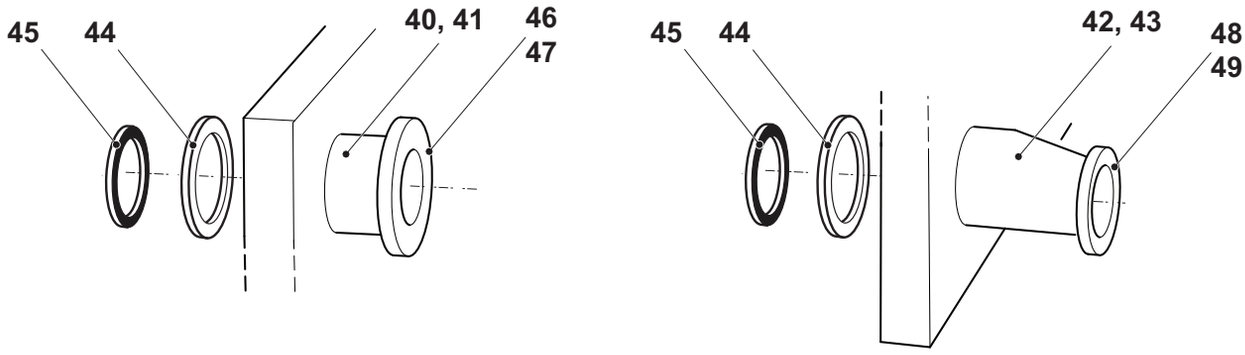

Drawing of connections in frame plate and pressure plate.

Pos	Denomination	AlfaLaval Part No	Specification	Comments
40	Pipe, Ø101	1625369-01		CE
		1625369-02		CE 3-A sanitary std
41	Pipe, DN100	34504420-01		CE
		34504420-02		CE 3-A sanitary std
42	Pipe, Ø76	3350006408	Eccentric reduction Ø101.6 • Ø76.1	CE
		3350006410	Eccentric reduction Ø101.6 • Ø76.1	CE 3-A sanitary std
43	Pipe, DN80	3350006409	Eccentric reduction Ø101.6 • DN80	CE
		3350006411	Eccentric reduction Ø101.6 • DN80	CE 3-A sanitary std
44	Welding ring	3350010972		CE For frame plate
		3350010973		CE For pressure plate
45	Gasket ring	3350003902	EPDMFF	For frame plate
		3350003901	NBRFF	For frame plate
46	Fitting, Ø101	1644793-06	SMS 101 MALE PART	CE
		1644796-06	DIN 101 NW100 MALE PART	CE
		1644799-06	IDF 101 MALE PART	CE
		1644802-06	RJT 101 MALE PART	CE
		1644805-06	CLAMP 101 NIPPLE	CE
47	Fitting, DN100	34503623-01	DIN 11864-1 DN100	CE
48	Fitting, Ø76	1644793-05	SMS 76 MALE PART	CE
		34503161-01	DIN 76 NW80 MALE PART, Inside tappered	CE
		1644799-05	IDF 76 MALE PART	CE
		1644802-05	RJT 76 MALE PART	CE
		1644805-05	CLAMP 76 NIPPLE	CE
49	Fitting, DN80	34503624-01	DIN 11864-1 DN80	CE

Connections in connection plate

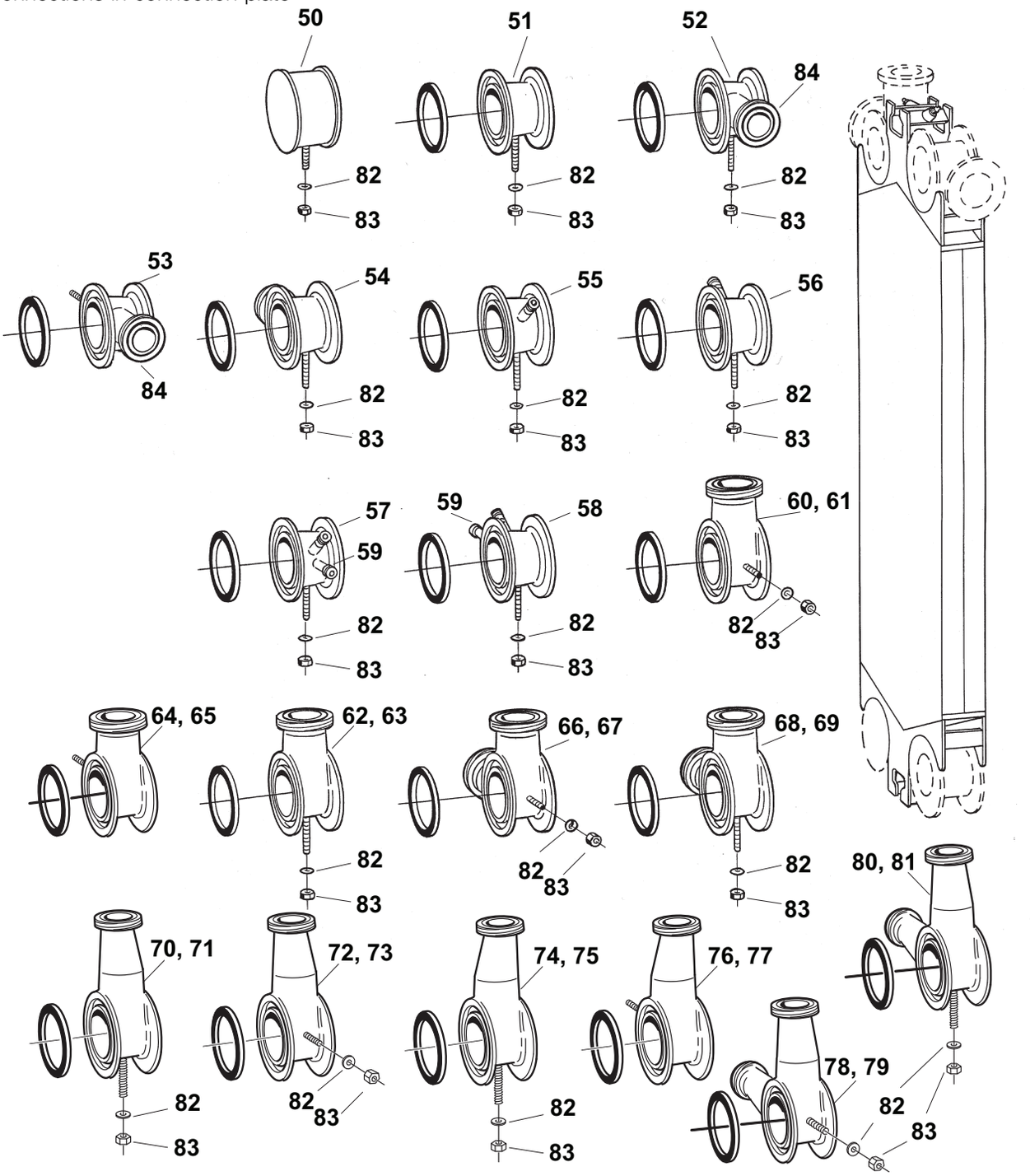

Drawing of connection plate corners.

Pos	Denomination	AlfaLaval Part No	Specification	Comments
50	Blind corner	1625368-01		CE
51	Through passage	1625378-01		CE
		1625378-02		CE 3-A sanitary std
52	Through passage with 2" connection	1641863-01	Vertical position A-1 and A-3	CE
		1641863-03	Vertical position A-1 and A-3	CE 3-A sanitary std
53	Through passage with 2" connection	3350019900	Horizontal position	CE
		3350019901	Horizontal position	CE 3-A sanitary std
54	Through passage with 2" connection	1641863-02	Vertical position A-2 and A-4	CE
		1641863-04	Vertical position A-2 and A-4	CE 3-A sanitary std
55	Through passage with dive tube	1641864-01	Position A-1 and A-3	CE
56	Through passage with dive tube	1641864-02	Position A-2 and A-4	CE
57	Through passage with dive tube and ventilating valve	1641865-01	Position A-1	CE
58	Through passage with dive tube and ventilating valve	1641865-02	Position A-4	CE
59	Valve	31350-0020-1	R 3/4"	CE
60	Single corner, Ø101	1641861-01	Vertical position A-1,A-3 if bottom towards frame plate, otherwise A-2,A-4	CE
		1641861-07	Vertical position A-1,A-3 if bottom towards frame plate, otherwise A-2,A-4	CE 3-A sanitary std
61	Single corner, DN100	34504421-01	Vertical position A-1,A-3 if bottom towards frame plate, otherwise A-2,A-4	CE
		34504421-07	Vertical position A-1,A-3 if bottom towards frame plate, otherwise A-2,A-4	CE 3-A sanitary std
62	Single corner, Ø101	1641861-02	Horizontal all positions	CE
		1641861-08	Horizontal all positions	CE 3-A sanitary std
63	Single corner, DN100	34504421-02	Horizontal all positions	CE
		34504421-08	Horizontal all positions	CE 3-A sanitary std
64	Single corner, Ø101	1641861-03	Vertical position A-2,A-4 if bottom towards frame plate, otherwise A-1,A-3	CE
		1641861-09	Vertical position A-2,A-4 if bottom towards frame plate, otherwise A-1,A-3	CE 3-A sanitary std
65	Single corner, DN100	34504421-03	Vertical position A-2,A-4 if bottom towards frame plate, otherwise A-1,A-3	CE
		34504421-09	Vertical position A-2,A-4 if bottom towards frame plate, otherwise A-1,A-3	CE 3-A sanitary std
66	Double corner, Ø101	1641862-01	Position A-1 and A-3	CE
		1641862-05	Position A-1 and A-3	CE 3-A sanitary std
67	Double corner, DN100	34504422-01	Position A-1 and A-3	CE
		34504422-05	Position A-1 and A-3	CE 3-A sanitary std
68	Double corner, Ø101	1641862-02	Position A-2 and A-4	CE
		1641862-06	Position A-2 and A-4	CE 3-A sanitary std
69	Double corner, DN100	34504422-02	Position A-2 and A-4	CE
		34504422-06	Position A-2 and A-4	CE 3-A sanitary std
70	Single corner, Ø76	3350006295	Horizontal position A-2,A-4 if bottom towards frame plate, otherwise A-1,A-3	CE
		3350006299	Horizontal position A-2,A-4 if bottom towards frame plate, otherwise A-1,A-3	CE 3-A sanitary std
71	Single corner, DN80	3350006330	Horizontal position A-2,A-4 if bottom towards frame plate, otherwise A-1,A-3	CE
		3350006334	Horizontal position A-2,A-4 if bottom towards frame plate, otherwise A-1,A-3	CE 3-A sanitary std
72	Single corner, Ø76	3350006296	Vertical position A-1,A-3 if bottom towards frame plate, otherwise A-2,A-4	CE
		3350006300	Vertical position A-1,A-3 if bottom towards frame plate, otherwise A-2,A-4	CE 3-A sanitary std
73	Single corner, DN80	3350006331	Vertical position A-1,A-3 if bottom towards frame plate, otherwise A-2,A-4	CE
		3350006335	Vertical position A-1,A-3 if bottom towards frame plate, otherwise A-2,A-4	CE 3-A sanitary std
74	Single corner, Ø76	3350006297	Horizontal position A-1,A-3 if bottom towards frame plate, otherwise A-2,A-4	CE
		3350006301	Horizontal position A-1,A-3 if bottom towards frame plate, otherwise A-2,A-4	CE 3-A sanitary std
75	Single corner, DN80	3350006332	Horizontal position A-1,A-3 if bottom towards frame plate, otherwise A-2,A-4	CE
		3350006336	Horizontal position A-1,A-3 if bottom towards frame plate, otherwise A-2,A-4	CE 3-A sanitary std
76	Single corner, Ø76	3350006298	Vertical position A-2,A-4 if bottom towards frame plate, otherwise A-1,A-3	CE
		3350006302	Vertical position A-2,A-4 if bottom towards frame plate, otherwise A-1,A-3	CE 3-A sanitary std

77	Single corner, DN80	3350006333	Vertical position A-2,A-4 if bottom towards frame plate, otherwise A-1,A-3	CE
		3350006337	Vertical position A-2,A-4 if bottom towards frame plate, otherwise A-1,A-3	CE 3-A sanitary std
78	Double corner, Ø76	3350006360	Position A-1 and A-3	CE
		3350006362	Position A-1 and A-3	CE 3-A sanitary std
79	Double corner, DN80	3350006364	Position A-1 and A-3	CE
		3350006366	Position A-1 and A-3	CE 3-A sanitary std
80	Double corner, Ø76	3350006361	Position A-2 and A-4	CE
		3350006363	Position A-2 and A-4	CE 3-A sanitary std
81	Double corner, DN80	3350006365	Position A-2 and A-4	CE
		3350006367	Position A-2 and A-4	CE 3-A sanitary std
82	Washer	223101-61	BRB 10.5 x 22 - 2343	
83	Nut	221803-29	ISO 4032 - M10 - A4-70	
84	Fitting, Ø51	1644793-03	SMS 51 MALE PART	CE For through passage with 2" connection
		1644796-03	DIN 51 MALE PART	CE For through passage with 2" connection
		1644799-03	IDF 51 MALE PART	CE For through passage with 2" connection
		1644802-03	RJT 51 MALE PART	CE For through passage with 2" connection
		1644805-03	CLAMP 51 NIPPLE	CE For through passage with 2" connection
	Gasket ring		Same as for FP and PP, see above.	
	Fitting		Same as for FP and PP, see above.	

Blind connection

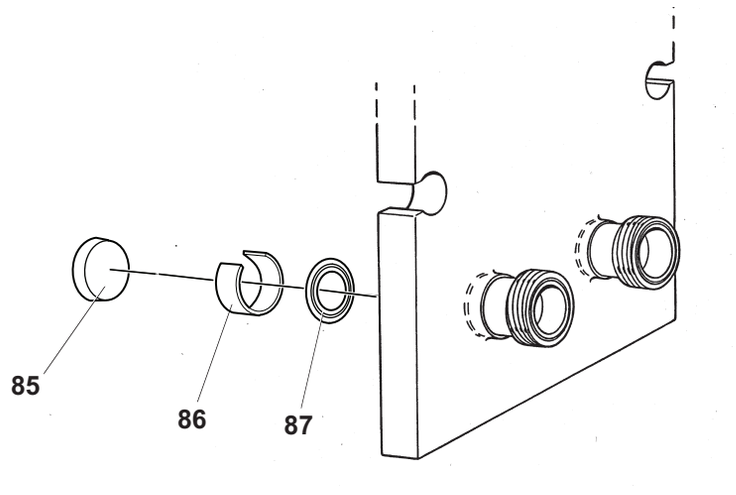

Drawing of blind connection.

Pos	*Denomination*	*AlfaLaval Part No*	*Specification*	*Comments*
85	Blind cover	3350019754 1625345-01 3350041066		CE For connection without connection pipe (FP side) CE For connection with connection pipe CE For connection without connection pipe (PP side)
86	Spring	32324-7909-1		CE For connection with connection pipe
87	Gasket ring	3350003902	EPDMFF	For frame plate

Spare Parts Lists Front 15 -FRH

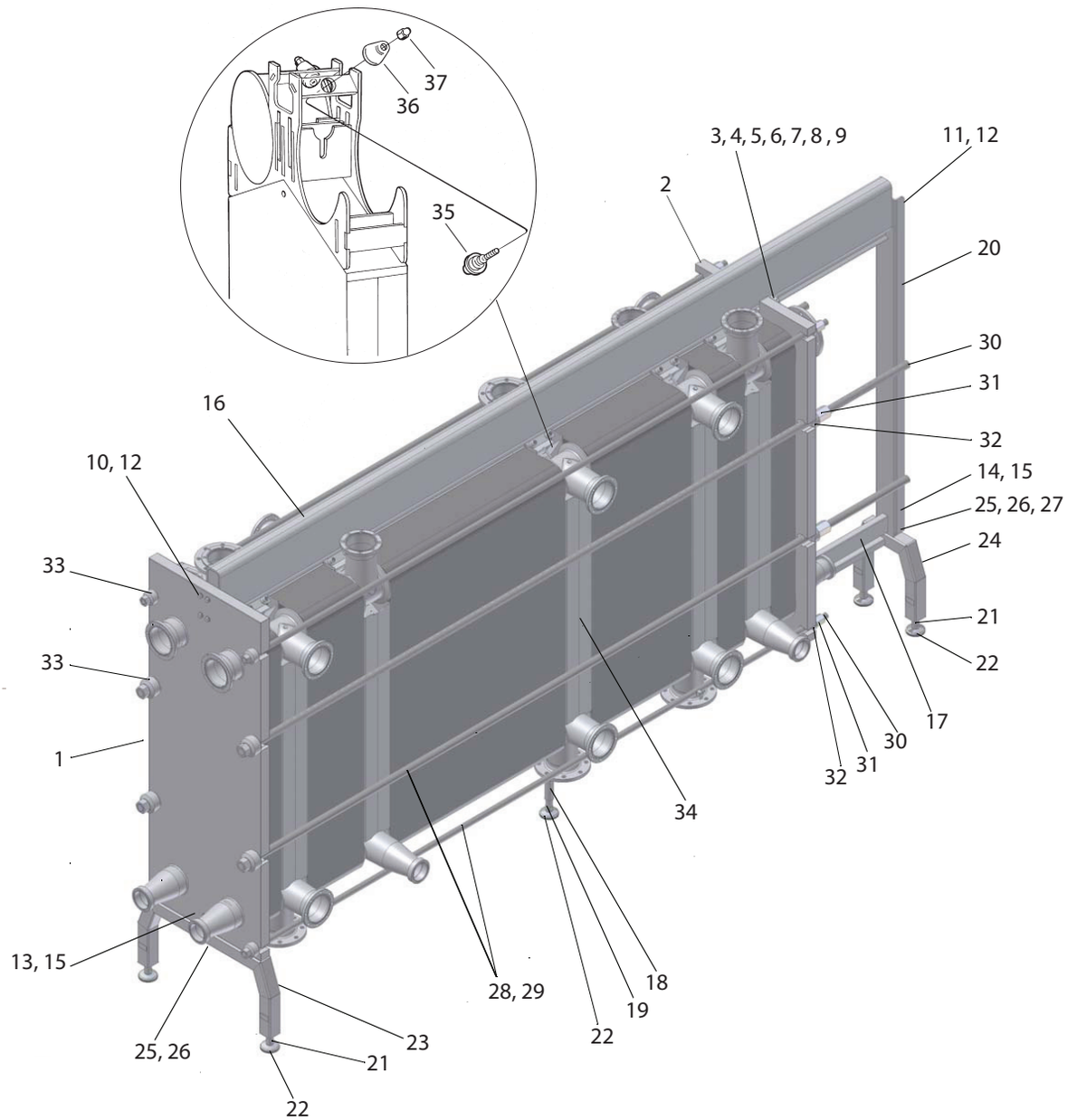

View from frame plate side of Front 15-RH.
14

Frame components

Pos	*Denomination*	*AlfaLaval Part No*	*Specification*	*Comments*
1	Frame plate	34509470-01	4-holed	CE
		34509471-01	3-holed, S1 S2 S3	CE
		34509472-01	3-holed, S1 S2 S4	CE
		34509473-01	3-holed, S1 S3 S4	CE
		34509474-01	3-holed, S2 S3 S4	CE
		34509475-01	2-holed, S1 S2	CE
		34509476-01	2-holed, S1 S3	CE
		34509477-01	2-holed, S1 S4	CE
		34509478-01	2-holed, S2 S3	CE
		34509479-01	2-holed, S2 S4	CE
		34509480-01	2-holed, S3 S4	CE
		34509481-01	1-holed, S1	CE
		34509482-01	1-holed, S2	CE
		34509483-01	1-holed, S3	CE
		34509517-01	1-holed, S4	CE
		34505925-01	Unholed	CE
2	Pressure plate	34504944-01	4-holed	CE
		34505093-01	3-holed, T1 T2 T3	CE
		34505094-01	3-holed, T1 T2 T4	CE
		34505095-01	3-holed, T1 T3 T4	CE
		34505096-01	3-holed, T2 T3 T4	CE
		34505097-01	2-holed, T1 T2	CE
		34505098-01	2-holed, T1 T3	CE
		34505099-01	2-holed, T1 T4	CE
		34505100-01	2-holed, T2 T3	CE
		34505101-01	2-holed, T2 T4	CE
		34505102-01	2-holed, T3 T4	CE
		34505926-01	1-holed, T1	CE
		34505927-01	1-holed, T2	CE
		34505928-01	1-holed, T3	CE
		34505929-01	1-holed, T4	CE
		34505930-01	Unholed	CE
3	Wheel	1620781-01		
4	Needle bearing	528402-03	NKI 20/16 INA	
5	Shaft	1620780-01		
6	Stop screw	260080-04	SK6SS 6x8-A4	
7	Roller holder	34505990-01		
8	Screw	260192-31	ISO 4017 - M20 x 60 - A4-70	
9	Washer	223101-39	BRB 21 x 37 - 2343	
10	Screw	2210463-13	ISO 4014 - M16 x 100 - A4-70	
11	Screw	2210463-03	ISO 4017 - M16 x 40 - A4-70	
12	Washer	223101-37	BRB 17 x 30 - 2343	
13	Screw	221046-13	ISO 4014 - M12 x 90 - A4-70	
14	Screw	221046-22	ISO 4017 - M12 x 35 - A4-70	
15	Washer	223101-35	BRB 13 x 24 - 2343	
16	Carrying bar	34505066-01	L=1200	
		34505067-01	L=1800	
		34505068-01	L=2400	
		34505069-01	L=3000	
		34505070-01	L=3600	
		34505071-01	L=4200	
		34505117-01	L=4800	
		34505118-01	L=5400	
		34505119-01	L=6000	
17	Guiding bar	3350003541	L=1200	
		3350003542	L=1800	
		3350003543	L=2400	
		3350003544	L=3000	
		3350003545	L=3600	
		3350003546	L=4200, incl. foot	
		3350003547	L=4800, incl. foot	
		3350003548	L=5400, incl. foot	
		3350003549	L=6000, incl. foot	
18	Tube	32323-4128-1		For guiding bar with foot.
19	Levelling screw	34505470-01	M39, L=460	For guiding bar with foot. Valid for low foot.
		34505470-02	M39, L=980	For guiding bar with foot. Valid for high foot.
20	Support column	34504913-01		
21	Levelling screw	34504906-01	L=250, M39	
22	Foot plate	34504994-01		
23	Foot	34504911-01	Low	
		34505462-01	High	
		3350029818	Low	3-A sanitary std
		3350029808	High	3-A sanitary std
24	Foot	34504993-01	Low	
		34505468-01	High	
		3350029813	Low	3-A sanitary std
		3350029803	High	3-A sanitary std

25	Screw	260192-07	ISO 4017 - M20 x 50 - A4-70	
		260192-42	ISO 4017 - M20 x 130 - A4-70	Valid for 3-A sanitary std
26	Washer	223101-39	BRB 21 x 37 - 2343	
27	Nut	221803-23	ISO 4032 - M20 - A4-70	
28	Tightening bolt	1624462-01	M39, L=1160	CE
		1624462-03	M39, L=1760	CE
		1624462-05	M39, L=2360	CE
		1624462-06	M39, L=2960	CE
		1624462-07	M39, L=3560	CE
		1624462-08	M39, L=4160	CE
		1624462-09	M39, L=4760	CE
		1624462-11	M39, L=5360	CE
		1624462-12	M39, L=5960	CE
		1624463-03	M30, L=1160	CE
		1624463-05	M30, L=1760	CE
		1624463-07	M30, L=2360	CE
		1624463-08	M30, L=2960	CE
		1624463-09	M30, L=3560	CE
		1624463-11	M30, L=4160	CE
		1624463-12	M30, L=4760	CE
29	Protecting tube	1641359-01	L=915	For M39 bolt
		1641359-03	L=1515	For M39 bolt
		1641359-05	L=2115	For M39 bolt
		1641359-06	L=2715	For M39 bolt
		1641359-07	L=3315	For M39 bolt
		1641359-08	L=3915	For M39 bolt
		1641359-09	L=4515	For M39 bolt
		1641359-11	L=5115	For M39 bolt
		1641359-12	L=5715	For M39 bolt
		1641358-03	L=964	For M30 bolt
		1641358-05	L=1564	For M30 bolt
		1641358-07	L=2164	For M30 bolt
		1641358-08	L=2764	For M30 bolt
		1641358-09	L=3364	For M30 bolt
		1641358-11	L=3964	For M30 bolt
		1641358-12	L=4564	For M30 bolt
30	Cap	1641360-05	M39	
		1641360-04	M30	
31	Nut	1641669-01	M39, L=105 mm	CE
		1641668-02	M30, L=80 mm	CE
32	Lock washer	32324-2915-1	M39	
		32234-4897-1	M30	
33	Bearing box	1624161-01	M39	
		1624157-01	M30	
34	Connection plate	34509525-01		CE
35	Bolt	1640386-02	Roller screw	
36	Dished washer	1641849-01		
37	Acron nut	1640387-01		
	Ratchet spanner	32220-3101-7	M39, NV60	Assembling tool
		32220-3101-5	M30, NV46	Assembling tool
	Protection sheet		Available for the Plate Heat Exchanger, contact your local Alfa Laval Representative for more information on how to order.	
		3350000659	Sign	For protection sheet

Connections

Connections in frame plate and pressure plate

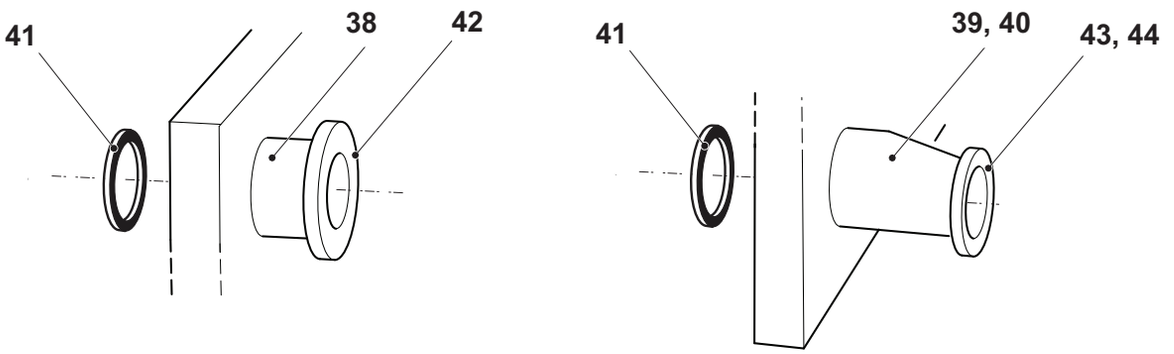

Drawing of connections in frame plate and pressure plate.

Pos	*Denomination*	*AlfaLaval Part No*	*Specification*	*Comments*
38	Pipe, DN150	34506143-01		CE
		34506144-01		CE 3-A sanitary std
39	Pipe, Ø101	3350005564	Eccentric reduction DN150 • Ø101	CE

		3350005565	Eccentric reduction DN150 • Ø101	CE 3-A sanitary std
40	Pipe, DN100	3350005566	Eccentric reduction DN150 • DN100	CE
		3350005567	Eccentric reduction DN150 • DN100	CE 3-A sanitary std
41	Gasket ring	3350002702	EPDMFF	For frame plate
		3350002703	NBRFF	For frame plate
42	Flange, DN150	34505063-01	EN 1092-1	CE
		34505061-01	DIN 11864-2 (Form A)	CE
		3350018012	FG1 PN10	CE Max. 10 bar
		3350018008	FN1 PN10	CE Max. 10 bar
43	Fitting, Ø101	1644793-06	SMS 101 MALE PART	CE
		1644796-06	DIN 101 NW100 MALE PART	CE
		1644799-06	IDF 101 MALE PART	CE
		1644802-06	RJT 101 MALE PART	CE
		1644805-06	CLAMP 101 NIPPLE	CE
44	Fitting, DN100	34503623-01	DIN 11864-1	CE

Connections in connection plate

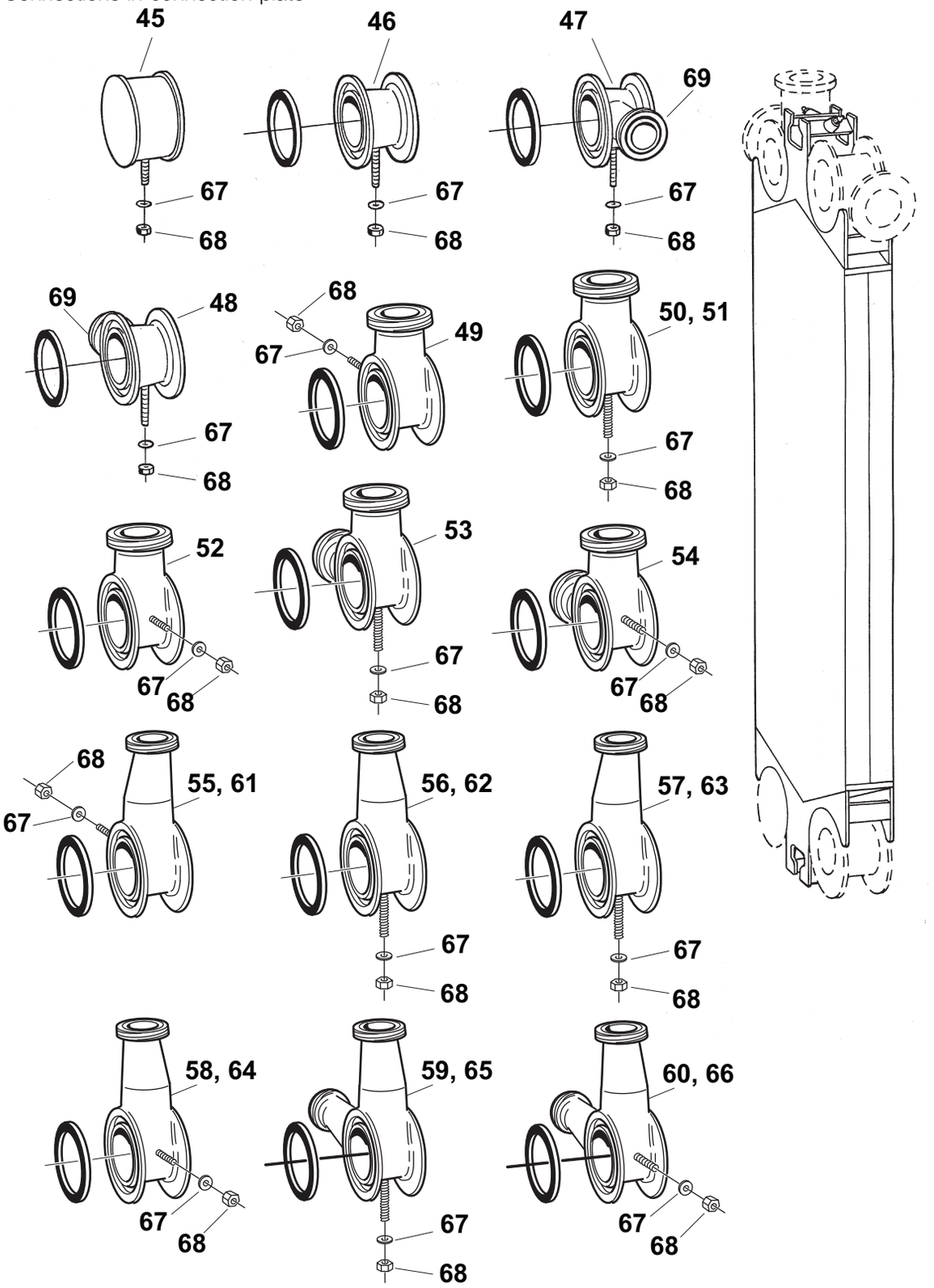

Drawing of connection plate corners.

Pos	Denomination	AlfaLaval Part No	Specification	Comments
45	Blind corner	34505879-01		CE
46	Through passage	34509400-01		CE
		34509399-01		CE 3-A sanitary std
47	Through passage with 2" connection	34509427-01	Position A-1,A-3	CE
		34509431-01	Position A-1,A-3	CE 3-A sanitary std
48	Through passage with 2" connection	34509429-01	Position A-2,A-4	CE
		34509432-01	Position A-2,A-4	CE 3-A sanitary std
49	Single corner, DN150	34509402-01	Vertical position A-2,A-4 if bottom towards frame plate, otherwise A-1,A-3	CE
		34509407-01	Vertical position A-2,A-4 if bottom towards frame plate, otherwise A-1,A-3	CE 3-A sanitary std
50	Single corner, DN150	34509404-01	Horizontal position A-2,A-4 if bottom towards frame plate, otherwise A-1,A-3	CE
		34509408-01	Horizontal position A-2,A-4 if bottom towards frame plate, otherwise A-1,A-3	CE 3-A sanitary std
51	Single corner, DN150	34509405-01	Horizontal position A-1,A-3 if bottom towards frame plate, otherwise A-2,A-4	CE
		34509409-01	Horizontal position A-1,A-3 if bottom towards frame plate, otherwise A-2,A-4	CE 3-A sanitary std
52	Single corner, DN150	34509406-01	Vertical position A-1,A-3 if bottom towards frame plate, otherwise A-2,A-4	CE
		34509410-01	Vertical position A-1,A-3 if bottom towards frame plate, otherwise A-2,A-4	CE 3-A sanitary std
53	Double corner, DN150	34509434-01	Position A-2,A-4	CE
		34509436-01	Position A-2,A-4	CE 3-A sanitary std
54	Double corner, DN150	34509435-01	Position A-1,A-3	CE
		34509437-01	Position A-1,A-3	CE 3-A sanitary std
55	Single corner, Ø101	3350004676	Vertical position A-2,A-4 if bottom towards frame plate, otherwise A-1,A-3	CE
		3350004734	Vertical position A-2,A-4 if bottom towards frame plate, otherwise A-1,A-3	CE 3-A sanitary std
56	Single corner, Ø101	3350004674	Horizontal position A-2,A-4 if bottom towards frame plate, otherwise A-1,A-3	CE
		3350004732	Horizontal position A-2,A-4 if bottom towards frame plate, otherwise A-1,A-3	CE 3-A sanitary std
57	Single corner, Ø101	3350004677	Horizontal position A-1,A-3 if bottom towards frame plate, otherwise A-2,A-4	CE
		3350004735	Horizontal position A-1,A-3 if bottom towards frame plate, otherwise A-2,A-4	CE 3-A sanitary std
58	Single corner, Ø101	3350004675	Vertical position A-1,A-3 if bottom towards frame plate, otherwise A-2,A-4	CE
		3350004733	Vertical position A-1,A-3 if bottom towards frame plate, otherwise A-2,A-4	CE 3-A sanitary std
59	Double corner, Ø101	3350005269	Position A-2,A-4	CE
		3350005271	Position A-2,A-4	CE 3-A sanitary std
60	Double corner, Ø101	3350005268	Position A-1,A-3	CE
		3350005270	Position A-1,A-3	CE 3-A sanitary std
61	Single corner, DN100	3350005275	Vertical position A-2,A-4 if bottom towards frame plate, otherwise A-1,A-3	CE
		3350005279	Vertical position A-2,A-4 if bottom towards frame plate, otherwise A-1,A-3	CE 3-A sanitary std
62	Single corner, DN100	3350005273	Horizontal position A-2,A-4 if bottom towards frame plate, otherwise A-1,A-3	CE
		3350005277	Horizontal position A-2,A-4 if bottom towards frame plate, otherwise A-1,A-3	CE 3-A sanitary std
63	Single corner, DN100	3350005276	Horizontal position A-1,A-3 if bottom towards frame plate, otherwise A-2,A-4	CE
		3350005280	Horizontal position A-1,A-3 if bottom towards frame plate, otherwise A-2,A-4	CE 3-A sanitary std
64	Single corner, DN100	3350005274	Vertical position A-1,A-3 if bottom towards frame plate, otherwise A-2,A-4	CE
		3350005278	Vertical position A-1,A-3 if bottom towards frame plate, otherwise A-2,A-4	CE 3-A sanitary std
65	Double corner, DN100	3350004641	Position A-2,A-4	CE
		3350004741	Position A-2,A-4	CE 3-A sanitary std
66	Double corner, DN100	3350004633	Position A-1,A-3	CE
		3350004740	Position A-1,A-3	CE 3-A sanitary std
67	Washer	223101-35	BRB 13 x 24 - 2343	
68	Nut	221803-22	ISO 4032 - M12 - A4-70	
69	Fitting	1644793-03	SMS 51 MALE PART	CE For through passage with 2" connection
		1644796-03	DIN 51 NW50 MALE PART	CE For through passage with 2" connection
		1644799-03	IDF 51 MALE PART	CE For through passage with 2" connection
		1644802-03	RJT 51 MALE PART	CE For through passage with 2" connection
		1644805-03	CLAMP 51 NIPPLE	CE For through passage with 2" connection
	Gasket ring		Same as for FP and PP, see above.	

Fitting	Same as for FP and PP, see above.
Flange	Same as for FP and PP, see above.

Blind connection

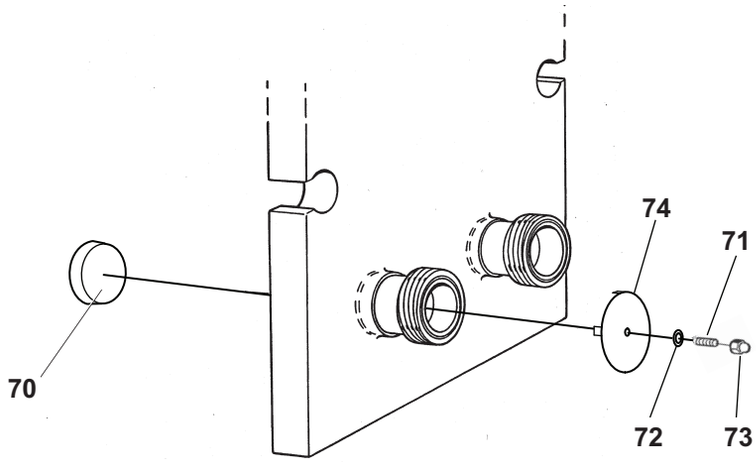

Drawing of blind connection.

Pos	*Denomination*	*AlfaLaval Part No*	*Specification*	*Comments*
70	Blind cover	34505831-01 34505830-01		CE For connection with connection pipe CE For connection without connection pipe
71	Stud bolt	34506206-01 34506205-01	(M8x1.25)x125 (M8x1.25)x75	For connection with connection pipe For connection without connection pipe
72	Washer	223101-33	BRB 8.4 x 16 - 2343	
73	Acron nut	1640387-01		
74	Cap	34506231-01 34506230-01		For connection with connection pipe For connection without connection pipe

Spare Parts Lists Front 10 -Automatic

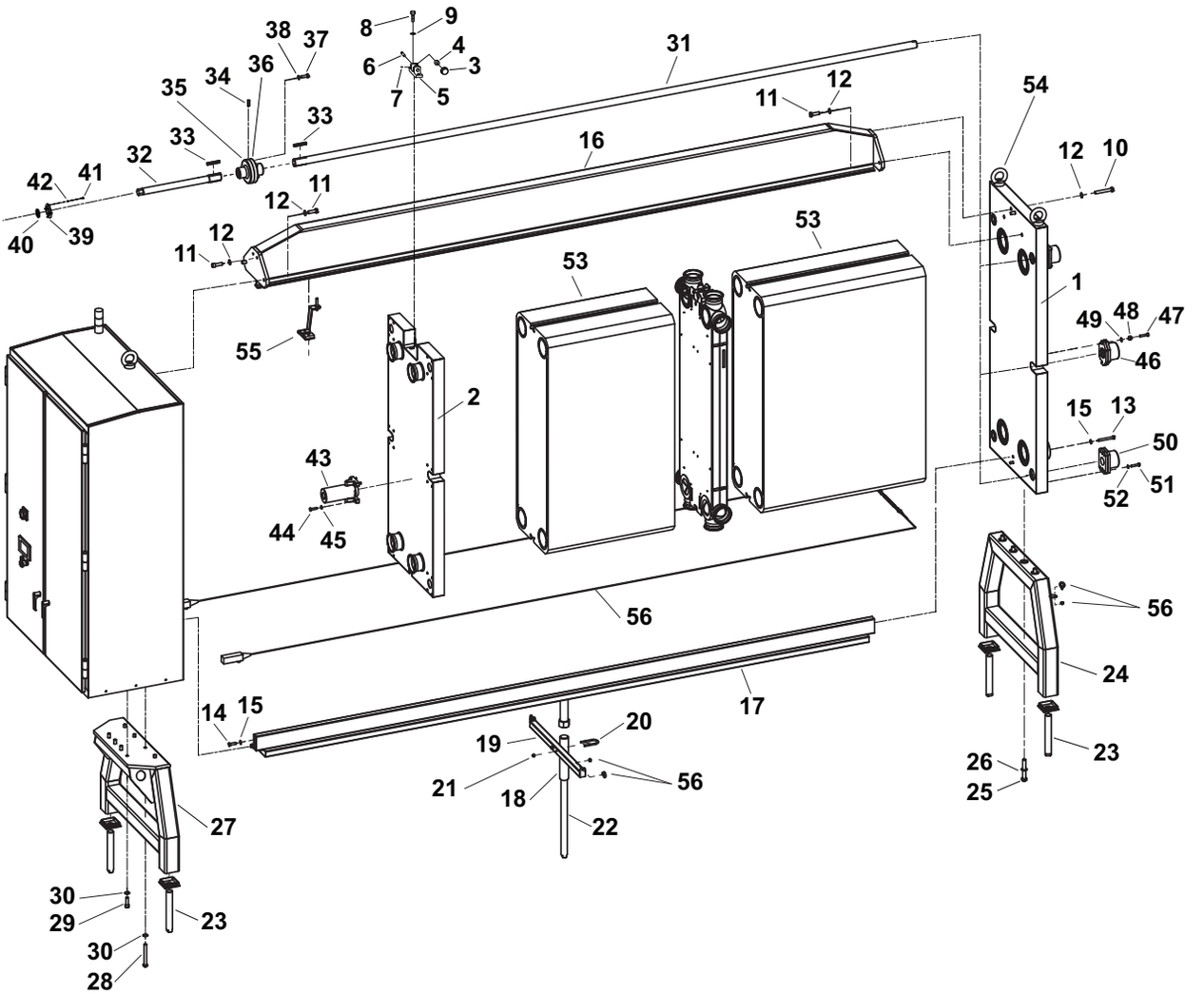

Exploded view of Front 10-Automatic.
8

Frame components

Pos	Denomination	AlfaLaval Part No	Specification	Comments
1	Frame plate	3350002685	4-holed	
2	Pressure plate	3350002682	4-holed	
3	Wheel	82300049-01		
4	Needle bearing	528402-03	NKI 20/16 INA	
5	Bracket	3350001678		
6	Shaft	1620780-01		
7	Stop screw	260080-04	SK6SS 6x8-A4	
8	Screw	260192-31	ISO 4017 - M20 x 60 - A4-70	
9	Washer	223101-39	BRB 21 x 37 - 2343	
10	Screw	2210463-04	ISO 4017 - M16 x 100 - A4-70	
11	Screw	221731-12	MC6S 16x50 - A4-70	
12	Washer	223101-37	BRB 17 x 30 - 2343	
13	Screw	221046-42	ISO 4017 - M12 x 100 - A4-70	
14	Screw	221046-30	ISO 4017 - M12 x 40 - A4-70	
15	Washer	223101-35	BRB 13 x 24 - 2343	
16	Carrying bar	3350002672 3350002650 3350002676	L=3000 L=4200 L=5400	
17	Guiding bar	32323-4001-8 32323-4017-1 32323-4017-4	L=3000 L=4200, with foot L=5400, with foot	
18	Pipe	32323-4128-1		For guiding bar with foot
19	Profile	3350004784	Wire support	For guiding bar with foot
20	U-bolt	3350004793	Wire support	For guiding bar with foot
21	Nut	221851-14	MHM 8 - A4-50	For guiding bar with foot
22	Levelling screw	3350004768	L=830, M39	For guiding bar with foot
23	Levelling screw	1640885-02	L=230, M39	
24	Foot	3350002646		
25	Screw	260192-42	ISO 4017 - M20 x 130 - A4-70	
26	Washer	223101-39	BRB 21 x 37 - 2343	
27	Foot	3350002645		
28	Screw	2210463-17	ISO 4014 - M16 x 140 - A4-70	
29	Screw	2210463-33	ISO 4017 - M16 x 50 - A4-70	
30	Washer	223101-37	BRB 17 x 30 - 2343	
31	Tightening bolt, removable	3350001992 3350002406 3350001998	1 3/4-4 ACME 2G, LC=3000 1 3/4-4 ACME 2G, LC=4200 1 3/4-4 ACME 2G, LC=5400	
32	Gear shaft	3350032355	M39	
33	Shaft key	3350001314	85 mm	
34	Shaft key	3350001311	45.5 mm	
35	Coupling	3350001210		For gear shaft
36	Coupling	3350002417		For tightening bolt
37	Screw	221041-32	ISO 4017 - M10 x 45 - A4-70	
38	Washer	223101-61	BRB 10.5 x 22 - 2343	
39	Guiding ring	3350032347	Seal, cabinet	
40	Gasket	3350032351	Seal ring	
41	Screw	221031-06	ISO 4014 - M6 x 25 - A4-70	
42	Washer	223101-32	BRB 6.4 x 12 - 2343	
43	Fixed nut	3350007990		
44	Screw	221041-31	ISO 4017 - M10 x 40 - A4-70	
45	Washer	223101-61	BRB 10.5 x 22 - 2343	
46	Bearing box	3350032350		For removable bolts
47	Screw	2216135-17	PS M12x65 - A4-70	
48	Nut	221851-15	MHM 12 - A4-50	
49	Washer	223101-35	BRB 13 x 24 - 2343	
50	Bearing box	3350032348		For fixed bolts
51	Screw	221041-33	ISO 4017 - M10 x 50 - A4-70	
52	Washer	223101-61	BRB 10.5 x 22 - 2343	
53	Channel plates			
54	Lifting device	3350005886	Eye bolt, M30	
55	Proximity sensor with bracket	3350024966		
56	Line switch kit	3350025097		

Connections

Connections in frame plate and pressure plate

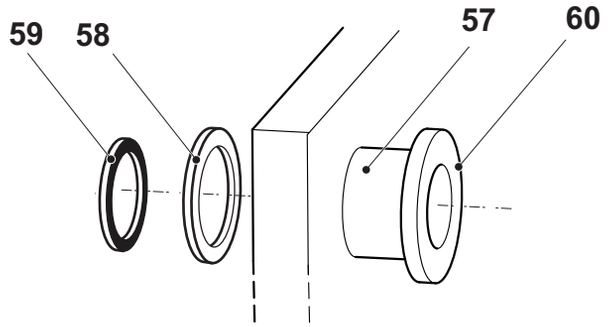

Drawing of connections in frame plate and pressure plate.

Pos	Denomination	AlfaLaval Part No	Specification	Comments
57	Pipe, Ø101	1625369-02		CE 3-A sanitary std
58	Welding ring	3350010972		CE For frame plate
		3350010973		CE For pressure plate
59	Gasket ring	3350003902	EPDMFF	For frame plate
		3350003901	NBRFF	For frame plate
60	Fitting, Ø101	1644805-06	CLAMP 101 NIPPLE	CE

Connections in connection plate

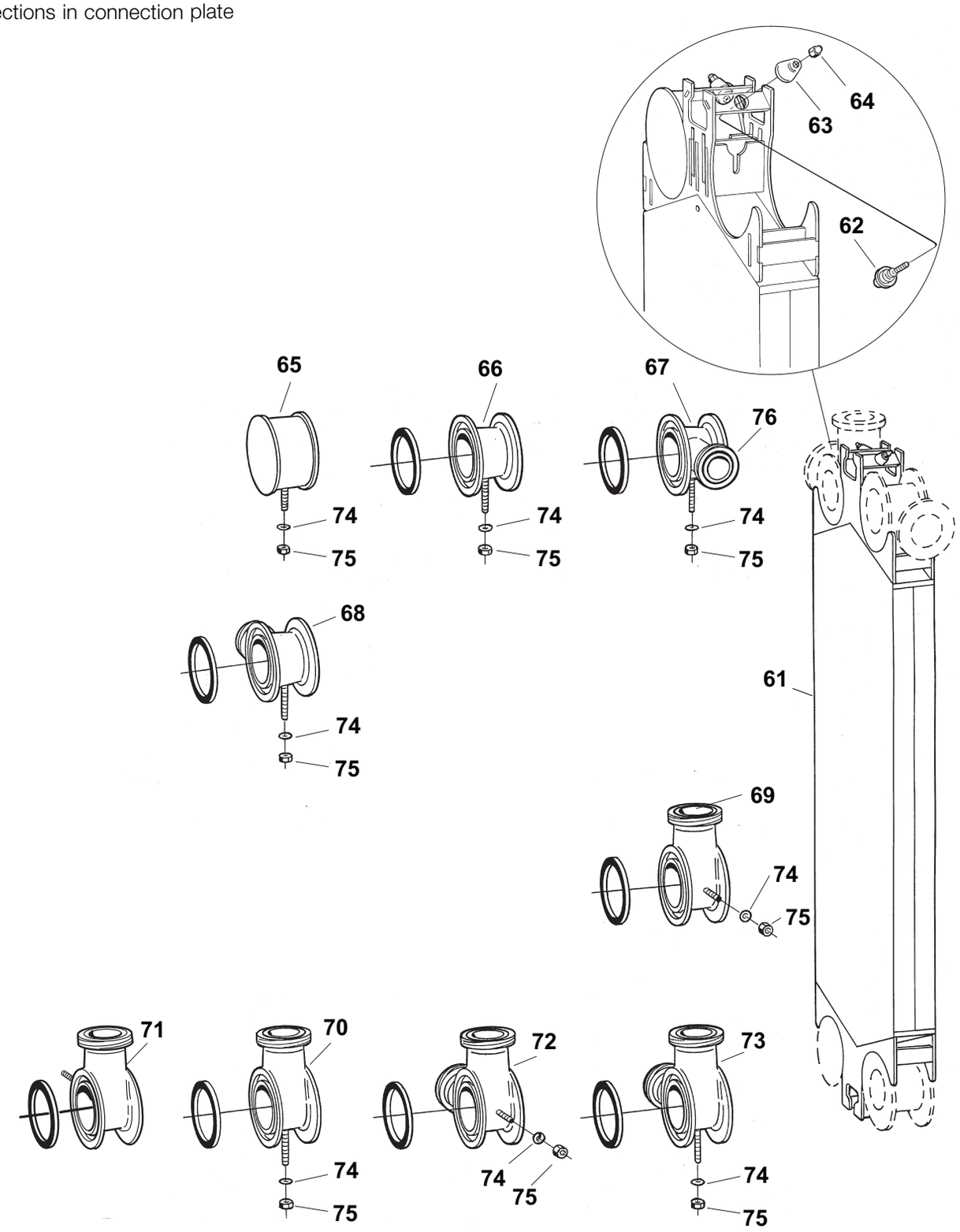

Drawing of connection plate corners.

Pos	*Denomination*	*AlfaLaval Part No*	*Specification*	*Comments*
61	Connection plate	3350001099		CE
62	Bolt	1640386-02	Roller screw	
63	Dished washer	1641849-01		
64	Acron nut	1640387-01		
65	Blind corner	1625368-01		CE

66	Through passage	1625378-02		CE 3-A sanitary std
67	Through passage with 2" connection	1641863-03	Vertical position A-1 and A-3	CE 3-A sanitary std
68	Through passage with 2" connection	1641863-04	Vertical position A-2 and A-4	CE 3-A sanitary std
69	Single corner, Ø101	1641861-07	Vertical position A-1,A-3 if bottom towards frame plate, otherwise A-2,A-4	CE 3-A sanitary std
70	Single corner, Ø101	1641861-08	Horizontal all positions	CE 3-A sanitary std
71	Single corner, Ø101	1641861-09	Vertical position A-2,A-4 if bottom towards frame plate, otherwise A-1,A-3	CE 3-A sanitary std
72	Double corner, Ø101	1641862-05	Position A-1 and A-3	CE 3-A sanitary std
73	Double corner, Ø101	1641862-06	Position A-2 and A-4	CE 3-A sanitary std
74	Washer	223101-61	BRB 10.5 x 22 - 2343	
75	Nut	221803-29	ISO 4032 - M10 - A4-70	
76	Fitting, Ø51	1644805-03	CLAMP 51 NIPPLE	CE For through passage with 2" connection
	Gasket ring		Same as for FP and PP, see above.	
	Fitting, Ø101	1644805–07	CLAMP 101 NIPPLE	CE

Blind connection

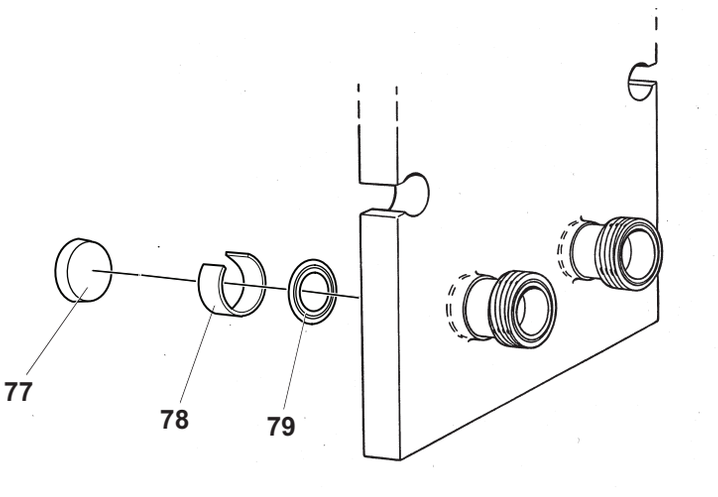

Drawing of blind connection.

Pos	Denomination	AlfaLaval Part No	Specification	Comments
77	Blind cover	3350019754		CE For connection without connection pipe
		1625345-01		CE For connection with connection pipe
78	Spring	32324-7909-1		CE For connection with connection pipe
79	Gasket ring	3350003902	EPDMFF	For frame plate
		3350003901	NBRFF	For frame plate

Cabinet

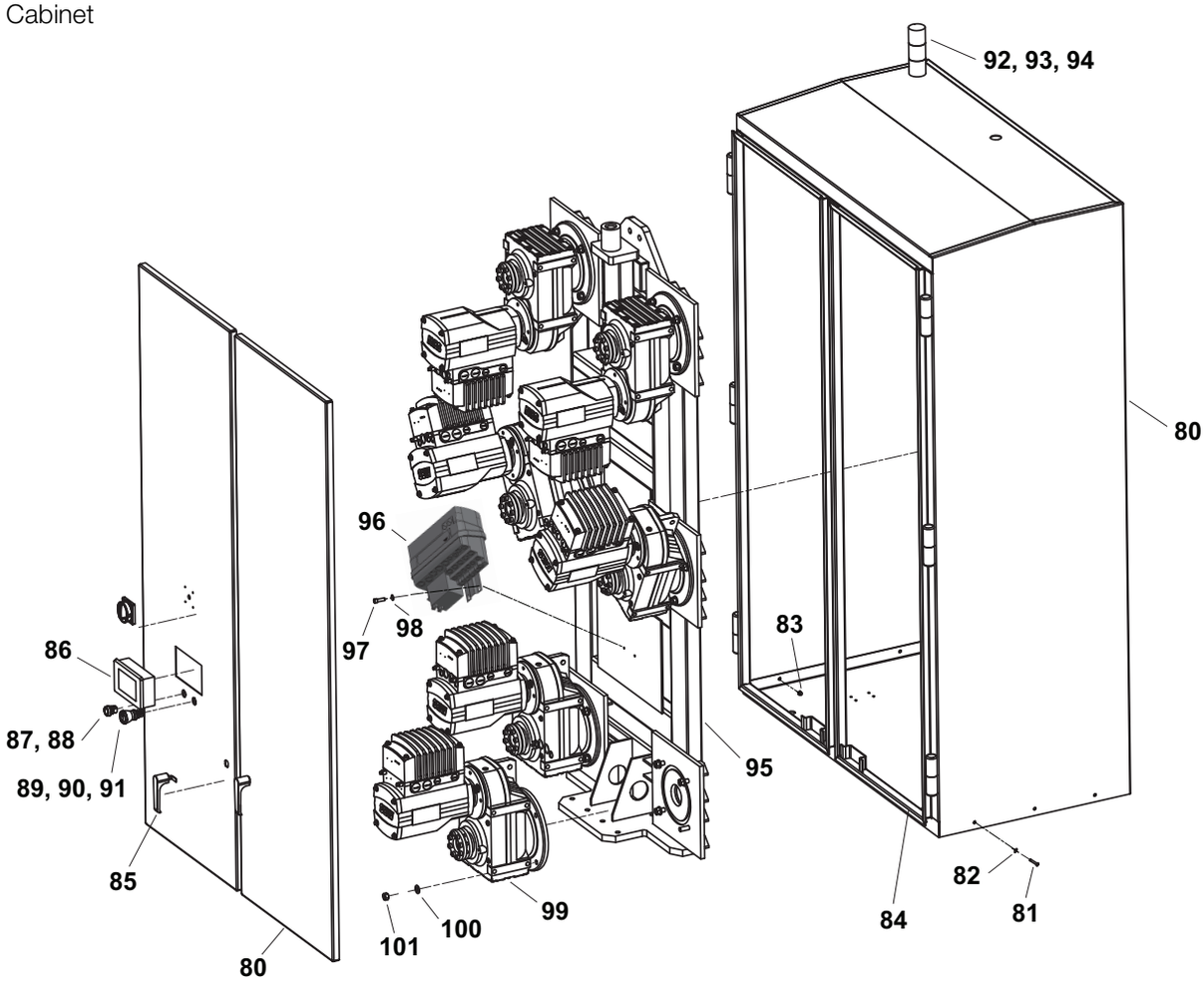

Drawing of cabinet.

Pos	*Denomination*	*AlfaLaval Part No*	*Specification*	*Comments*
80	Main cabinet	3350032522		
81	Screw	221031-27	ISO 4017 - M6 x 14 - A4-70	
82	Washer	223101-47	BRB 6.4 x 12 - 8.8	
83	Nut	221803-28	ISO 4032 - M6 - A4-70	
84	Gasket	3350005858		For cabinet door
85	Handle	3350005857		
86	Keypad	3350032416		
87	Push button	3350032580		
88	Push button holder	3350032420		
89	Emergency stop	3350032423		
90	Push button holder	3350032426		
91	Emergency stop label	3350032425		
92	Red light	3350032429		
93	Amber light	3350032430		
94	Base of the tower	3350032431		
95	Gear frame	3350032524		
96	Drive for motors	3350032415		
97	Screw	221031-01	ISO 4017 - M6 x 22 - A4-70	
98	Washer	223101-47	BRB 6.4 x 12 - 8.8	
99	Gear motor	3350032417		
100	Washer	223101-49	BRB 13 x 24 - 8.8	
101	Nut	221803-33	ISO 4032 - M12 - 8	
	Rail to mount components	3350032360		
	End anchor	3350032361		
	3-pole 10 A breaker	3350032362		
	Terminal block 2	3350032363		
	Safety relay	3350032364		
	Power supply	3350032411		

	Jumper for terminal blocks	3350032412
	Terminal block	3350032413
	Terminal block end cap	3350032414
	Power switch block	3350032418
	Power switch	3350032419
	Push button block	3350032421
	Push button block	3350032424
	Door interlocks	3350032427
	4-pin yellow cable	3350032428
	Proximity switch	3350032432

Spare Parts Lists M3 -BASE

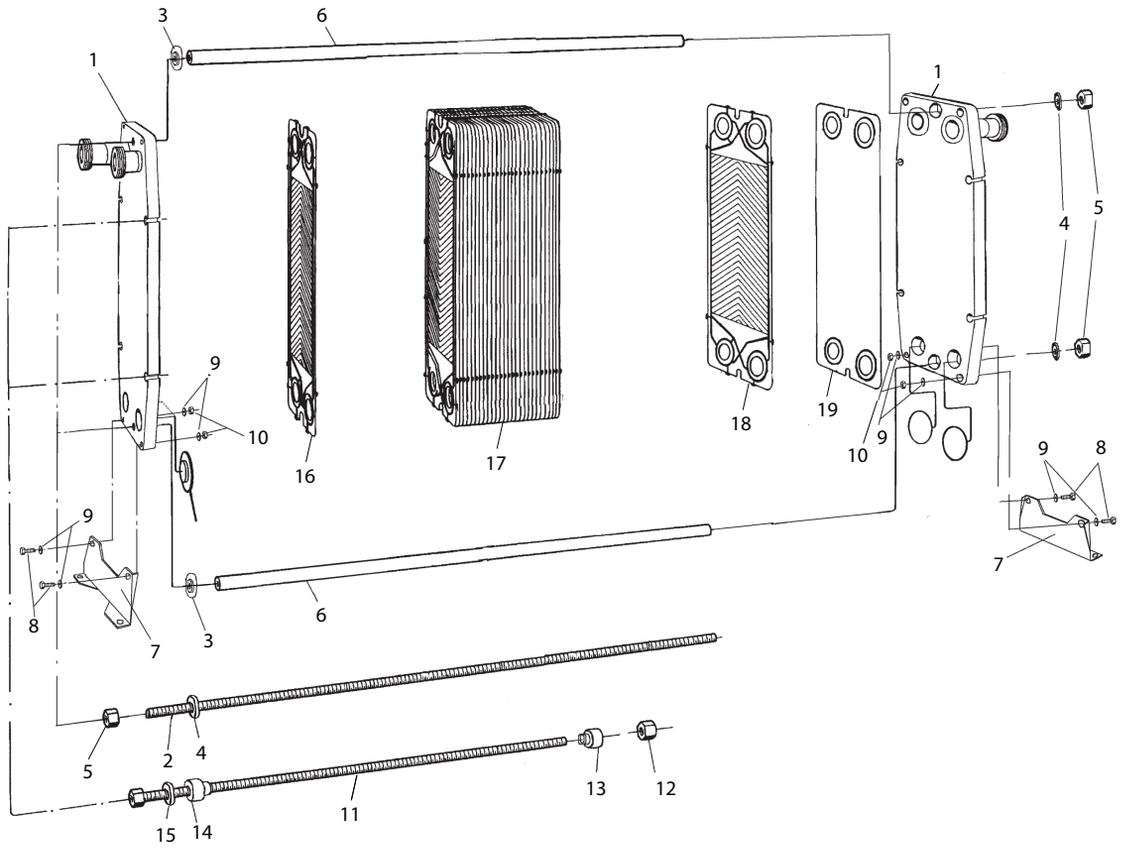

Exploded view of M3-BASE.
4

Frame components

Pos	*Denomination*	*AlfaLaval Part No*	*Specification*	*Comments*
1	Frame/pressure plate	3350022483		CE
		3350038352	0H	EN 13445
		3350038353	H12/34	EN 13445
2	Bolt	1624422-01	M12, L=220 MM	
		1624422-02	M12, L=340 MM	
		1624422-03	M12, L=490 MM	
3	Washer	1623469-01		
4	Washer	223101-35	BRB 13 x 24 - 2343	
5	Nut	221803-22	ISO 4032 - M12 - A4-70	
6	Carrying/guiding bar	1623467-01	L=170 MM	
		1623467-02	L=290 MM	
		1623467-03	L=440 MM	
7	Foot	1627507-01	Fixed	
		34506455-01	High	
8	Screw	221046-30	ISO 4017 - M12 x 40 - A4-70	
9	Washer	223101-35	BRB 13 x 24 - 2343	
10	Nut	221803-22	ISO 4032 - M12 - A4-70	
11	Tightening bolt	34504002-01	M16, L=210	CE
		34504003-01	M16, L=330	CE
		34504004-01	M16, L=480	CE
12	Nut	1641665-01	M16, L=30	CE
13	Lock washer	1624421-01		
14	Guide washer	1624424-01		
15	Wearing washer	223101-37	BRB 17 x 30 - 2343	
16	End plate II			
17	Channel plates			
18	End plate I			
19	Transition plate			
	Ratchet spanner	32220-3100-6	M16, NV24	Assembling tool
	Protection sheet		Available for the Plate Heat Exchanger, contact your local Alfa Laval Representative for more information on how to order.	

Connections

Connections in frame plate and pressure plate

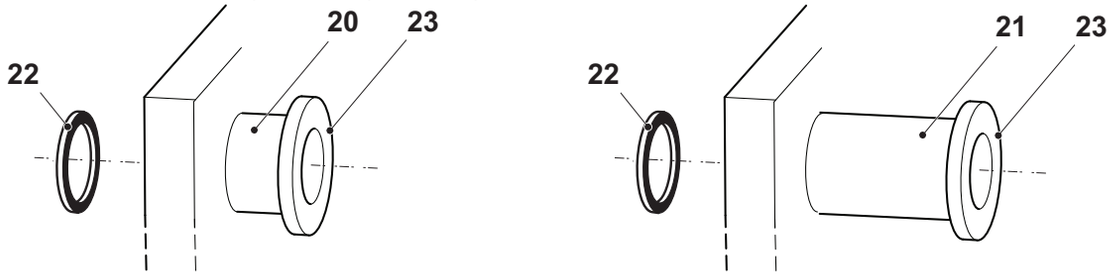

Drawing of connections in frame plate and pressure plate.

Pos	Denomination	AlfaLaval Part No	Specification	Comments
20	Pipe, Ø25	3350001270	Short	CE
		3350001293	Short	CE 3-A sanitary std
		3350026283	Alloy 254, Short	CE
		3350026284	Alloy 254, Short	CE 3-A sanitary std
21	Pipe, Ø25	3350001273	Long	CE
		3350001294	Long	CE 3-A sanitary std
		3350029864	Alloy 254, Long	CE
		3350029865	Alloy 254, Long	CE 3-A sanitary std
22	Welding ring	3350001267		CE
		3350026281	Alloy 254	CE
23	Fitting	1644793-01	SMS 25 MALE PART	CE
		1644796-01	DIN 25 MALE PART	CE
		1644799-01	IDF 25 MALE PART	CE
		1644802-01	RJT 25 MALE PART	CE
		1644805-01	CLAMP 25 NIPPLE	CE
		3350026209	Alloy 254, SMS 25 MALE PART	CE
		3350026211	Alloy 254, DIN 25 MALE PART	CE
		3350026217	Alloy 254, CLAMP 25 NIPPLE	CE

Blind connection

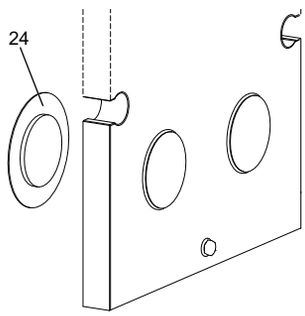

Drawing of blind connection.

Pos	Denomination	AlfaLaval Part No	Specification	Comments
24	Blind cover	1626345-01		CE

Spare Parts Lists M6 -BASE

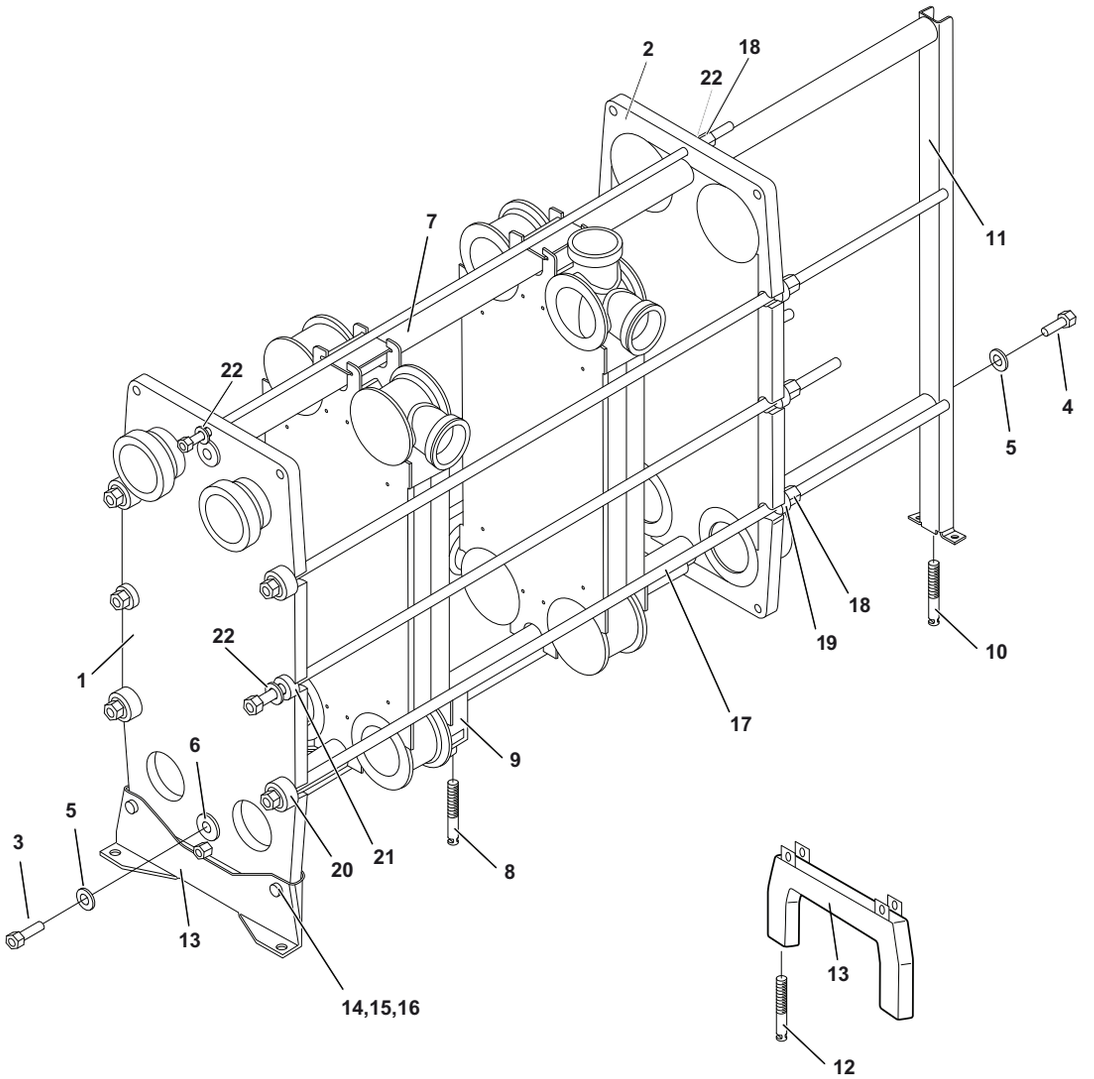

View from frame plate side of M6-BASE.
4

Frame components

Pos	*Denomination*	*AlfaLaval Part No*	*Specification*	*Comments*
1	Frame plate	34503922-01	4-holed	CE
		34503921-01	3-holed	CE
		34503919-01	2-holed S1 S2 or S3 S4	CE
		34503920-01	2-holed S1 S3 or S2 S4	CE
		34503918-01	2-holed S1 S4 or S2 S3	CE
		34503917-01	1-holed	CE
		34503916-01	Unholed	CE
2	Pressure plate	34503922-01	4-holed	CE
		34503921-01	3-holed	CE
		34503919-01	2-holed T1 T2 or T3 T4	CE
		34503920-01	2-holed T1 T3 or T2 T4	CE
		34503918-01	2-holed T1 T4 or T2 T3	CE
		34503917-01	1-holed	CE
		34503916-01	Unholed	CE
3	Screw	2210463-06	ISO 4014 - M16 x 55 - A4-70	
4	Screw	2210463-03	ISO 4017 - M16 x 40 - A4-70	
		2210463-39	ISO 4017 - M16 x 80 - A4-70	Valid for 3-A sanitary std
5	Washer	223101-37	BRB 17 x 30 - 2343	
6	Washer	3350000762		
7	Carrying/guiding bar	3350000513	L=450	
		3350000514	L=600	
		3350000515	L=750	
		3350000516	L=900	
		3350000517	L=1200	
		3350000518	L=1500	
		3350000757	L=1800	
		3350028000	L=2020	Only for M6-M plates together with foot for PP.
		3350026576	L=2300	Only for M6-M plates together with foot for PP.
8	Levelling screw	34505707-01	M20, L=80	For L≥1500 together with fixed FP foot
		34505708-01	M20, L=170	For L≥1500 together with low FP foot
		34505709-01	M20, L=200	For L≥1500 together with high FP foot
9	Foot	3350000884		For L≥1500 together with fixed FP foot
		3350000885		For L≥1500 together with low FP foot
		3350000886		For L≥1500 together with high FP foot
10	Levelling screw	1642691-02	M20, L=185	Valid together with low or high FP foot
11	Support column	3350000809		Valid together with fixed FP foot
		3350000599		Valid together with low FP foot
		3350000600		Valid together with high FP foot
		3350029718		Valid together with low FP foot, 3-A sanitary std
		3350029716		Validtogether with high FP foot, 3-A sanitary std
12	Levelling screw	1642691-01	M20, L=125	For low foot
		1642691-02	M20, L=185	For high foot
13	Foot	1627508-01	Fixed	
		1642686-02	Low, adjustable	
		1642687-02	High, adjustable	
14	Screw	221046-08	ISO 4014 - M12 x 55 - A4-70	
15	Washer	223101-35	BRB 13 x 24 - 2343	
16	Nut	221803-22	ISO 4032 - M12 - A4-70	
17	Tightening bolt	34504003-01	M16, L=330	CE
		34504004-01	M16, L=480	CE
		34504005-01	M16, L=630	CE
		34504006-01	M16, L=780	CE
		34504007-01	M16, L=930	CE
		34504008-01	M16, L=1080	CE
		34504010-01	M16, L=1380	CE
		34504011-01	M16, L=1680	CE
		3350026579	M16, L=1900	CE Only for M6-M plates together with foot for PP.
		3350026552	M16, L=2200	CE Only for M6-M plates together with foot for PP.
18	Nut	1641665-01	M16	CE
19	Lock washer	1624421-01		
20	Bearing box	1624417-01	M16	
21	Guide washer	1624424-01		
22	Wearing washer	223101-37	BRB 17 x 30 - 2343	
	Partition plate	1620163-01	Unholed	
		1620163-02	1-holed	
		1620163-03	2-holed PA1 PA2 or PA3 PA4	
		1620163-05	2-holed PA1 PA3 or PA2 PA4	
		1620163-06	2-holed PA1 PA4 or PA2 PA3	
		1620163-04	3-holed	
		1620163-07	4-holed	

Ratchet spanner	32220-3100-6	M16, NV24	Assembling tool
Protection sheet		Available for the Plate Heat Exchanger, contact your local Alfa Laval Representative for more information on how to order.	
	3350000635	Sign	For protection sheet.

Connections

Connections in frame plate and pressure plate, Ø 51 mm

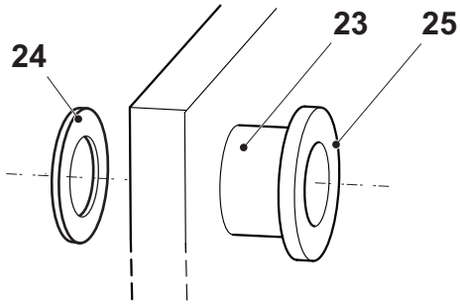

Drawing of connections, Ø 51 mm.

Pos	*Denomination*	*AlfaLaval Part No*	*Specification*	*Comments*
23	Pipe	3350001269		CE
		3350001292		CE 3-A sanitary std
		3350026231	Alloy 254	CE
		3350026232	Alloy 254	CE 3-A sanitary std
24	Welding ring	3350001266		CE
		3350026229	Alloy 254	CE
25	Fitting	1644793-03	SMS 51 MALE PART	CE
		1644796-03	DIN 51 MALE PART	CE
		1644799-03	IDF 51 MALE PART	CE
		1644802-03	RJT 51 MALE PART	CE
		1644805-03	CLAMP 51 NIPPLE	CE
		3350026208	Alloy 254, SMS 51 MALE PART	CE
		3350026212	Alloy 254, DIN 51 MALE PART	CE
		3350026218	Alloy 254, CLAMP 51 NIPPLE	CE

Connections in frame plate and pressure plate, DN50

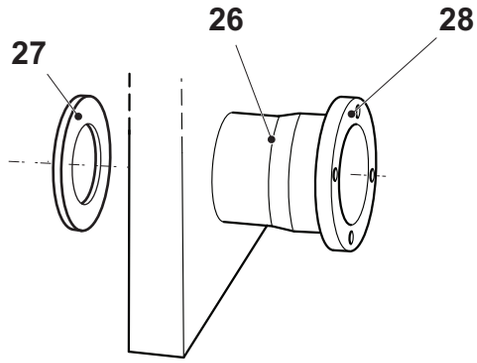

Drawing of connections, DN50.

Pos	*Denomination*	*AlfaLaval Part No*	*Specification*	*Comments*
26	Pipe	3350018137		CE
		3350026241	Alloy 254	CE
27	Welding ring	3350001266		CE
		3350026229	Alloy 254	CE
28	Flange	3350017920	DIN 11864-2 DN50	CE
		3350018009	FG1 PN10 DN50	CE
		3350018005	FN1 PN10 DN50	CE
		3350026254	Alloy 254, DIN 11864-2 DN50	CE

Connections in connection plate

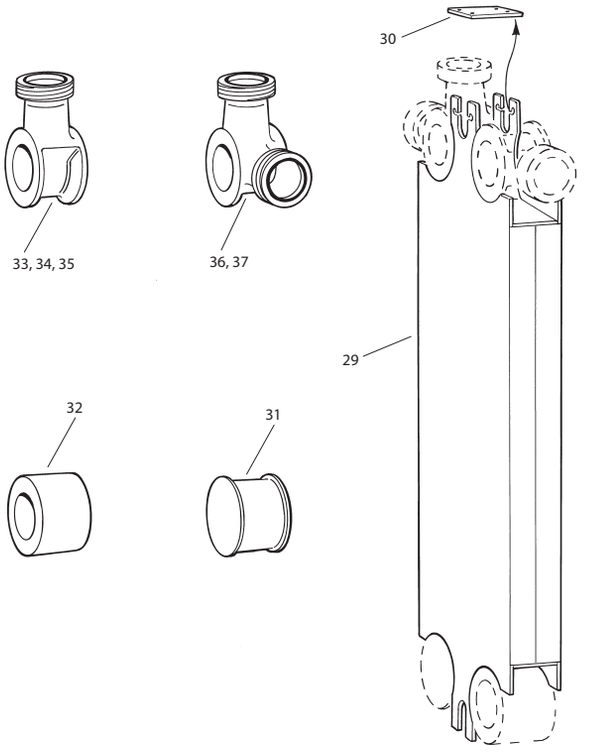

Drawing of connection plate.

Pos	*Denomination*	*AlfaLaval Part No*	*Specification*	*Comments*
29	Connection plate	1642699-01		CE
30	Holder	1642698-01		
31	Blind corner	32325-5410-1		CE
32	Through passage	1625189-02		CE
		1625189-03		CE 3-A sanitary std
		3350026278	Alloy 254	CE
		3350026279	Alloy 254	CE 3-A sanitary std
33	Single corner through passage	3350003958		CE 3-A sanitary std
34	Single corner	32325-5406-2		CE
		32325-5406-3		CE 3-A sanitary std
		3350026243	Alloy 254	CE
		3350026244	Alloy 254	CE 3-A sanitary std
35	Single corner, DN50	3350018116		CE
		3350026248	Alloy 254	CE
36	Double corner	32325-5408-2		CE
		32325-5408-3		CE 3-A sanitary std
		3350026251	Alloy 254	CE
		3350026252	Alloy 254	CE 3-A sanitary std
37	Double corner, DN50	3350018117		CE
		3350026253	Alloy 254	CE
	Fitting		Same as for FP and PP, see above.	
	Flange		Same as for FP and PP, see above.	

Blind connection

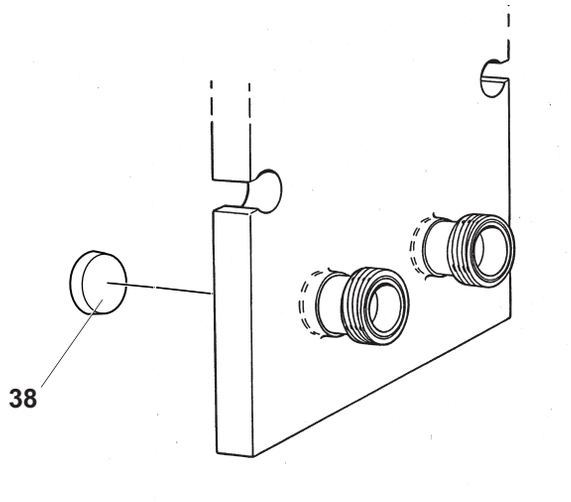

Drawing of blind connection.

Pos	*Denomination*	*AlfaLaval Part No*	*Specification*	*Comments*
38	Blind cover	32324-4507-1		CE

Spare Parts Lists M10 -BASE

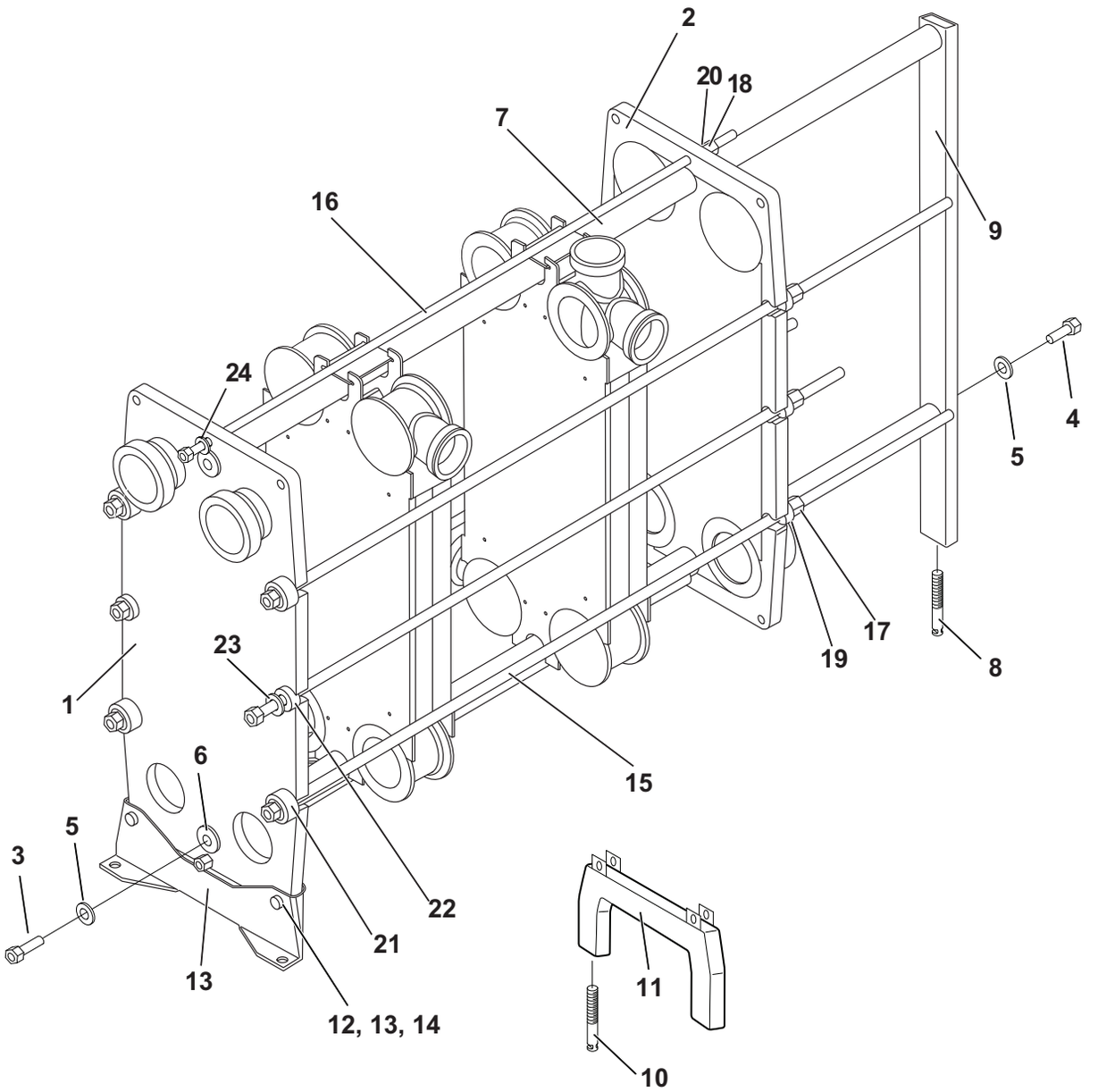

View from frame plate side of M10-BASE.
4

Frame components

Pos	Denomination	AlfaLaval Part No	Specification	Comments
1	Frame plate	34503929-01	4-holed	CE
		34503928-01	3-holed	CE
		34503926-01	2-holed S1 S2 or S3 S4	CE
		34503927-01	2-holed S1 S3 or S2 S4	CE
		34503925-01	2-holed S1 S4 or S2 S3	CE
		34503924-01	1-holed	CE
		34503923-01	Unholed	CE
2	Pressure plate	34503929-01	4-holed	CE
		34503928-01	3-holed	CE
		34503926-01	2-holed T1 T2 or T3 T4	CE
		34503927-01	2-holed T1 T3 or T2 T4	CE
		34503925-01	2-holed T1 T4 or T2 T3	CE
		34503924-01	1-holed	CE
		34503923-01	Unholed	CE
3	Screw	2210463-09	ISO 4014 - M16 x 70 - A4-70	
4	Screw	2210463-03	ISO 4017 - M16 x 40 - A4-70	
		2210463-39	ISO 4017 - M16 x 80 - A4-70	Valid for 3-A sanitary std
5	Washer	223101-37	BRB 17 x 30 - 2343	
6	Washer	3350000770		
7	Carrying/guiding bar	3350000519	L=530	
		3350000520	L=730	
		3350000521	L=1030	
		3350000522	L=1330	
		3350000523	L=1530	
		3350000524	L=1830	
		3350000598	L=2100	
8	Levelling screw	1640848-01	L=200, M30	Valid together with low FP foot
		1640848-02	L=250, M30	Valid together with high FP foot
9	Support column	3350000810		Valid together with fixed FP foot
		3350000601		Valid together with low FP foot
		3350000602		Valid together with high FP foot
		3350029714		Valid together with low FP foot, 3-A sanitary std
		3350029712		Valid together with high FP foot, 3-A sanitary std
10	Levelling screw	1640848-01	L=200, M30	For low foot
		1640848-02	L=250, M30	For high foot
11	Foot	1627509-01	Fixed	
		1642631-02	Low, adjustable	
		1642632-02	High, adjustable	
12	Screw	2210463-08	ISO 4014 - M16 x 65 - A4-70	
13	Washer	223101-37	BRB 17 x 30 - 2343	
14	Nut	221803-40	ISO 4032 - M16 - A4-70	
15	Tightening bolt	34504022-01	M20, L=360	CE
		34504023-01	M20, L=560	CE
		34504024-01	M20, L=860	CE
		34504025-01	M20, L=1160	CE
		34504026-01	M20, L=1460	CE
		34504027-01	M20, L=1760	CE
		34504028-01	M20, L=2060	CE
16	Tightening bolt	34504003-01	M16, L=330	CE
		34504004-01	M16, L=480	CE
		34504006-01	M16, L=780	CE
		34504007-01	M16, L=930	CE
		34504008-01	M16, L=1080	CE
		34504010-01	M16, L=1380	CE
		34504011-01	M16, L=1680	CE
17	Nut	1641666-01	M20	CE
18	Nut	1641665-01	M16	CE
19	Lock washer	1641230-01		
20	Washer	223101-37	BRB 17 x 30 - 2343	
21	Bearing box	1641223-01	M20	
22	Guide washer	1642588-01	M20	
23	Wearing washer	223101-39	BRB 21 x 37 - 2343	
24	Washer	223101-37	BRB 17 x 30 - 2343	
	Partition plate	1620941-01	Unholed	
		1620941-02	1-holed	
		1620941-03	2-holed PA1 PA2 or PA3 PA4	
		1620941-04	2-holed PA1 PA3 or PA2 PA4	
		1620941-05	2-holed PA1 PA4 or PA2 PA3	
		1620941-06	3-holed	
		1620941-07	4-holed	
	Ratchet spanner	32220-3100-6	M16, NV24	Assembling tool
		32220-3102-01	M20, NV30	Assembling tool
	Protecting sheet		Available for the Plate Heat Exchanger, contact your local Alfa Laval Representative for more information on how to order.	

	3350000635	Sign	For protecting sheet.

Connections

Connections in frame plate and pressure plate, Ø 101 mm

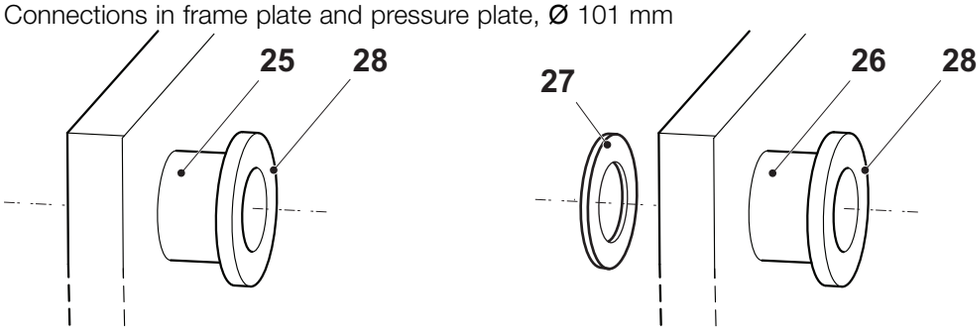

Drawing of connections, Ø 101 mm

Pos	Denomination	AlfaLaval Part No	Specification	Comments
25	Pipe	34503915-01		CE
		34503915-02		CE 3-A sanitary std
26	Pipe	3350001268		CE
		3350001291		CE 3-A sanitary std
		3350026287	Alloy 254	CE
		3350026288	Alloy 254	CE 3-A sanitary std
27	Welding ring	3350001265		CE
		3350026285	Alloy 254	CE
28	Fitting	1644793-06	SMS 101 MALE PART	CE
		1644796-06	DIN 101 MALE PART	CE
		1644799-06	IDF 101 MALE PART	CE
		1644802-06	RJT 101 MALE PART	CE
		1644805-06	CLAMP 101 NIPPLE	CE
		3350026210	Alloy 254, SMS 101 MALE PART	CE
		3350026214	Alloy 254, DIN 101 MALE PART	CE
		3350026219	Alloy 254, CLAMP 101 NIPPLE	CE

Connections in frame plate and pressure plate, DN100

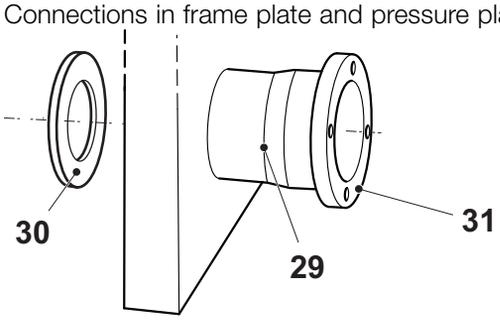

Drawing of connections, DN100

Pos	Denomination	AlfaLaval Part No	Specification	Comments
29	Pipe	3350018142		CE
		3350026291	Alloy 254	CE
30	Welding ring	3350001265		CE
		3350026285	Alloy 254	CE
31	Flange	3350017922	DIN 11864-2 DN100	CE
		3350018011	FG1 PN10 DN100	CE
		3350018007	FN1 PN10 DN100	CE
		3350026307	Alloy 254, DIN 11864-2 DN100	CE

Connections in connection plate

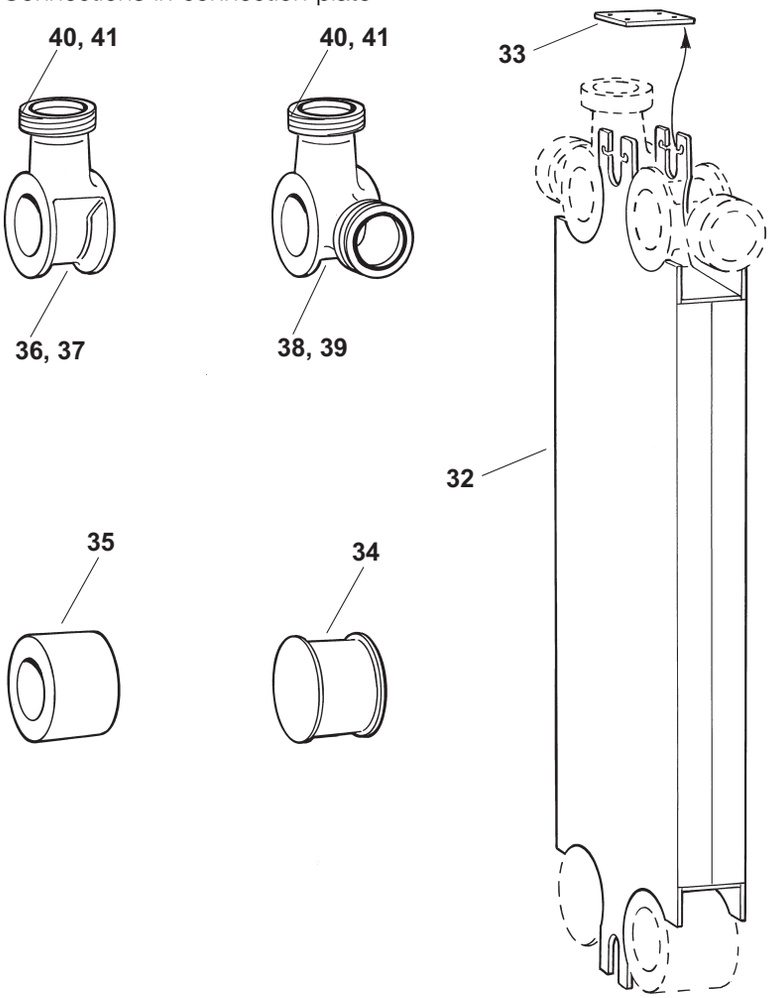

Drawing of connection plate corners

Pos	*Denomination*	*AlfaLaval Part No*	*Specification*	*Comments*
32	Connection plate	1642684-01		CE
33	Holder	1642683-01		
34	Blind corner	34500100-01		CE
35	Through passage	34500073-01		CE
		34500073-02		CE 3-A sanitary std
		3350026310	Alloy 254	CE
		3350026311	Alloy 254	CE 3-A sanitary std
36	Single corner, Ø76	1644859-01		CE
		1644859-02		CE 3-A sanitary std
		3350026294	Alloy 254	CE
		3350026295	Alloy 254	CE 3-A sanitary std
37	Single corner, DN80	3350018132		CE
		3350026296	Alloy 254	CE
38	Double corner, Ø76	32325-5317-2		CE
		32325-5317-3		CE 3-A sanitary std
		3350026298	Alloy 254	CE
		3350026299	Alloy 254	CE 3-A sanitary std
39	Double corner, DN80	3350018133		CE
		3350026303	Alloy 254	CE
40	Fitting, Ø76	1644793-05	SMS 76 MALE PART	CE
		34503161-01	DIN 76 MALE PART, Inside tappered	CE
		1644799-05	IDF 76 MALE PART	CE
		1644802-05	RJT 76 MALE PART	CE
		1644805-05	CLAMP 76 NIPPLE	CE
		3350026151	Alloy 254, SMS 76 MALE PART	CE
		3350026215	Alloy 254, DIN 76 MALE PART, Inside tappered	CE
		3350026147	Alloy 254, CLAMP 76 NIPPLE	CE
41	Flange, DN80	3350017921	DIN 11864-2 DN80	CE
		3350018010	FGN1 PN10 DN80	CE
		3350026160	Alloy 254, DIN 11864-2 DN80	CE

Blind connection

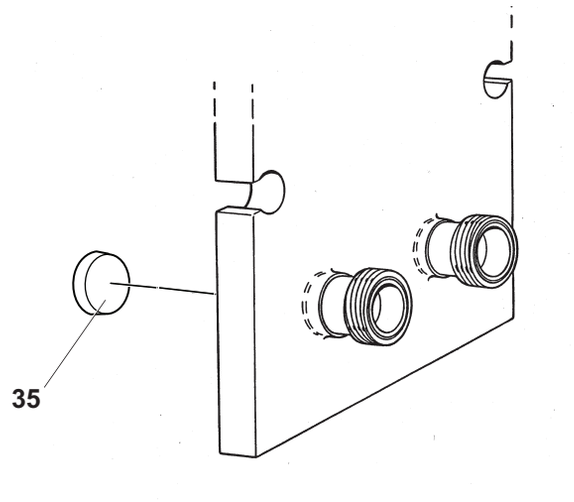

Drawing of blind connection

Pos	*Denomination*	*AlfaLaval Part No*	*Specification*	*Comments*
42	Blind cover	32324-3706-5		CE

Spare Parts Lists TL10 -BASE

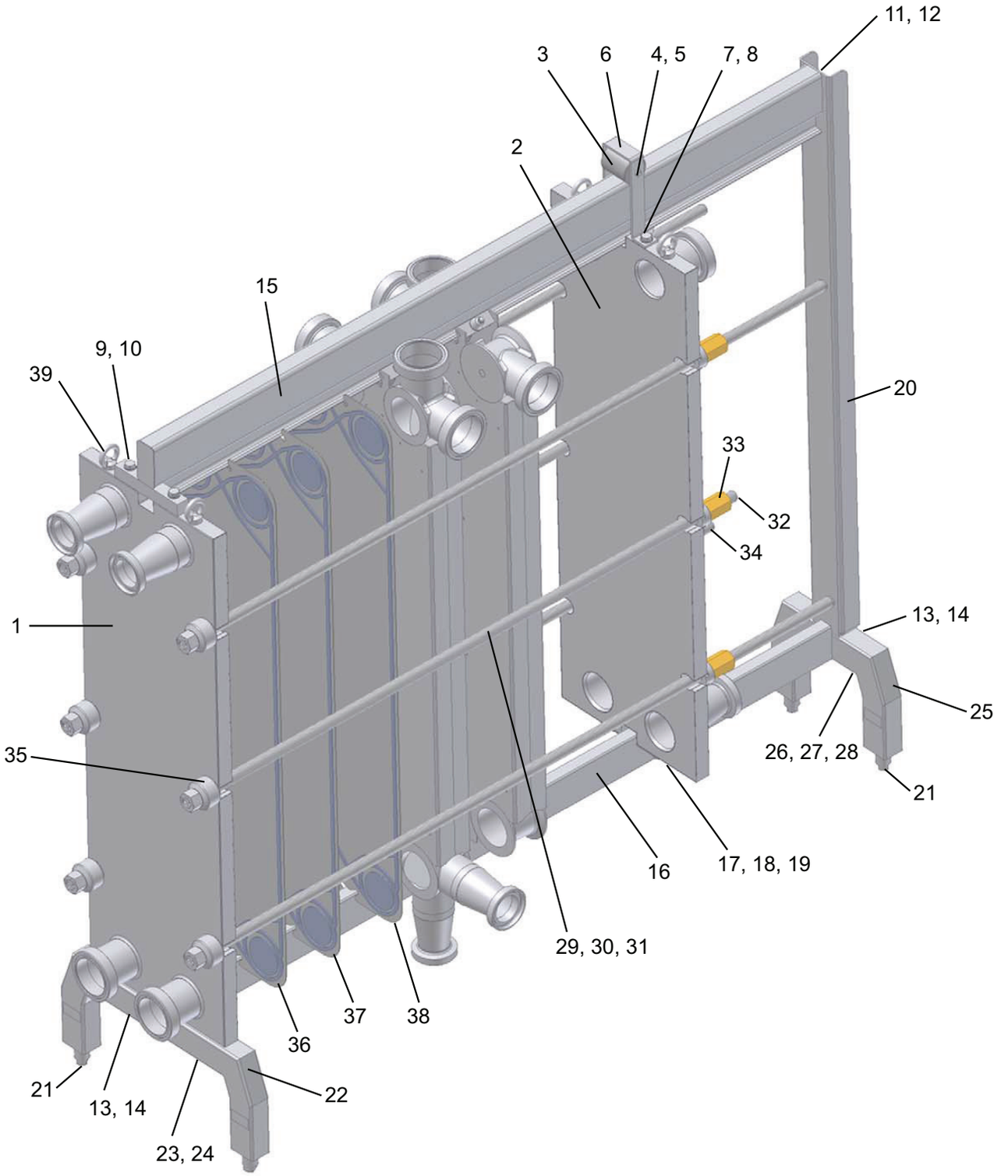

View from frame plate side of TL10-BASE.
5

Frame components

Pos	Denomination	AlfaLaval Part No	Specification	Comments
1	Frame plate	3350000093	Unholed	CE
		3350000094	1-holed S1 or S3	CE
		3350000095	1-holed S2 or S4	CE
		3350000096	2-holed S1 S4 or S2 S3	CE
		3350000097	2-holed S1 S2 or S3 S4	CE
		3350000098	2-holed S1 S3	CE
		3350000099	2-holed S2 S4	CE
		3350000100	3-holed S1 S2 S3 or S1 S3 S4	CE
		3350000101	3-holed S1 S2 S4 or S2 S3 S4	CE
		3350000102	4-holed	CE
2	Pressure plate	3350000093	Unholed	CE
		3350000094	1-holed T2 or T4	CE
		3350000095	1-holed T1 or T3	CE
		3350000096	2-holed T1 T4 or T2 T3	CE
		3350000097	2-holed T1 T2 or T3 T4	CE
		3350000098	2-holed T2 T4	CE
		3350000099	2-holed T1 T3	CE
		3350000100	3-holed T1 T2 T4 or T2 T3 T4	CE
		3350000101	3-holed T1 T2 T3 or T1 T3 T4	CE
		3350000102	4-holed	CE
3	Roller	34503616-01		
4	Shaft	34503615-01		
5	Pin	222210-32		
6	Roller holder	34503614-01		
7	Screw	2210463-03	ISO 4017 - M16 x 40 - A4-70	
8	Washer	223101-37	BRB 17 x 30 - 2343	
9	Screw	2210463-07	ISO 4014 - M16 x 60 - A4-70	
10	Washer	223101-37	BRB 17 x 30 - 2343	
11	Screw			
12	Washer			
13	Screw	221046-38	ISO 4017 - M12 x 80 - A4-70	
14	Washer	223101-35	BRB 13 x 24 - 2343	
15	Carrying bar	34503691-01	L=950	
		34503692-01	L=1250	
		34503693-01	L=1550	
		34503694-01	L=1850	
		34503695-01	L=2150	
		34503696-01	L=2450	
		34503697-01	L=2750	
16	Guiding bar	34503569-01	L=900	
		34503570-01	L=1200	
		34503577-01	L=1500	
		34503578-01	L=1800	
		34503579-01	L=2100	
		34503580-01	L=2400	
		34503581-01	L=2700	
17	Guiding bar fixing plate	34503617-01		
18	Screw	2210463-03	ISO 4017 - M16 x 40 - A4-70	
19	Washer	223101-37	BRB 17 x 30 - 2343	
20	Support column	34503583-01		
21	Levelling screw	1640885-02	L=230, M39	For low foot
		34503801-01	L=280, M39	For high foot
22	Foot	34503593-01	Low	
		34506461-01	High	
		3350029710	Low	3-A sanitary std
		3350029700	High	3-A sanitary std
23	Screw	2210463-02	ISO 4017 - M16 x 30 - A4-70	
		2210463-14	ISO 4014 - M16 x 110 - A4-70	Valid for 3-A sanitary std
24	Washer	223101-37	BRB 17 x 30 - 2343	
25	Foot	34503594-01	Low	
		34506466-01	High	
		3350029705	Low	3-A sanitary std
		3350029695	High	3-A sanitary std
26	Screw	2210463-03	ISO 4017 - M16 x 40 - A4-70	
		2210463-14	ISO 4014 - M16 x 110 - A4-70	Valid for 3-A sanitary std
27	Washer	223101-37	BRB 17 x 30 - 2343	
28	Nut	221803-40	ISO 4032 - M16 - A4-70	
29	Tightening bolt	1624463-02	M30, L=860	CE
		1624463-03	M30, L=1160	CE
		1624463-04	M30, L=1460	CE
		1624463-05	M30, L=1760	CE
		1624463-06	M30, L=2060	CE
		1624463-07	M30, L=2360	CE
		3350019738	M30, L=2660	CE

30	Plastic tube	1995-101-082	ID=32	
31	Protecting tube	1641358-02	L=664	
		1641358-03	L=964	
		1641358-04	L=1264	
		1641358-05	L=1564	
		1641358-06	L=1864	
		1641358-07	L=2164	
		1641358-15	L=2464	
32	Cap	1641360-04		
33	Nut	1641668-02	M30, L=80	CE
34	Lock washer	32234-4897-1		
35	Bearing box	1624157-01	M30	
36	End plate II			
37	Channel plates			
38	End plate I			
39	Lifting eye bolt	34503663-01		
	Ratchet spanner	32220-3101-5	M30	Assembling tool
	Protection sheet		Available for the Plate Heat Exchanger, contact your local Alfa Laval Representative for more information on how to order.	
		3350000635	Sign	For protection sheet

Connections

Connections in frame plate and pressure plate

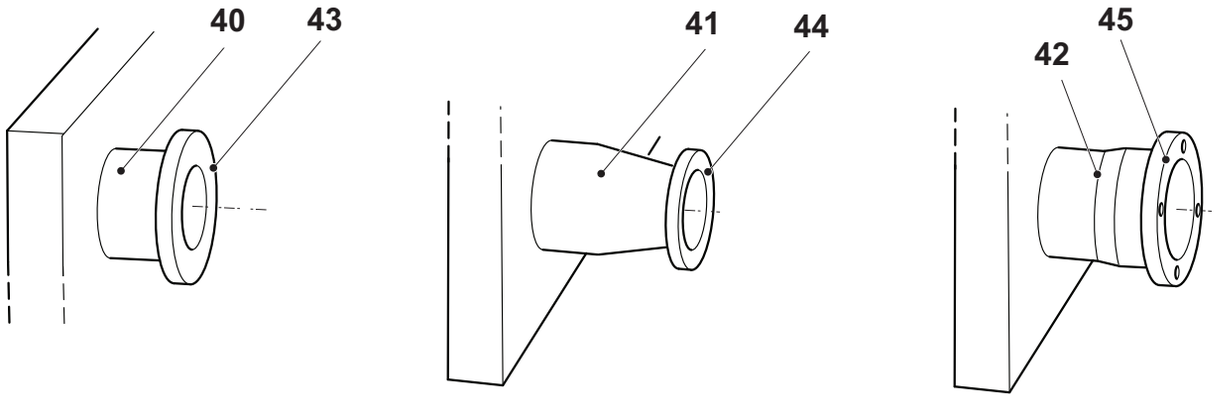

Drawing of connections in frame plate and pressure plate.

Pos	Denomination	AlfaLaval Part No	Specification	Comments
40	Pipe, Ø101	1625369-01		CE
		1625369-02		CE 3-A sanitary std
41	Pipe, Ø76	1625369-03	Reduction Ø101.6 • Ø76.1	CE
		1625369-04	Reduction Ø101.6 • Ø76.1	CE 3-A sanitary std
42	Pipe, DN100	3350018154		CE For frame plate
		3350018155		CE For pressure plate
43	Fitting, Ø101	1644793-06	SMS 101 MALE PART	CE
		1644796-06	DIN 101 MALE PART	CE
		1644799-06	IDF 101 MALE PART	CE
		1644802-06	RJT 101 MALE PART	CE
		1644805-06	CLAMP 101 NIPPLE	CE
44	Fitting, Ø76	1644793-05	SMS 76 MALE PART	CE
		34503161-01	DIN 76 MALE PART, Inside tappered	CE
		1644799-05	IDF 76 MALE PART	CE
		1644802-05	RJT 76 MALE PART	CE
		1644805-05	CLAMP 76 NIPPLE	CE
45	Flange, DN100	3350017922	DIN 11864-2 DN100	CE
		3350018011	FG1 PN10 DN100	CE
		3350018007	FN1 PN10 DN100	CE

Connections in connection plate

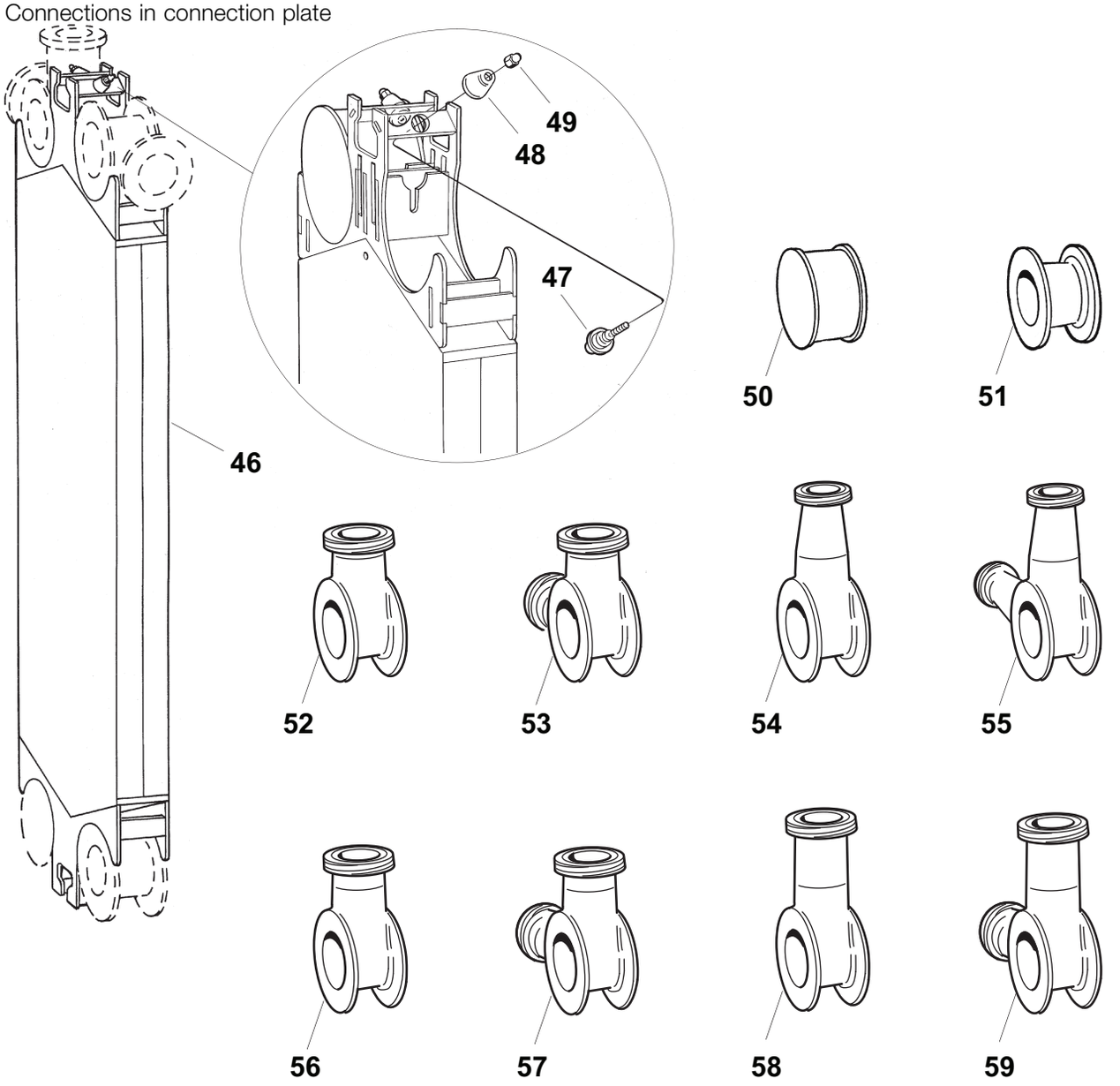

Drawing of connection plate.

Pos	*Denomination*	*AlfaLaval Part No*	*Specification*	*Comments*
46	Connection plate	34503641-01		CE
47	Bolt	1640386-01	Roller screw	
48	Dished washer	1640385-01		
49	Acron nut	1640387-01		
50	Blind corner	1625368-04		CE
51	Through passage	1625371-02		CE
		1625371-03		CE 3-A sanitary std
52	Single corner, Ø101	34503858-01		CE
		34503858-03		CE 3-A sanitary std
53	Double corner, Ø101	34503859-01		CE
		34503859-03		CE 3-A sanitary std
54	Single corner, Ø76	34503858-02		CE
		34503858-04		CE 3-A sanitary std
55	Double corner, Ø76	34503859-02		CE
		34503859-04		CE 3-A sanitary std
56	Single corner, DN100	3350018156		CE
57	Double corner, DN100	3350018157		CE
58	Single corner, DN100	3350018158	Extended	CE
59	Double corner, DN100	3350018159	Extended	CE

	Fitting	Same as for FP and PP, see above.
	Flange	Same as for FP and PP, see above.

Blind connection

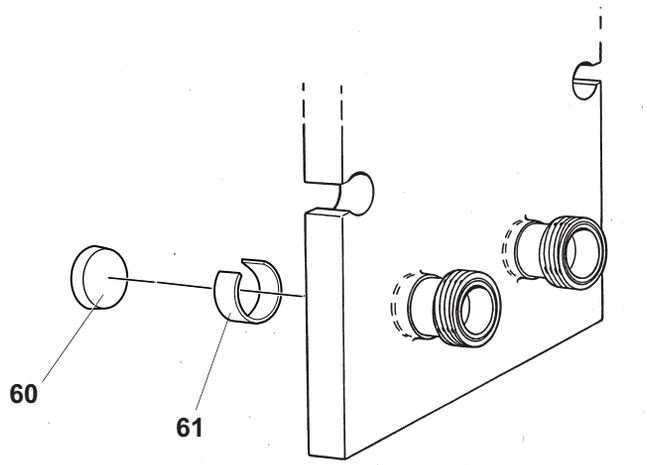

Drawing of blind connection.

Pos	*Denomination*	*AlfaLaval Part No*	*Specification*	*Comments*
60	Blind cover	1625345-02 1625345-01		CE For connection without connection pipe CE For connection with connection pipe
61	Spring	32324-7909-1		CE For connection with connection pipe

Spare Parts Lists M6 -FMC

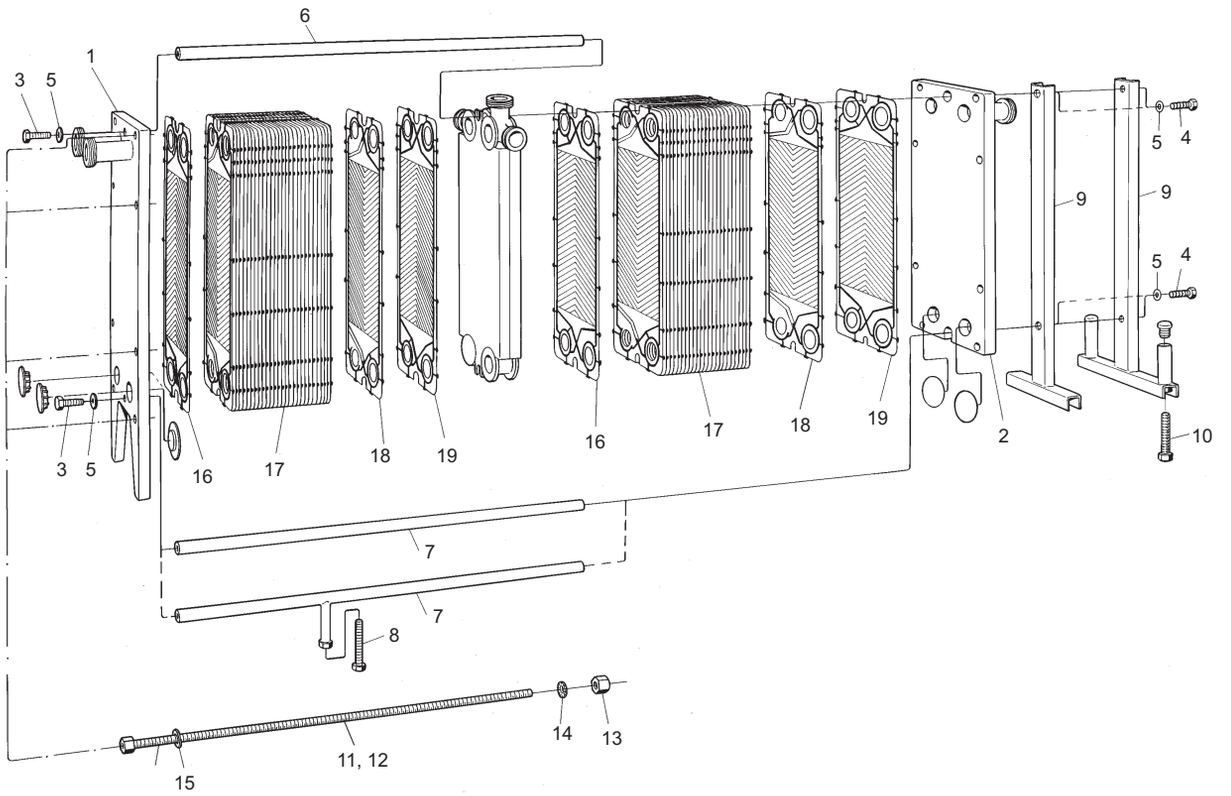

Exploded view of M6-FMC.
4

Frame components

Pos	*Denomination*	*AlfaLaval Part No*	*Specification*	*Comments*
1	Frame plate	32320-4001-1		CE With plain connection holes
		1621692-01		CE With welding ring slots
2	Pressure plate	32320-8202-1		CE With plain connection holes
		1621693-01		CE With welding ring slots
3	Screw	260192-09	ISO 4014 - M20 x 65 - A4-70	
4	Screw	260192-03	ISO 4017 - M20 x 40 - A4-70	
5	Washer	223101-39	BRB 21 x 37 - 2343	
6	Carrying bar	32323-2046-1	L=700	
		32323-2046-2	L=900	
		32323-2046-3	L=1200	
		32323-2046-4	L=1500	
		32323-2046-5	L=1800	
		32323-2046-6	L=SPEC	
7	Guiding bar	32323-2046-1	L=700	
		32323-2046-2	L=900	
		32323-2046-3	L=1200	
		32323-4021-1	L=1500, incl. foot	
		32323-4021-2	L=1800, incl. foot	
		32323-4021-3	L=SPEC, incl. foot	
8	Levelling screw	32323-0195-1	M20*137	For guiding bar with foot
9	Support column	32322-0040-1		
		32322-0039-1	Adjustable	
10	Levelling screw	32323-0195-1	M20*137	For adjustable support column
11	Tightening bolt	1641228-01	M20, L=560	CE
		1641228-02	M20, L=860	CE
		1641228-03	M20, L=1160	CE
		1641228-04	M20, L=1460	CE
		1641228-05	M20, L=1760	CE
		1641228-08	M20, L=SPEC	CE
		32324-1602-1	M20, L=600	CE
		32324-1602-2	M20, L=800	CE
		32324-1602-3	M20, L=1100	CE
		32324-1602-4	M20, L=1400	CE
		32324-1602-5	M20, L=1700	CE
		32324-1602-6	M20, L=SPEC	CE
12	Plastic tube	1995-101-096		For M20 bolt
13	Nut	1641666-01	M20	CE For TB 1641228-0X
		32324-2024-5	M20	CE For TB 32324-1602-X
14	Lock washer	990148-01	AZ 21*33 - 2343	
15	Wearing washer	32324-1403-1	M20	
16	End plate II			
17	Channel plates			
18	End plate I			
19	Transition plate			
	Ratchet spanner	32220-3102-01	M20, NV30	Assembling tool
	Protection sheet		Available for the Plate Heat Exchanger, contact your local Alfa Laval Representative for more information on how to order.	

Connections

Connections in frame plate and pressure plate

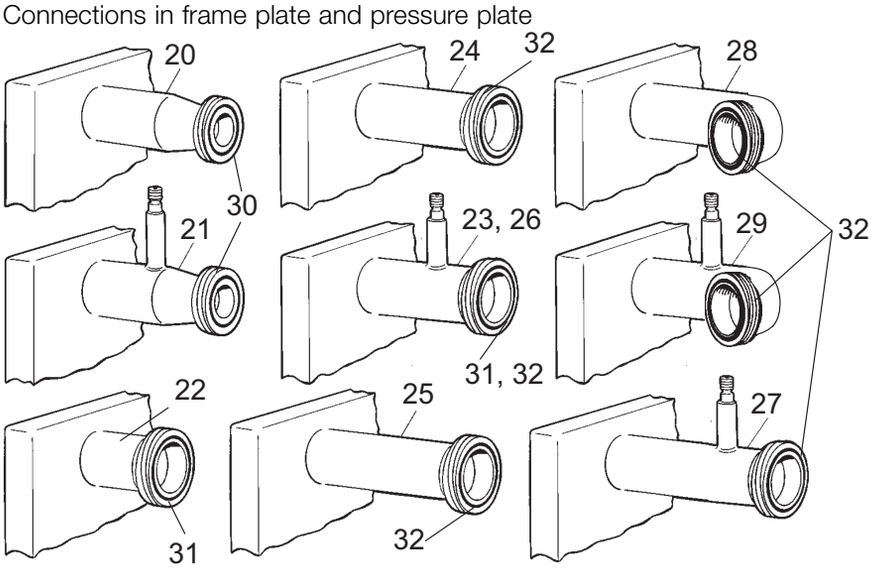

Drawing of connections in frame plate and pressure plate.

Pos	Denomination	AlfaLaval Part No	Specification	Comments
20	Pipe, Ø38	1626021-01	Reduction Ø51 • Ø38	CE
		1626021-02	Reduction Ø51 • Ø38	CE 3-A sanitary std
21	Pipe with dive tube, Ø38	1626021-03	Reduction Ø51 • Ø38	CE
22	Pipe, Ø51	1625416-01		CE
		1625416-02		CE 3-A sanitary std
23	Pipe with dive tube, Ø51	1640149-01		CE
24	Pipe, DN50	1626360-07	Short, position S1 S2	CE For frame plate
		1626360-12	Short, position S1 S2	CE For frame plate, 3-A sanitary std
25	Pipe, DN50	1626360-10	Long, position S3 S4	CE For frame plate
		1626360-13	Long, position S3 S4	CE For frame plate, 3-A sanitary std
26	Pipe with dive tube, DN50	1626360-09	Short, position S1 S2	CE For frame plate
27	Pipe with dive tube, DN50	1626360-11	Long, position S3 S4	CE For frame plate
28	Pipe, DN50	1640150-01		CE For pressure plate
		1640150-04		CE For pressure plate, 3-A sanitary std
29	Pipe with dive tube, DN50	1640150-02	Position T1 T2	CE For pressure plate
		1640150-03	Position T3 T4	CE For pressure plate
30	Fitting, Ø38	1644793-02	SMS 38 MALE PART	CE
		1644796-02	DIN 38 MALE PART	CE
		1644799-02	IDF 38 MALE PART	CE
		1644802-02	RJT 38 MALE PART	CE
		1644805-02	CLAMP 38 NIPPLE	CE
31	Fitting, Ø51	1644793-03	SMS 51 MALE PART	CE
		1644796-03	DIN 51 MALE PART	CE
		1644799-03	IDF 51 MALE PART	CE
		164480203	RJT 51 MALE PART	CE
		1644805-03	CLAMP 51 NIPPLE	CE
32	Flange, DN50	1626363-01	DIN DN50 PN16	
	Welding ring	1625617-01		CE For welding ring slots

Connections in connection plate

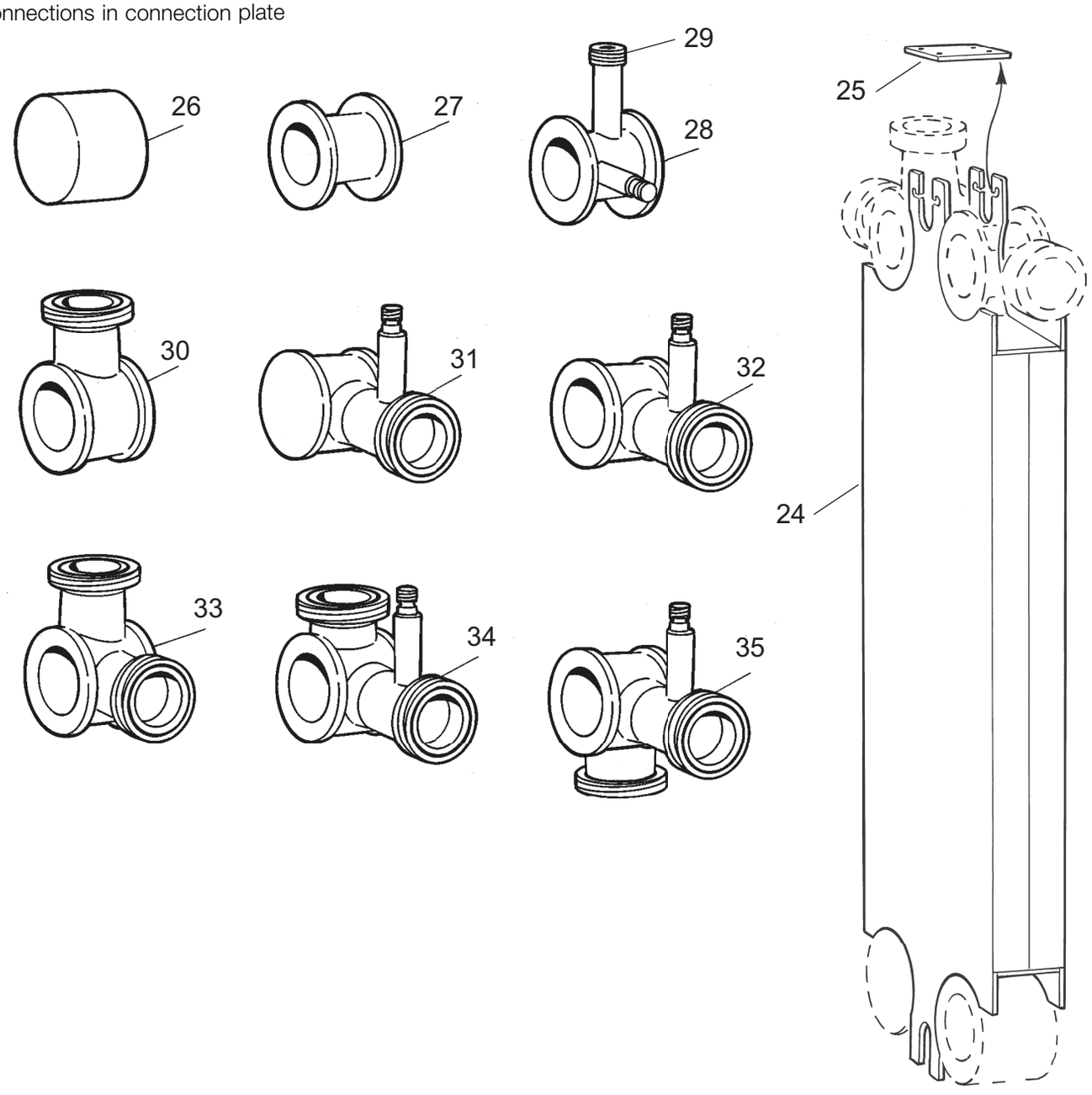

Drawing of connection plate corners.

Pos	Denomination	AlfaLaval Part No	Specification	Comments
33	Connection plate	32321-3200-1		CE
34	Blind corner	32325-5410-1		CE
35	Through passage	1625189-02		CE
		1625189-03		CE 3-A sanitary std
36	Through passage with dive tube and nib	1625233-01		CE
37	Valve	31350-0020-1	R 3/4"	CE
38	Single corner, Ø51	1640177-01		CE
		1640177-02		CE 3-A sanitary std
39	Single corner with dive tube, Ø51	1640177-03	Horizontal position A-1, A-2 if bottom towards frame plate, otherwise A-3, A-4	CE
40	Single corner with dive tube, Ø51	1640177-04	Horizontal position A-3, A-4 if bottom towards frame plate, otherwise A-1, A-2	CE
41	Double corner, Ø51	1640178-01		CE
		1640178-02		CE 3-A sanitary std
42	Double corner with dive tube, Ø51	1640178-03	Position A-1, A-4	CE
43	Double corner with dive tube, Ø51	1640178-04	Position A-2, A-3	CE
44	Single corner, DN50	1626381-01	Horizontal	CE
		1626381-02	Horizontal	CE 3-A sanitary std
45	Single corner with dive tube, DN50	1626381-03	Horizontal position A-1, A-2 if bottom towards frame plate, otherwise A-3, A-4	CE
46	Single corner with dive tube, DN50	1626381-04	Horizontal position A-3, A-4 if bottom towards frame plate, otherwise A-1, A-2	CE
	Fitting, Ø51		Same as for FP and PP, see above.	
	Flange, DN50		Same as for FP and PP, see above.	

Blind connection

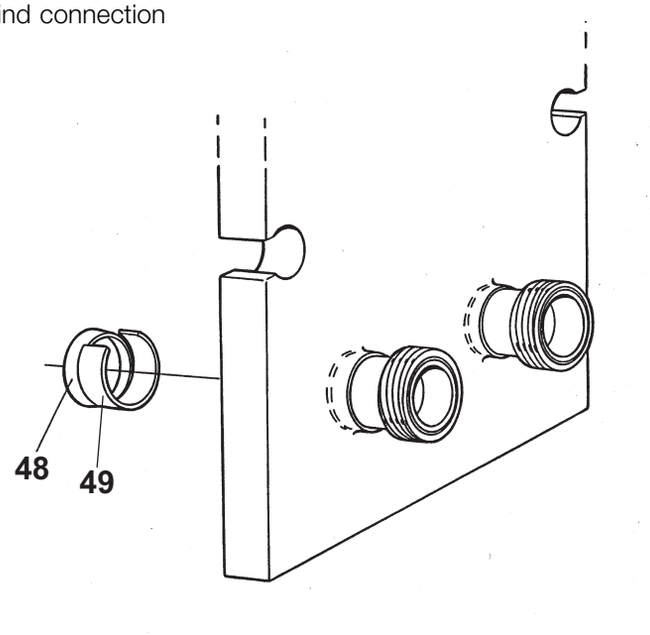

Drawing of blind connection.

Pos	*Denomination*	*AlfaLaval Part No*	*Specification*	*Comments*
47	Blind cover	32324-4507-1		CE For plain connection hole without pipe
		1625618-01		CE For welding ring slot without pipe
		1625418-01		CE For welding ring slot with pipe
48	Spring	1625434-01		CE For welding ring slot with pipe

Spare Parts Lists M6 -FHC

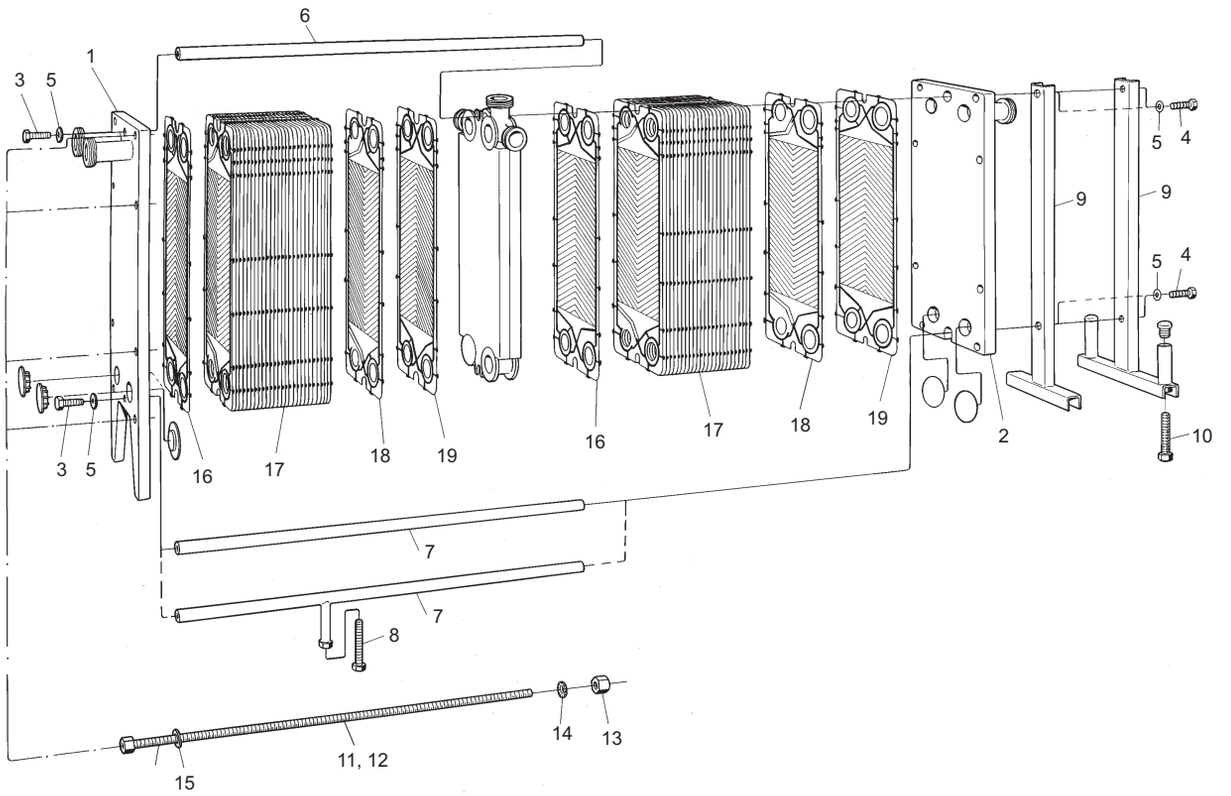

Exploded view of M6-FHC.
5

Frame components

Pos	*Denomination*	*AlfaLaval Part No*	*Specification*	*Comments*
1	Frame plate	32320-4001-1		CE
2	Pressure plate	32320-8202-1		CE
3	Screw	260192-09	ISO 4014 - M20 x 65 - A4-70	
4	Screw	260192-06	ISO 4017 - M20 x 45 - A4-70	
5	Washer	223101-39	BRB 21 x 37 - 2343	
6	Carrying bar	32323-2046-1	L=700	
		32323-2046-2	L=900	
		32323-2046-3	L=1200	
		32323-2046-4	L=1500	
		32323-2046-5	L=1800	
		32323-2046-6	L=SPEC	
7	Guiding bar	32323-2046-1	L=700	
		32323-2046-2	L=900	
		32323-2046-3	L=1200	
		32323-4021-1	L=1500, incl. foot	
		32323-4021-2	L=1800, incl. foot	
		32323-4021-3	L=SPEC, incl. foot	
8	Levelling screw	260192-42	ISO 4017 - M20 x 130 - A4-70	For guiding bar with foot
9	Support column	32322-0040-1		
		32322-0039-1	Adjustable	
10	Levelling screw	32323-0195-1	M20*137	For adjustable support column
11	Tightening bolt	34504023-01	M20, L=560, ASME SA 193 B8M	CE
		34504024-01	M20, L=860, ASME SA 193 B8M	CE
		34504025-01	M20, L=1160, ASME SA 193 B8M	CE
		34504026-01	M20, L=1460, ASME SA 193 B8M	CE
		34504027-01	M20, L=1760, ASME SA 193 B8M	CE
		1641228-01	M20, L=560	CE
		1641228-02	M20, L=860	CE
		1641228-03	M20, L=1160	CE
		1641228-04	M20, L=1460	CE
		1641228-05	M20, L=1760	CE
		1641228-08	M20, L=SPEC	CE
12	Plastic tube	1995-101-096		For M20 bolt
13	Nut	1641666-01	M20	CE
14	Lock washer	990148-01	AZ 21*33 - 2343	
15	Wearing washer	32324-1403-1	M20	
16	End plate II			
17	Channel plates			
18	End plate I			
19	Transition plate			
	Ratchet spanner	32220-3102-01	M20, NV30	Assembling tool
	Protection sheet		Available for the Plate Heat Exchanger, contact your local Alfa Laval Representative for more information on how to order.	

Connections

Connections in frame plate and pressure plate

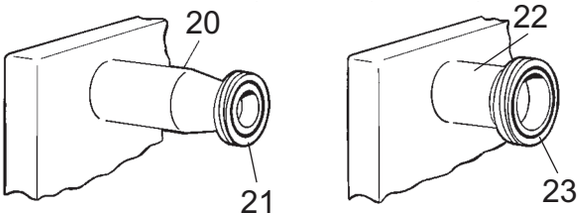

Drawing of connections in frame plate and pressure plate.

Pos	Denomination	AlfaLaval Part No	Specification	Comments
20	Pipe, Ø38	1626021-01	Reduction Ø51 • Ø38	CE
		1626021-02	Reduction Ø51 • Ø38	CE 3-A sanitary std
21	Fitting, Ø38	1644793-02	SMS 38 MALE PART	CE
		1644796-02	DIN 38 MALE PART	CE
		1644799-02	IDF 38 MALE PART	CE
		1644802-02	RJT 38 MALE PART	CE
		1644805-02	CLAMP 38 NIPPLE	CE
22	Pipe, Ø51	1625416-01		CE
		1625416-02		CE 3-A sanitary std
23	Fitting, Ø51	1644793-03	SMS 51 MALE PART	CE
		1644796-03	DIN 51 MALE PART	CE
		1644799-03	IDF 51 MALE PART	CE
		164480203	RJT 51 MALE PART	CE
		1644805-03	CLAMP 51 NIPPLE	CE

Connections in connection plate

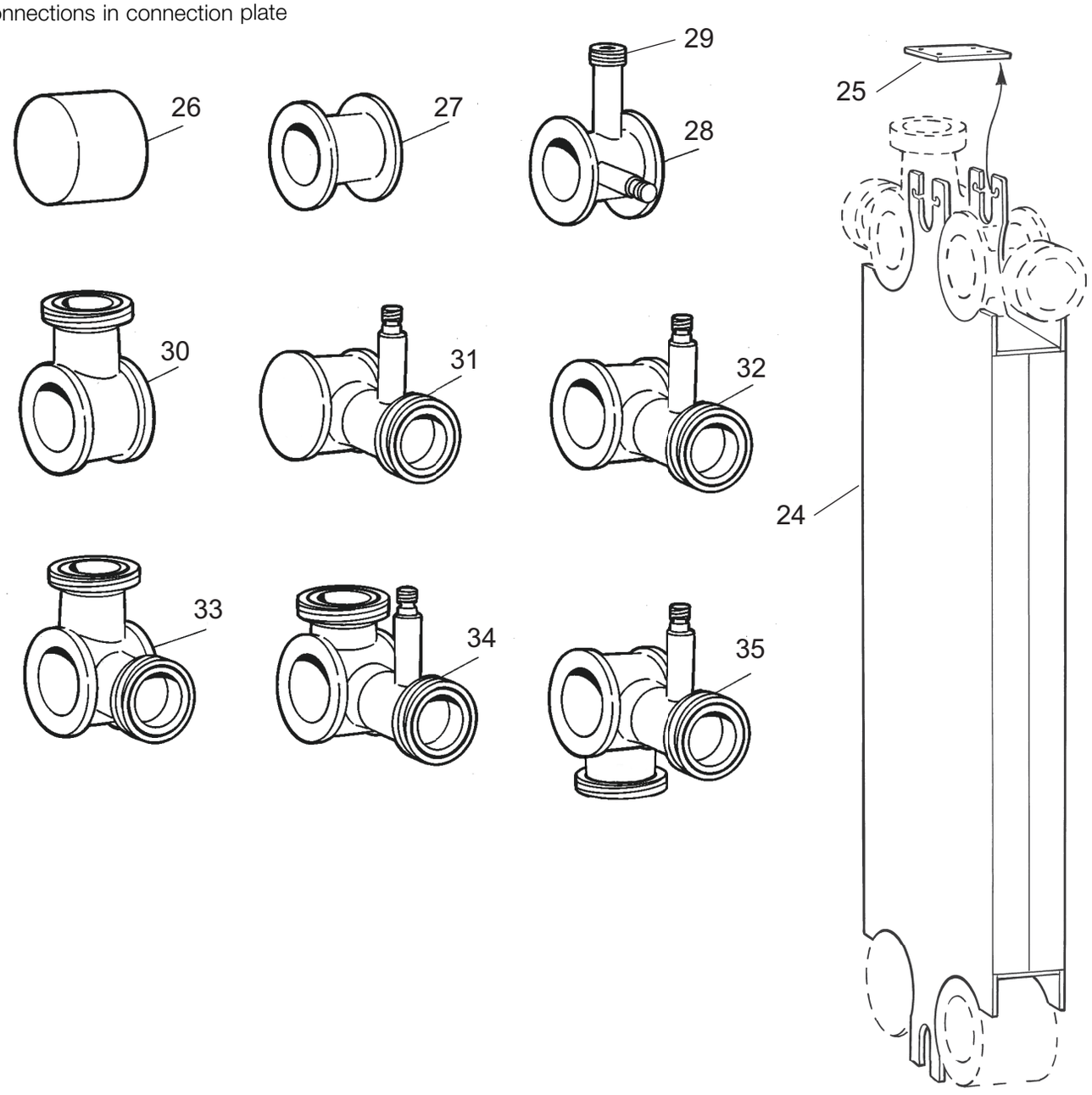

Drawing of connection plate corners.

Pos	Denomination	AlfaLaval Part No	Specification	Comments
24	Connection plate	1642699-01		CE
25	Holder	1642698-01		
26	Blind corner	32325-5410-1		CE
27	Through passage	1625189-02		CE
		1625189-03		CE 3-A sanitary std
28	Through passage with dive tube and nib	1625233-01		CE
29	Valve	31350-0020-1	R 3/4"	CE
30	Single corner, Ø51	1640177-01		CE
		1640177-02		CE 3-A sanitary std
31	Single corner with dive tube, Ø51	1640177-03	Horizontal position A-1, A-2 if bottom towards frame plate, otherwise A-3, A-4	CE
32	Single corner with dive tube, Ø51	1640177-04	Horizontal position A-3, A-4 if bottom towards frame plate, otherwise A-1, A-2	CE
33	Double corner, Ø51	1640178-01		CE
		1640178-02		CE 3-A sanitary std
34	Double corner with dive tube, Ø51	1640178-03	Position A-1, A-4	CE
35	Double corner with dive tube, Ø51	1640178-04	Position A-2, A-3	CE
	Fitting, Ø51		Same as for FP and PP, see above.	

Blind connection

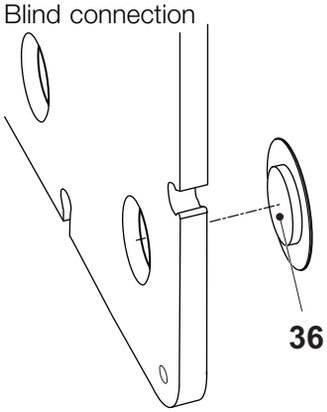

Drawing of blind connection.

Pos	*Denomination*	*AlfaLaval Part No*	*Specification*	*Comments*
36	Blind cover	32324-4507-1		CE

Spare Parts Lists M10 -FHC

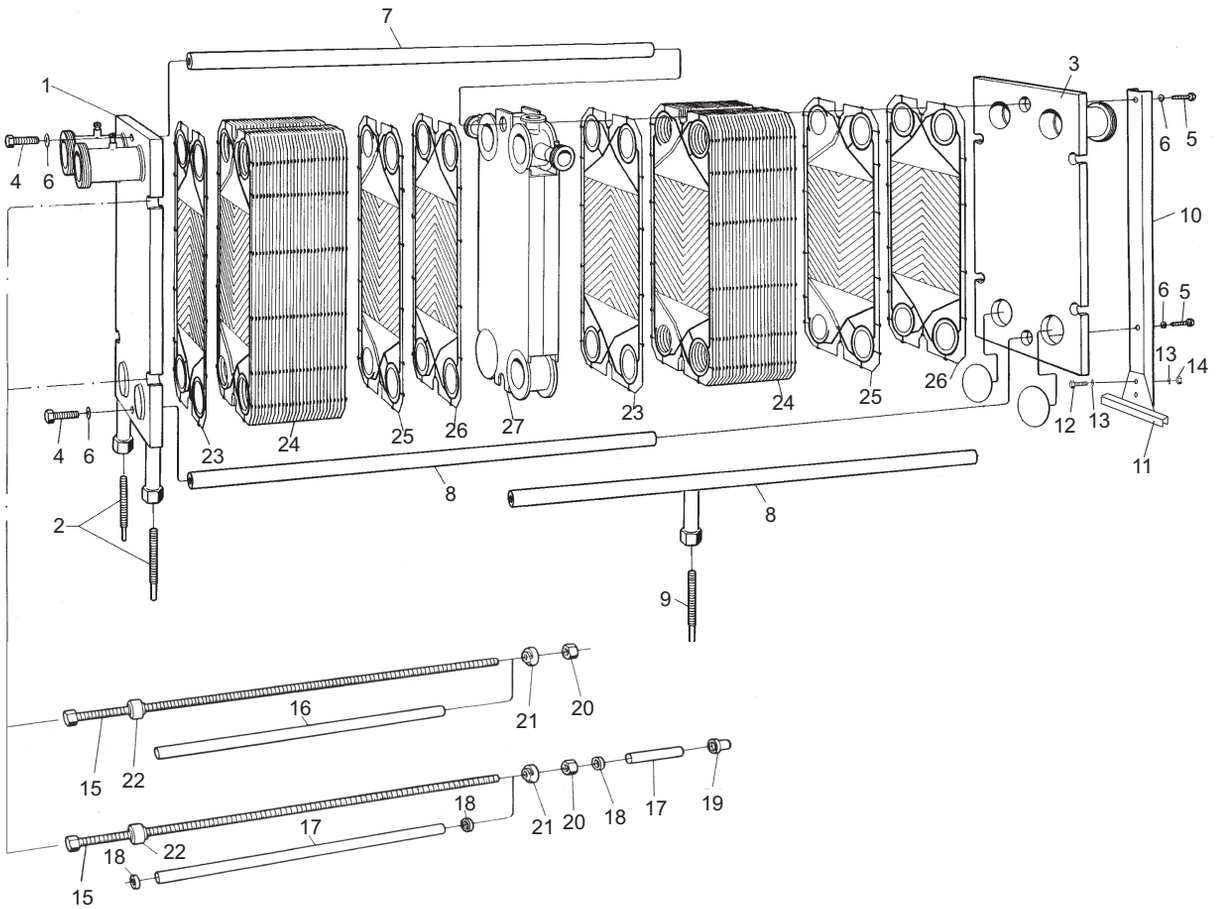

Exploded view of M10-FHC.
4

Frame components

Pos	Denomination	AlfaLaval Part No	Specification	Comments
1	Frame plate	32320-4305-8		CE
2	Levelling screw	32323-0175-1	M30, L=165	
3	Pressure plate	32320-8813-8		CE
4	Screw	260192-09	ISO 4014 - M20 x 65 - A4-70	
5	Screw	260192-03	ISO 4017 - M20 x 40 - A4-70	
6	Washer	223101-39	BRB 21 x 37 - 2343	
7	Carrying bar	32323-2008-1	L=650	
		32323-2008-2	L=900	
		32323-2008-3	L=1250	
		32323-2008-4	L=1600	
		32323-2008-5	L=2100	
		32323-2008-9	L=2400	
		32323-2008-7	L=3000	
		32323-2008-6	L=SPEC	
8	Guiding bar	32323-2008-1	L=650	
		32323-2008-2	L=900	
		32323-2008-3	L=1250	
		32323-2008-4	L=1600	
		32323-2008-5	L=2100	
		32323-2008-6	L=SPEC, max. 2100	
		32323-4019-5	L=2400, incl. Foot	
		32323-4019-3	L=3000, incl. Foot	
		32323-4019-1	L=SPEC, incl. Foot	
9	Levelling screw	32323-0175-1	M30, L=165	For guiding bar with foot
10	Supporting column	32322-0032-1		
11	Foot	32322-0143-1		For LC>2100
12	Screw	2210463-03	ISO 4017 - M16 x 40 - A4-70	
13	Washer	223101-37	BRB 17 x 30 - 2343	
14	Nut	221803-40	ISO 4032 - M16 - A4-70	
15	Tightening bolt	1624463-01	M30, L=490	CE
		1624463-02	M30, L=860	CE
		1624463-03	M30, L=1160	CE
		1624463-04	M30, L=1460	CE
		1624463-06	M30, L=2060	CE
		1624463-07	M30, L=2360	CE
		1624463-08	M30, L=2960	CE
		1624463-09	M30, L=3560	CE
		1624463-10	M30, L=L1	CE
16	Plastic tube	1995-101-082	ID=32	
17	Protecting tube	32234-4863-1		
18	Guiding ring	32324-2835-1		
19	Cap	32234-4864-1		
20	Nut	1641668-01	M30, L=70	CE
21	Lock washer	32234-4897-1	M30	
22	Guide washer	32324-2900-2		
23	Wearing washer	32239-1145-1		
24	End plate II			
25	Channel plates			
26	End plate I			
27	Transition plate			
	Ratchet spanner	32220-3101-5	M30, NV46	Assembling tool
	Protecting sheet		Available for the Plate Heat Exchanger, contact your local Alfa Laval Representative for more information on how to order.	

Connections

Connections in frame plate and pressure plate

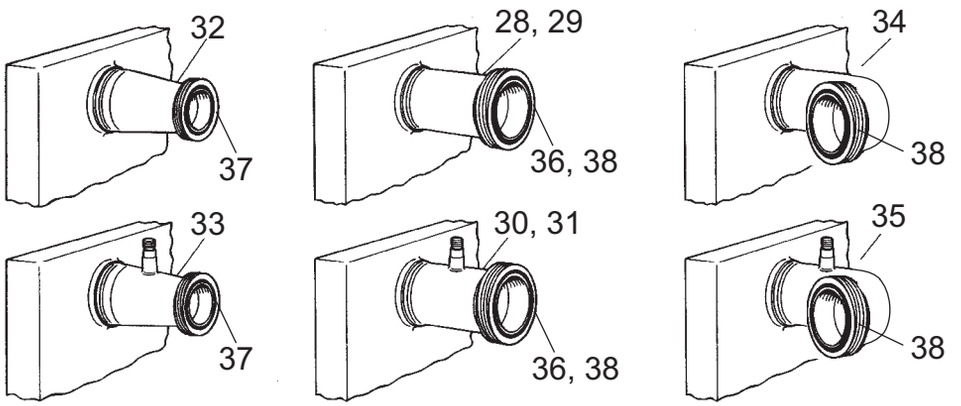

Drawing of connections in frame plate and pressure plate.

Pos	Denomination	AlfaLaval Part No	Specification	Comments
28	Pipe, Ø101	1625369-01		CE
		1625369-02		CE 3-A sanitary std
29	Pipe, DN100	1626362-02		CE For frame plate
		1626362-04		CE For frame plate, 3-A sanitary std
30	Pipe with dive tube, Ø101	1640033-01		CE
31	Pipe with dive tube, DN100	1626362-10		CE For frame plate
32	Pipe, Ø76	1625369-03	Reduction Ø101.6 • Ø76.1	CE
		1625369-04	Reduction Ø101.6 • Ø76.1	CE 3-A sanitary std
33	Pipe with dive tube, Ø76	1640033-03	Reduction Ø101.6 • Ø76.1	CE
34	Pipe, DN100	1640180-01		CE For pressure plate
		1640180-04		CE For pressure plate, 3-A sanitary std
35	Pipe with dive tube, DN100	1640180-02		CE For pressure plate, T1 T2
		1640180-03		CE For pressure plate, T3 T4
36	Fitting, Ø101	1644793-06	SMS 101 MALE PART	CE
		1644796-06	DIN 101 MALE PART	CE
		1644799-06	IDF 101 MALE PART	CE
		1644802-06	RJT 101 MALE PART	CE
		1644805-06	CLAMP 101 NIPPLE	CE
37	Fitting, Ø76	1644793-05	SMS 76 MALE PART	CE
		34503161-01	DIN 76 MALE PART, Inside tappered	CE
		1644799-05	IDF 76 MALE PART	CE
		1644802-05	RJT 76 MALE PART	CE
		1644805-05	CLAMP 76 NIPPLE	CE
38	Flange, DN100	1626363-03	DIN 2633	CE

Connections in connection plate

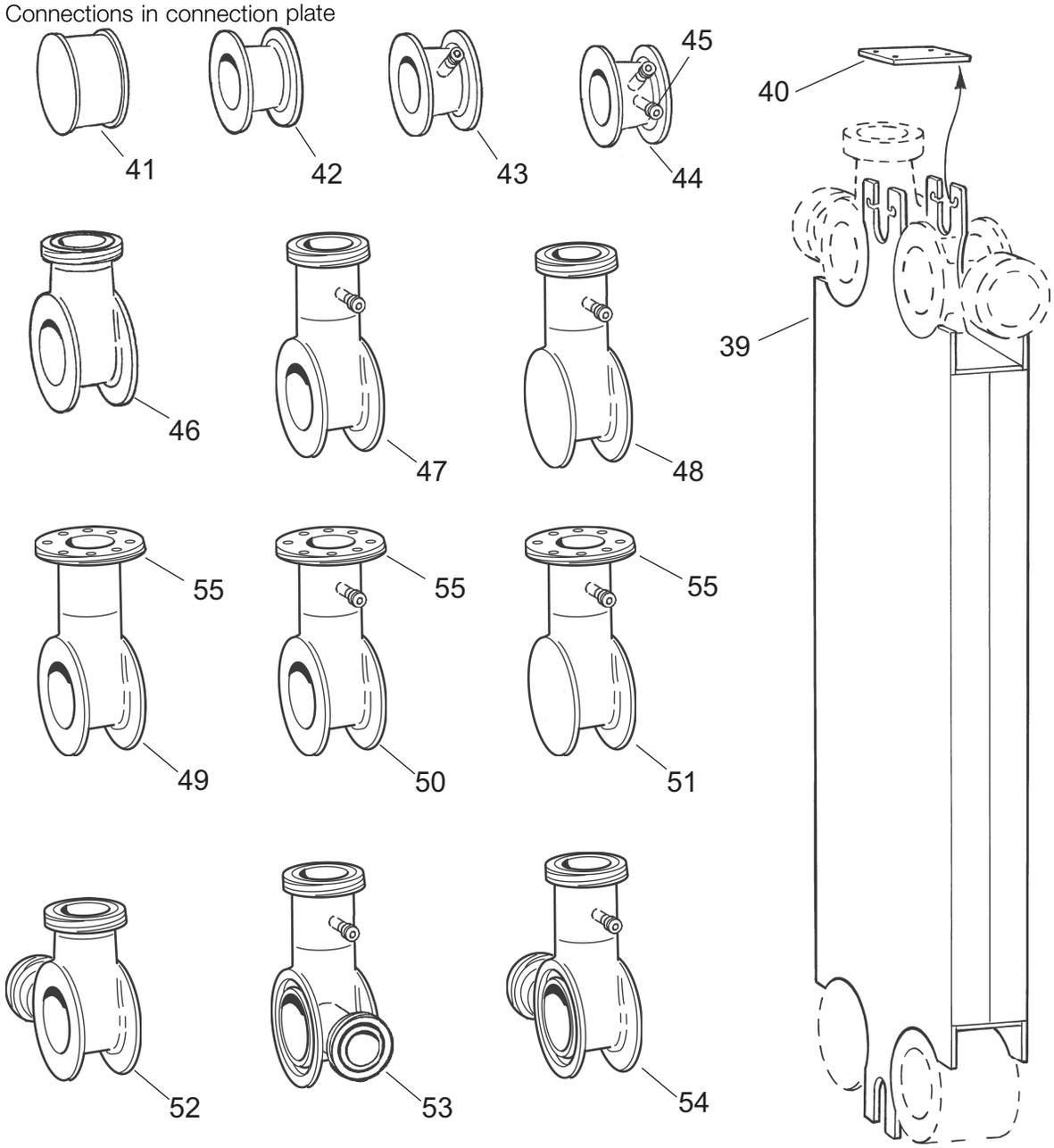

Drawing of connection plate corners.

Pos	Denomination	AlfaLaval Part No	Specification	Comments
39	Connection plate	1642684-01		CE
40	Holder	1642683-01		
41	Blind corner	34500100-01		CE
42	Through passage	34500073-01		CE
		34500073-02		CE 3-A sanitary std
43	Through passage with dive tube	34500099-01		CE
44	Through passage with dive tube and nib	34500099-02		CE
45	Valve	31350-0020-1	R 3/4"	CE
46	Single corner, Ø76	1640186-01		CE
47	Single corner with dive tube, Ø76	1640186-03	Horizontal position A-1, A-2 if bottom towards frame plate, otherwise A-3, A-4	CE
48	Single corner with dive tube, Ø76	1640186-04	Horizontal position A-3, A-4 if bottom towards frame plate, otherwise A-1, A-2	CE
49	Single corner, DN80	1626379-01	Horizontal	CE
		1626379-02	Horizontal	CE 3-A sanitary std
50	Single corner with dive tube, DN80	1626379-03	Horizontal position A-1, A-2 if bottom towards frame plate, otherwise A-3, A-4	CE
51	Single corner with dive tube, DN80	1626379-04	Horizontal position A-3, A-4 if bottom towards frame plate, otherwise A-1, A-2	CE
52	Double corner, Ø76	1640187-01		CE
		1640187-02		CE 3-A sanitary std
53	Double corner with dive tube, Ø76	1640187-03	Position A-1, A-4	CE
54	Double corner with dive tube, Ø76	1640187-04	Position A-2, A-3	CE
55	Flange, DN80	1626363-02	DIN 2633	CE
	Fitting, Ø76		Same as for FP and PP, see above.	

Blind connection

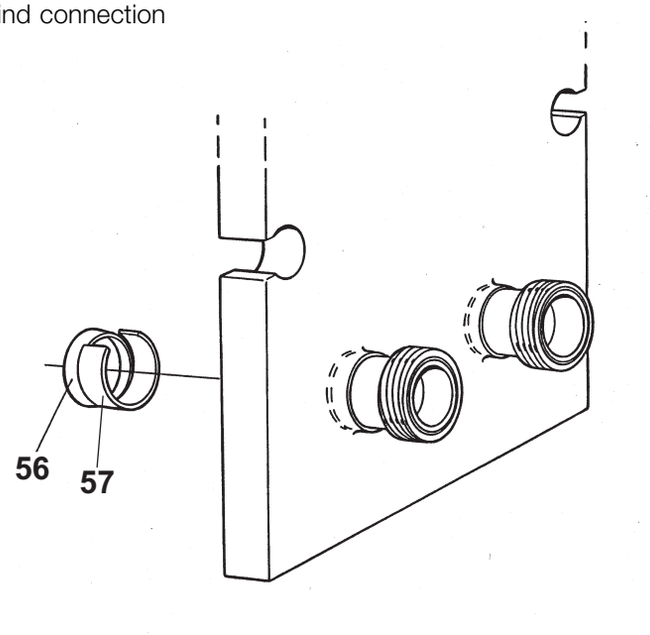

Drawing of blind connection.

Pos	*Denomination*	*AlfaLaval Part No*	*Specification*	*Comments*
56	Blind cover	32324-3706-5 32324-3706-6	D=102 D=98	CE For connection without connection pipe CE For connection with connection pipe
57	Spring	32324-7909-1		CE

Spare Parts Lists TS6 -FMC

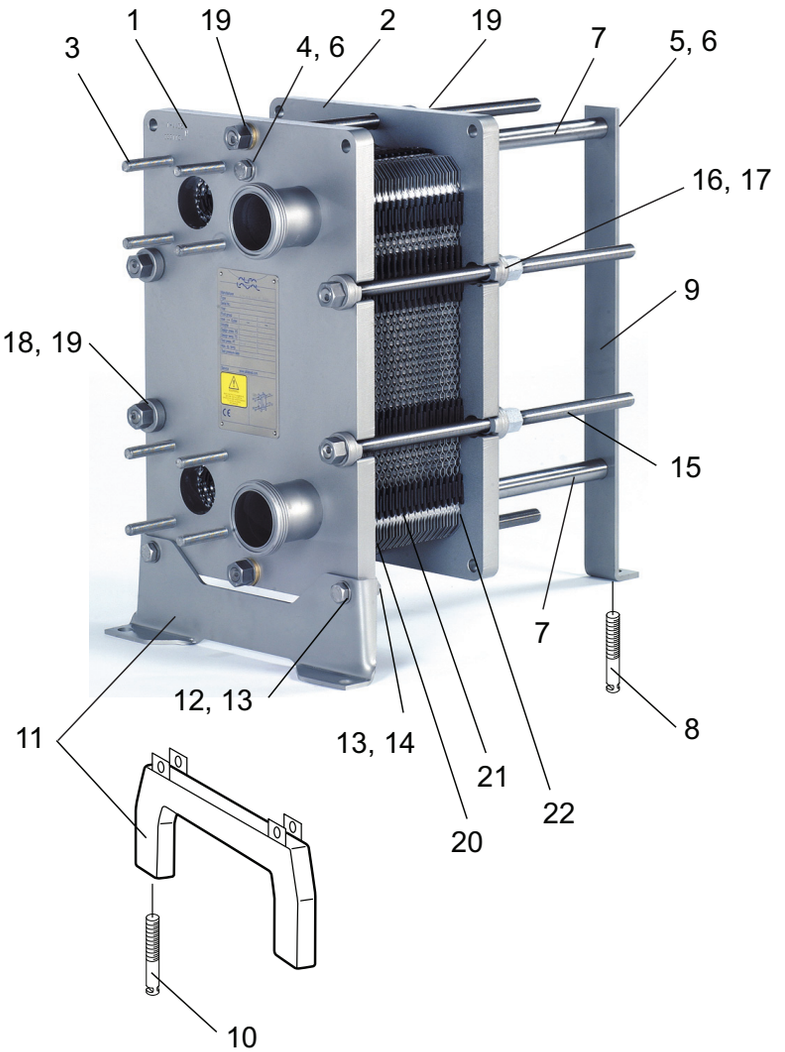

View from frame plate side of TS6-FMC.
6

Frame components

Pos	Denomination	AlfaLaval Part No	Specification	Comments
1	Frame plate	34500832-01	4-holed, EN 1092-1 DN65 PN16	CE
		34500832-17	4-holed, ASME B16.5 Class 150 NPS 2.5	CE
		34500832-29	4-holed, ASME B16.5 Class 150 NPS 3	CE
		34501542-01	4-holed, ASME B16.5 Class 150 NPS 2.5	ASME
		34501542-17	4-holed, ASME B16.5 Class 150 NPS 3	ASME
2	Pressure plate	34500833-16	0-holed	CE
		34500833-14	1-holed T4, EN 1092-1 DN65 PN16	CE
		34500833-27	1-holed T4, ASME B16.5 Class 150 NPS 2.5	CE
		34500833-39	1-holed T4, ASME B16.5 Class 150 NPS 3	CE
		34501543-16	0-holed	ASME
3	Stud bolt	990166-09	M16, L=80, A2-70	CE Valid for EN 1092-1 DN65
		1644215-01	5/8"-11 UNC, L=89, A2-70	CE Valid for ASME B16.5 Class 150
		34501556-02	5/8"-11 UNC, L=90	ASME Valid for ASME B16.5 Class 150
4	Screw	2210463-07	ISO 4014 - M16 x 60 - A4-70	
5	Screw	2210463-03	ISO 4017 - M16 x 40 - A4-70	
		2210463-39	ISO 4017 - M16 x 80 - A4-70	Valid for 3-A sanitary std
6	Washer	223101-37	BRB 17 x 30 - 2343	
7	Carrying/guiding bar	34501033-01	L=430	
		34501033-02	L=630	
		34501033-03	L=930	
		34501033-04	L=1230	
		34501033-05	L=1430	
8	Levelling screw	1642691-02	L=185, M20	Valid in combination with low or high FP foot
9	Support column	34500994-01		Valid in combination with fixed FP foot
		34501065-01		Valid in combination with low FP foot
		34501065-02		Valid in combination with high FP foot
		3350029690		Valid in combination with low FP foot, 3-A sanitary std
		3350029688		Valid in combination with high FP foot, 3-A sanitary std
10	Levelling screw	1640848-01	L=200, M30	For low foot
		1640848-02	L=250, M30	For high foot
11	Foot	1627509-01	Fixed	
		1642631-02	Low, adjustable	Valid for CE
		1642632-02	High, adjustable	Valid for CE
12	Screw	2210463-07	ISO 4014 - M16 x 60 - A4-70	
13	Washer	223101-37	BRB 17 x 30 - 2343	
14	Nut	221803-40	ISO 4032 - M16 - A4-70	
15	Tightening bolt	1641228-09	M20, L=360	CE
		1641228-01	M20, L=560	CE
		1641228-02	M20, L=860	CE
		1641228-03	M20, L=1160	CE
		1641228-04	M20, L=1460	CE
		34501535-01	M20, L=360	ASME
		34501535-02	M20, L=560	ASME
		34501535-03	M20, L=860	ASME
		34501535-04	M20, L=1160	ASME
		34501535-05	M20, L=1460	ASME
16	Nut	1641666-01	M20	CE
		34501538-01	M20	ASME
17	Lock washer	1641230-01	M20	
18	Guide washer	1642588-01	M20	
19	Wearing washer	223101-39	BRB 21 x 37 - 2343	
20	End plate II			
21	Channel plates			
22	End plate I			
	Ratchet spanner	32220-3102-01	M20, NV30	Assembling tool
	Protecting sheet		Available for the Plate Heat Exchanger, contact your local Alfa Laval Representative for more information on how to order.	

Connections

Connections in frame plate and pressure plate

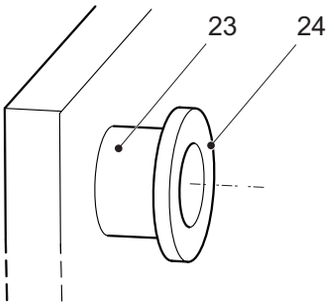

Drawing of connections in frame plate and pressure plate.

Pos	*Denomination*	*AlfaLaval Part No*	*Specification*	*Comments*
23	Pipe, Ø76	32324-7483-1		CE
		34501539-01		ASME
24	Fitting, Ø76	1644793-05	SMS 76 MALE PART	CE
		34503161-01	DIN 76 NW80 MALE PART, Inside tappered	CE
		1644799-05	IDF 76 MALE PART	CE
		1644802-05	RJT 76 MALE PART	CE
		1644805-05	CLAMP 76 NIPPLE	CE
		34501540-05	CLAMP 76 NIPPLE	ASME

Not manufactured anymore

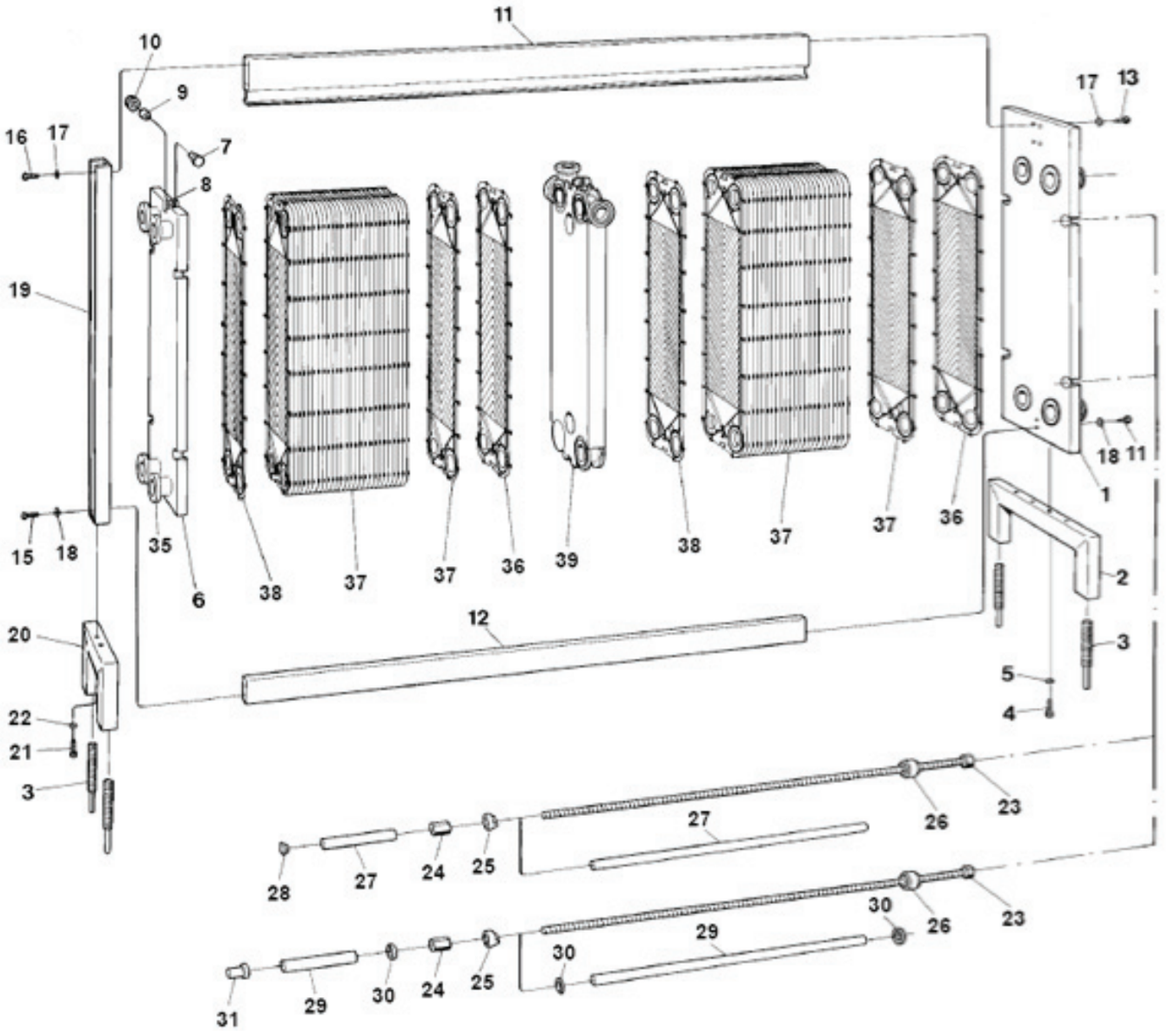

Pos. no.	Part number	Name	Comments
1	162118701	Frame plate	-RM
	162122801	Frame plate	-RH
2	162723501	Foot	
3	162724201	Levelling screw	L=275
4	221046301	Screw	M6S 16x25 - 2343
5	22310137	Washer	BRB 17x30 - 2343
6	162118801	Pressure plate	-RM
	162122901	Pressure plate	-RH
7	162078001	Shaft	
8	162078101	Wheel	
9	26008004	Stop screw	SK6SS 6x8 - 2343
10	52840203	Needle bearing	NKI 20/16 INA

Pos. no. 11 Carrying bar	Pos. no. 12 Guiding bar	Length (mm)	* Max. no. of plates	
			0.5 mm	0.6 mm
162326101	162326301	900	102	100
162326102	162326302	1200	150	147
162326103	162326303	1500	197	194
162326104	162326304	1800	244	240
162326105	162326305	2400	324	319

Pos. no.	Part number	Name	Comments
13	22104609	Screw	M6S 12x60 A4-70
14	22104108	Screw	M6S 10x60 A4-70
15	22104101	Screw	M6S 10x30 - 2343
16	22104602	Screw	M6S 12x25 - 2343
17	22310135	Washer	BRB 13x24 - 2343
18	22310161	Washer	BRB 10.5x22 - 2343
19	162723901	Supporting column	
20	162723601	Foot	
21	22104602	Screw	M6S 12x25 - 2343
22	22310135	Washer	BRB 13x24 - 2343

Pos. no. 23 Tightening bolt M30 (NW46)	Length (mm)	* Max. no. of plates	
		0.5 mm	0.6 mm
3232411072	750	88	87
3232411073	1050	135	133
3232411074	1350	183	180
3232411075	1650	230	226
3232411077	2250	324	319

Pos. no.	Part number	Name	Comments
24	3232420243	Nut	-RM, M30, W.Nr 2.0360 F34
	3232420247	Nut	-RH, M30, W.Nr 2.0360 F34
25	3223448971	Lock washer	
26	162415701	Bearing box	
27	1995101092	Plastic tube	
28	99015201	Plug	
29	1535158030	Protecting tube	
30	3232428351	Guide ring for protecting tube	
31	3223448641	Protective cover	
		Blind connection	
35		Connection	
36		End plate I	
37		Channel plates	
38		End plate II	
39		Connection plate	

* When connection plates: Reduce max. number of plates with 10 plates / connection plate.

Table 1. Blind connection

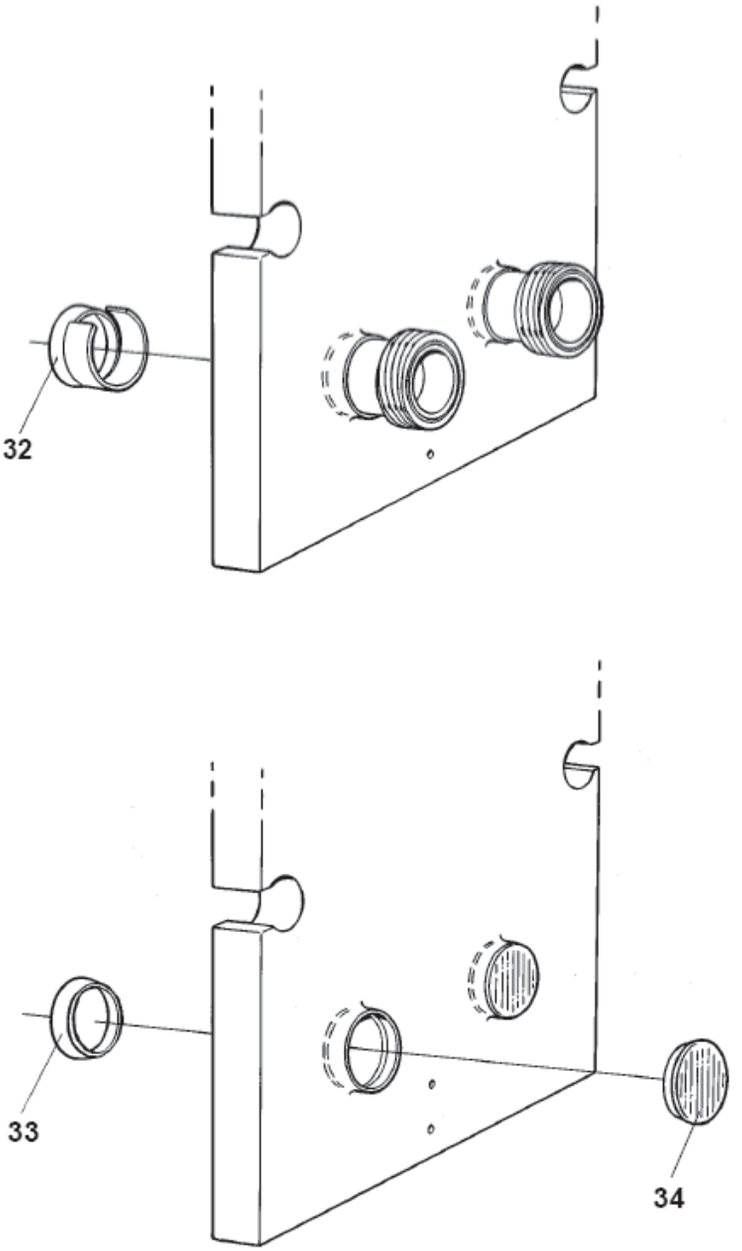

Pos. no.	Part number	Name
32	162543301	Blind washer
33	162561801	Blind washer
34	99015101	Seal plug

Table 2. Connection plate

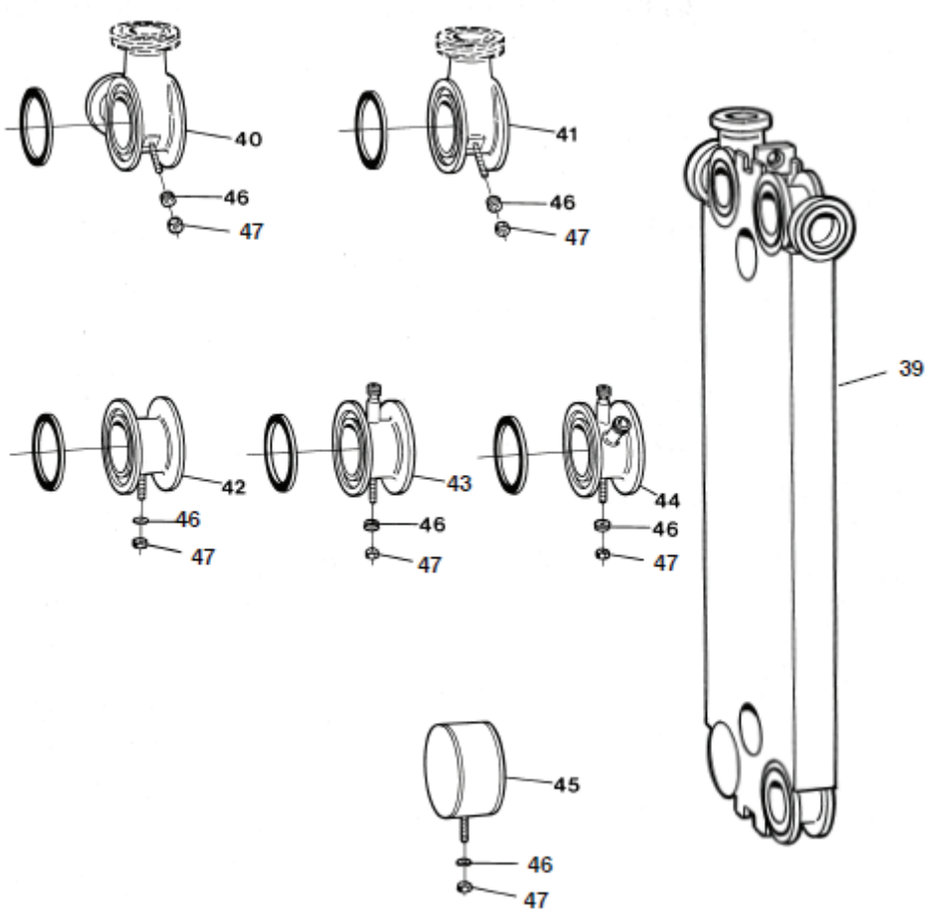

When connection plates: Reduce max. number of plates with 10 plates/connection plate.

Pos no.	Part number	Denomination	Comment
39	162076701	Connection plate	
40	162544101	Double corner	
40	162543901	Double corner	3-A Sanitary standard
41	162543801	Single corner	Horizontal position A-2, A-4 if bottom towards frame plate, otherwise A-1, A-3 Vertical position A-1, A-3 if bottom towards frame plate, otherwise A-2, A-4
41	162543802	Single corner	Horizontal position A-1, A-3 if bottom towards frame plate, otherwise A-2, A-4 Vertical position A-2, A-4 if bottom towards frame plate, otherwise A-1, A-3
41	162544001	Single corner	3-A Sanitary standard Horizontal position A-2, A-4 if bottom towards frame plate, otherwise A-1, A-3 Vertical position A-1, A-3 if bottom towards frame plate, otherwise A-2, A-4
41	162544002	Single corner	3-A Sanitary standard Horizontal position A-1, A-3 if bottom towards frame plate, otherwise A-2, A-4 Vertical position A-2, A-4 if bottom towards frame plate, otherwise A-1, A-3
42	162543501	Through passage	
42	162543502	Through passage	3-A Sanitary standard
42	162543501	Through passage	With 2" connection, 3-A Sanitary standard
43	162543701	Through passage	With drive tube
44	162543601	Through passage	With drive tube and nib, position A-1
44	162543602	Through passage	With drive tube and nib, position A-4
45	162541701	Blind corner	
46	22310161	Washer	BRB 10.5x22
47	22180329	Nut	M6M 10

Note!

Nipples not included for single and double corner.

Table 3. GASKETS - Clip 6-L/H/WS

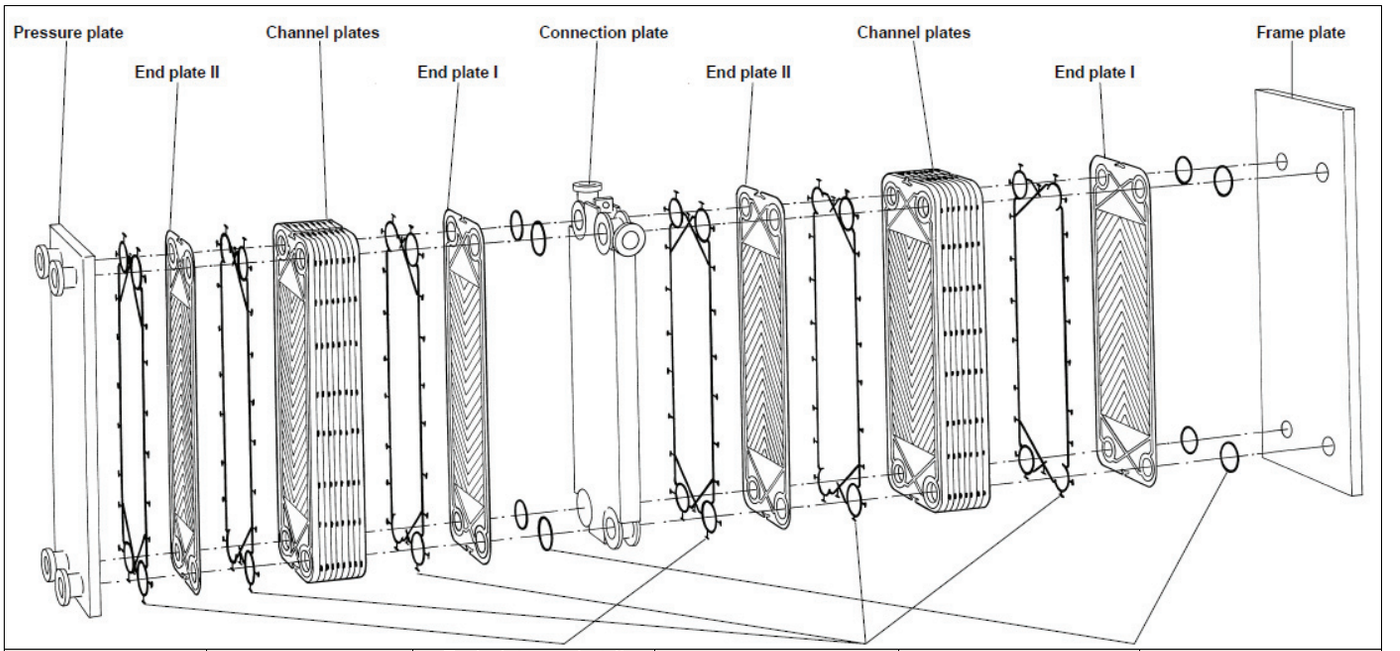

Gasket Qualities	Gasket type	End plate gasket II (or 2 pieces of Channel plate gasket)	Channel plate gasket End plate gasket I	Connection gasket	Colour marking
		Part numbers			
NBRP (Nitrile)	Clip-On	3233024096	3233024046	162923401	1 blue
EPDMF (FDA)	Clip-On	3233024078	3233024028	162923402	2 grey
NBRHTF (FDA)	Clip-On		3233024027	162923403	3 blue

Not manufactured anymore

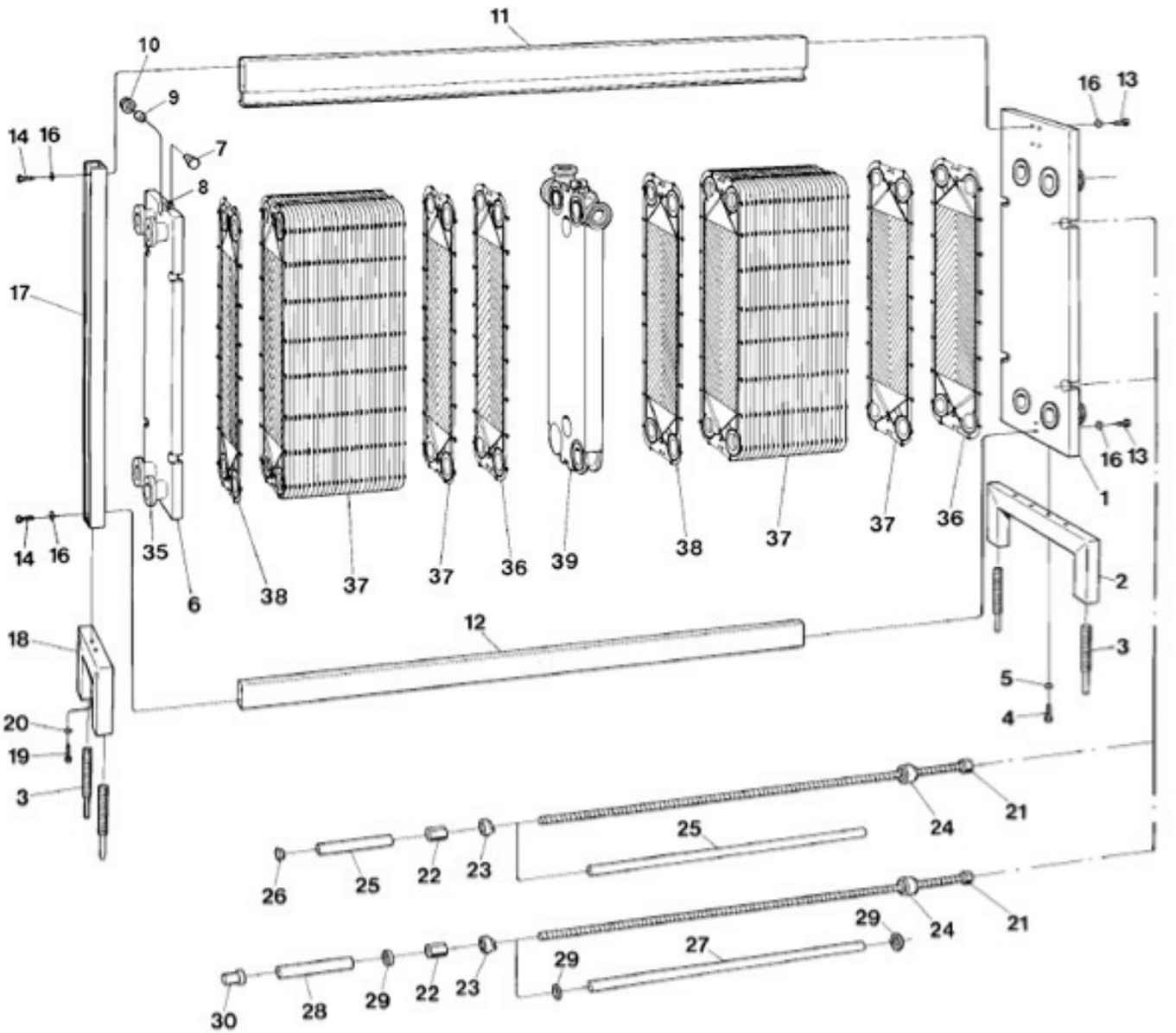

Pos. no.	Part number	Name	Comments
1	162056801	Frame plate	-RM
	162061901	Frame plate	-RH
2	162716901	Foot	
3	3232301661	Levelling screw	
4	221046303	Screw	M6S 16x40
5	22310137	Washer	BRB 17x30
6	162057001	Pressure plate	-RM
	162062501	Pressure plate	-RH
7	162078001	Shaft	
8	26008004	Stop screw	SK6SS 6x8
9	52840203	Needle bearing	NKI 20/16 INA
10	162078101	Wheel	

Pos. no. 11 Carrying bar	Pos. no. 12 Guiding bar	Length (mm)	* Max. no. of plates	
			0.5 mm	0.6 mm
162315001	3232340012	1200	142	140
162315002	3232340014	1800	236	233
162315003	3232340016	2400	331	326
162315004	3232340018	3000	425	419
162315005	3232340021	3600	440	440

Pos. no.	Part number	Name	Comments
13	22104605	Screw	M6S 12x100
14	22104606	Screw	M6S 12x40
16	22310135	Washer	BRB 13x24
17	162717201	Supporting column	
18	162717402	Foot	
19	221046303	Screw	M6S 16x40
20	22310137	Washer	BRB 17x30

21 Tightening bolt		Length (mm)	* Max. no. of plates	
-RM M30 (NW46)	-RH M39 (NW60)		0.5 mm	0.6 mm
3232411073	3232400091	1050	124	122
3232411075	3232400092	1650	219	215
3232411077	3232400093	2250	313	309
3232411079	3232400094	2850	408	402
3232411081	3232400095	3450	440	440

Pos. no.	Part number	Name	Comments
22	3232420243	Nut	-RM
	3232420242	Nut	-RH
23	3223448971	Lock washer	-RM
	3232429151	Lock washer	-RH
24	162415701	Bearing house	-RM
	162416101	Bearing house	-RH
25	1995101092	Plastic tube	-RM
	1995101093	Plastic tube	-RH
26	99015201	Plug	-RM
	99015202	Plug	-RH
27	3232428321	Protecting tube, stainless steel	-RM
28	3223448631	Protecting tube, stainless steel	-RM
	1535158030	Protecting tube	-RH
29	3232428351	Guide ring for protecting tube	
30	3223448641	Protective cover	
Blind connection			
35		Connection	
36		End plate I	
37		Channel plates	
38		End plate II	
39		Connection plate	

* When connection plates: Reduce max. number of plates with 13 plates / connection plate.

Table 4. Blind connection

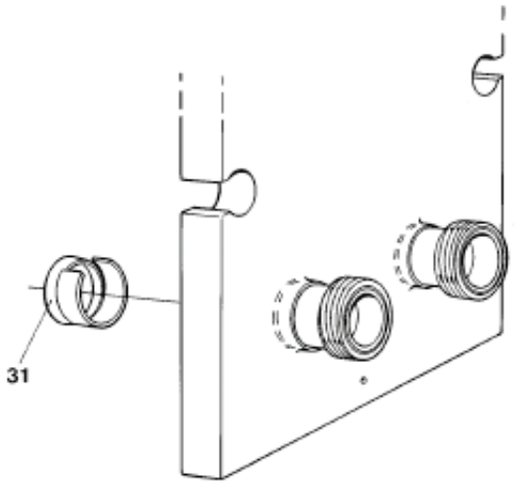

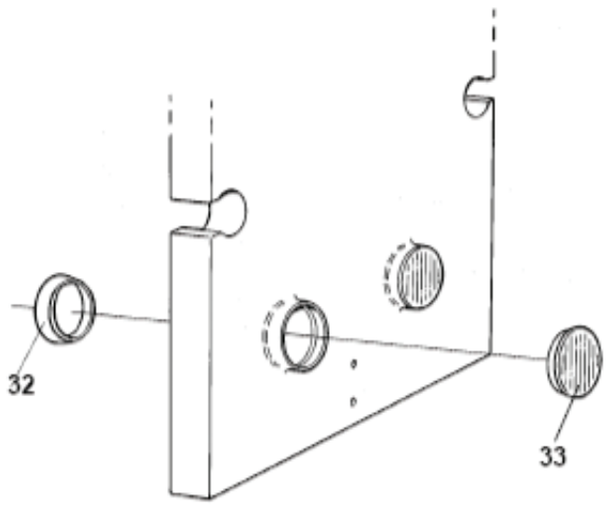

Pos. no.	Part number	Name
31	162530801	Blind washer
32	162530902	Blind washer
33	99013802	Seal plug

Table 5. Connection plate CLIP 8

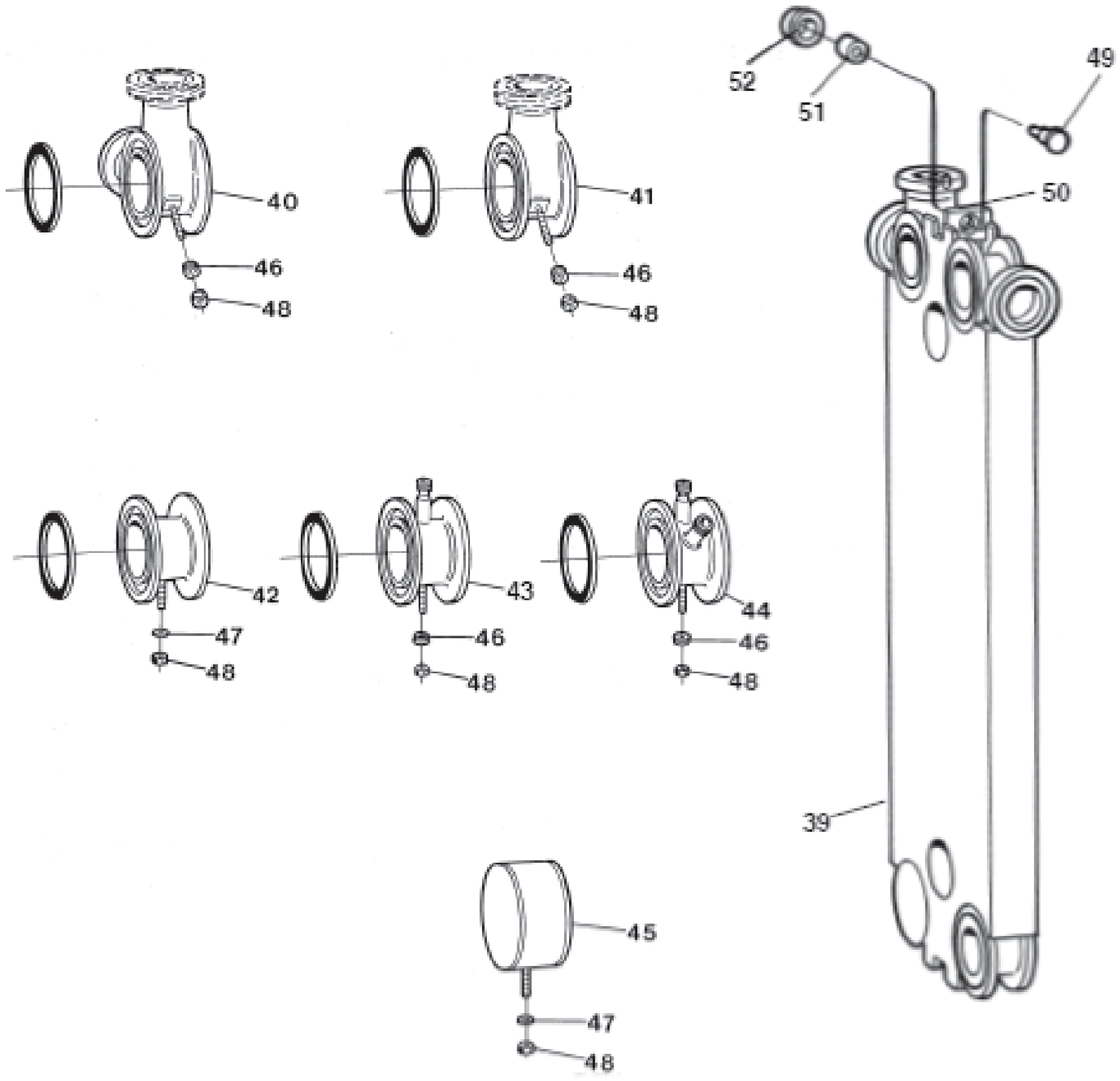

* When connection plates: Reduce max. number of plates with 13 plates / connection plate.

Pos. no.	Part number	Name	Comment
39	162057701	Connection plate	
40	162531701	Double corner	
40	162531702	Double corner	3-A Sanitary standard
41	162540701	Single corner	Horizontal position A-2, A-4 if bottom towards frame plate, otherwise A-1, A-3 Vertical position A-1, A-3 if bottom towards frame plate, otherwise A-2, A-4
41	162540702	Single corner	Horizontal position A-1, A-3 if bottom towards frame plate, otherwise A-2, A-4 Vertical position A-2, A-4 if bottom towards frame plate, otherwise A-1, A-3
41	162539701	Single corner	3-A Sanitary standard Horizontal position A-2, A-4 if bottom towards frame plate, otherwise A-1, A-3 Vertical position A-1, A-3 if bottom towards frame plate, otherwise A-2, A-4
41	162539702	Single corner	3-A Sanitary standard Horizontal position A-1, A-3 if bottom towards frame plate, otherwise A-2, A-4 Vertical position A-2, A-4 if bottom towards frame plate, otherwise A-1, A-3
42	162531801	Through passage	
42	162531802	Through passage	3-A Sanitary standard
42	162552601	Through passage	With 2" connection
42	162552602	Through passage	With 2" connection, 3-A Sanitary standard
43	162533301	Through passage	With drive tube
44	162531401	Through passage	With drive tube and nib
45	162530401	Blind corner	
46	162059301	Washer	
47	22310161	Washer	BRB 10.5x22
48	22180329	Nut	M6M 10
49	162078001	Shaft	
50	26008004	Stop screw	SK6SS 6x8
51	52840203	Needle bearing	NKI 20/16 INA
52	162078101	Wheel	

Note!
Nipples not included for single and double corner

Table 6. GASKETS - Clip 8

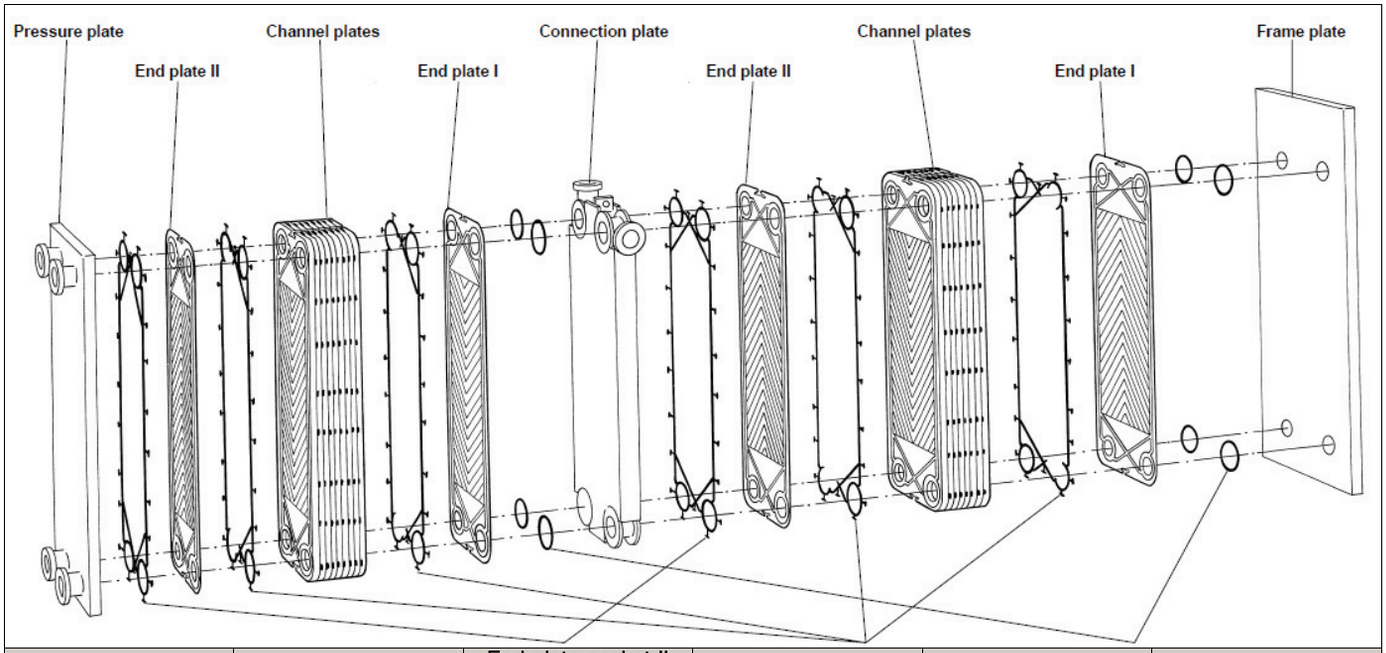

Gasket Qualities	Gasket type	End plate gasket II (or 2 pieces of Channel plate gasket)	Channel plate gasket End plate gasket I	Connection gasket	Colour marking
		Part numbers			
NBRP (Nitrile)	Clip-On	3233022096	3233022046		1 blue
NBRP (Nitrile)				3226416096	2 blue
EPDMF (FDA)	Clip-On	3233022078	3233022028	3226416078	2 grey
NBRHTF (FDA)	Clip-On	3233022077	3233022027	162950801	3 blue

Not manufactured anymore

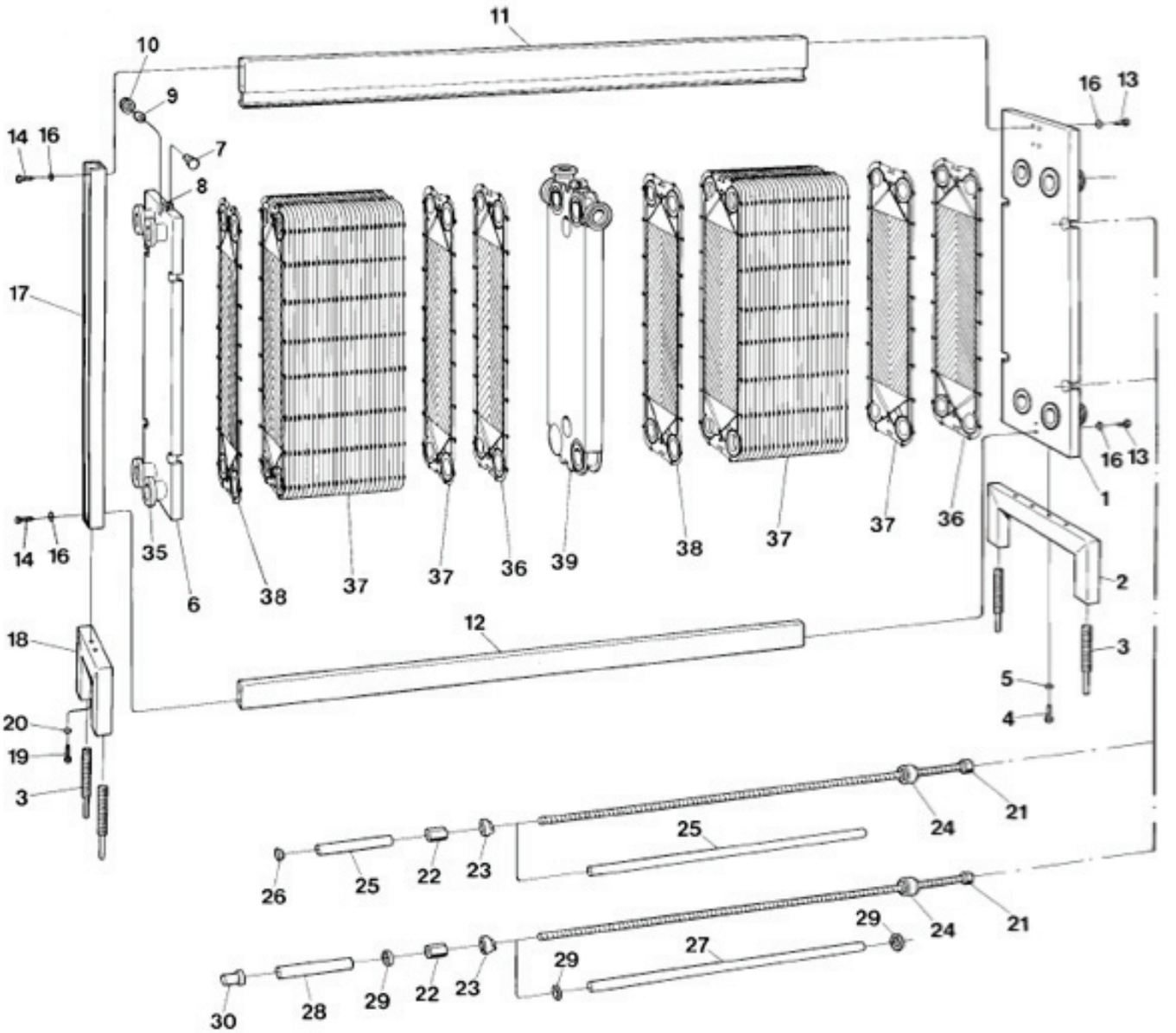

Pos. no.	Part number	Name	Comments
1	162056401	Frame Plate	-RM
	162072801	Frame Plate	-RH
2	162720201	Foot	
3	3232301661	Levelling screw	
4	26019206	Screw	M6S 20x45
5	22310139	Washer	BRB 21x36
6	162065901	Pressure plate	-RM
	162072901	Pressure plate	-RH
7	162078001	Shaft	
8	26008004	Stop screw	SK6SS 6x8
9	52840203	Needle bearing	NKI 20/16 INA
10	162078101	Wheel	

Pos. no. 11 Carrying bar	Pos. no.12 Guiding bar	Length (mm)	* Max. no.. of plates	
			0.5 mm	0.6 mm
162316901	3232340012	1200	124	122
162316902	3232340014	1800	212	209
162316903	3232340016	2400	299	295
162316904	3232340018	3000	387	381
162316905	3232340021	3600	474	468
162316906	3232340023	4200	562	554
162320301	3232340173	4800	600	600

Pos. no.	Part number	Name	Comments
13	22104605	Screw	M6S 12x100
14	22104606	Screw	M6S 12x40
16	22310135	Washer	BRB 13x24
17	162720701	Supporting column	
18	162717401	Foot	
19	221046303	Screw	M6S 16x40
20	22310137	Washer	BRB 17x30

Pos. no. 21 Tightening bolt M30 (NW60)	Length (mm)	* Max. no. of plates	
		0.5 mm	0.6 mm
3232400091	1050	102	101
3232400092	1650	190	187
3232400093	2250	277	273
3232400094	2850	365	360
3232400095	3450	453	446
3232400096	4050	540	532
3232400097	4650	600	600

RM:4 bolts
RH:6 bolts

Pos. no.	Part number	Name	Comments
22	3232420242	Nut	
23	3232429151	Lock washer	
	162411701	Wearing washer	-RH
24	162416101	Bearing house	
25	1995101093	Plastic tube	43/41, LDPE, Grey
26	99015202	Plug	LDPE, B-41.3
27	3232428411	Protecting tube, stainless steel	
28	3223920581	Protecting tube, stainless steel	
	1535158030	Protecting tube	-RH
29	3223920571	Guide ring for protecting tube	
30	3226540651	Protective cover	
		Blind connection	
35		Connection	
36		End plate I	
37		Channel plates	
38		End plate II	
39		Connection plate	

When Carrying bar length ≥ 4800 mm:
3232301664 Levelling screw L=250
3232612311 Protecting tube

When conn. plates: Reduce max. no. of plates with 15 plates/conn. plate.

Table 7. Blind connection

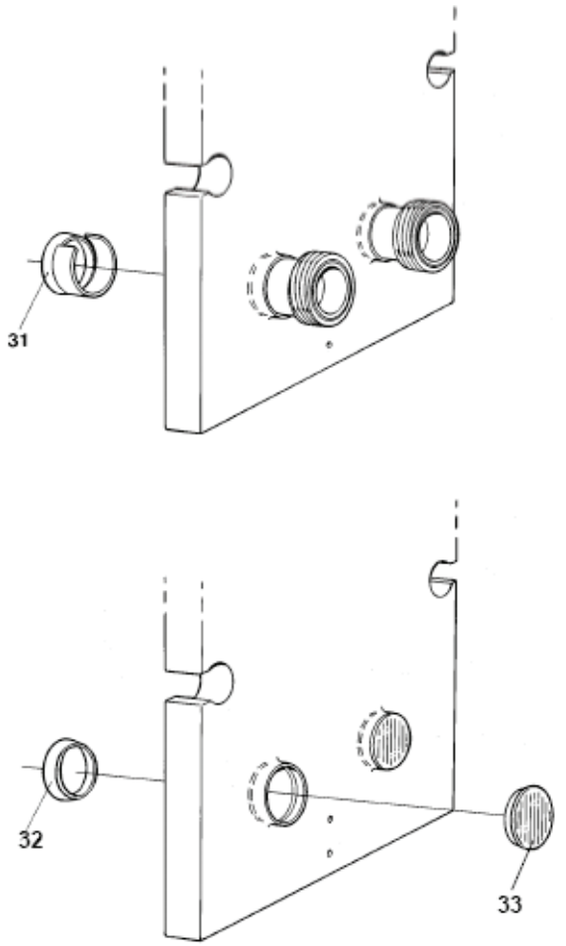

Pos. no.	Part number	Name
31	162537001	Blind washer
32	162534502	Blind washer
33	99013801	Seal plug

Table 8. Connection plate CLIP 10

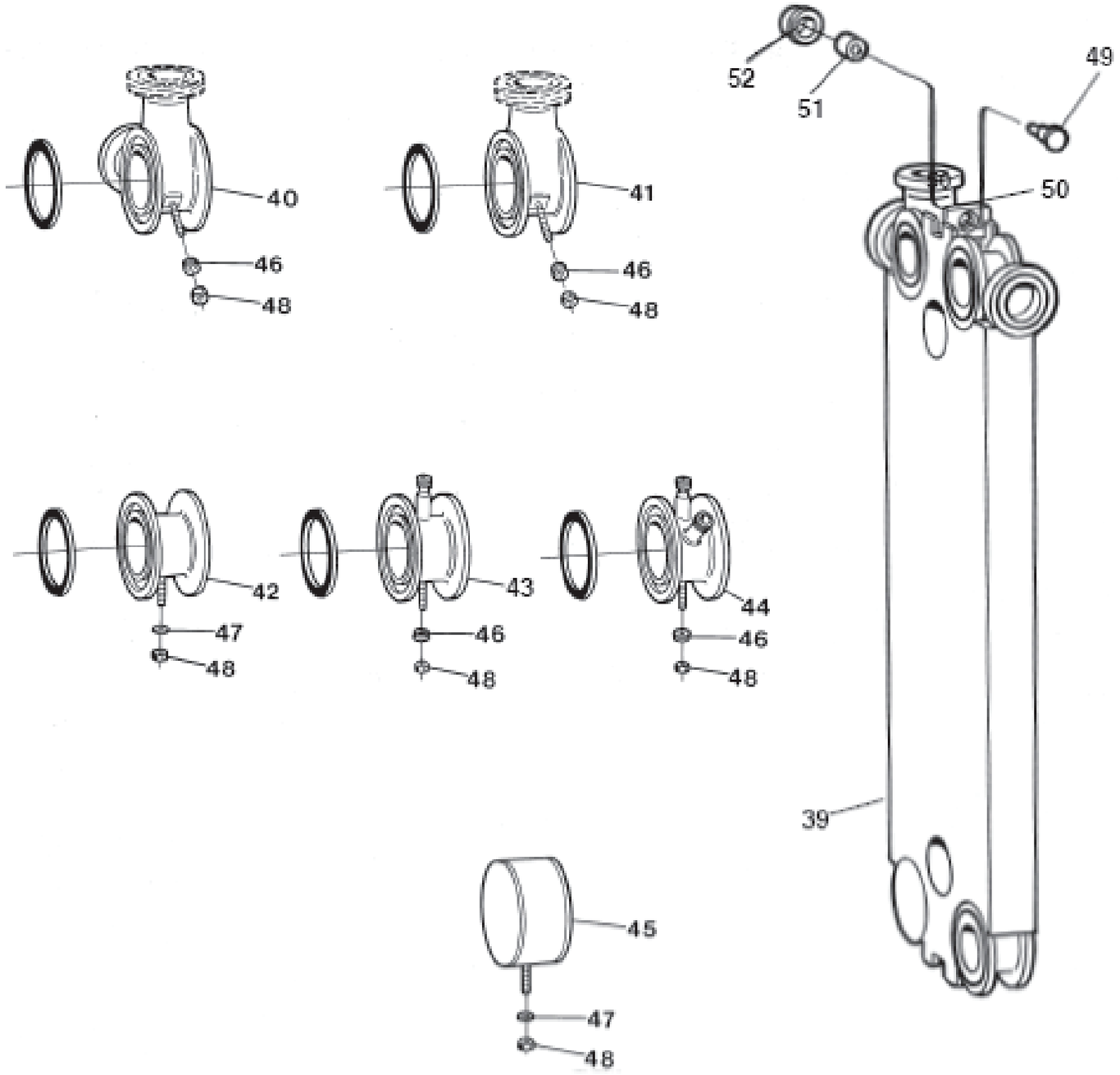

Pos. no.	Part number	Name	Comment
39	162063701	Connection plate	
40	162537701	Double corner, 100 mm conn.	
40	162540001	Double corner, 100 mm conn.	3-A Sanitary standard
40	162537702	Double corner, 76 mm conn.	
40	162540002	Double corner, 76 mm conn.	3-A Sanitary standard
41	162539801	Single corner, 100 mm conn.	Horizontal position A-2, A-4 if bottom towards frame plate, otherwise A-1, A-3 Vertical position A-1, A-3 if bottom towards frame plate, otherwise A-2, A-4
41	162539802	Single corner, 100 mm conn.	Horizontal position A-1, A-3 if bottom towards frame plate, otherwise A-2, A-4 Vertical position A-2, A-4 if bottom towards frame plate, otherwise A-1, A-3
41	162539901	Single corner, 100 mm conn.	3-A Sanitary standard Horizontal position A-2, A-4 if bottom towards frame plate, otherwise A-1, A-3 Vertical position A-1, A-3 if bottom towards frame plate, otherwise A-2, A-4
41	162539902	Single corner, 100 mm conn.	3-A Sanitary standard Horizontal position A-1, A-3 if bottom towards frame plate, otherwise A-2, A-4 Vertical position A-2, A-4 if bottom towards frame plate, otherwise A-1, A-3
41	162539803	Single corner, 76 mm conn.	Horizontal position A-2, A-4 if bottom towards frame plate, otherwise A-1, A-3 Vertical position A-1, A-3 if bottom towards frame plate, otherwise A-2, A-4
41	162539804	Single corner, 76 mm conn.	Horizontal position A-1, A-3 if bottom towards frame plate, otherwise A-2, A-4 Vertical position A-2, A-4 if bottom towards frame plate, otherwise A-1, A-3
41	162539903	Single corner, 76 mm conn.	3-A Sanitary standard Horizontal position A-2, A-4 if bottom towards frame plate, otherwise A-1, A-3 Vertical position A-1, A-3 if bottom towards frame plate, otherwise A-2, A-4
41	162539904	Single corner, 76 mm conn.	3-A Sanitary standard Horizontal position A-1, A-3 if bottom towards frame plate, otherwise A-2, A-4 Vertical position A-2, A-4 if bottom towards frame plate, otherwise A-1, A-3
42	162537801	Through passage	
42	162537802	Through passage	3-A Sanitary standard
42	162555601	Through passage	With 2" connection
42	162555602	Through passage	With 2" connection, 3-A Sanitary standard
43	162538001	Through passage	With drive tube
44	162537901	Through passage	With drive tube and nib
45	162536801	Blind corner	
46	162059301	Washer	
47	22310161	Washer	BRB 10.5x22
48	22180329	Nut	M6M 10
49	162078001	Shaft	
50	26008004	Stop screw	SK6SS 6x8
51	52840203	Needle bearing	NKI 20/16 INA
52	162078101	Wheel	

Note!
Nipples not included for single and double corner

GASKETS - Clip 10

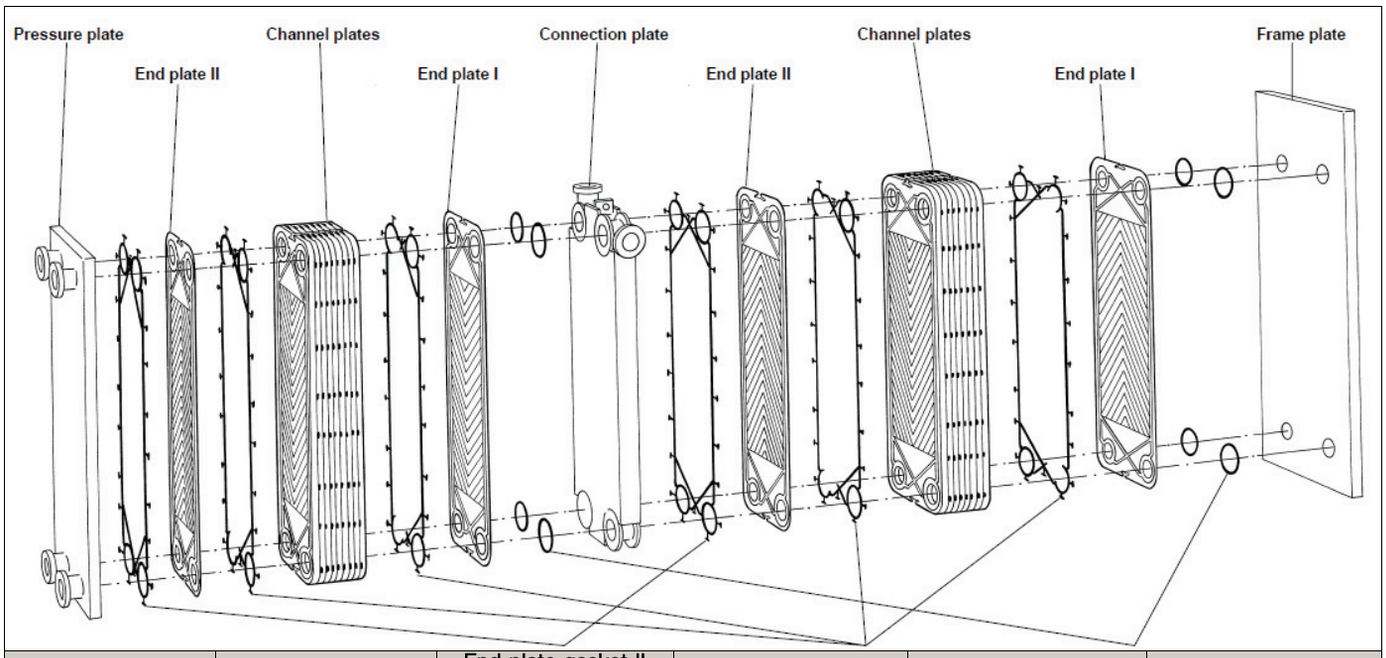

Qualities	Gasket type	End plate gasket II (or 2 pieces of Channel plate gasket)	Channel plate gasket End plate gasket I	Connection gasket	Colour marking
		Part numbers			
NBRP (Nitrile)	Clip-On	3233023096	3233023046	3223909896	1 blue
EPDMF (FDA)	Clip-On	3233023078	3233023028	3223909878	2 grey
NBRHTF (FDA)	Clip-On	3233023077	3233023027	162950701	3 blue

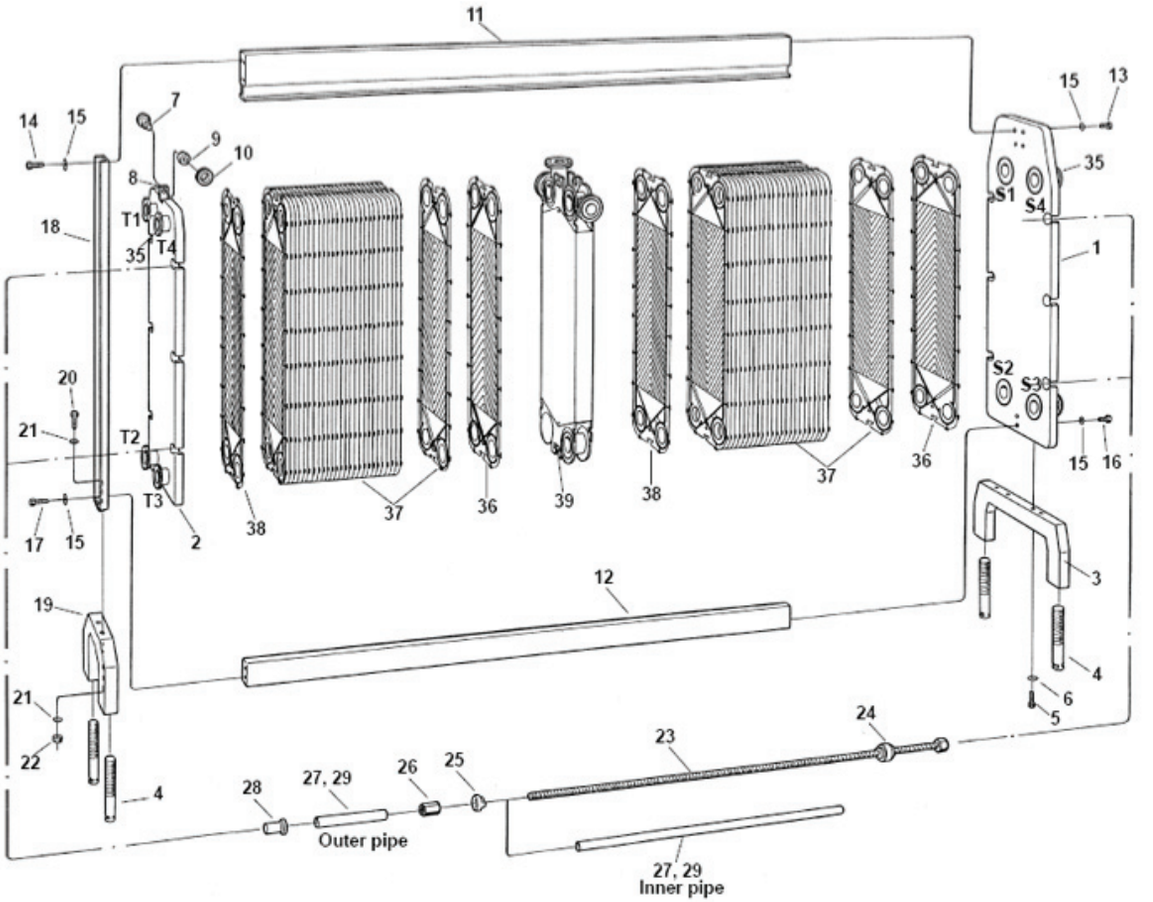
11
14
15
7
9
10
8
T1
T4
35
18
20
21
T2
T3
17
15
2
38
37
36
39
38
37
36
15
13
35
S1
S4
1
S2
S3
15
16
3
4
6
5
12
19
21
22
4
28
27, 29
Outer pipe
26
25
24
23
27, 29
Inner pipe

Pos. no. 1 Frame plate					Pos. no. 2 Pressure plate				
Part number	Hole				Part number	Hole			
	S1	S2	S3	S4		T1	T2	T3	T4
164083201	X	X	X	X	164083501	X	X	X	X
164083202	X	X	X		164083502	X	X	X	
164083203		X	X	X	164083503		X	X	X
164083204	X		X	X	164083504	X		X	X
164083205	X	X		X	164083505	X	X		X
164083206	X	X			164083506	X	X		
164083207	X		X		164083507	X		X	
164083208	X			X	164083508	X			X
164083209		X	X		164083509		X	X	
164083210		X		X	164083510		X		X
164083211			X	X	164083511			X	X
164083212	X				164083512	X			
164083213		X			164083513		X		
164083214			X		164083514			X	
164083215				X	164083515				X
164083216					164083516				

Pos. no.	Part number	Name	Comments
3	164044101	Foot	Low foot
	164054801	Foot	High foot
4	164088502	Levelling screw	For low foot
	164088501	Levelling screw	For high foot
5	221046303	Screw	M6S 16x40
6	22310137	Washer	BRB 17x30
7	162078001	Shaft	
8	26008004	Stop screw	SK6SS 6x8
9	52840203	Needle bearing	NKI 20/16 INA
10	162078101	Wheel	

Pos. no. 11 Carrying bar	Pos. no. 12 Guiding bar	Length mm	* Max. no. of plates	
			0.5 mm	0.6 mm
162315001	3232340012	1200	142	140
162315002	3232340014	1800	236	233
162315003	3232340016	2400	331	326
162315004	3232340018	3000	425	419
162315005	3232340021	3600	440	440

Pos. no.	Part number	Name	Comments
13	22104605	Screw	M6S 12x100
14	22104606	Screw	M6S 12x40
15	22310135	Washer	BRB 13x24
16	22104611	Screw	M6S 12x70
17	22104602	Screw	M6S 12x25
18	164044801	Support column	
19	164044501	Foot	Low foot
	164055101	Foot	High foot
20	221046303	Screw	M6S 16x40
21	22310137	Washer	BRB 17x30
22	22180340	Nut	M16

Pos. no. 23 Tightening bolt / locking bolt M30	Length (mm)	* Max. no. of plates	
		0.5 mm	0.6 mm
162446303 / 162446303	1160 / 1160	142	140
162446305 / 162446304	1760 / 1460	236	233
162446307 / 162446306	2360 / 2060	331	326
162446308 / 162446307	2960 / 2360	425	419
162446309 / 162446308	3560 / 2960	440	440

Pos. no.	Part number	Name
24	162415701	Bearing box
25	3223448971	Lock washer
26	164166802	Nut

Pos. no. 27 Protecting pipe	Length (mm)		Length (mm)	* Max. no. of plates	
		Inner pipe		0.5 mm	0.6 mm
164135803	964		1160	142	140
164135804	1264		1460	236	233
164135805	1564		1760	236	233
164135806	1864	A + 72	2060	331	326
164135807	2164		2360	331	326
164135808	2764		2960	425	419
164135809	3364		3560	440	440

Pos. no.	Part number	Name	Comment
28	164136004	Cap	
29	1995101092	Plastic tube	
30	162530802	Blind connection	
35		Connection	
36		End plate I	
37		Channel plates	
38		End plate II	
39		Connection plate	

Note!

* When connection plates: Reduce max. number of plates with 13 plates / connection plate.

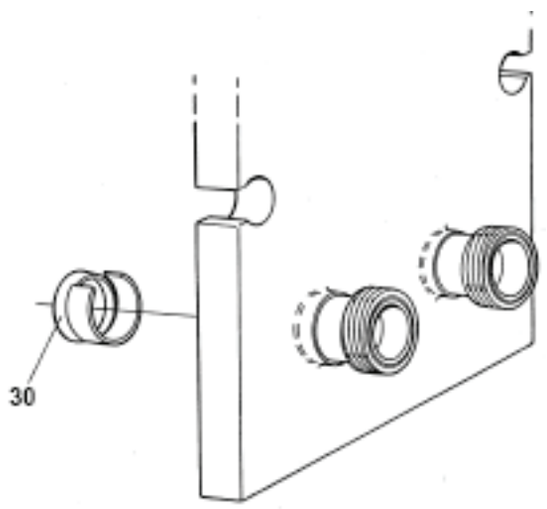

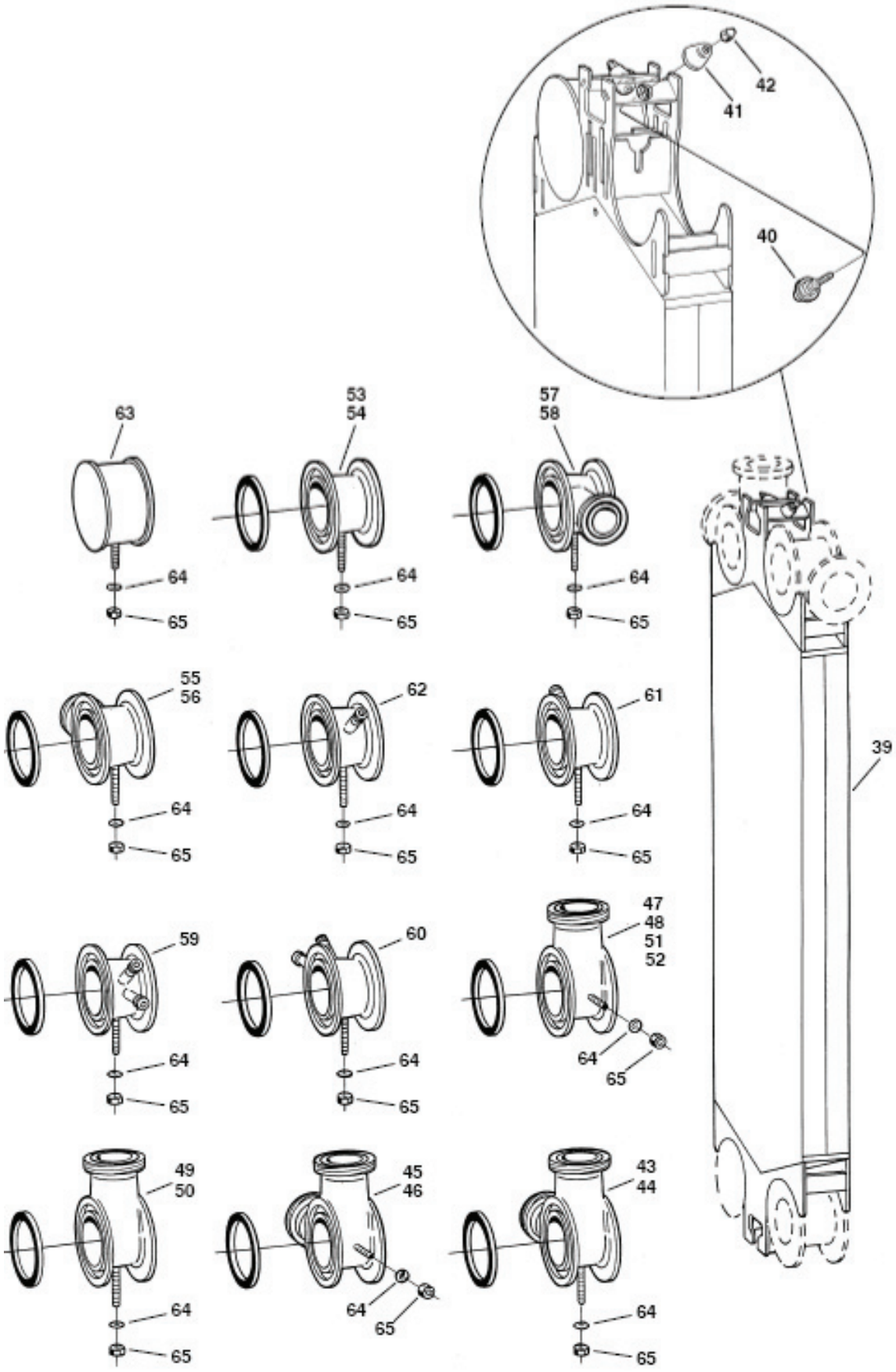
42
41
40
63
53
54
57
58
64
65
55
56
62
61
39
59
60
47
48
51
52
49
50
45
46
43
44

Pos. no.	Part number	Name	Comment
39	164037701	Connection plate	
40	164038601	Bolt	
41	164038501	Dished washer	
42	164038701	Acron nut	
43	164086701	Double corner	Position A-1 and A-3
44	164086707	Double corner, 3A	Position A-1 and A-3
45	164086702	Double corner	Position A-2 and A-4
46	164086708	Double corner, 3A	Position A-2 and A-4
47	1644086601	Single corner	Vertical position A-1 and A-3 if bottom towards frame plate, otherwise A-2 and A-4
48	1644086606	Single corner, 3A	Vertical position A-1 and A-3 if bottom towards frame plate, otherwise A-2 and A-4
49	1644086602	Single corner	Horizontal all positions
50	1644086607	Single corner, 3A	Horizontal all positions
51	1644086603	Single corner	Vertical position A-2 and A-4 if bottom towards frame plate, otherwise A-1 and A-3
52	1644086608	Single corner, 3A	Vertical position A-2 and A-4 if bottom towards frame plate, otherwise A-1 and A-3
53	162531801	Through passage	
54	162531802	Through passage, 3A	
55	164086401	Through passage	With 2" connection, position A-1 and A-3
56	164086403	Through passage, 3A	With 2" connection, position A-1 and A-3
57	164086402	Through passage	With 2" connection, position A-2 and A-4
58	164086404	Through passage, 3A	With 2" connection, position A-2 and A-4
59	164086501	Through passage	With dive tube and nib, position A-1
60	164086502	Through passage	With dive tube and nib, position A-4
61	164086503	Through passage	With dive tube, position A-1 and A-3
62	164086504	Through passage	With dive tube, position A-2 and A-4
63	162530401	Blind corner	
64	22310161	Washer	BRB 10.5x22
65	22180329	Nut	M6M 10

Note!
* When connection plates: Reduce max. number of plates with 13 plates / connection plate.
Nipples not included for single and double corner

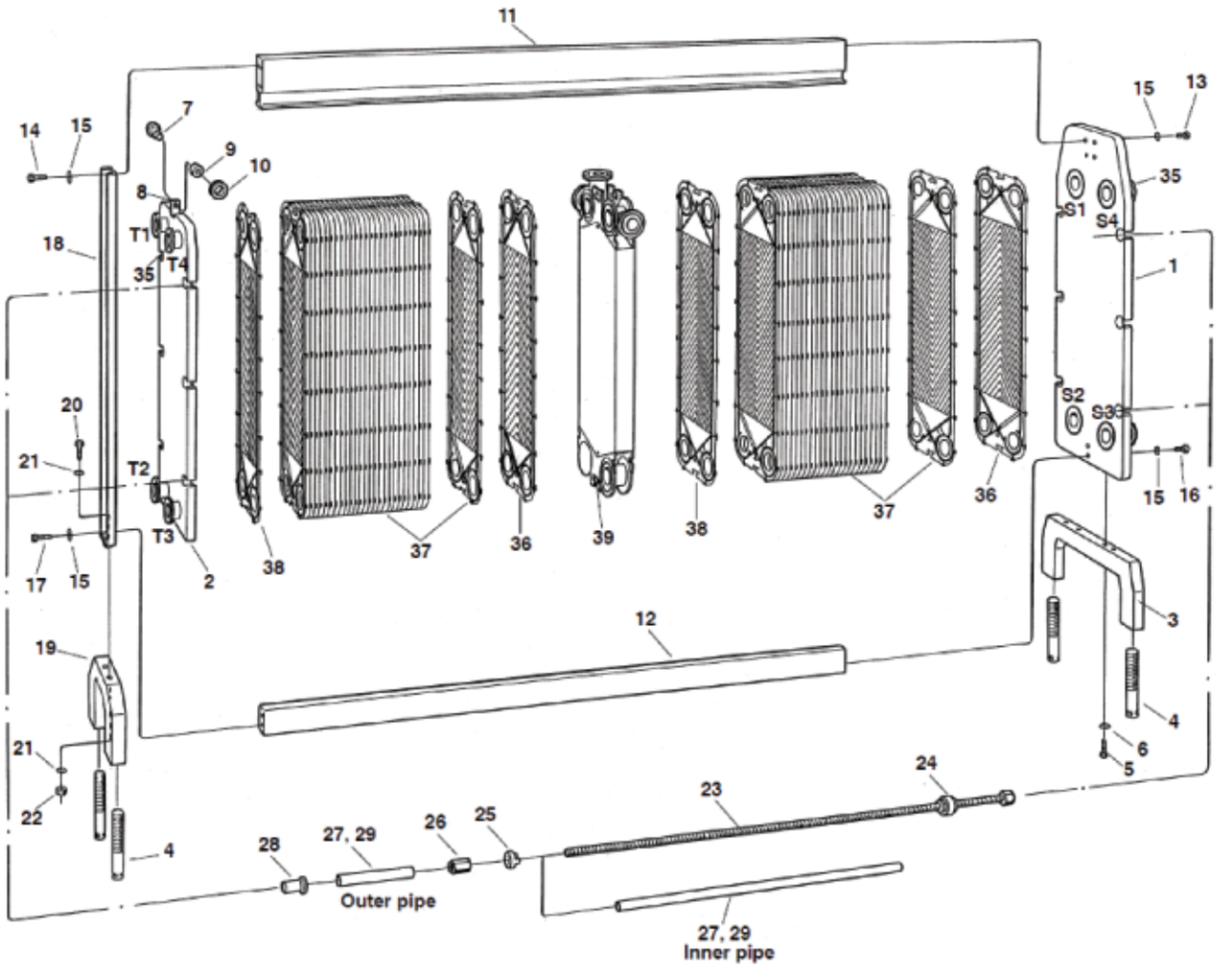
11
14
15
7
9
10
8
T1
T4
35
18
20
21
T2
T3
17
15
2
38
37
36
39
38
37
36
15
13
35
S1
S4
1
S2
S3
15
16
3
4
6
5
12
19
21
22
4
28
27, 29
Outer pipe
26
25
24
23
27, 29
Inner pipe

Pos. no. 1 Frame plate					Pos. no. 2 Pressure plate				
	Hole					Hole			
Part number	S1	S2	S3	S4	Part number	T1	T2	T3	T4
164083301	X	X	X	X	164083601	X	X	X	X
164083302	X	X	X		164083602	X	X	X	
164083303		X	X	X	164083603		X	X	X
164083304	X		X	X	164083604	X		X	X
164083305	X	X		X	164083605	X	X		X
164083306	X	X			164083606	X	X		
164083307	X		X		164083607	X		X	
164083308	X			X	164083608	X			X
164083309		X	X		164083609		X	X	
164083310		X		X	164083610		X		X
164083311			X	X	164083611			X	X
164083312	X				164083612	X			
164083313		X			164083613		X		
164083314			X		164083614			X	
164083315				X	164083615				X
164083316					164083616				

Pos. no.	Part number	Name	Comments
3	164044101	Foot	Low foot
	164054801	Foot	High foot
4	164088502	Levelling screw	For low foot
	164088501	Levelling screw	For high foot
5	221046303	Screw	M6S 16x40
6	22310137	Washer	BRB 17x30
7	162078001	Shaft	
8	26008004	Stop screw	SK6SS 6x8
9	52840203	Needle bearing	NKI 20/16 INA
10	162078101	Wheel	

Pos. no. 11 Carrying bar	Pos. no. 12 Guiding bar	Length (mm)	* Max. no. of plates	
			0.5 mm	0.6 mm
162315001	3232340012	1200	142	140
162315002	3232340014	1800	236	233
162315003	3232340016	2400	331	326
162315004	3232340018	3000	425	419
162315005	3232340021	3600	440	440

Pos. no.	Part number	Name	Comments
13	22104605	Screw	M6S 12x100
14	22104606	Screw	M6S 12x40
15	22310135	Washer	BRB 13x24
16	22104611	Screw	M6S 12x70
17	22104602	Screw	M6S 12x25
18	164044801	Support column	
19	164044501	Foot	Low foot
	164055101	Foot	High foot
20	221046303	Screw	M6S 16x40
21	22310137	Washer	BRB 17x30
22	22180340	Nut	M16

Pos. no. 23 Tightening bolt / locking bolt M30	Length (mm)	* Max. no. of plates	
		0.5 mm	0.6 mm
162446303 / 162446303	1160 / 1160	142	140
162446305 / 162446304	1760 / 1460	236	233
162446307 / 162446306	2360 / 2060	331	326
162446308 / 162446307	2960 / 2360	425	419
162446309 / 162446308	3560 / 2960	440	440

Pos. no.	Part number	Name
24	162415701	Bearing box
25	3223448971	Lock washer
26	164166802	Nut

Pos. no. 27 Protecting pipe	Length mm		Length	* Max. no. of plates	
		Inner pipe	mm	0.5 mm	0.6 mm
164135803	964		1160	142	140
164135804	1264		1460	236	233
164135805	1564		1760	236	233
164135806	1864	A + 72	2060	331	326
164135807	2164		2360	331	326
164135808	2764		2960	425	419
164135809	3364		3560	440	440

Pos. no.	Part number	Name
28	164136004	Cap
29	1995101092	Plastic tube
30	162530802	Blind connection
35		Connection
36		End plate I
37		Channel plates
38		End plate II
39		Connection plate

* When connection plates: Reduce max. number of plates with 13 plates / connection plate.

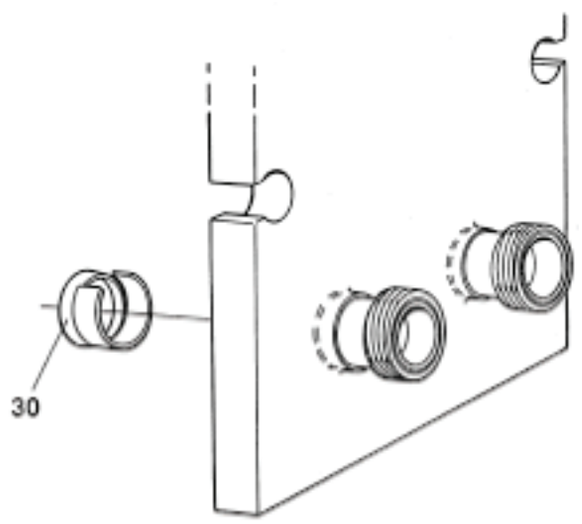

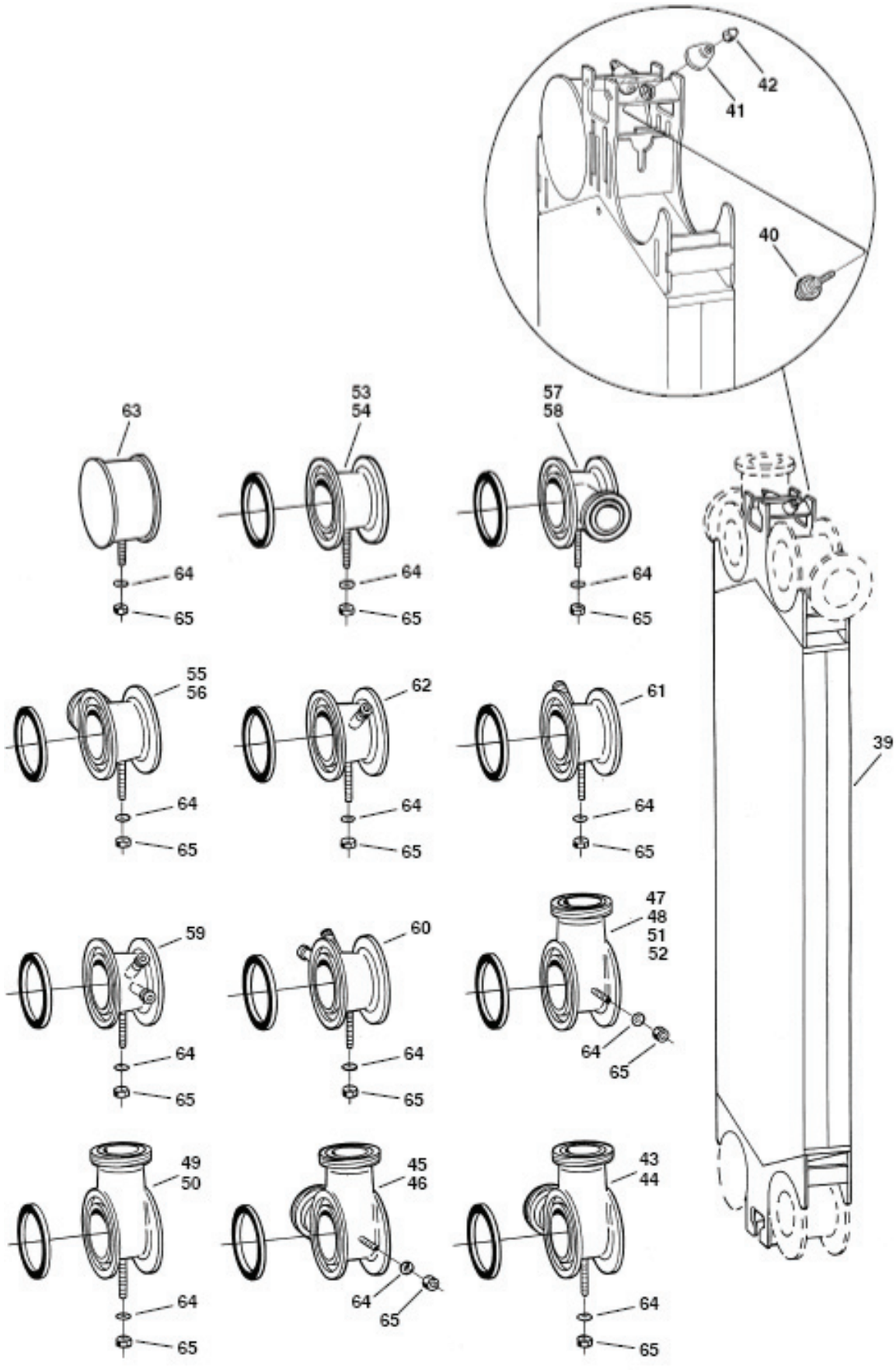
42
41
40
63
53
54
57
58
64
65
55
56
62
61
39
59
60
47
48
51
52
49
50
45
46
43
44

Pos. no.	Part number	Name	Comment
39	164037701	Connection plate	
40	164038601	Bolt	
41	164038501	Dished washer	
42	164038701	Acron nut	
43	164086701	Double corner	Position A-1 and A-3
44	164086707	Double corner, 3A	Position A-1 and A-3
45	164086702	Double corner	Position A-2 and A-4
46	164086708	Double corner, 3A	Position A-2 and A-4
47	1644086601	Single corner	Vertical position A-1 and A-3 if bottom towards frame plate, otherwise A-2 and A-4
48	1644086606	Single corner, 3A	Vertical position A-1 and A-3 if bottom towards frame plate, otherwise A-2 and A-4
49	1644086602	Single corner	Horizontal all positions
50	1644086607	Single corner, 3A	Horizontal all positions
51	1644086603	Single corner	Vertical position A-2 and A-4 if bottom towards frame plate, otherwise A-1 and A-3
52	1644086608	Single corner, 3A	Vertical position A-2 and A-4 if bottom towards frame plate, otherwise A-1 and A-3
53	162531801	Through passage	
54	162531802	Through passage, 3A	
55	164086401	Through passage	With 2" connection, position A-1 and A-3
56	164086403	Through passage, 3A	With 2" connection, position A-1 and A-3
57	164086402	Through passage	With 2" connection, position A-2 and A-4
58	164086404	Through passage, 3A	With 2" connection, position A-2 and A-4
59	164086501	Through passage	With dive tube and nib, position A-1
60	1640865-02	Through passage	With dive tube and nib, position A-4
61	164086503	Through passage	With dive tube, position A-1 and A-3
62	164086504	Through passage	With dive tube, position A-2 and A-4
63	162530401	Blind corner	
64	22310161	Washer	BRB 10.5x22
65	22180329	Nut	M6M 10

Note!
Nipples not included for single and double corner

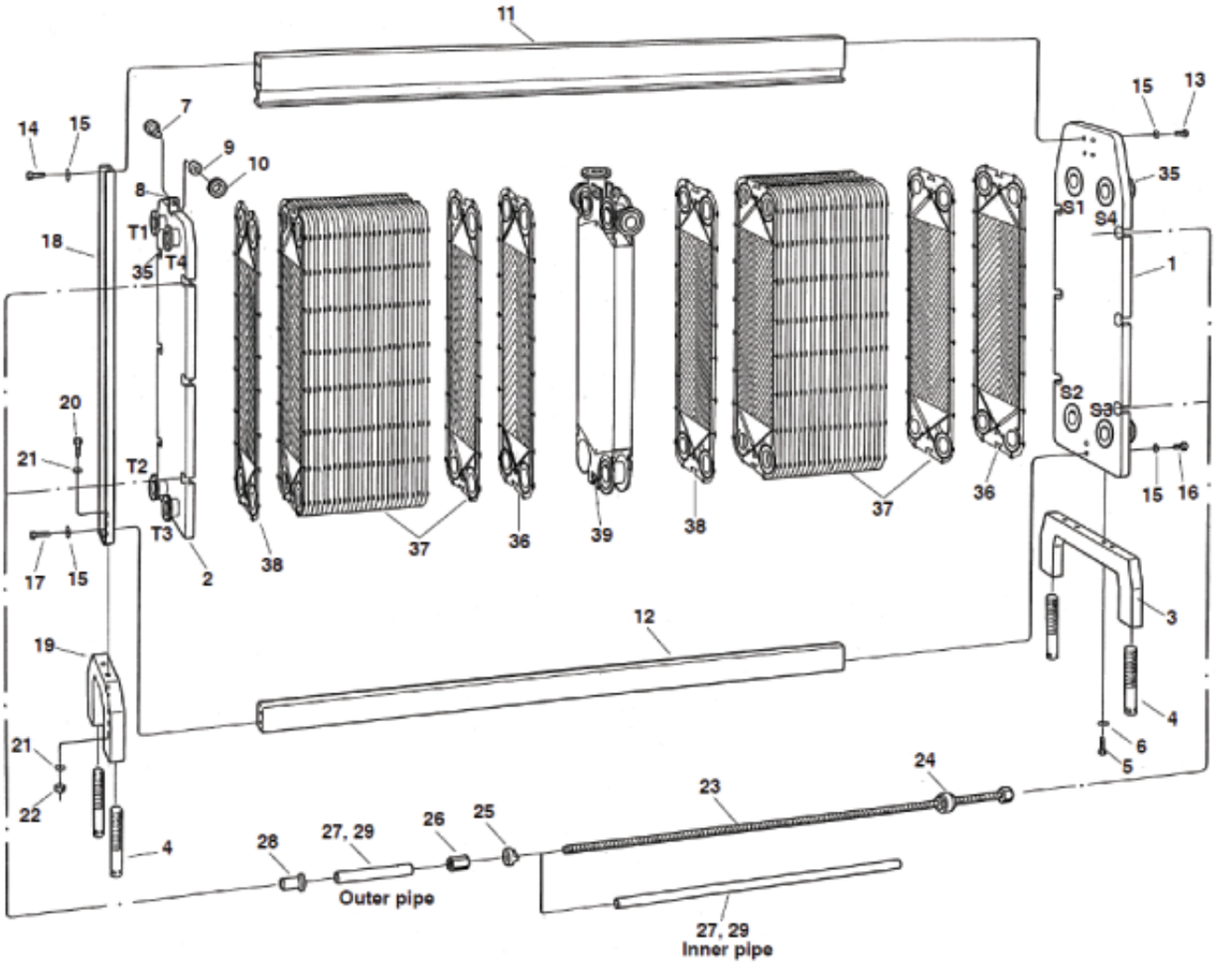
11
14
15
7
9
10
8
T1
T4
35
18
20
21
T2
T3
17
15
2
38
37
36
39
38
37
36
15
13
35
S1
S4
1
S2
S3
15
16
3
4
6
5
12
19
21
22
4
24
23
28
27, 29
26
25
Outer pipe
27, 29
Inner pipe

Pos. no.	Part number	Name	Comments
3	164044101	Foot	Low foot
	164054801	Foot	High foot
4	164088502	Levelling screw	For low foot
	164088501	Levelling screw	For high foot
5	221046303	Screw	M6S 16x40
6	22310137	Washer	BRB 17x30
7	162078001	Shaft	
8	26008004	Stop screw	SK6SS 6x8
9	52840203	Needle bearing	NKI 20/16 INA
10	162078101	Wheel	

Pos. no. 11 Carrying bar	Pos. no. 12 Guiding bar	Length (mm)	* Max. no. of plates	
			0.5 mm	0.6 mm
162315001	3232340012	1200	142	140
162315002	3232340014	1800	236	233
162315003	3232340016	2400	331	326
162315004	3232340018	3000	425	419
162315005	3232340021	3600	440	440

Pos. no.	Part number	Name	Comments
13	22104605	Screw	M6S 12x100
14	22104606	Screw	M6S 12x40
15	22310135	Washer	BRB 13x24
16	22104611	Screw	M6S 12x70
17	22104602	Screw	M6S 12x25
18	164044801	Supporting column	
19	164044501	Foot	Low foot
	164055101	Foot	High foot
20	221046303	Screw	M6S 16x40
21	22310137	Washer	BRB 17x30
22	22180340	Nut	M16

Pos. no. 23 Tightening bolt / locking bolt M30	Length (mm)	* Max. no. of plates	
		0.5 mm	0.6 mm
162446303 / 162446303	1160 / 1160	142	140
162446305 / 162446304	1760 / 1460	236	233
162446307 / 162446306	2360 / 2060	331	326
162446308 / 162446307	2960 / 2360	425	419
162446309 / 162446308	3560 / 2960	440	440

Pos. no.	Part number	Name
24	162415701	Bearing box
25	3223448971	Lock washer
26	164166802	Nut

Pos. no. 27	Length (mm)		Length bolt (mm)	* Max. no. of plates	
Protecting pipe		Inner pipe		0.5 mm	0.6 mm
164135803	964		1160	142	140
164135804	1264		1460	236	233
164135805	1564		1760	236	233
164135806	1864	A + 72	2060	331	326
164135807	2164		2360	331	326
164135808	2764		2960	425	419
164135809	3364		3560	440	440

Pos. no.	Part number	Name
28	164136004	Cap
29	1995101092	Plastic tube
30	162530801	Blind connection
35		Connection
36		End plate I
37		Channel plates
38		End plate II
39		Connection plate

* When connection plates: Reduce max. number of plates with 13 plates / connection plate.

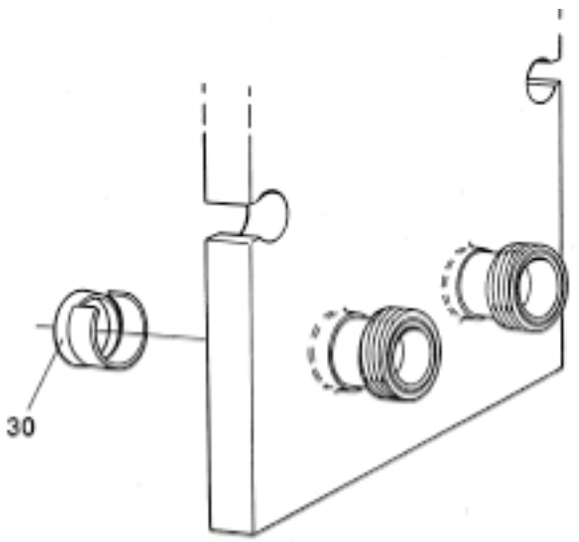

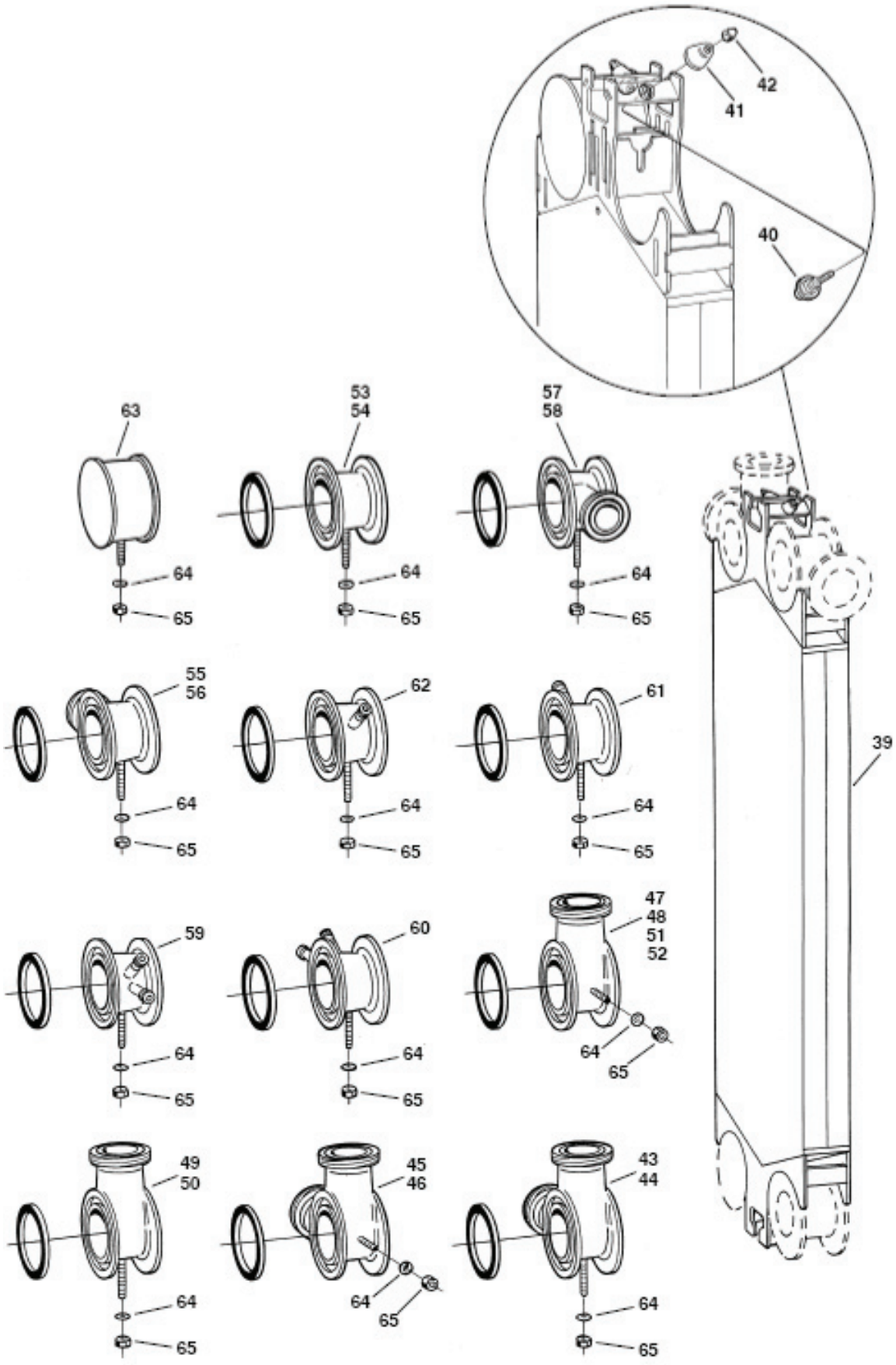
42
41
40
63
53
54
57
58
64
65
55
56
62
61
39
59
60
47
48
51
52
49
50
45
46
43
44

Table 9. Connection plate

Pos	Part number	Name	Comment
39	164037701	Connection plate	
40	164038601	Bolt	
41	164038501	Dished washer	
42	164038701	Acron nut	
43	164086701	Double corner	Position A-1 and A-3
44	164086707	Double corner, 3A	Position A-1 and A-3
45	164086702	Double corner	Position A-2 and A-4
46	164086708	Double corner, 3A	Position A-2 and A-4
47	164086601	Single corner	Vertical position A-1, A-3 if bottom towards frame plate, otherwise A-2, A-4
48	164086606	Single corner, 3A	Vertical position A-1, A-3 if bottom towards frame plate, otherwise A-2, A-4
49	164086602	Single corner	Horizontal all positions
50	164086607	Single corner, 3A	Horizontal all positions
51	164086603	Single corner	Vertical position A-2, A-4 if bottom towards frame plate, otherwise A-1, A-3
52	164086608	Single corner, 3A	Vertical position A-2, A-4 if bottom towards frame plate, otherwise A-1, A-3
53	162531801	Through passage	
54	162531802	Through passage, 3A	
55	164086401	Through passage	With 2" connection, position A-1 and A-3
56	164086403	Through passage, 3A	With 2" connection, position A-1 and A-3
57	164086402	Through passage	With 2" connection, position A-2 and A-4
58	164086404	Through passage, 3A	With 2" connection, position A-2 and A-4
59	164086501	Through passage	With dive tube and nib, position A-1
60	164086502	Through passage	With dive tube and nib, position A-4
61	164086503	Through passage	With dive tube, position A-1 and A-3
62	164086504	Through passage	With dive tube, position A-2 and A-4
63	162530401	Blind corner	
64	22310161	Washer	BRB 10.5x22
65	22180329	Nut	M6M 10

Note! Nipples not included for single and double corner

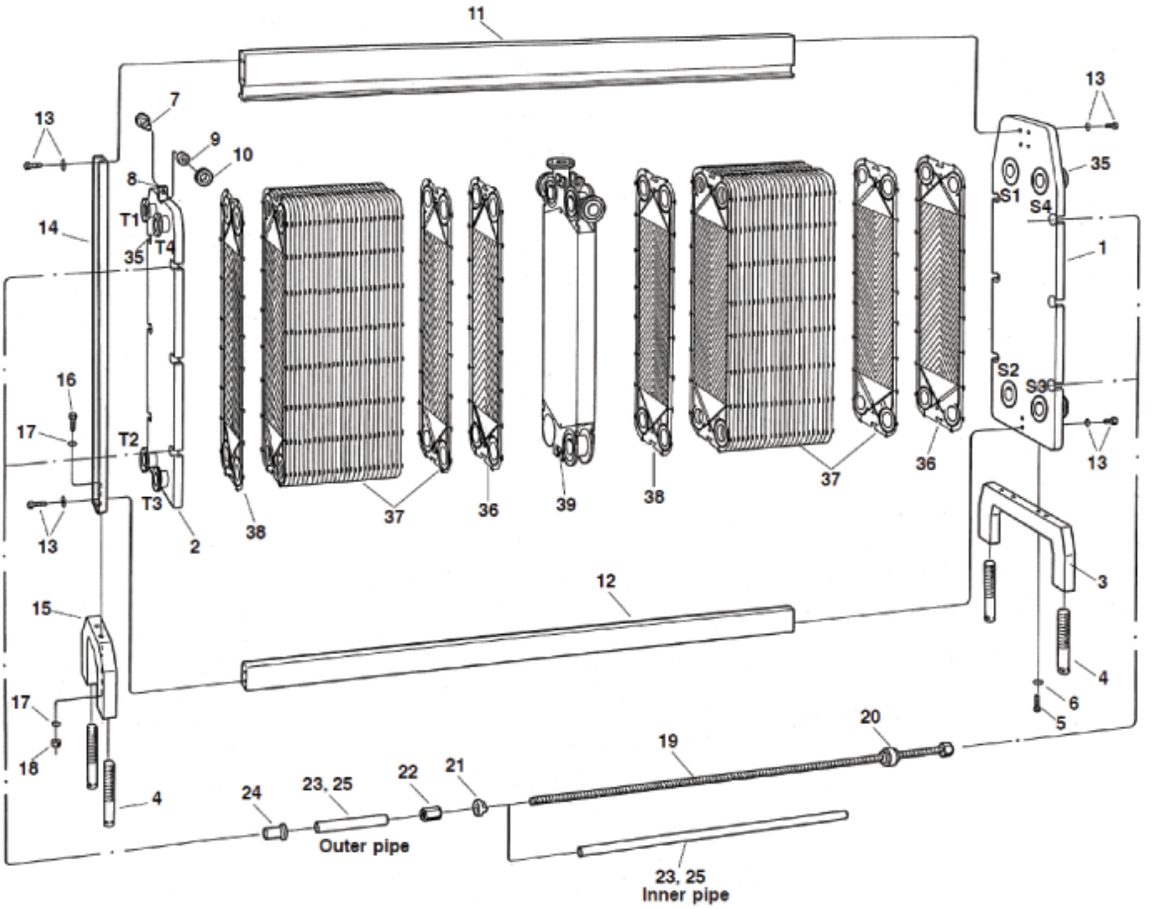
11
13
7
9
10
8
T1
T4
35
14
16
17
T2
T3
2
38
37
36
39
38
37
36
13
35
S1
S4
1
S2
S3
13
3
4
6
5
12
15
17
18
4
24
23, 25
22
21
19
20
Outer pipe
23, 25
Inner pipe

Pos. no. 1 Frame plate					Pos. no. 2 Pressure plate				
Part number	Hole				Part number	Hole			
	S1	S2	S3	S4		T1	T2	T3	T4
3450167201	X	X	X	X	3450167301	X	X	X	X
3450167202	X	X	X		3450167302	X	X	X	
3450167203		X	X	X	3450167303		X	X	X
3450167204	X		X	X	3450167304	X		X	X
3450167205	X	X		X	3450167305	X	X		X
3450167206	X	X			3450167306	X	X		
3450167207	X		X		3450167307	X		X	
3450167208	X			X	3450167308	X			X
3450167209		X	X		3450167309		X	X	
3450167210		X		X	3450167310		X		X
3450167211			X	X	3450167311			X	X
3450167212	X				3450167312	X			
3450167213		X			3450167313		X		
3450167214			X		3450167314			X	
3450167215				X	3450167315				X
3450167216					3450167316				

Pos. no.	Part number	Name	Comments
3	164053901	Foot	Low
	164088401	Foot	High foot
4	164088502	Levelling screw	For low foot
	164088501	Levelling screw	For high foot
5	221046303	Screw	M6S 16x40
6	22310137	Washer	BRB 17x30
7	162078001	Shaft	
8	26008004	Stop screw	SK6SS 6x8
9	52840203	Needle bearing	NKI 20/16 INA
10	162078101	Wheel	

Pos. no. 11 Carrying bar	Pos. no. 12 Guiding bar	Length (mm)	* Max. no. of plates	
			0.5 mm	0.6 mm
162316901	3232340012	1200	124	122
162316902	3232340014	1800	212	209
162316903	3232340016	2400	299	295
162316904	3232340018	3000	387	381
162316905	3232340021	3600	474	468
162316906	3232340023	4200	562	554
162320301	3232340173	4800	600	600

Pos. no.	Part number	Name	Comments
13	164085808	Plastic bag	For bars ≤ 4200 mm
	164085809	Plastic bag	For bars > 4200 mm
14	164044802	Support column	
15	164044501	Foot	Low foot
	164055101	Foot	High foot
16	221046303	Screw	M6S 16x40
17	22310137	Washer	BRB 17x30
18	22180340	Nut	M16

Pos. no. 19 Tightening bolt / locking bolt M39	Length (mm)	* Max. no. of plates	
		0.5 mm	0.6 mm
162446201 / 162446201	1160 / 1160	124	122
162446203 / 162446202	1760 / 1460	212	209
162446205 / 162446204	2360 / 2060	299	295
162446206 / 162446205	2960 / 2360	387	381
162446207 / 162446206	3560 / 2960	474	468
162446208 / 162446207	4160 / 3560	562	554
162446209/ 162446208	4760 / 4160	600	600

Pos. no.	Part number	Name
20	162416101	Bearing box
21	3232429151	Lock washer
22	164166901	Nut

Pos. no. 23 Protecting pipe	Length mm		Length bolt (mm)	* Max. no. of plates	
		Inner pipe		0.5 mm	0.6mm
164135901	915		1160	124	122
164135902	1215		1460	212	209
164135903	1515		1760	212	209
164135904	1815		2060	299	295
164135905	2115	A + 82	2360	387	381
164135906	2715		2960	387	381
164135907	3315		3560	474	468
164135908	3915		4160	474	468
164135909	4515		4760	562	554

Pos. no.	Part number	Name
24	164136005	Cap
25	1995101093	Plastic tube
26	162537002	Blind connection
35		Connection
36		End plate I
37		Channel plates
38		End plate II
39		Connection plate

* When conn. plates: Reduce max. no. of plates with 15 plates / conn. plate.

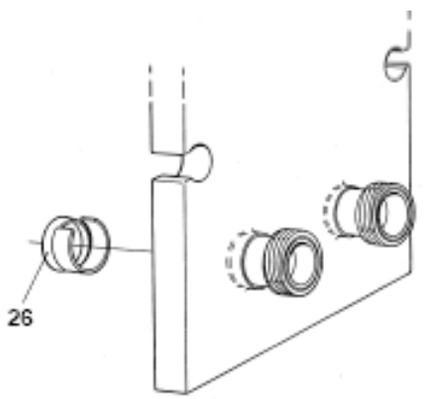

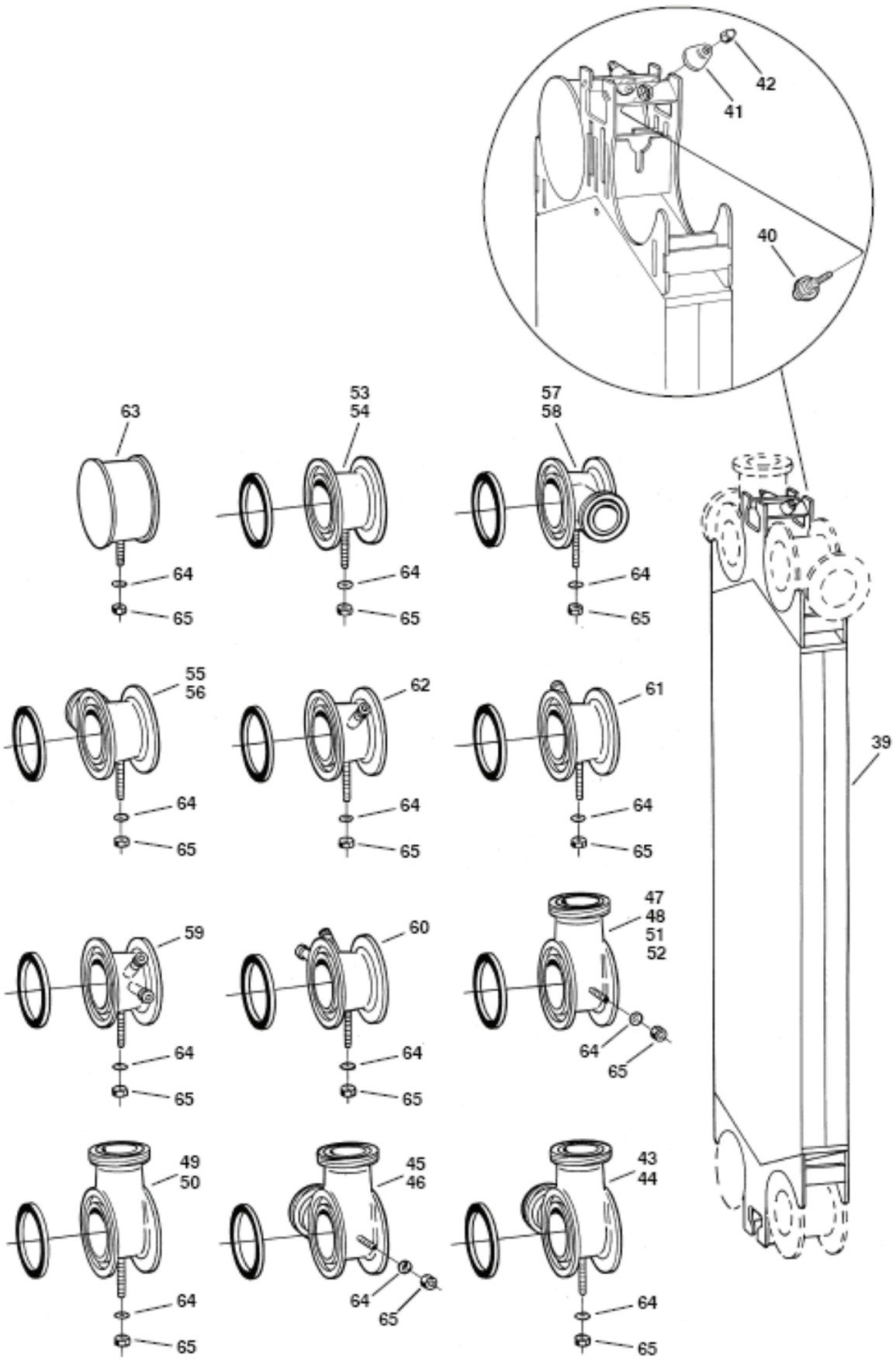
42
41
40
63
53
54
57
58
64
65
55
56
62
61
39
59
60
47
48
51
52
49
50
45
46
43
44

Table 10. Connection plate

Pos. no.	Part number	Name	Comments
39	164073301	Connection plate	
40	164038602	Bolt	
41	164184901	Dished washer	
42	164038701	Acron nut	
43	164186201	Double corner, 100 mm conn.	Position A-1 and A-3
	164186203	Double corner, 76 mm conn.	Position A-1 and A-3
44	164186205	Double corner, 3A 100 mm conn. Position A-1 and A-3	Position A-1 and A-3
	164186207	Double corner, 3A 76 mm conn. Position A-1 and A-3	Position A-1 and A-3
45	164186202	Double corner, 100 mm conn.	Position A-2 and A-4
	164186204	Double corner, 76 mm conn.	Position A-2 and A-4
46	164186206	Double corner, 3A 100 mm conn. Position A-2 and A-4	Position A-2 and A-4
	164186208	Double corner, ,3A 76 mm conn. Position A-2 and A-4	Position A-2 and A-4
47	164186101	Single corner,100 mm conn.	Vertical pos. A-1 and A-3 if botttom towards frame plate, otherwise A-2 and A-4
	164186104	Single corner, 76 mm conn.	Vertical pos. A-1 and A-3 if botttom towards frame plate, otherwise A-2 and A-4
48	164186107	Single corner, 3A 100 mm conn.	Vertical pos. A-1 and A-3 if botttom towards frame plate, otherwise A-2 and A-4
	164186110	Single corner, 3A 76 mm conn.	Vertical pos. A-1 and A-3 if botttom towards frame plate, otherwise A-2 and A-4
49	164186102	Single corner,100 mm conn.	Horizontal all positions
	164186105	Single corner, 76 mm conn.	Horizontal all positions
50	164186108	Single corner, 3A 100 mm conn.	Horizontal all positions
	164186111	Single corner, 3A 76 mm conn.	Horizontal all positions
51	164186103	Single corner,100 mm conn.	Vertical pos. A-2 and A-4 if botttom towards frame plate, otherwise A-1 and A-3
	164186106	Single corner, 76 mm conn.	Vertical pos. A-2 and A-4 if botttom towards frame plate, otherwise A-1 and A-3
52	164186109	Single corner, 3A 100 mm conn.	Vertical pos. A-2 and A-4 if botttom towards frame plate, otherwise A-1 and A-3
	164186112	Single corner, 3A 76 mm conn.	Vertical pos. A-2 and A-4 if botttom towards frame plate, otherwise A-1 and A-3
53	162537801	Through passage	
54	162537802	Through passage, 3A	
55	164186301	Through passage	With 2” connection, position A-1 and A-3
56	164186303	Through passage, 3A	With 2” connection, position A-1 and A-3
57	164186302	Through passage	With 2” connection, position A-2 and A-4
58	164186304	Through passage, 3A	With 2” connection, position A-2 and A-4
59	164186501	Through passage	With dive tube and nib, position A-1
60	164186502	Through passage	With dive tube and nib, position A-4
61	164186401	Through passage	With dive tube, position A-1 and A-3
62	164186402	Through passage	With dive tube, position A-2 and A-4
63	162536801	Blind corner	
64	22310161	Washer	BRB 10.5x22
65	22180329	Nut	M6M 10

Note!

Nipples not included for single and double corner.

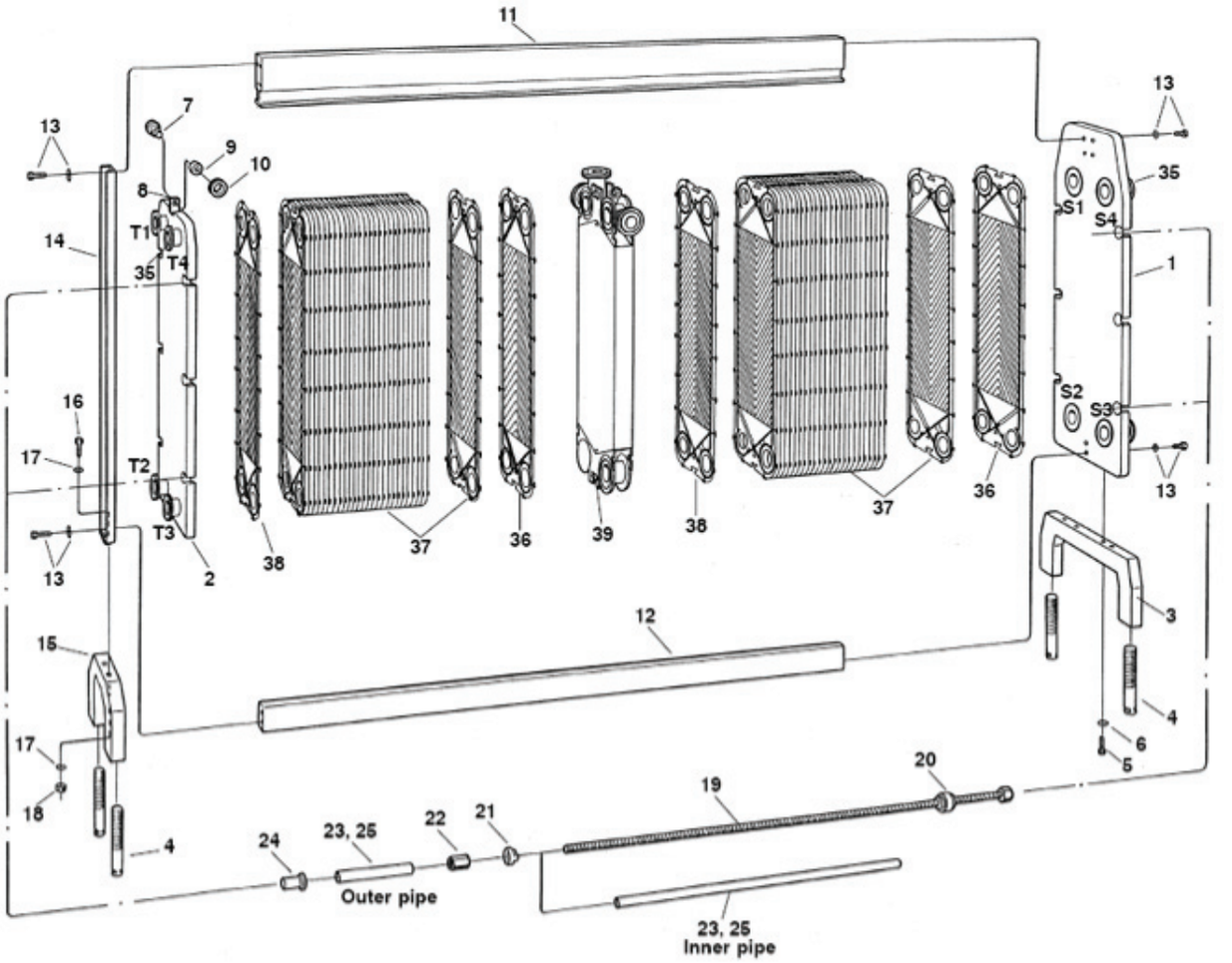
11
13
7
9
10
8
T1
T4
35
14
16
17
T2
T3
13
2
38
37
36
39
38
37
36
13
35
S1
S4
1
S2
S3
13
3
12
15
4
17
18
4
24
23, 25
Outer pipe
22
21
19
20
6
5
23, 25
Inner pipe

Pos. no. 1 Frame plate					Pos. no. 2 Pressure plate				
Part number	Hole				Part number	Hole			
	S1	S2	S3	S4		T1	T2	T3	T4
164088901	X	X	X	X	164089201	X	X	X	X
164088902	X	X	X		164089202	X	X	X	
164088903		X	X	X	164089203		X	X	X
164088904	X		X	X	164089204	X		X	X
164088905	X	X		X	164089205	X	X		X
164088906	X	X			164089206	X	X		
164088907	X		X		164089207	X		X	
164088908	X			X	164089208	X			X
164088909		X	X		164089209		X	X	
164088910		X		X	164089210		X		X
164088911			X	X	164089211			X	X
164088912	X				164089212	X			
164088913		X			164089213		X		
164088914			X		164089214			X	
164088915				X	164089215				X
164088916					164089216				

Pos. no.	Part number	Name	Comments
3	164053901	Foot	Low
	164088401	Foot	High foot
4	164088502	Levelling screw	For low foot
	164088501	Levelling screw	For high foot
5	221046303	Screw	M6S 16x40
6	22310137	Washer	BRB 17x30
7	162078001	Shaft	
8	26008004	Stop screw	SK6SS 6x8
9	52840203	Needle bearing	NKI 20/16 INA
10	162078101	Wheel	

Pos. no. 11 Carrying bar	Pos. no. 12 Guiding bar	Length (mm)	* Max. no. of plates	
			0.5 mm	0.6 mm
162316901	3232340012	1200	124	122
162316902	3232340014	1800	212	209
162316903	3232340016	2400	299	295
162316904	3232340018	3000	387	381
162316905	3232340021	3600	474	468
162316906	3232340023	4200	562	554
162320301	3232340173	4800	600	600

Pos. no.	Part number	Name	Comments
13	164085810	Plastic bag	For bars ≤ 4200 mm
	164085811	Plastic bag	For bars > 4200 mm
14	164044802	Support column	
15	164044501	Foot	Low foot
	164055101	Foot	High foot
16	221046303	Screw	M6S 16x40
17	22310137	Washer	BRB 17x30
18	22180340	Nut	M16

Pos. no. 19 Tightening bolt / locking bolt M39	Length (mm)	* Max. no. of plates	
		0.5 mm	0.6 mm
162446201 / 162446201	1160 / 1160	124	122
162446203 / 162446202	1760 / 1460	212	209
162446205 / 162446204	2360 / 2060	299	295
162446206 / 162446205	2960 / 2360	387	381
162446207 / 162446206	3560 / 2960	474	468
162446208 / 162446207	4160 / 3560	562	554
162446209/ 162446208	4760 / 4160	600	600

Pos. no.	Part number	Name
20	162416101	Bearing box
21	3232429151	Lock washer
22	164166901	Nut

Pos. no. 23 Protecting pipe	Length mm		Length bolt (mm)	* Max. no. of plates	
		Inner pipe		0.5 mm	0.6 mm
164135901	915		1160	124	122
164135902	1215		1460	212	209
164135903	1515		1760	212	209
164135904	1815		2060	299	295
164135905	2115	A + 89	2360	387	381
164135906	2715		2960	387	381
164135907	3315		3560	474	468
164135908	3915		4160	474	468
164135909	4515		4760	562	554

Pos. no.	Part number	Name
24	164136005	Cap
25	1995101093	Plastic tube
26	162537002	Blind connection
35		Connection
36		End
37		Channel plates
38		End plate II
39		Connection plate

* When conn. plates: Reduce max. no. of plates with 15 plates / conn. plate.

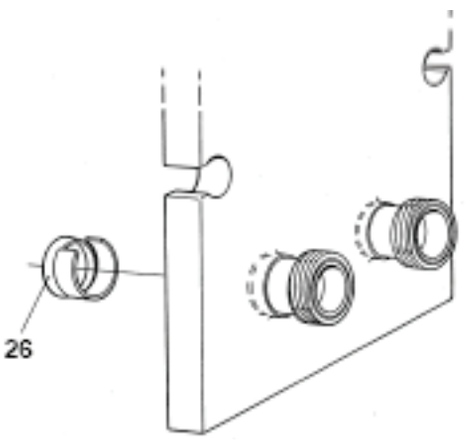

Table 11. Connection plate

Pos. no.	Part number	Name	Comments
39	164073301	Connection plate	
40	164038602	Bolt	
41	164184901	Dished washer	
42	164038701	Acron nut	
43	164186201	Double corner, 100 mm conn.	Position A-1 and A-3
	164186203	Double corner, 76 mm conn.	Position A-1 and A-3
44	164186205	Double corner, 3A 100 mm conn. Position A-1 and A-3	Position A-1 and A-3
	164186207	Double corner, 3A 76 mm conn. Position A-1 and A-3	Position A-1 and A-3
45	164186202	Double corner, 100 mm conn.	Position A-2 and A-4
	164186204	Double corner, 76 mm conn.	Position A-2 and A-4
46	164186206	Double corner, 3A 100 mm conn. Position A-2 and A-4	Position A-2 and A-4
	164186208	Double corner, ,3A 76 mm conn. Position A-2 and A-4	Position A-2 and A-4
47	164186101	Single corner, 100 mm conn.	Vertical pos. A-1 and A-3 if botttom towards frame plate, otherwise A-2 and A-4
	164186104	Single corner, 76 mm conn.	Vertical pos. A-1 and A-3 if botttom towards frame plate, otherwise A-2 and A-4
48	164186107	Single corner, 3A 100 mm conn.	Vertical pos. A-1 and A-3 if botttom towards frame plate, otherwise A-2 and A-4
	164186110	Single corner, 3A 76 mm conn.	Vertical pos. A-1 and A-3 if botttom towards frame plate, otherwise A-2 and A-4
49	164186102	Single corner, 100 mm conn.	Horizontal all positions
	164186105	Single corner, 76 mm conn.	Horizontal all positions
50	164186108	Single corner, 3A 100 mm conn.	Horizontal all positions
	164186111	Single corner, 3A 76 mm conn.	Horizontal all positions
51	164186103	Single corner, 100 mm conn.	Vertical pos. A-2 and A-4 if botttom towards frame plate, otherwise A-1 and A-3
	164186106	Single corner, 76 mm conn.	Vertical pos. A-2 and A-4 if botttom towards frame plate, otherwise A-1 and A-3
52	164186109	Single corner, 3A 100 mm conn.	Vertical pos. A-2 and A-4 if botttom towards frame plate, otherwise A-1 and A-3
	164186112	Single corner, 3A 76 mm conn.	Vertical pos. A-2 and A-4 if botttom towards frame plate, otherwise A-1 and A-3
53	162537801	Through passage	
54	162537802	Through passage, 3A	
55	164186301	Through passage	With 2” connection, position A-1 and A-3
56	164186303	Through passage, 3A	With 2” connection, position A-1 and A-3
57	164186302	Through passage	With 2” connection, position A-2 and A-4
58	164186304	Through passage, 3A	With 2” connection, position A-2 and A-4
59	164186501	Through passage	With dive tube and nib, position A-1
60	164186502	Through passage	With dive tube and nib, position A-4
61	164186401	Through passage	With dive tube, position A-1 and A-3
62	164186402	Through passage	With dive tube, position A-2 and A-4
63	162536801	Blind corner	
64	22310161	Washer	BRB 10.5x22
65	22180329	Nut	M6M 10

Note!
Nipples not included for single and double corner.

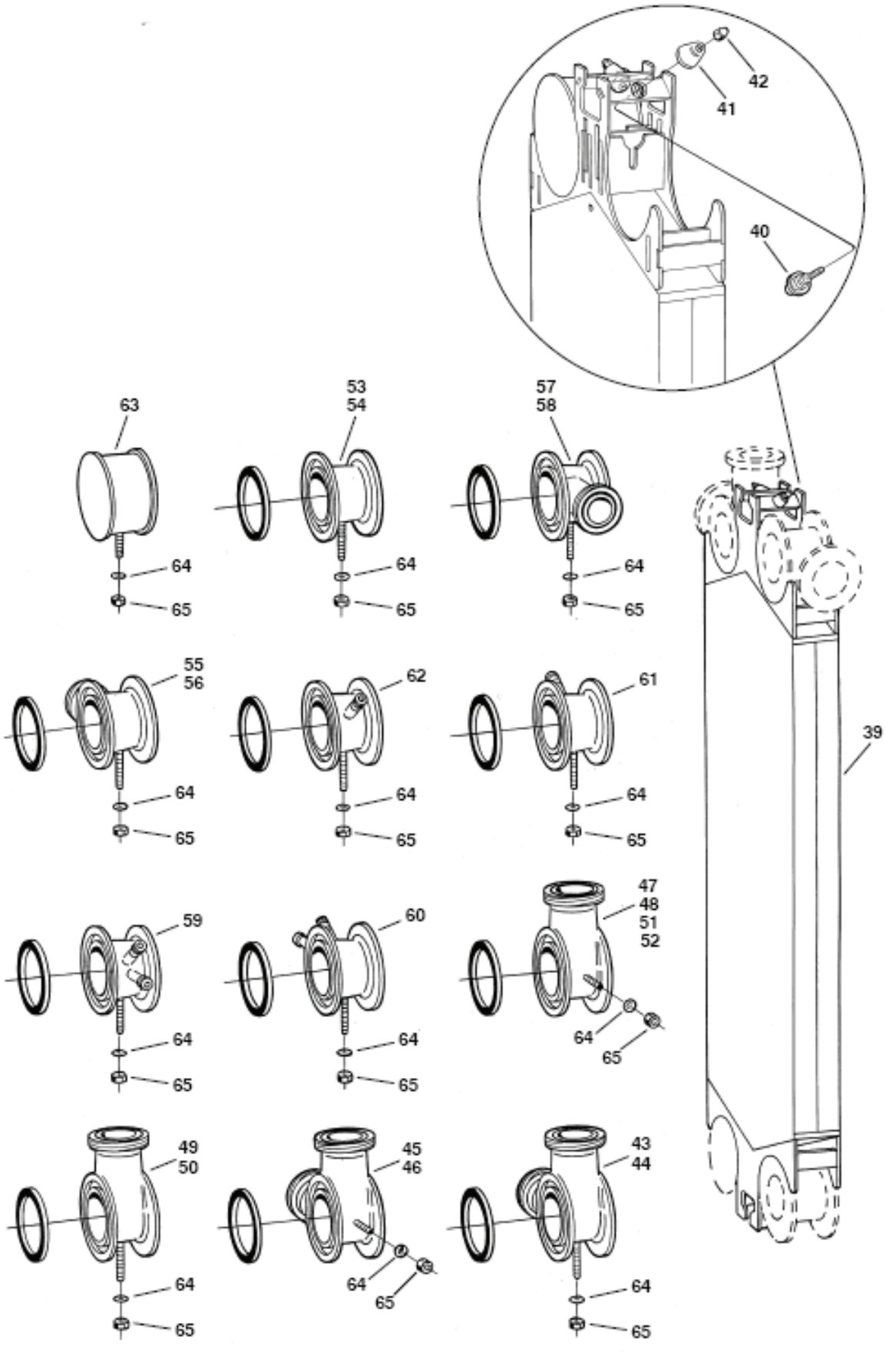
42
41
40
63
53
54
57
58
64
65
55
56
62
61
39
59
60
47
48
51
52
49
50
45
46
43
44

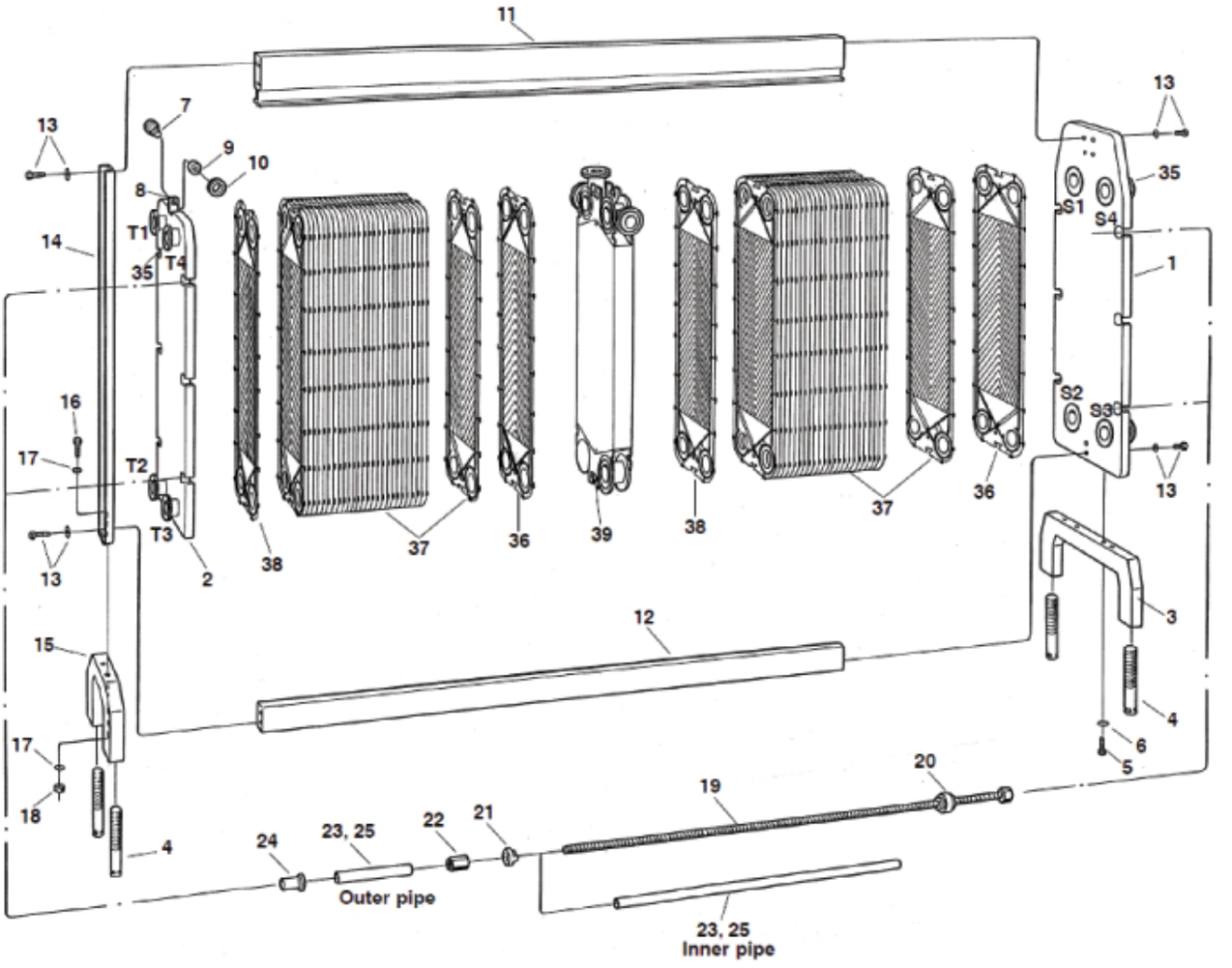
11
13
7
9
10
8
T1
T4
35
14
16
17
T2
T3
13
2
38
37
36
39
38
37
36
13
35
S1
S4
1
S2
S3
13
3
4
6
5
12
15
17
18
4
24
23, 25
22
21
19
20
Outer pipe
23, 25
Inner pipe

Pos. no. 1 Frame plate					Pos. no. 2 Pressure plate				
Part number	Hole				Part number	Hole			
	S1	S2	S3	S4		T1	T2	T3	T4
164089001	X	X	X	X	164089301	X	X	X	X
164089002	X	X	X		164089302	X	X	X	
164089003		X	X	X	164089303		X	X	X
164089004	X		X	X	164089304	X		X	X
164089005	X	X		X	164089305	X	X		X
164089006	X	X			164089306	X	X		
164089007	X		X		164089307	X		X	
164089008	X			X	164089308	X			X
164089009		X	X		164089309		X	X	
164089010		X		X	164089310		X		X
164089011			X	X	164089311			X	X
164089012	X				164089312	X			
164089013		X			164089313		X		
164089014			X		164089314			X	
164089015				X	164089315				X
164089016					164089316				

Pos. no.	Part number	Name	Comments
3	164053901	Foot	Low
	164088401	Foot	High foot
4	164088502	Levelling screw	For low foot
	164088501	Levelling screw	For high foot
5	221046303	Screw	M6S 16x40
6	22310137	Washer	BRB 17x30
7	162078001	Shaft	
8	26008004	Stop screw	SK6SS 6x8
9	52840203	Needle bearing	NKI 20/16 INA
10	162078101	Wheel	

Pos. no. 11 Carrying bar	Pos. no.12 Guiding bar	Length (mm)	* Max. no. of plates
			0.6mm
162316901	3232340012	1200	122
162316902	3232340014	1800	209
162316903	3232340016	2400	295
162316904	3232340018	3000	381
162316905	3232340021	3600	468
162316906	3232340023	4200	554
162320301	3232340173	4800	600

Pos. no.	Part number	Name	Comments
13	164085812	Plastic bag	For bars ≤ 4200 mm
	164085813	Plastic bag	For bars > 4200 mm
14	164044802	Support column	
15	164044501	Foot	Low foot
	164055101	Foot	High foot
16	221046303	Screw	M6S 16x40
17	22310137	Washer	BRB 17x30
18	22180340	Nut	M16

Pos. no. 19 Tightening bolt / locking bolt M39	Length (mm)	* Max. no. of plates 0.6 mm
162446201 / 162446201	1160 / 1160	122
162446203 / 162446202	1760 / 1460	209
162446205 / 162446204	2360 / 2060	295
162446206 / 162446205	2960 / 2360	381
162446207 / 162446206	3560 / 2960	468
162446208 / 162446207	4160 / 3560	554
162446209/ 162446208	4760 / 4160	600

Pos. no.	Part number	Name
20	162416101	Bearing box
21	3232429151	Lock washer
22	164166901	Nut

Pos. no. 23 Protecting pipe	Length (mm)		Length bolt (mm)	* Max. no. of plates
		Inner pipe		0.6 mm
164135901	915		1160	122
164135902	1215		1460	209
164135903	1515		1760	209
164135904	1815		2060	295
164135905	2115	A + 109	2360	381
164135906	2715		2960	381
164135907	3315		3560	468
164135908	3915		4160	468
164135909	4515		4760	554

Pos. no.	Part number	Name
24	164136005	Cap
25	1995101093	Plastic tube
26	162537002	Blind connection
35		Connection
36		End
37		Channel plates
38		End plate II
39		Connection plate

* When conn. plates: Reduce max. no. of plates with 15 plates / conn. plate.

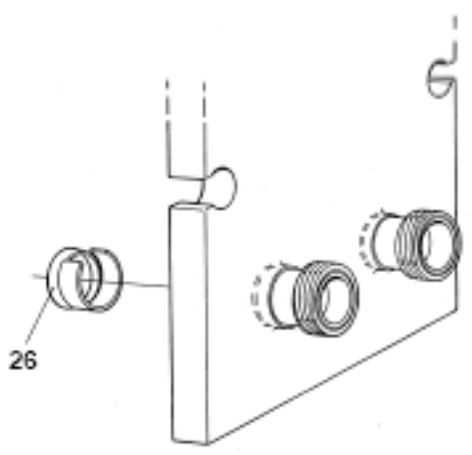

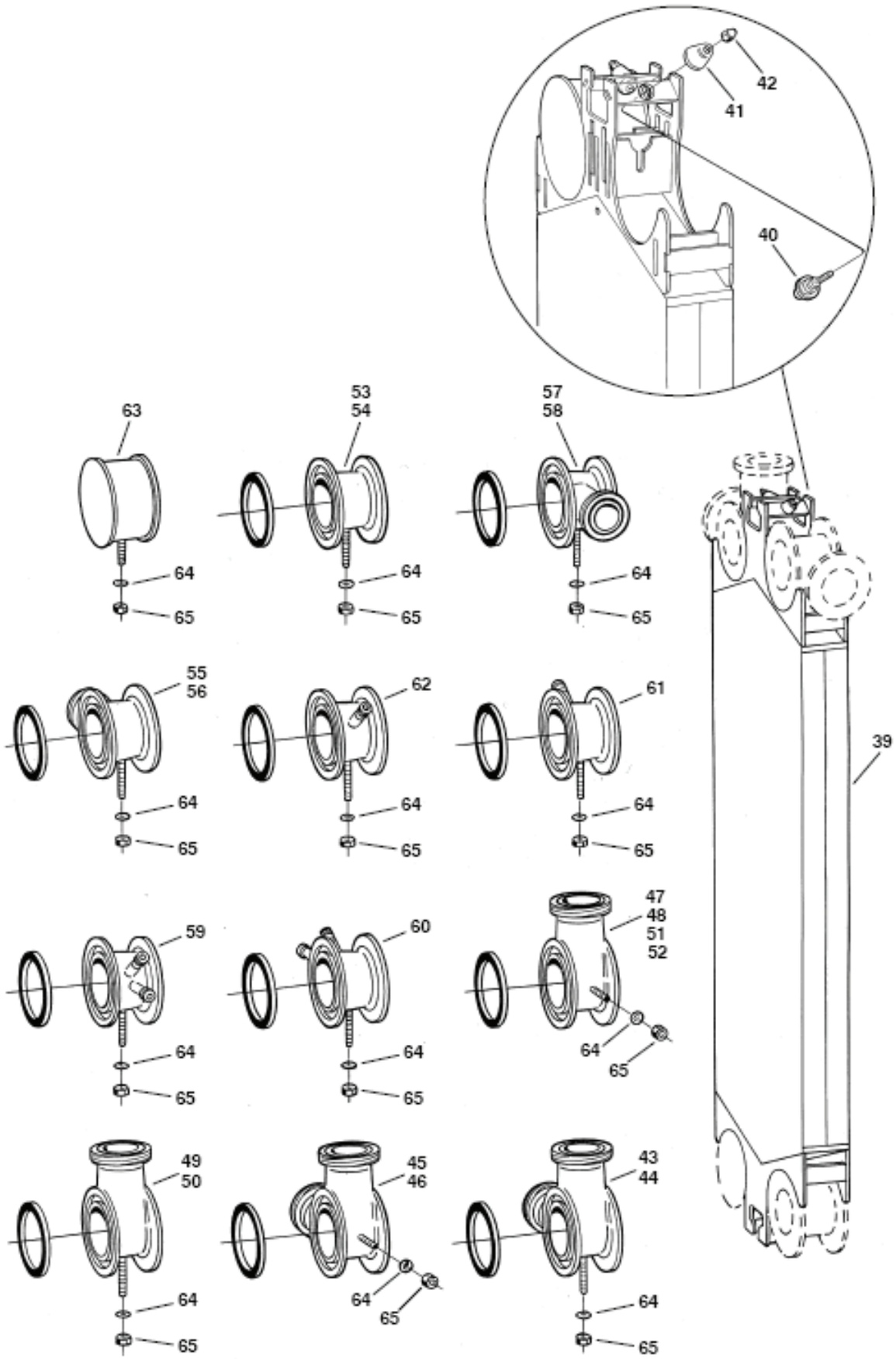
42
41
40
63
53
54
57
58
64
65
55
56
62
61
39
59
60
47
48
51
52
49
50
45
46
43
44

Pos. no.	Part number	Name	Comments
39	164073301	Connection plate	
40	164038602	Bolt	
41	164184901	Dished washer	
42	164038701	Acron nut	
43	164186201	Double corner, 100 mm conn.	Position A-1 and A-3
	164186203	Double corner, 76 mm conn.	Position A-1 and A-3
44	164186205	Double corner, 3A 100 mm conn. Position A-1 and A-3	Position A-1 and A-3
	164186207	Double corner, 3A 76 mm conn. Position A-1 and A-3	Position A-1 and A-3
45	164186202	Double corner, 100 mm conn.	Position A-2 and A-4
	164186204	Double corner, 76 mm conn.	Position A-2 and A-4
46	164186206	Double corner, 3A 100 mm conn. Position A-2 and A-4	Position A-2 and A-4
	164186208	Double corner, 3A 76 mm conn. Position A-2 and A-4	Position A-2 and A-4
47	164186101	Single corner,100 mm conn.	Vertical pos. A-1 and A-3 if botttom towards frame plate, otherwise A-2 and A-4
	164186104	Single corner, 76 mm conn.	Vertical pos. A-1 and A-3 if botttom towards frame plate, otherwise A-2 and A-4
48	164186107	Single corner, 3A 100 mm conn.	Vertical pos. A-1 and A-3 if botttom towards frame plate, otherwise A-2 and A-4
	164186110	Single corner, 3A 76 mm conn.	Vertical pos. A-1 and A-3 if botttom towards frame plate, otherwise A-2 and A-4
49	164186102	Single corner,100 mm conn.	Horizontal all positions
	164186105	Single corner, 76 mm conn.	Horizontal all positions
50	164186108	Single corner, 3A 100 mm conn.	Horizontal all positions
	164186111	Single corner, 3A 76 mm conn.	Horizontal all positions
51	164186103	Single corner, 100 mm conn.	Vertical pos. A-2 and A-4 if botttom towards frame plate, otherwise A-1 and A-3
	164186106	Single corner, 76 mm conn.	Vertical pos. A-2 and A-4 if botttom towards frame plate, otherwise A-1 and A-3
52	164186109	Single corner, 3A 100 mm conn.	Vertical pos. A-2 and A-4 if botttom towards frame plate, otherwise A-1 and A-3
	164186112	Single corner, 3A 76 mm conn.	Vertical pos. A-2 and A-4 if botttom towards frame plate, otherwise A-1 and A-3
53	162537801	Through passage	
54	162537802	Through passage, 3A	
55	164186301	Through passage	With 2” connection, position A-1 and A-3
56	164186303	Through passage, 3A	With 2” connection, position A-1 and A-3
57	164186302	Through passage	With 2” connection, position A-2 and A-4
58	164186304	Through passage, 3A	With 2” connection, position A-2 and A-4
59	164186501	Through passage	With dive tube and nib, position A-1
60	164186502	Through passage	With dive tube and nib, position A-4
61	164186401	Through passage	With dive tube, position A-1 and A-3
62	164186402	Through passage	With dive tube, position A-2 and A-4
63	162536801	Blind corner	
64	22310161	Washer	BRB 10.5x22
65	22180329	Nut	M6M 10

Note!
Nipples not included for single and double corner.

Spare Parts Lists Fusion8 RM-

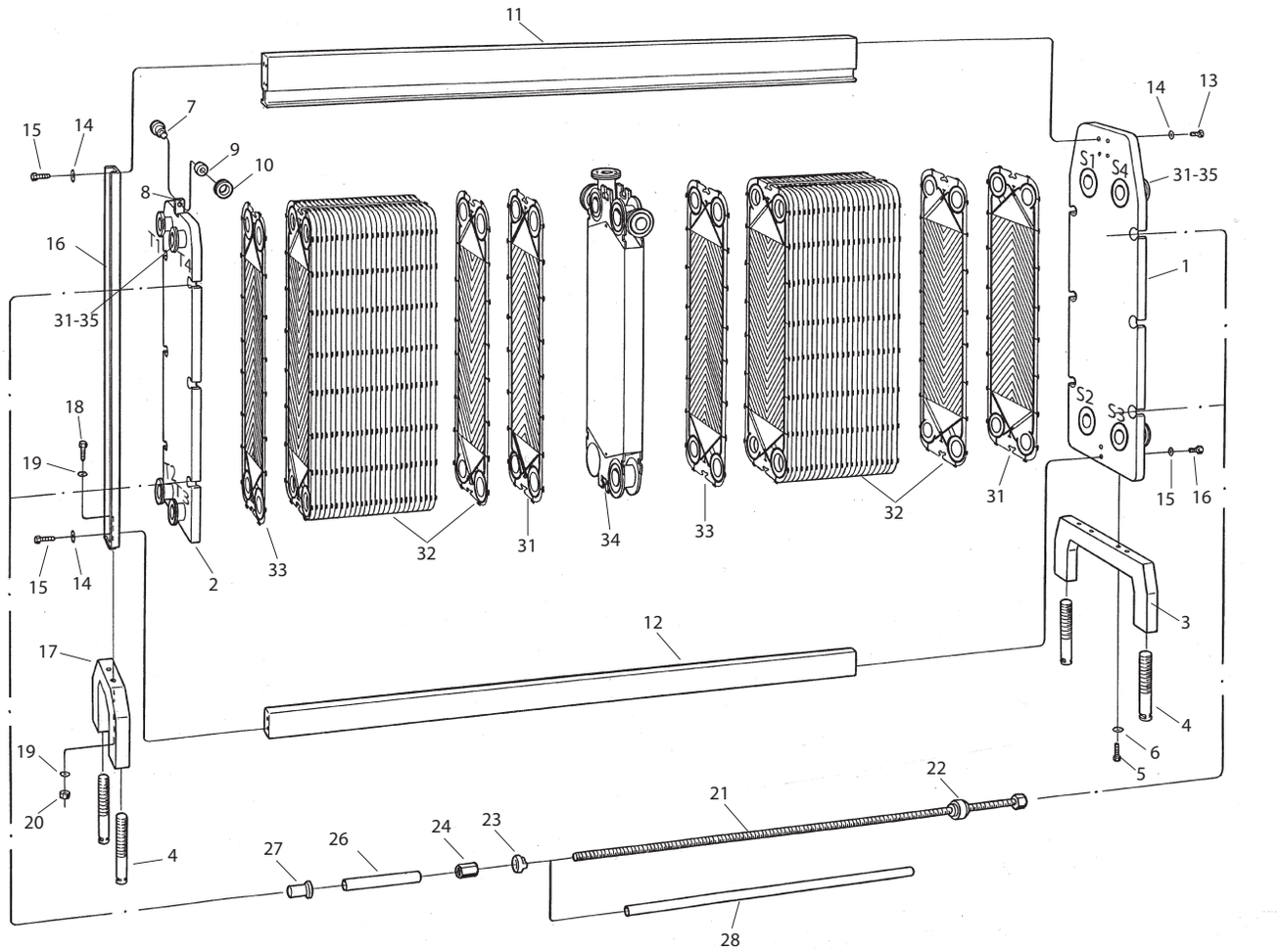

Fusion8–RM, exploded view
3

Frame components

Pos	*Denomination*	*AlfaLaval Part No*	*Specification*	*Comments*
1	Frame plate	3350008332	4H, cladded	CE
		3350008335	S1+S4, cladded	CE
		3350008338	S2+S3, cladded	CE
		3350000696	4H COMPLETE	ALS
		3350000697	S1, S4 COMPLETE	ALS
		3350000698	S2, S3 COMPLETE	ALS
2	Pressure Plate	3350000727	Unholed COMPLETE	CE
		3350008343	4H, cladded	CE
		3350008346	T1+T4, cladded	CE
		3350008349	T2+T3, cladded	CE
		3350000728	Unholed COMPLETE	ALS
		3350000732	4H COMPLETE	ALS
		3350000733	T1, T4 COMPLETE	ALS
		3350000734	T2, T3 COMPLETE	ALS
3	Foot	3350000605	COMPLETE	
		3350000610	COMPLETE	
4	Levelling screw	1640885-01	L=280, For Low Foot	
		1640885-02	L=230, M39	
5	Screw	2210463-03	M16x40 2343	
6	Washer	233101-37	BRB 17x30 2343	
7	Shaft	162080-01		

8	Stop screw	260080-04	M6x8-A4	
9	Needle bearing	52-8402-03	NKI 20/16 INA	
10	Wheel	1620781-01		
11	Carrying bar	1623150-01	Cpl, LC=1200	
		1623150-02	Cpl, LC=1800	
		1623150-03	Cpl, LC=2400	
		1623150-04	Cpl, LC=3000	
		1623150-05	Cpl, LC=3600	
		1623150-06	Cpl, LC=spec	
		34508664-01	LC=1200 Complete	
		34508664-02	LC=1800 Complete	
		34508664-03	LC=2400 Complete	
		34508664-04	LC=3000 Complete	
		34508664-05	LC=3600 Complete	
		34508664-06	LC=SPEC. Complete	
12	Guiding bar	32323-4001-2	L=1200	
		32323-4001-4	L=1800	
		32323-4001-6	L=2400	
		32323-4001-8	L=3000	
		32323-4002-1	L=3600	
		32323-4002-2	L ACC. TO MTRL SPEC.	
13	Screw	221046-38	M12x80 2343	
		221046-22	M12x35 2343	
14	Washer	223101-35	BRB13x24 2343	
15	Screw	1640848-01	L=200 M30	
		1640848-02	L=250 M30	
		221046-38	ISO 4017 - M12 x 80 - A4-70	
16	Supporting column	3350000815	COMPLETE	
		3350000817	COMPLETE	
		1640448-01	CLIP 8	
17	FOOT	1640548-01		
		1640551-01		
18	Washer	223101-37	BRB17x30 2343	
19	Screw	2210463-02	M16x30 2343	
		2210463-03	M16x40 2343	
20	Nut	221803-40	M16 2343	
21	Tightening bolt	1624463-03	L=1160	ALS-1, ALS, CE, ALS-2
		1624463-04	L=1460	ALS, CE
		1624463-05	L=1760	ALS-1, ALS, CE, ALS-2
		1624463-06	L=2060	ALS, CE
		1624463-07	L=2360	ALS-1, ALS, CE, ALS-2
		1624463-08	L=2960	ALS-1, ALS, CE, ALS-2
		1624463-09	L=3560	ALS-1, ALS, CE, ALS-2
		1624463-10	L=L1	ALS, CE
22	Bearing box	1624157-01		ALS-1, ALS, CE, ALS-2
23	Lock washer	32234-4897-1		ALS-1, ALS, CE, ALS-2
24	Nut	1641668-03	L=105 mm	ALS-1, ALS, CE, ALS-2
25	Spanner	32220-3101-5	"M30,1 1/8"""	ALS-1, ALS, CE, ALS-2
26	Protecting tube	1641358-03	L=964	ALS, CE
		1641358-04	L=1264	ALS, CE
		1641358-05	L=1564	ALS, CE
		1641358-06	L=1864	ALS, CE
		1641358-07	L=2164	ALS, CE
		1641358-08	L=2764	ALS, CE
		1641358-09	L=3364	ALS, CE
		1641358-10	L=L1-196	ALS, CE
27	Cap	1641360-04	M30	ALS, CE
		3350000888	SEAL PLUG Ø76,1 CONNECTION	CE
		3350000889	SEAL PLUG, DØ80	CE
		3350001190	SEAL PLUG	
28	Plastic tube	1995-101-092	34/32,LDPE,GREY	ALS-1, ALS, CE, ALS-2
29	Protecting sheet	3350001168	Top sheet	
		3350001169	Top sheet shoulder	
		3350001170	Middle sheet	
		3350001171	Bottom sheet right	
		3350001172	Bottom sheet left	
30	Gasket ring	3350000890	O-ring 73,03 x 3,53 EPDM 70	ALS
31	Connection frame plate	3350000198	316L	ALS
		3350000774	316L divided	ALS
32	Connection pressure plate	3350000775	316L divided	ALS
		3350000582	316L	ALS
33	Connection	34504429-01		ALS
		3350000887	TUBE Ø76,1	ALS
		1626363-02	DIN DN80/PN16	ALS, CE
		32324-7483-1	Tube, Ø76.1	CE
34	Flange	3350008341	On FP, with groove	CE
		3350008342	On PP, without groove	CE
35	Fittings	1644793-05	SMS 76 MALE PART	ALS, CE
		1644799-05	IDF 76 MALE PART	ALS, CE

		1644802-05	RJT 76 MALE PART	ALS, CE
		1644805-03	CLAMP 51 NIPPLE	ALS, CE
		1644805-05	CLAMP 76 NIPPLE	ALS, CE
		34503161-01	Inside tappered	ALS, CE
		34503624-01		ALS, CE
36	Partition plate	3350008131	2 holes hor, SS	

Connections

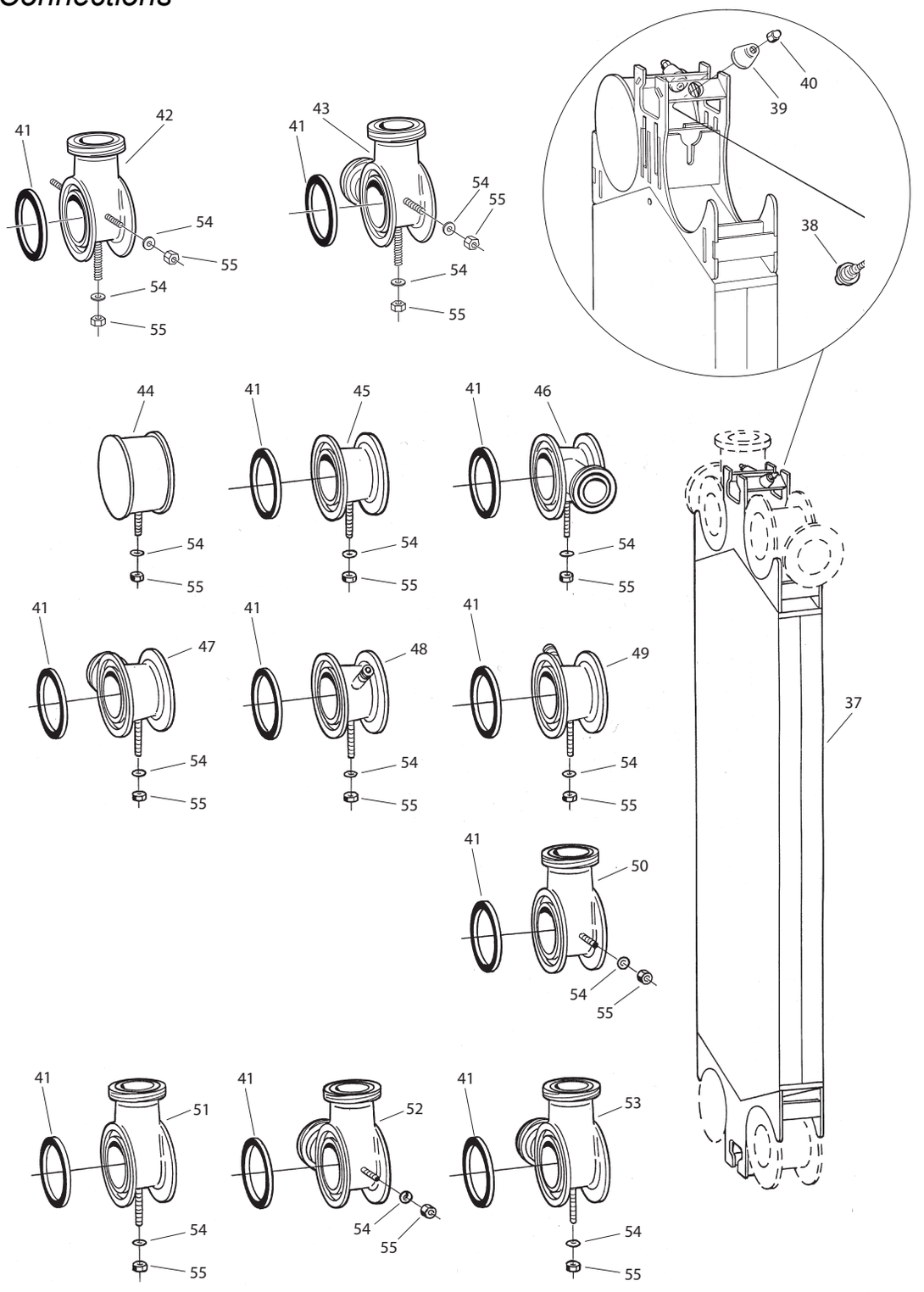

Connection plates

Pos	*Denomination*	*AlfaLaval Part No*	*Specification*	*Comments*
37	Connection plate	3350015360	CONNECTION PLATE COMPLETE	ALS, CE
		3350015361	Bracket x 8 pcs	Plate/bolt holder
		2210463–22	Screw x 16 pcs	Plate/bolt holder
		70490	Washer x 16 pcs	Plate/bolt holder
		3350015686	Locking nut x 8 pcs	Plate/bolt holder
		32239–1145–1	Wearing washer x 8 pcs	Plate/bolt holder
38	Bolt	1624196-03		
		1640386-01		

39	Dished washer	1640385-01		
40	Acron nut	1640387-01		
41	Gasket	34505263-02	EPDMFF, Article replaces art.no. 32264-1607-8	
		34505263-01	NBRFF, Article replaces art.no. 1629508-01, 32264-1609-6	
42	Single corner	34504415-02		ALS, CE
		34504415-01		ALS, CE
		34504415-03		ALS, CE
		1640869-02		ALS, CE
43	Double corner	34504416-01		ALS, CE
		34504416-02		ALS, CE
44	Blind corner	3350009767	Blind corner with lining	ALS, CE
		1625304-04		ALS, CE
45	Through passage	1625318-01		
		1625318-02	3–A sanitary std	
46	Single corner	1640864-02	with 2” connection position A-21 and A-4	
		1640864-04	with 2” connection 3–A Sanitary std.position A-2 and A-4	
47	Single corner	1640864-01	with 2” connection position A-1 and A-3	
		1640864-03	with 2” connection 3–A Sanitary std. position A-1 and A-3	
48	Through passage	1640865-04	with dive tube position A-2 and A-4	
49	Through passage	1640865-03	with dive tube position A-1 and A-3	
50	Single corner	1640866-01	vertical position A-1, A-3 if bottom towards fram plate, otherwise A-2, A-4	
		1640866-03	vertical position A-2, A-4 if bottom towards fram plate, otherwise A-1, A-3	
		1640866-06	3–A sanitary std, Vertical position A-1, A-3 if bottom towards frame plate, otherwise A-2, A-4	
		1640866-08	3–A sanitary std, Vertical position A-2, A-4 if bottom towards frame plate, otherwise A-1, A-3	
51	Single corner	1640866-02	horizontal all positions	
		1640866-07	3–A sanitary std. Horizontal all positions	
52	Single corner	1640867-02		ALS, CE
		1640867-07		ALS, CE
53	Double corner	1640867-02	Position A-2 and A-4	
		1640867-08	3–A sanitary std. position A-2 and A-4	
54	Washer	223201-61	BRB10,5x22 2343	
55	Nut	221803-29	M10 2343	
56	Bolt	1624196-03		

Blind Connection

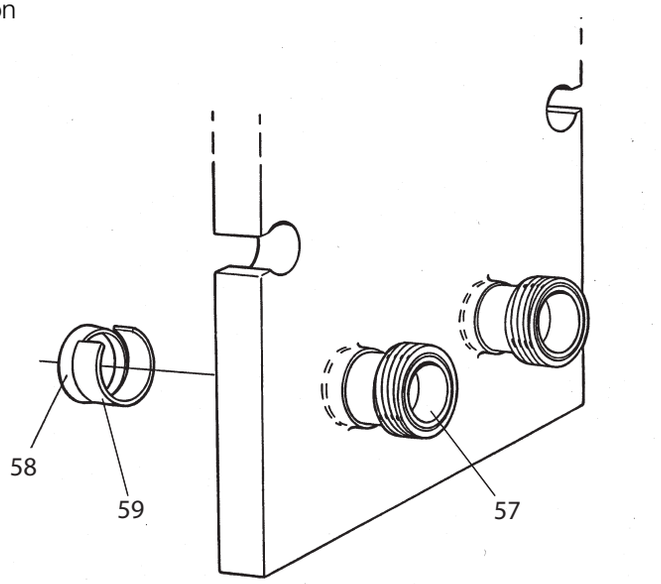

Drawing of blind connection.

Pos	*Denomination*	*AlfaLaval Part No*	*Specification*	*Comments*
57	Blind connection	1625308-02		CE
58	Blind washer	3350008455	Without connection	CE
		3350000864		ALS
		3350000865	FP	ALS
		3350000866	PP	ALS
59	Spring	32324-7909-2		CE

Spare Parts Lists Fusion8 RH-

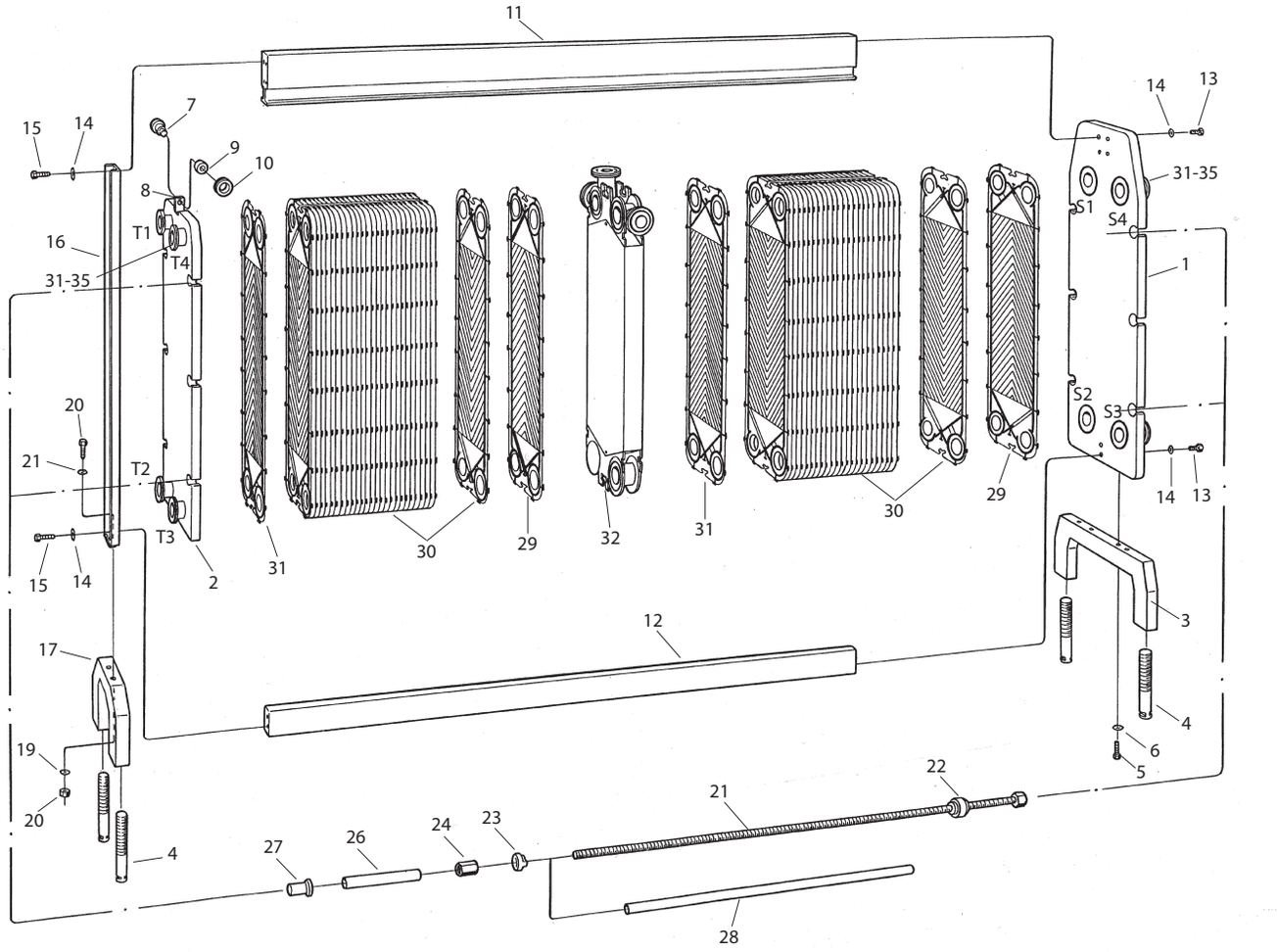

Fusion8–RH, exploded view
3

Frame components

Pos	*Denomination*	*AlfaLaval Part No*	*Specification*	*Comments*
1	Frame plate	3350000696	4H COMPLETE	ALS
		3350000697	S1, S4 COMPLETE	ALS
		3350000698	S2, S3 COMPLETE	ALS
		3350008332	4H, cladded	CE
		3350008335	S1+S4, cladded	CE
		3350008338	S2+S3, cladded	CE
2	Pressure plate	3350000727	Unholed COMPLETE	CE
		3350000728	Unholed COMPLETE	ALS
		3350000732	4H COMPLETE	ALS
		3350000733	T1, T4 COMPLETE	ALS
		3350000734	T2, T3 COMPLETE	ALS
		3350008343	4H, cladded	CE
		3350008346	T1+T4, cladded	CE
		3350008349	T2+T3, cladded	CE
3	Foot	1640885-01	L=280, For Low Foot	
		1640885-02	L=230, M39	
		3350000605	COMPLETE	
		3350000610	COMPLETE	
4	Levelling screw	1640885-01	L=280, For Low Foot	
		1640885-02	L=230, M39	
5	Screw	2210463-03	M16x40 2343	
6	Washer	233101-37	BRB 17x30 2343	

7	Shaft	162080-01		
8	Stop screw	260080-04	M6x8-A4	
9	Needle bearing	52-8402-03	NKI 20/16 INA	
10	Wheel	1620781-01		
11	Carrying bar	1623150-01	Cpl, LC=1200	
		1623150-02	Cpl, LC=1800	
		1623150-03	Cpl, LC=2400	
		1623150-04	Cpl, LC=3000	
		1623150-05	Cpl, LC=3600	
		1623150-06	Cpl, LC=spec	
		34508664-01	LC=1200 Complete	
		34508664-02	LC=1800 Complete	
		34508664-03	LC=2400 Complete	
		34508664-04	LC=3000 Complete	
		34508664-05	LC=3600 Complete	
		34508664-06	LC=SPEC. Complete	
12	Guiding bar	32323-4001-2	L=1200	
		32323-4001-4	L=1800	
		32323-4001-6	L=2400	
		32323-4001-8	L=3000	
		32323-4002-1	L=3600	
		32323-4002-2	L ACC. TO MTRL SPEC.	
13	Screw	221046-38	M12x80 2343	
		221046-22	M12x35 2343	
14	Washer	223101-35	BRB13x24 2343	
15	Screw	1640848-01	L=200 M30	
		1640848-02	L=250 M30	
		221046-38	ISO 4017 - M12 x 80 - A4-70	
16	Supporting column	3350000815	COMPLETE	
		3350000817	COMPLETE	
		1640448-01	CLIP 8	
17	FOOT	1640548-01		
		1640551-01		
18	Screw	2210463-02	M16x30 2343	
		2210463-03	M16x40 2343	
19	Washer	223101-37	BRB17x30 2343	
20	Nut	221803-40	M16 2343	
		1640554-01		
21	Tightening bolt	1624463-03	L=1160	CE, ALS
		1624463-04	L=1460	CE, ALS
		1624463-05	L=1760	CE, ALS
		1624463-06	L=2060	CE, ALS
		1624463-07	L=2360	CE, ALS
		1624463-08	L=2960	CE, ALS
		1624463-09	L=3560	CE, ALS
		1624463-10	L=L1	CE, ALS
22	Bearing box	1624157-01		CE, ALS
23	Lock washer	32234-4897-1		CE, ALS
24	Nut	1641668-03	L=105 mm	CE, ALS
		1640444-01	M39	
25	Spanner	32220-3101-5	"M30,1 1/8"""	CE, ALS
26	Cap	1641360-04	M30	CE, ALS
		3350000888	SEAL PLUG Ø76,1 CONNECTION	CE, ALS
		3350000889	SEAL PLUG, DØ80	ALS
		3350001190	SEAL PLUG	
27	Protecting tube	1641358-03	L=964	CE, ALS
		1641358-04	L=1264	CE, ALS
		1641358-05	L=1564	CE, ALS
		1641358-06	L=1864	CE, ALS
		1641358-07	L=2164	CE, ALS
		1641358-08	L=2764	CE, ALS
		1641358-09	L=3364	CE, ALS
		1641358-10	L=L1-196	CE, ALS
28	Plastic tube	1995-101-092	34/32,LDPE,GREY	CE, ALS
29	Protecting sheet	3350001168	Top sheet	
		3350001169	Top sheet shoulder	
		3350001170	Middle sheet	
		3350001171	Bottom sheet right	
		3350001172	Bottom sheet left	
30	Gasket ring	3350000890	O-ring 73,03 x 3,53 EPDM 70	ALS
31	Connection frame plate	3350000774	316L divided	ALS
		3350000198	316L	ALS
32	Connection pressure plate	3350000582	316L	ALS
		3350000775	316L divided	ALS
33	Connection	1626363-02	DIN DN80/PN16	CE, ALS
		32324-7483-1	Tube, Ø76.1	CE
		3350000887	TUBE Ø76,1	ALS
		34504429-01		ALS
34	Flange	3350008341	On FP, with groove	CE
		3350008342	On PP, without groove	CE

35	Fittings	1644793-05	SMS 76 MALE PART	CE, ALS
		1644799-05	IDF 76 MALE PART	CE, ALS
		1644802-05	RJT 76 MALE PART	CE, ALS
		1644805-03	CLAMP 51 NIPPLE	CE, ALS
		1644805-05	CLAMP 76 NIPPLE	CE, ALS
		34503161-01	Inside tappered	CE, ALS
		34503624-01		CE, ALS
36	Partition plate	3350008131	2 holes hor, SS	

Connections

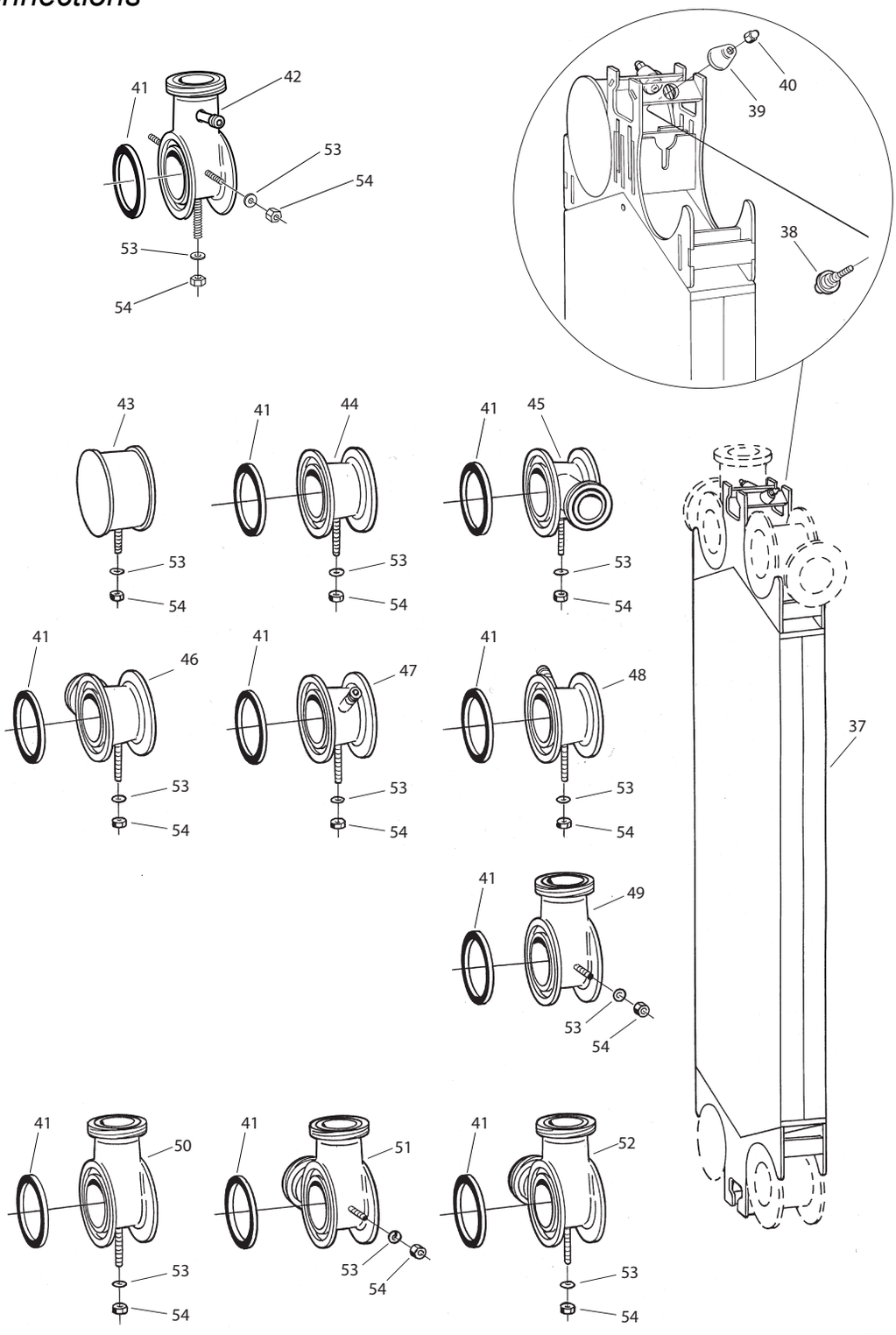

Connection plates

Pos	*Denomination*	*AlfaLaval Part No*	*Specification*	*Comments*
37	Connection plate	3350015360	CONNECTION PLATE COMPLETE	ALS, CE
		3350015361	Bracket x 8 pcs	Plate/bolt holder
		2210463–22	Screw x 16 pcs	Plate/bolt holder
		70490	Washer x 16 pcs	Plate/bolt holder
		3350015686	Locking nut x 8 pcs	Plate/bolt holder
		32239–1145–1	Wearing washer x 8 pcs	Plate/bolt holder
38	Bolt	1624196-03		
		1640386-01		

39	Dished washer	1640385-01	
40	Acron nut	1640387-01	
41	Gasket	34505263-02	EPDMFF, Article replaces art.no. 32264-1607-8
		34505263-01	NBRFF, Article replaces art.no. 1629508-01, 32264-1609-6
42	Single corner	1640869-02	
43	Blind corner	3350009767	Blind corner with lining
		1625304-04	
44	Through passage	1625318-01	
		1625318-02	3–A sanitary std
45	Single corner	1640864-02	with 2” connection position A-21 and A-4
		1640864-04	with 2” connection 3–A Sanitary std.position A-2 and A-4
46	Single corner	1640864-01	with 2” connection position A-1 and A-3
		1640864-03	with 2” connection 3–A Sanitary std. position A-1 and A-3
		34504415-03	
47	Through passage	1640865-03	with dive tube position A-1 and A-3
48	Through passage	1640865-04	with dive tube position A-2 and A-4
49	Single corner	1640866-01	vertical position A-1, A-3 if bottom towards fram plate, otherwise A-2, A-4
		1640866-03	vertical position A-2, A-4 if bottom towards fram plate, otherwise A-1, A-3
		1640866-06	3–A sanitary std, Vertical position A-1, A-3 if bottom towards frame plate, otherwise A-2, A-4
		1640866-08	3–A sanitary std, Vertical position A-2, A-4 if bottom towards frame plate, otherwise A-1, A-3
		34504415-01	
50	Single corner	1640866-02	horizontal all positions
		1640866-07	3–A sanitary std. Horizontal all positions
		34504415-02	
51	Double corner	1640867-02	Position A-2 and A-4
		1640867-08	3–A sanitary std. position A-2 and A-4
		34504416-01	
52	Double corner	1640867-01	Position A-1 and A-3
		1640867-07	3–A sanitary std. position A-1 and A-3
		34504416-02	
53	Washer	223201-61	BRB10,5x22 2343
54	Nut	221803-29	M10 2343
55	Bolt	1624196-03	

Blind Connection

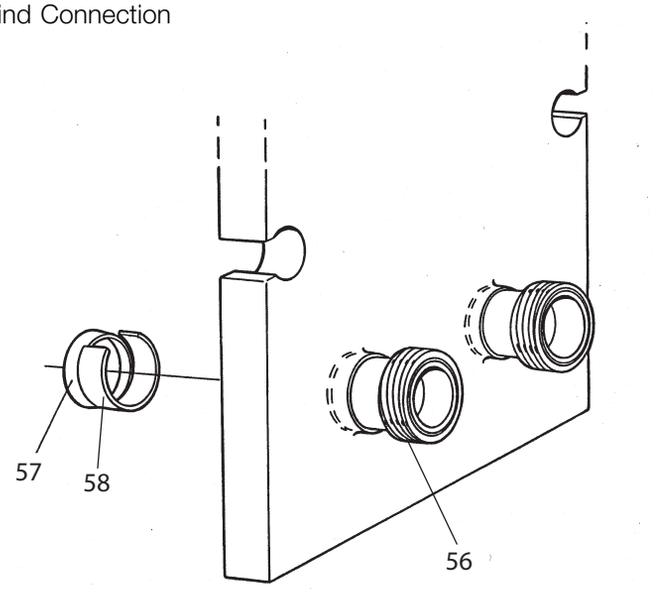

Drawing of blind connection.

Pos	*Denomination*	*AlfaLaval Part No*	*Specification*	*Comments*
56	Blind connection	1625308-02		CE
57	Blind washer	3350008455	Without connection	CE
		3350000864		ALS
		3350000865	FP	ALS
		3350000866	PP	ALS
58	Spring	32324-7909-2		CE

Not manufactured anymore

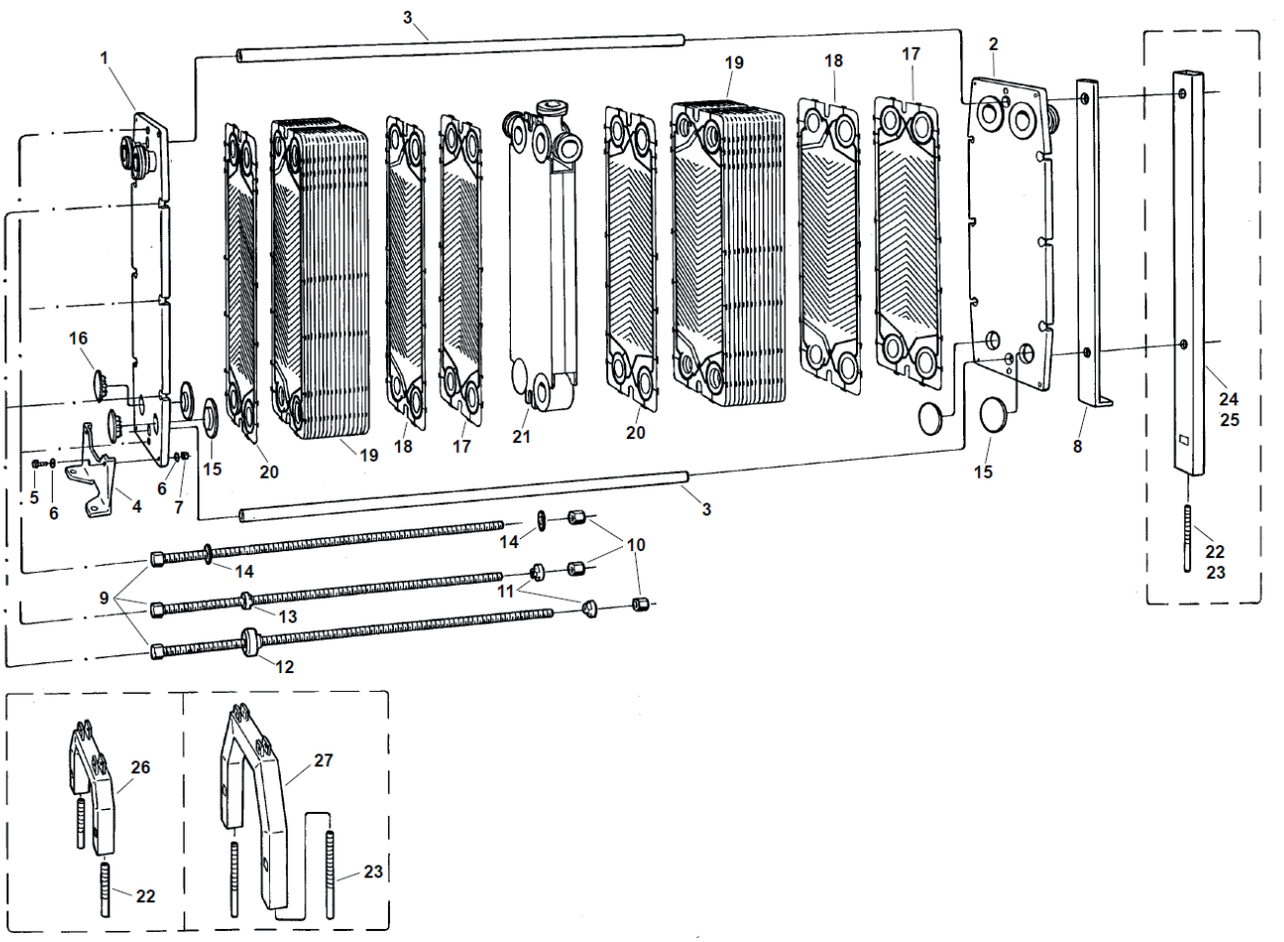

Pos. no.	Part number	Name
1	162211801	Frame / pressure plate

Pos. no. 2 Carrying bar bolt	Length (mm)	1) Max no. of plates		
		M6-M		M6
		0.5 mm	0.6 mm	0.5 mm
162444504	630	37	36	51
162444505	780	68	67	94
162444506	1080	130	127	180
162444507	1380	192	188	266

Pos. no. 3+ (3) Carrying bar	Length (before cutting) (mm)
162345901	450
162345902	600
162345903	900
162345904	1200

Carrying bar is cut at assembly to fit the A-measure. Length of "pos 3" = A+15mm

Pos. no.	Part number	Name	Comment
4	162750801	Foot	
5	162747501	Supporting column	
6	162346101	Washer	OD = 30 mm
7	162346201	Washer	OD = 40 mm
8	22310137	Washer	BRB 17x30, A4
9	162346001	Washer	Ø40 mm, flat washer
10	22180340	Nut	M16, A4

Pos. no. 11 Tightening bolt	Length (mm)	1) Max no. of plates		
		M6-M		M6
		0.5 mm	0.6 mm	0.5 mm
162444502	330	37	36	51
162444503	480	68	67	94
162444505	780	130	127	180
162444506	1080	192	188	266

Pos. no.	Part number	Name	Comment
12	3232420246	Nut	
13	162442401	Guide washer	
14	162442101	Lock washer	
15	22104606	Screw	
16	22310135	Washer	
17	22180322	Nut	
18	3232445071	Blind washer	
19	99015101	Seal plug	
20	End plate I		
21	Transition plate		
22	Cannel plate		
23	End plate II		
24	Connection plate		
25	162647201	Seal plug	2) Optional equipment
26	1627496	Foot (low)	2) Optional equipment
(26)	1627497	Foot (high)	2) Optional equipment US version
27	1627505	Supporting column ext.	2) Optional equipment
28	1627504	Supporting column	2) Optional equipment
29	162750601	Levelling screw	2) Optional equipment

1) When connection plates; Reduce no of plates with 13 M6-M plates or 19 M6 plates.

2) Optional equipment "Adjustable leg kit" includes pos 25-29

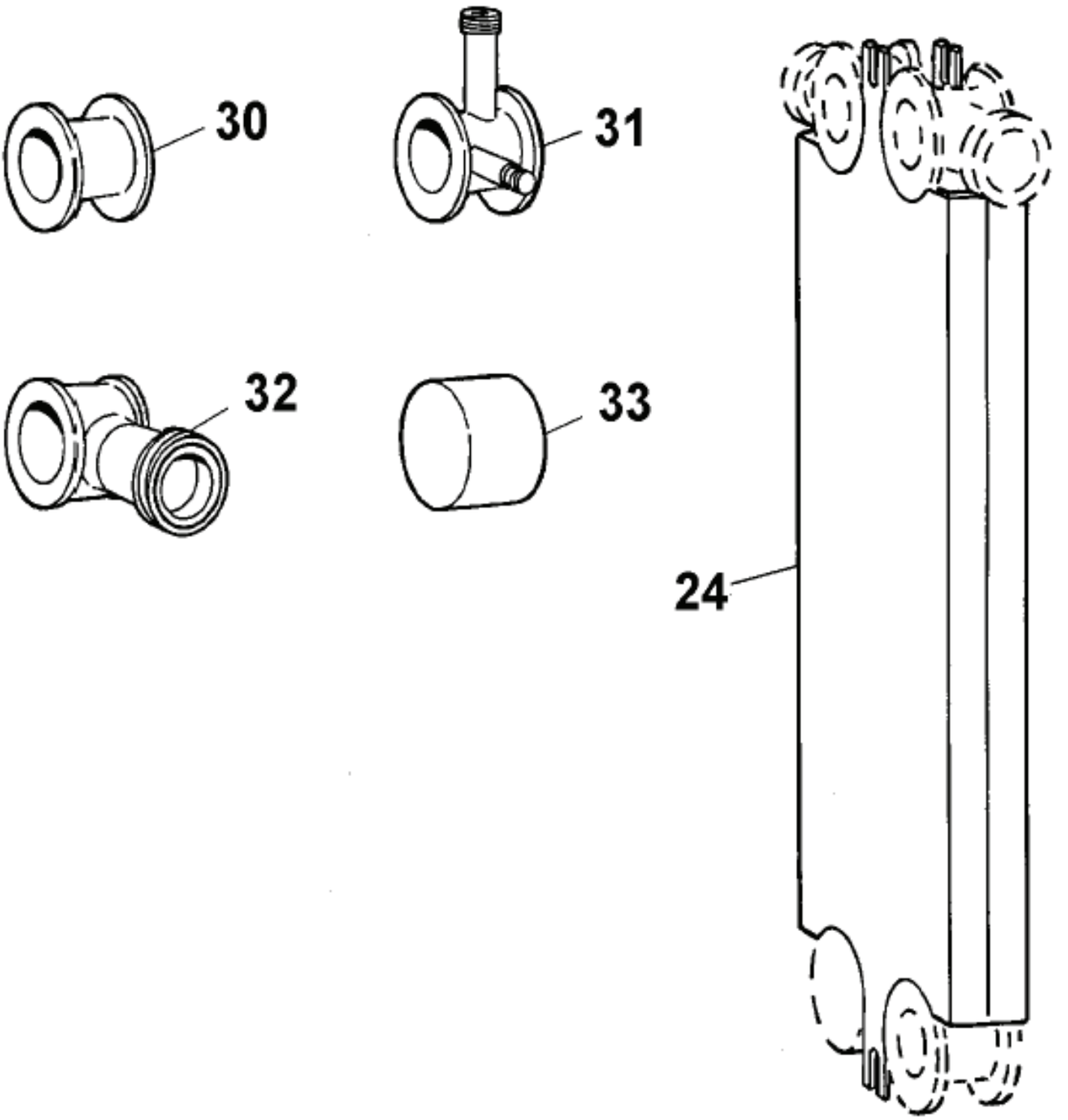

Table 12. Connection plate

Pos. no.	Part number	Name	Comments
24	3232132001	Connection plate	
30	3232554042	Through passage	51 mm
31	3232554051	Through passage	51 mm, with dive tube
32	3135054062	Single corner	51 mm
33	3232554101	Blind corner	

Table 13. Gaskets for M6-M/MD

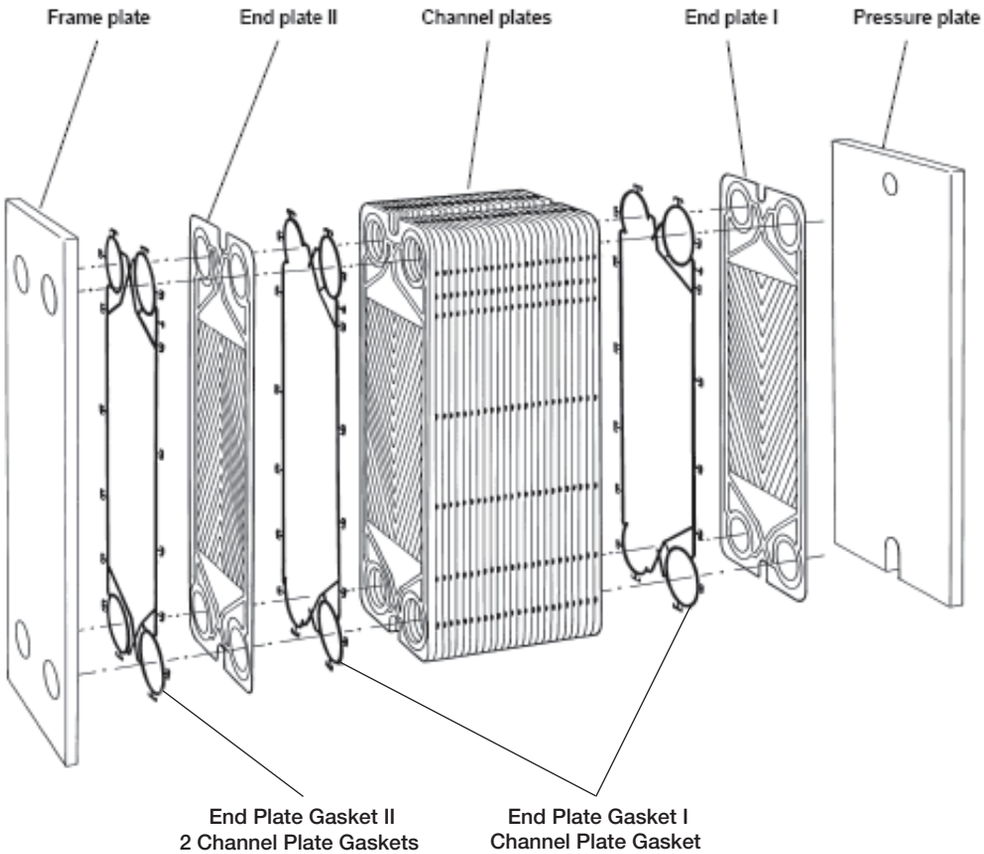

Quality	Gasket type	End plate gasket II (or to be made of: 2 channel plate gaskets)	Channel plate gasket End plate gasket I	Colour marking
		Part numbers		
EPDMC	Clip-on	3233014243 *)		1 Grey
	Clip-on Lip		3233014193	1 Grey
NBRP	Clip-on	3233014246	3233014146	1 Blue
EPDMF	Clip-on	3233014228	3233014128	2 Grey
EPDMAL	Clip-on	3233014229 *)		3 Grey
	Clip-on Lip		3233014179	4 Grey
NBRB	Clip-on	3900173907	3900173907	2 Blue
NBRHTF	Clip-on		3233014127	3 Blue
HNBR	Clip-on		3233014134	1 Blue + 1 Red
FKMG	Clip-on		3233014148	3 Purple
CR	Clip-on		3233014145	1 Green
CSM	Clip-on		3233014149	1 Red

*) Channel plate gasket without lip

Table 14. Gasket for M6-M/MD

Qualities		NBRP	EPDM	EPDMF	EPDMAL
Colour marking		1 Blue	1 Grey	2 Grey	3 Grey
Transition plates					
*					
Ring gaskets (To be glued with GC-6)	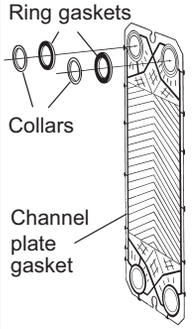	3233066346	3233066343	3233066328	3233066329
Collars (To be glued with GC-6)					
Stainless steel	3233085351				
Titanium	3233085352				
Hast. C	3233085354				
SMO	3233085355				
1 End plate gasket II		3233014246			
FG-frame					
Rubber lining frame plate (DIN)					
- long		162510402	162510407		
- short		162510405	162510410		
Rubber lining pressure plate (DIN)					
- short		162510405	162510410		
Rubber lining frame plate (ANSI/JIS)					
- short		162510502	16251055		

* **Note!**
These parts only needed if there in the plate pack list - is a transition plate specified, i.e. code DD=41-55

Table 15. Gasket for M6-M/MD

Qualities		HNBR	FKMG	NBRHTF	CSM	CR
Colour marking		1 Blue +1 Red	3 Purple	3 Blue	1 Red	1 Green
Transition plates						
*						
Ring gaskets (To be glued with GC-6)	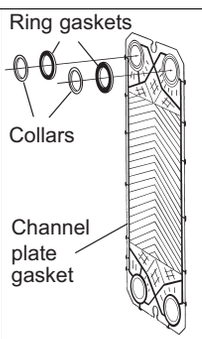	3233066334	3233066348	3233066327	3233066349	3233066345
Collars (To be glued with GC-6)						
Stainless steel	3233085351					
Titanium	3233085352					
Hast. C	3233085354					
SMO	3233085355					
1 End plate gasket II						
FG-frame						
Rubber lining frame plate (DIN)						
- long						
- short						
Rubber lining pressure plate (DIN)						
- short						
Rubber lining frame plate (ANSI/JIS)						
- short						

* **Note!**
These parts only needed if there in the plate pack list - is a transition plate specified, i.e. code DD=41-55

Qualities	NBRP	EPDM	EPDMF	EPDMAL	HNBR	FKMG
Colour marking	2 Blue	1 Grey	2 Grey	3 Grey	1 Blue +1 Red	3 Purple
FG-frame						
Rubber lining pressure plate (ANSI/JIS)						
- short	162510405	162510410				
FM-frame						
Rubber lining frame plate (DIN)						
- long	162510401	162510406				
- short	162510403	162510408				
Rubber lining pressure plate (T=20 mm*)						
- short	162510403	162510408				
Rubber lining pressure plate (T=26 mm*)						
- short	162510404	162510409				
Rubber lining frame plate (ANSI/JIS T=20 mm*)						
- short	162510501	162510504				
Rubber lining frame plate (ANSI/JIS T=26 mm*)						
- short	162510503	162510506				

*) T = thickness of the pressure plate

Table 16. Gaskets for M6

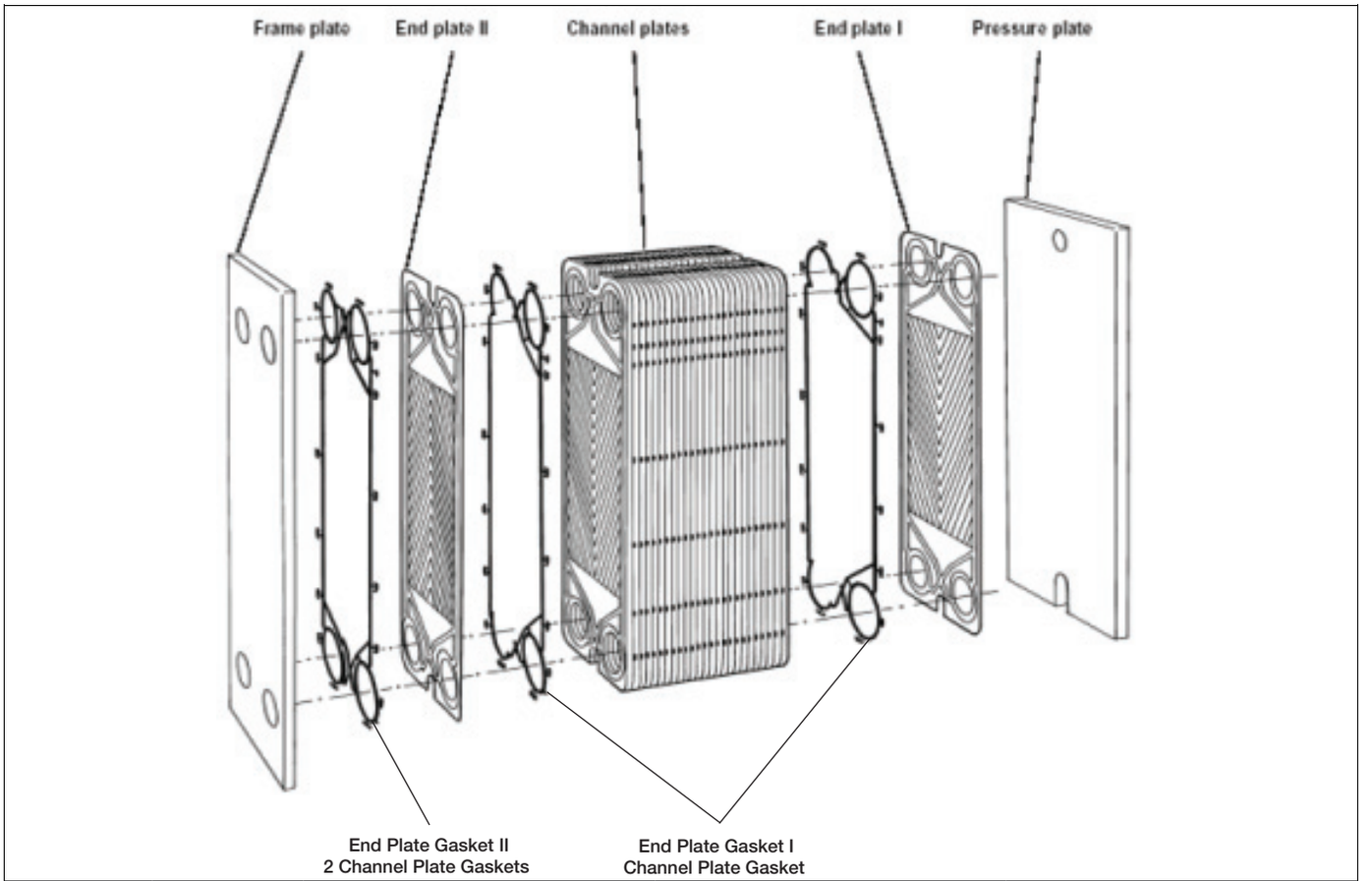

Quality	Gasket type	End plate gasket II (or to be made of: 2 channel plate gaskets)	Channel plate gasket End plate gasket I	Colour marking
		Part numbers		
EPDMCT	Clip-on	3233014043	3233014043	1 Grey + 1 Yellow
NBRP	Clip-on	3233014046	3233014046	1 Blue
NBRB	Clip-on	3900172607	3900172607	2 Blue

*) Channel plate gasket without Lip

Table 17. Gaskets for M6

Qualities		NBRP	EPDM
Colour marking		1 Blue	1 Grey
Transition plates			
*			
Ring gaskets (to be glued with GC-6)		3233063696	3233063693
Collars (to be glued with GC-6)			
Stainless steel	3232474821		
Titanium	3232474822		
Channel plate gaskets, 2 pieces		14046	
Qualities		**NBRP**	**EPDM**
Colour marking		**2 Blue**	**1 Grey**
FG-frame			
Rubber lining frame plate (DIN)	- long	162510402	162510407
	- short	162510405	162510410
Rubber lining pressure plate (DIN)	- short	162510405	162510410
Rubber lining frame plate (ANSI/JIS)	- short	162510502	162510505

* **Note!**
These parts only needed if there in the plate pack list - is a transition plate specified, i.e. code DD=41-55

Qualities		NBRP	EPDM
Colour marking		1 Blue	1 Grey
FG-frame			
Rubber lining pressure plate (ANSI/JIS)	- short	162510404	162510410
FM-frame			
Rubber lining frame plate (DIN)	- long	162510401	162510406
	- short	162510403	162510408
Rubber lining pressure plate (T=20 mm*)	- short	162510403	162510408
Rubber lining pressure plate (T=26 mm*)	- short	162510404	162510409
Rubber lining frame plate (ANSI/JIS T=20 mm*)	- short	162510501	162510504
Rubber lining frame plate (ANSI/JIS T=26 mm*)	- short	162510503	162510506

*) T = thickness of the pressure plate

Not manufactured anymore

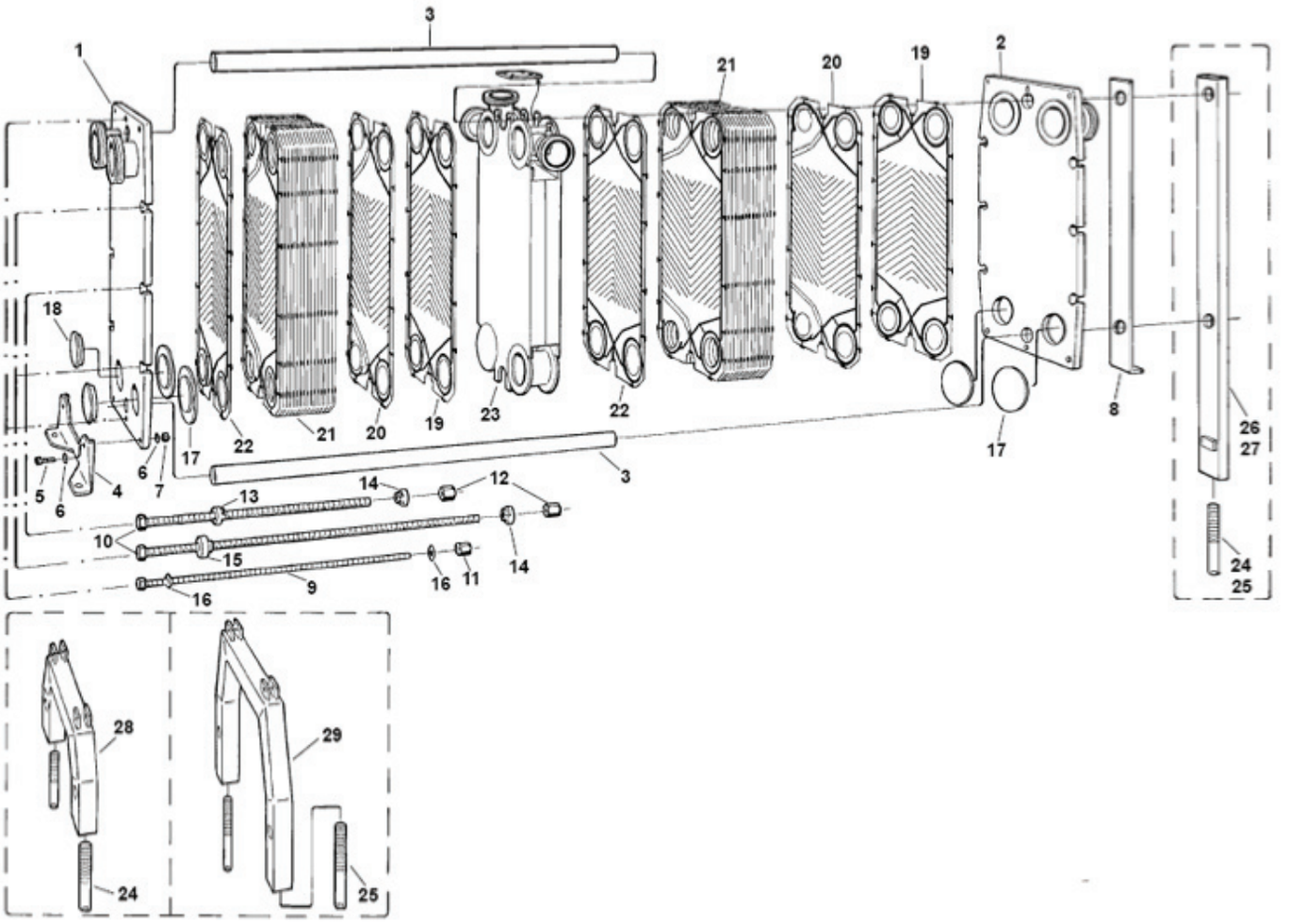

Pos. no. 1 Frame plate					Pos. no. 2 Pressure plate				
Part number	Hole				Part number	Hole			
	S1	S2	S3	S4		T1	T2	T3	T4
164262701	X	X	X	X	164262701	X	X	X	X
164262702	X	X	X		164262702	X	X	X	
164262702		X	X	X	164262702		X	X	X
164262702	X	X		X	164262702	X	X		X
164262702	X		X	X	164262702	X		X	X
164262703	X	X			164262703	X	X		
164262703			X	X	164262703			X	X
164262704	X		X		164262704	X		X	
164262704		X		X	164262704		X		X
164262705	X			X	164262705	X			X
164262705		X	X		164262705		X	X	
164262706	X	X			164262706	X	X		
164262706			X	X	164262706			X	X
164262707					164262707				

Pos. no. 3 Carrying bar	Length (mm)	* Max. no of plates	
		M10-B	M10-M
		0.5 mm	0.5 mm
164257801	580	49	31
164257802	780	98	63
164257803	1080	178	110
164257804	1380	200	157
164257805	1580		190

Pos. no.	Part number	Name	Comments
4	162750901	Foot	
5	221046307	Screw	M16X60
6	22310137	Washer	BRB 17x30
7	22180340	Nut	M16
8	164157601	Supporting column	

Pos. no. 9 / 10 Tightening bolt M16 / M20	Length (mm)	* Max. no of plates	
		M10-B	M10-M
		0.5 mm	0.5 mm
162444502 / 164122809	330 / 360	49	31
162444503 / 164122801	480 / 560	98	63
162444505 / 164122802	780 / 860	178	110
162444509	930	200	157
162444506	1080		190
/ 164122803	1160	200	
/ 164122804	1460		190

Pos. no.	Part number	Name	Comment
11	164166501	Nut	
12	164166601	Nut	
13	164258801	Guide washer	
14	164123001	Lock washer	
15	164122301	Bearing box	
16	22310137	Washer	
17	3232437065	Blind washer	
18	99013801	Seal plug	
19	Transition plate		
20	End plate I		
21	Channel plates		
22	End plate II		
23	Connection plate		
24	164084801	Foot (low) Europe version	
25	164084802	Foot (high) US version	
26	164266001	Supporting column	Europe version
27	164266002	Supporting column	US version
28	164263101	Foot (low) Europe version	
29	164263201	Foot (high) US version	

* When connection plates: Reduce max. number of plates with 24 M10-B plates or 16 M 10-M / connection plate.

Table 18. Accessories

Part number	Name	Comment
3222031006	Ratchet spanner	M16
3222031021	Ratchet spanner	M20

Table 19. Connection plate M10-Base

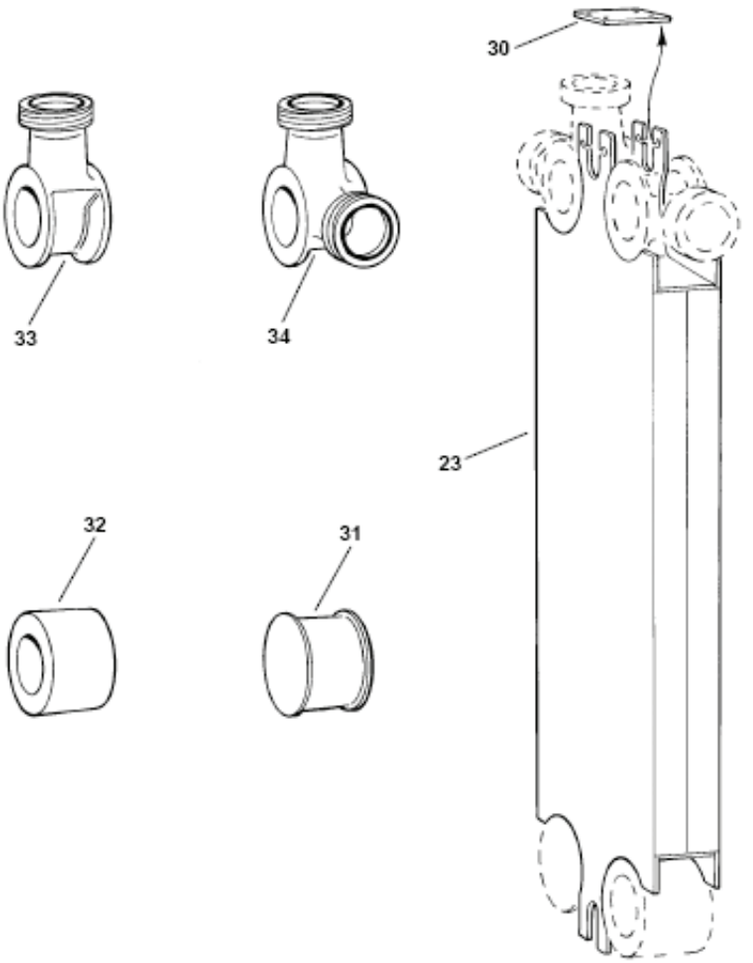

Pos. no.	Part number	Name	Comment
23	164268401	Connection plate	
30	164268301	Sheet	
31	3232552111	Blind corner	
32	3232552161	Through passage	
33	3232552171	Single corner	Nipples not included
34	3232553172	Double corner	Nipples not included

Table 20. Gaskets for M10-B/BD

Channel plate gasket end plate gasket I						
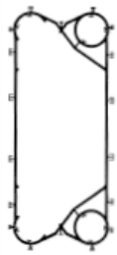	Qualities	NBRP	EPDM	EPDMAL	EPDMCT	HNBR
	Colour marking	1 Blue	1 Grey	3 Grey	1 Grey + 2 Yellow	1 Blue + 1 Red
	- Clip-on	3233016596	3233016593			3233016584
	- Glued	3233016546		3233016029	3233016543	3233016534
	Qualities	CDM	NBRB	FKMG	FKMB	NBRHTF
	Colour marking	1 Red	2 Blue	3 Purple	2 Purple	3 Blue
	- Clip-on			3233016588		
	- Glued	3233016549	3900175607	3233016548	3233016024	3233016527
End plate gasket II (consists of 2 channel plate gaskets)						
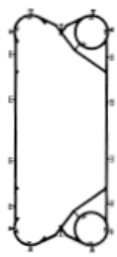	Qualities	NBRP	EPDM	EPDMAL		HNBR
	Colour marking	1 Blue	1 Grey	3 Grey		1 Blue + 1 Red
	- Glued	3233016596	3233016593			3233016584
	alt.					
	- Clip-on	3233016546	3233016543	3233016029		3233016534
	Qualities	CDM	NBRB	FKMG	FKMB	NBRHTF
	Colour marking	1 Red	2 Blue	3 Purple	2 Purple	3 Blue
	- Glued			3233016588		
	alt.					
	- Clip-on	3233016549	3900175607	3233016548	3233016024	3233016527

***Note!** These parts only needed if there in the plate pack list - is a transition plate specified, i.e. code DD=41-55

Transition plates					
*					
Ring gaskets					
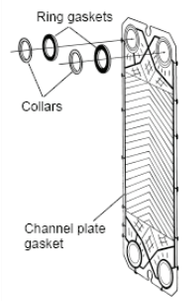	Qualities	NBRP	EPDM	EPDMAL	
	Colour marking	1 Blue	1 Grey	3 Grey	
		3233065146	3233065143	3233065129	
	Qualities	NBRHTF	HNBR	CSM	FKMG
	Colour marking	3 Blue	1 Blue + 1 Red	1 Red	3 Purple
		3233065127	3233065134	3233065149	3233065148
	Collars				
	Stainless steel 3232473671				
	Titanium 3232473672				
	Hast. C 3232473674				
	SMO 3232473675				
	Channel plate gaskets, 2 pieces				
	Qualities	NBRP	EPDM	NBRB	
	Colour marking	1 Blue	1 Grey	2 blue	
	- Glued	3233016596			
	alt.				
	- Clip-On	3233016546		3900175607	
FM-frame					
Rubber lining frame - and pressure plate		3233065523	3233065543		
Rubber lining pressure plate (old design with port hole Ø 78 mm)		3233064873	3233064878		

Qualities	NBRB	EPDM
Colour marking	2 Blue	1 Grey
FM-frame		
Rubber lining frame - and pressure plate (T = 40 mm*)	3233065573	3233065593
Rubber lining frame - and pressure plate (T = 45 mm*)	3233065623	3233065643
Rubber lining frame - and pressure plate (T = 35 mm*) (old design)	no longer available	no longer available
FL-frame		
Rubber lining frame - and pressure plate	3233065473	3233065493
Rubber lining pressure plate (old design with port hole Ø 78 mm)	3233064823	3233064828

*) T= thickness of the frame - and pressure plate

Table 21. Gaskets for M10-M

Channel plate gasket end plate gasket I						
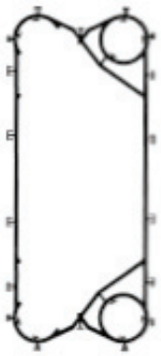	Qualities	NBRP	NBRB	EPDM	EPDMF	EPDMAL
	Colour marking	1 Blue	2 Blue	1 Grey	2 Grey	3 Grey
	- Clip-on	3233015046		3233015043		
	- Glued	3233015096	3900176907		3233015078	3233015079
	Qualities	HNBR	CSM	FKMG	EPDMC	NBRHTF
	Colour marking	1 Blue +1 Red	1 Red	3 Purple	1 Grey + 1 Yellow	3 Blue
	- Clip-on			3233015048		
	- Glued	3233015084	3233015099	3233015098	3233015093	3233015077
End plate gasket II (consists of 2 channel plate gaskets)						
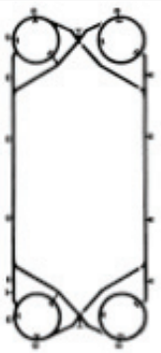	Qualities	NBRP	NBRB	EPDM	EPDMF	EPDMAL
	Colour marking	1 Blue	2 Blue	1 Grey	2 Grey	3 Grey
	- Glued alt.	3233015046		3233015043		
	- Clip-on	3233015096	3900176907	3233015093	3233015078	3233015079
	Qualities	HNBR	CSM	FKMG	EPDMC	NBRHTF
	Colour marking	1 Blue +1 Red	1 Red	3 Purple	1 Grey + 1 Yellow	3 Blue
	- Glued alt.			3233015048		
	- Clip-on	3233015084	3233015099	3233015098		3233015077

Transition plates					
*					
Ring gaskets					
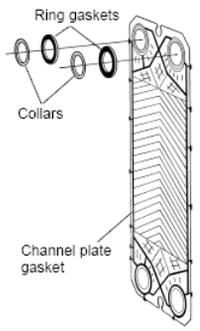	Qualities	NBRP	EPDMAL	EPDM (IND)	NBRHTF (FDA)
	Colour marking	1 Blue	3 Grey	1 Grey	2 Grey
		3233064996	3233064979	3233064993	3233064978
	Qualities	HNBR (Hy-Nitrile)	CSM (Hypalon)	FKMG (Viton G)	NBRHTF (FDA) (HT-Nitrile)
	Colour marking	1 Blue + 1 Red	1 Red	3 Purple	3 Blue
		3233064984	3233064999	3233064998	3233064977
	Collars				
	Stainless steel 3232473671				
	Titanium 3232473672				
	Hast. C 3232473674				
	SMO 3232473675				
	Channel plate gaskets, 2 pieces				
	Qualities	HNBR (Hy-Nitrile)			
	Colour marking	1 Blue + 1 Red			
	- Glued alt. - Clip-on	3233015046 3233015096			

Note!

These parts only needed if there in the plate pack list - is a transition plate specified, i.e. code DD=41-55

FM-frame				
Qualities	NBRP	EPDMAL	EPDM (IND)	EPDMF (FDA)
Colour marking	1 Blue	3 Grey	1 Grey	2 Grey
Rubber lining frame - and pressure plate	3233065523		3233065543	
Rubber lining pressure plate (old design with port hole Ø 78 mm)	3233064873		3233064878	
Qualities	HNBR (Hy-Nitrile)	CSM (Hypalon)	FKMG (Viton G)	NBRHTF (FDA) (HT-Nitrile)
Colour marking	1 Blue + 1 Red	1 Red	3 Purple	3 Blue
FG-frame				
Qualities	NBRP	EPDMAL	EPDM (IND)	EPDMF (FDA)
Colour marking	1 Blue	3 Grey	1 Grey	2 Grey
Rubber lining frame - and pressure plate (T = 40 mm*)	3233065573		3233065593	
Rubber lining frame - and pressure plate (T = 45 mm*)	3233065623		3233065643	
Rubber lining frame - and pressure plate (T = 35 mm*) (old design)	No longer available		No longer available	
Qualities	HNBR (Hy-Nitrile)	CSM (Hypalon)	FKMG (Viton G)	NBRHTF (FDA) (HT-Nitrile)
Colour marking	1 Blue + 1 Red	1 Red	3 Purple	3 Blue
FL-frame				
Qualities	NBRP	EPDMAL	EPDM (IND)	EPDMF (FDA)
Colour marking	1 Blue	3 Grey	1 Grey	2 Grey
Rubber lining frame - and pressure plate	3233065473		3233065493	
Rubber lining pressure plate (old design with port hole Ø 78 mm)	3233064823		3233064828	
Qualities	HNBR (Hy-Nitrile)	CSM (Hypalon)	FKMG (Viton G)	NBRHTF (FDA) (HT-Nitrile)
Colour marking	1 Blue + 1 Red	1 Red	3 Purple	3 Blue

*) T= thickness of the frame - and pressure plate

Not manufactured anymore

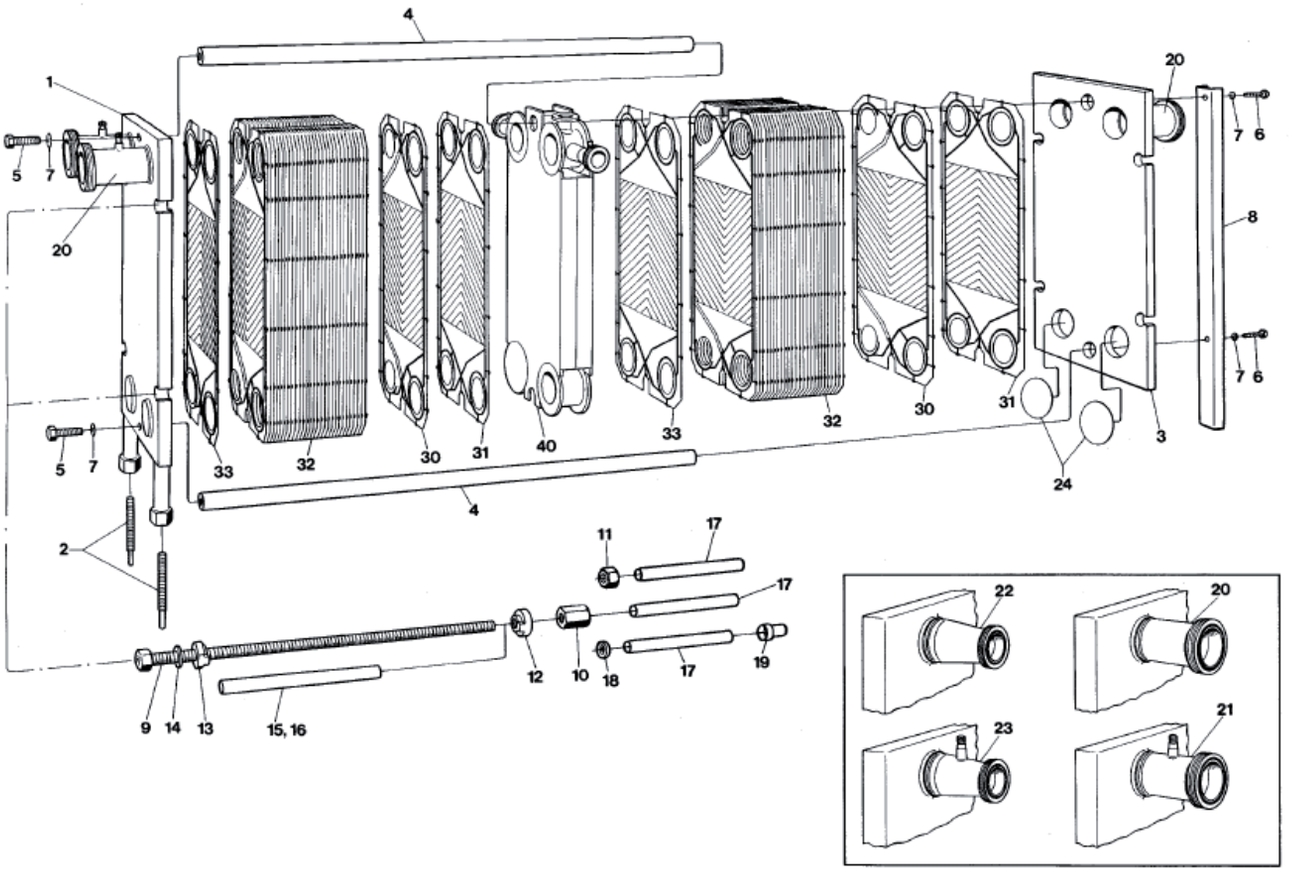

Pos. no.	Part number	Name	Comments
1	3232043056	Frame plate	
2	3232301751	Levelling screw	M30
3	3232088134	Pressure plate	

Pos. no. 4	Carrying bar Length (mm)	* Max. no. of plates					
		M10-B			M10-M		
		0.4 mm	0.5 mm	0.6 mm	0.4 mm	0.5 mm	0.6 mm
3232320083	1250	223	217	212	142	140	138
3232320084	1600	310	302	295	198	195	192
3232320085	2100	400	400	400	278	274	270
3232320086	*				400	400	400

Pos. no.	Part number	Name	Comments
5	26019209	Screw	M6S 20x45
6	26019203	Screw	M6S 20x40
7	22310139	Washer	BRB 21x36
8	3232200321	Supporting column	

Pos. no. 9	Tightening column Length (mm)	* Max. no. of plates					
		M10-B			M10-M		
		0.4 mm	0.5 mm	0.6 mm	0.4 mm	0.5 mm	0.6 mm
3232411073	1050	208	202	198	133	131	129
3232411075	1650	358	349	340	229	225	222
3232411077	2250	400	400	400	325	320	315
3232411079	2850				400	400	400

Pos. no.	Part number	Name	Comments
10	3223448951	Nut	M30
11	3232420201	Nut	M30, Extra nut for TUV
12	3223911432	Lock washer	
13	3232429002	Guide washer	
14	3223911451	Wearing washer	
15	1995101092	Plastic tube	
16	3232428321	Protecting tube	
17	3223448631	Protecting tube	
18	3232428351	Guide ring	
19	3223448641	Protective cover	
20	3232460345	Connection	101.6 mm
21	3232460346	Connection	101.6 mm with Dive tube
22	3232460347	Connection	101.6/76 mm
23	3232460348	Connection	101.6/76 mm with Dive tube
24	2132478031	Blind connection	
30		End plate I	
31		Transition plate	
32		Channel plates	
33		End plate II	
40		Connection plate	

* Length acc. to order

** When conn. Plates: reduce max. no of plates with 24 M10-B plates/16 M10-M plates

Table 22. Accessories

Part number	Name	Comment
3222031015	Spanner	M30, 1 1/8"
3131709351	Coupling spanner	

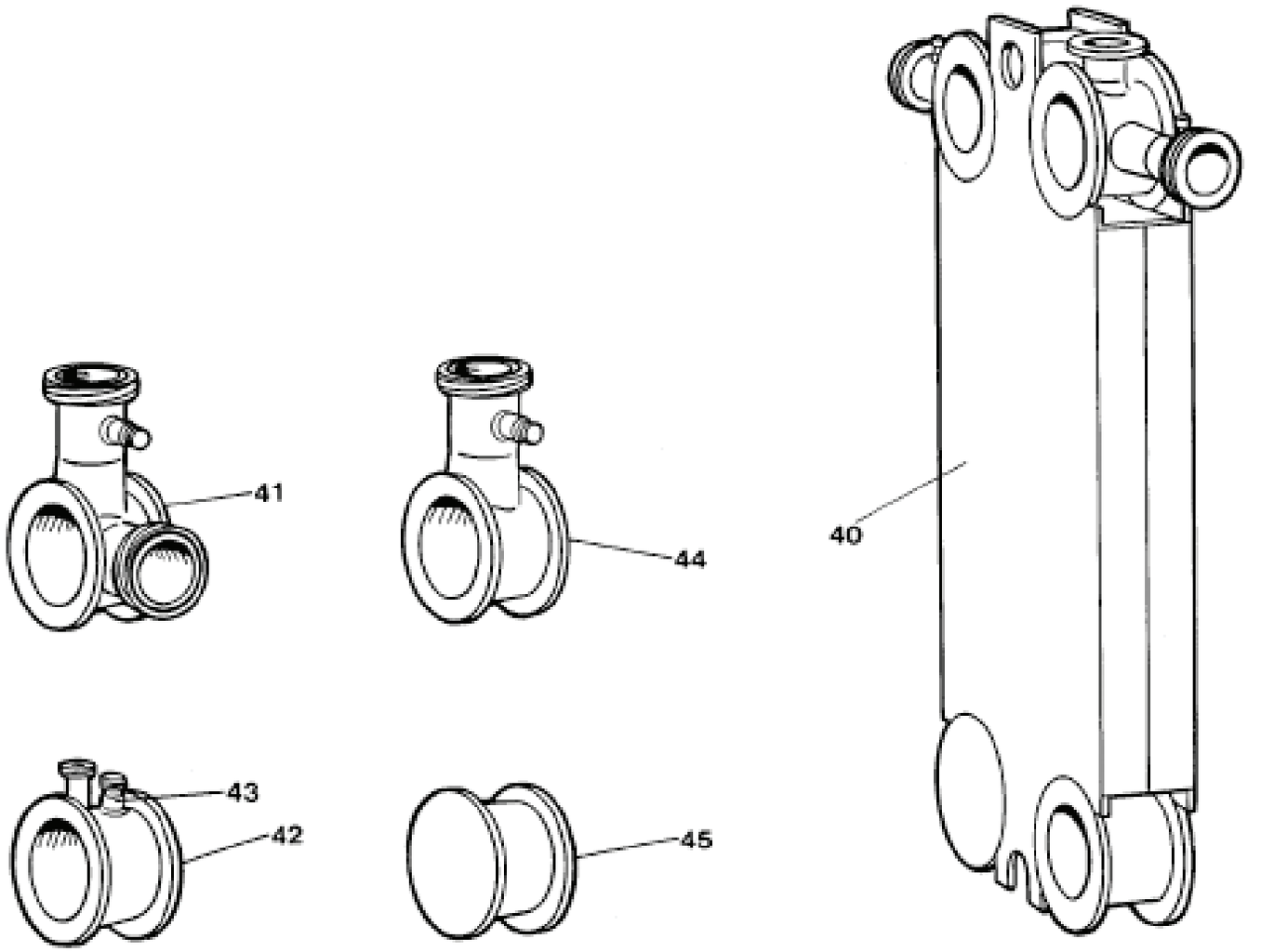

Table 23. Connection plate

Pos. no.	Part number	Name	Comment
40	3232130001	Connection plate	
41	3232553172	Double corner	76 mm
	3232552141	Double corner	76 mm, with Dive tube
42	3232553161	Through passage	
	3232552121	Through passage	With Dive tube and Nib
43	3135000201	Ventilating valve	R3/4"
44	3232552131	Single corner	76 mm
	3232552132	Single corner	76 mm, with Dive tube
45	3232552111	Blind corner	

Table 24. Gaskets for M10B/BD

Qualities		NBRP	EPDM	EPDMAL	EPDMCT	EPDMF	HNBR**
Colour marking		1 blue	1 grey	3 grey	1 grey + 2 yellow	2 grey	1 blue + 1 green
Channel plate gasket							
End plate gasket I							
Glued Rib Clip-On Rib Clip-On Peak		3233016596 3233016546	3233016593	3233016029 * 3233016029	3233016543	3233016578 3233016528	3233016584 3233016534
End plate gasket II (consists of 2 channel plate gaskets)							
Glued Rib alt. Clip-On Rib alt. Clip-On Peak		3233016596 3233016546	3233016593	 3233016029	3233016543	3233016528	3233016584 3233016534

Note!

* Before gluing the T- flaps must be cutted of.

** HNBR colour marking changed from 110101. Old colour marking 1 blue + 1 red.

Table 25. Gaskets for M10-B/BD

Qualities		CSM	NBRB	FKMG	FKMB	QP	NBRHTF
Colour marking		1 red	2 blue	3 purple	2 purple	No mark	3 blue
Channel plate gasket							
End plate gasket I							
Glued Rib Clip-On Rib Clip-On Peak		3233016549	3900175607	3233016598 3233016548	3233016524	3233016547	3233016531
End plate gasket II (consists of 2 channel plate gaskets)							
Glued Rib alt. Clip-On Rib alt. Clip-On Peak	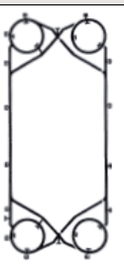	3233016549	3900175607	3233016598 3233016548	3233016524	3233016547	3233016531

Note!

* Before gluing the T- flaps must be cutted of.

** HNBR colour marking changed from 110101. Old colour marking 1 blue + 1 red.

Qualities			NBRP	EPDM	EPDMAL	NBRB
Colour marking			1 blue	1 grey	3 grey	2 blue
Transition plates			Code 32330-			
*Ring gaskets		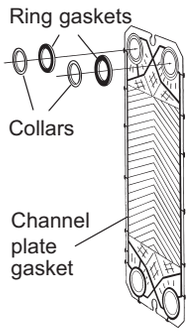	3233065146	3233065143	3233065129	
Collars						
Stainless steel	3232473671					
Titanium	3232473672					
Hast.C	3232473674					
SMO	3232473675					
Channel plate gaskets, 2 pieces						
	Glued Rib alt.		3233016596			
	Clip-On Rib		3233016546		3900175607	
FM-frame						
Rubber lining frame - and pressure plate			3233065543		3233065523	
Rubber lining pressure plate (old design with port hole Ø 78 mm)			3233064878		3233064873	

Note!

* These parts only needed if there in the plate pack list - is a transition plate specified, i.e. code DD=41-55
* HNBR colour marking changed from 110101. Old colour marking 1 blue + 1 red

Qualities			QP	HNBR**	CSM	FKMG
Colour marking			no mark	1 blue + 1 green	1 red	3 purple
Transition plates						
*Ring gaskets		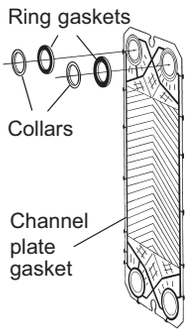	3233065147	3233065134	3233065149	3233065148
Collars						
Stainless steel	3232473671					
Titanium	3232473672					
Hast.C	3232473674					
SMO	3232473675					
Channel plate gaskets, 2 pieces						
	Glued Rib alt.					
	Clip-On Rib					
FM-frame						
Rubber lining frame - and pressure plate						
Rubber lining pressure plate (old design with port hole Ø 78 mm)						

Note!

* These parts only needed if there in the plate pack list - is a transition plate specified, i.e. code DD=41-55
* HNBR colour marking changed from 110101. Old colour marking 1 blue + 1 red

Qualities	NBRB	EPDM	EPDMAL	HNBR**	CSM	FPMG
Colour marking	2 blue	1 grey	3 grey	1 blue + 1 green	1 red	3 purple
FG-frame						
Rubber lining frame - and pressure plate (T = 40 mm*)	3233065573	3233065593				
Rubber lining frame - and pressure plate (T = 45 mm*)	3233065623	3233065643				
Rubber lining frame - and pressure plate (T = 35 mm*) (old design)	no longer available	no longer available				
FL-frame						
Rubber lining frame - and pressure plate	3233065473	3233065493				
Rubber lining pressure plate (old design with port hole Ø 78 mm)	3233064823	3233064828				

*) T= thickness of the frame - and pressure plate

Table 26. Gasket for M10-M

Qualities		NBRP	NBRB	EPDM	EPDMF	EPDMAL	HNBR*
Colour marking		1 blue	2 blue	1 grey	2 grey	3 grey	1 blue + 1 green
Channel plate gasket end plate gasket I							
Glued Peak Clip-On Peak Clip-On Rib	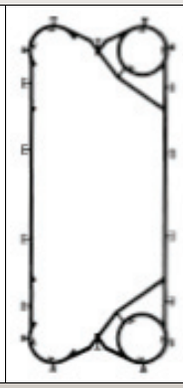	3233015046 3233015096	3900176907	3233015043	3233015078	3233015079	3233015084
Qualities			NBRFF			EPDMFF	
Colour marking			1 blue + 1 pink			1 grey + 1 pink	
Clip-On Peak			3900561627			3900561626	

* HNBR colour marking changed from 110101. Old colour marking 1 blue + 1 red.

Table 27. Gasket for M10-M

Qualities		CSM	FKMG	EPDMC	FKMT	NBRHTF
Colour marking		1 red	3 purple	1 grey +1 yellow	4 purple	3 blue
Channel plate gasket End plate gasket I						
Glued Peak Clip-On Peak Clip-On Rib	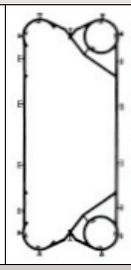	3233015099	3233015048 3233015098	3233015093	3233015287	3233015081
Qualities				EPDMP		FKMFF
Colour marking				1 grey +1 green		1 purple +1 pink
Clip-On Peak				3900176928		3900825730

* HNBR colour marking changed from 110101. Old colour marking 1 blue + 1 red.

Qualities		NBRP	NBRB	EPDM	EPDMF	EPDMAL	HNBR*
Colour marking		1 blue	2 blue	1 grey	2 grey	3 grey	1 blue +1 green
End plate gasket II (consists of 2 channel plate gaskets)							
Glued Peak alt. Clip-On Peak alt. Clip-On Rib	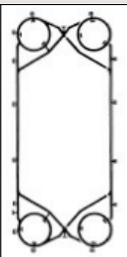	3233015046 3233015096	3900176907	3233015043	3233015078	3233015079	3233015084
Qualities			NBRFF			EPDMFF	
Colour marking			1 blue + 1 pink			1 grey + 1 pink	
Clip-On Peak			3900561627			3900561626	

* HNBR colour marking changed from 110101. Old colour marking 1 blue + 1 red.

Qualities		CSM	FKMG	EPDMC	FKMT	NBRHTF
Colour marking		1 red	3 purple	1 grey + 1 yellow	4 purple	3 blue
End plate gasket II (consists of 2 channel plate gaskets)						
Glued Peak alt. Clip-On Peak alt. Clip-On Rib	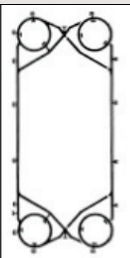	3233015099	3233015048 3233015098	3233015093	3233015287	3233015081
Qualities				EPDMP		FKMFF
Colour marking				1 grey +1 green		1 purple +1 pink
Clip-On Peak				3900176928		3900825730

* HNBR colour marking changed from 110101. Old colour marking 1 blue + 1 red.

Qualities			NBRP	EPDMAL	EPDM (IND)	EPDMFF	NBRFF
Colour marking			1 blue	3 grey	1 grey	1 grey + 1 pink	1 blue + 1pink
Transition plates							
***Ring gaskets**		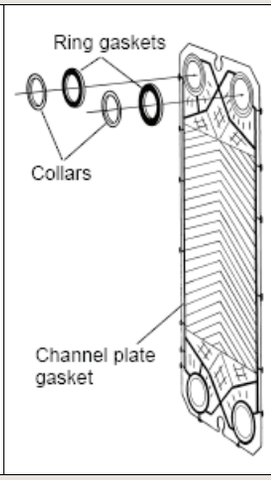	3233064996	3233064979	3233064993	390056172	3900561727
Collars							
Stainless steel	3900771801						
Titanium	3900771802						
Nickel 200/201	3900771802						
C276	3900771804						
SMO 254	3900771805						
G30	3900771806						
Nickel 400	3900771807						
TiPd	3900771808						
1.4439	3900771809						
B3	3900771810		3233015046				
D205	3900771811		3233015096				
316L	3900771812						
C2000	3900771813						
Channel plate gaskets, 2 pieces							
Glued Peak alt. Clip-On Peak							
FM-frame							
Rubber lining frame - and pressure plate			3233065523		3233065543		
Rubber lining pressure plate (old design with port hole Ø 78 mm)			3233064873		3233064878		

Note!

* These parts only needed if there in the plate pack list - is a transition plate specified, i.e. code DD=41-55

** HNBR colour marking changed from 110101. Old colour marking 1 blue + 1 red.

Qualities			HNBR** (Hy-Nitrile)	CSM (Hypalon)	FKMG (Viton G)	EPDMP
Colour marking			1 blue + 1 green	1 red	3 purple	1 grey + 1 green
Transition plates						
***Ring gaskets**		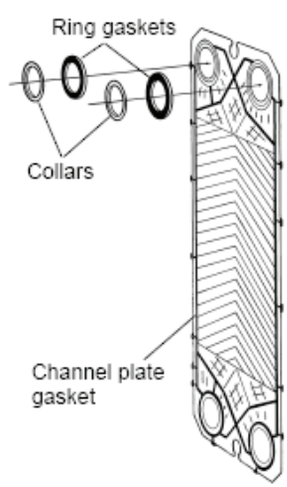	3233064984	3233064999	3233064998	3900561728
Collars						
Stainless steel	3900771801					
Titanium	3900771802					
Nickel 200/201	3900771802					
C276	3900771804					
SMO 254	3900771805					
G30	3900771806					
Nickel 400	3900771807					
TiPd	3900771808					
1.4439	3900771809					
B3	3900771810					
D205	3900771811					
316L	3900771812					
C2000	3900771813					
Channel plate gaskets, 2 pieces						
Glued Peak alt. Clip-On Peak						
FM-frame						
Rubber lining frame - and pressure plate						
Rubber lining pressure plate (old design with port hole Ø 78 mm)						

Note!

* These parts only needed if there in the plate pack list - is a transition plate specified, i.e. code DD=41-55

** HNBR colour marking changed from 110101. Old colour marking 1 blue + 1 red.

Qualities	NBRB	EPDM (IND)	EPDMF (FDA)	HNBR** (Hy-Nitrile)	CSM (Hypalon)	FKMG (Viton G)
Colour marking	2 blue	1 Grey	2 Grey	1 Blue + 1 Green	1 Red	3 Purple
FG-frame						
Rubber lining frame - and pressure plate (T = 40 mm*)	3233065573	3233065593				
FG-frame						
Rubber lining frame - and pressure plate (T = 45 mm*)	3233065623	3233065643				
Rubber lining frame - and pressure plate (T = 35 mm*) (old design)	no longer available	no longer available				
FL-frame						
Rubber lining frame - and pressure plate	3233065473	3233065493				
Rubber lining pressure plate (old design with port hole Ø 78 mm)	3233064823	3233064828				

*) T= thickness of the frame - and pressure plate

** HNBR colour marking changed from 110101. Old colour marking 1 blue + 1 red.

Not manufactured anymore

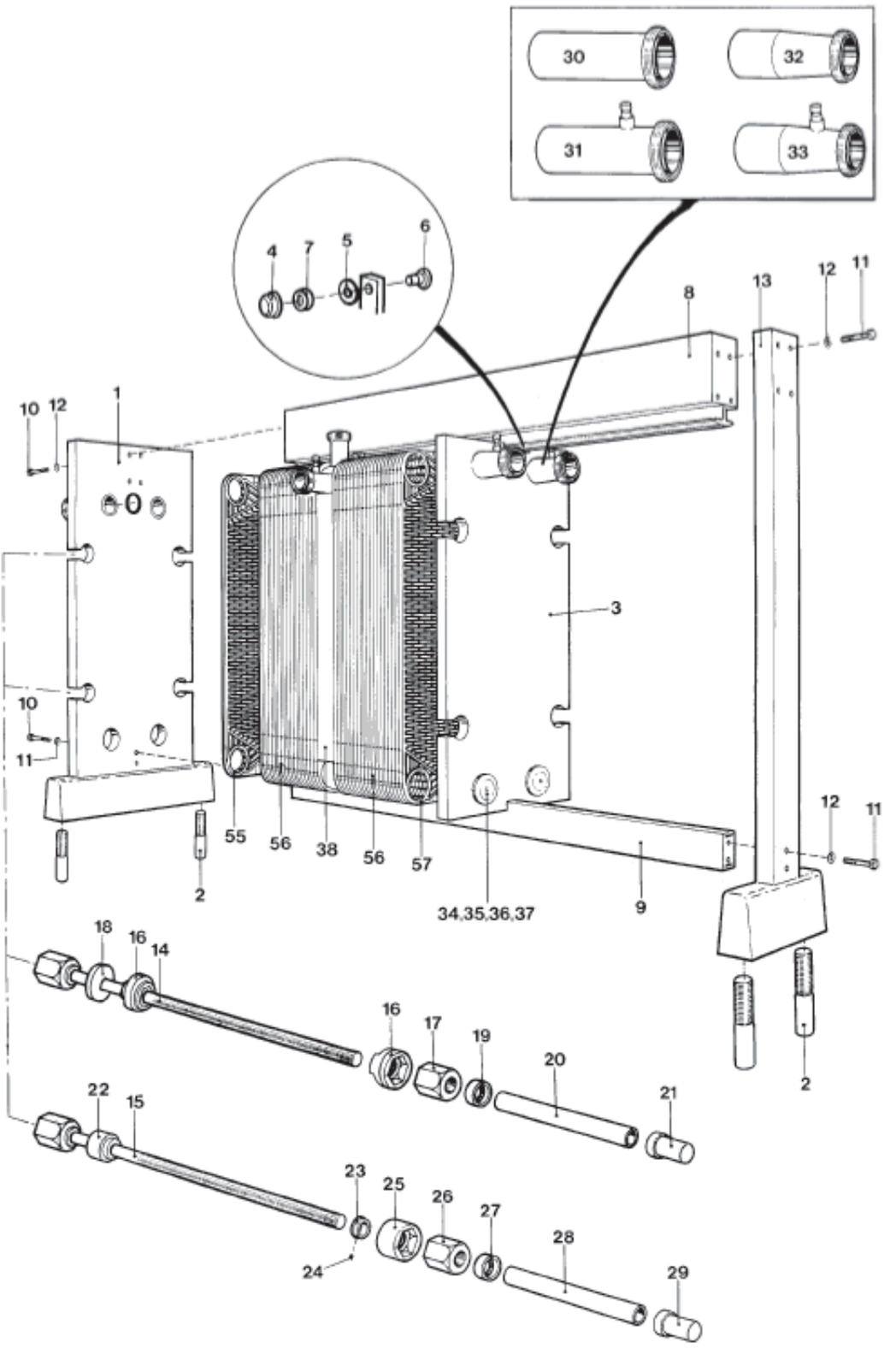

Pos. no.	Part number	Name	Comments
1	3226430011	Frame plate	
2	3226424061	Foot	
3	3226430111	Pressure plate	
4	3226521631	Wheel	
5	3226511161	Bearing disc	
6	3226411211	Shaft	
7	52840203	Needle bearing	NKI 20/16

Pos. no.8 Carrying bar	Pos. no.9 Guiding bar	Length (mm)	Max.number of plates * 0.8 mm
3226542801	3232340012	1200	101
3226542802	3232340014	1800	177
3226542803	3232340016	2400	253
3226542804	3232340018	3000	329
3226542805	3232340021	3600	405
	3232340022	< 3600 **	405
3226542806	3232340001	4200	481
3226542807		**	600
	3232340002	>3600 **	600

Pos. no.	Part number	Name	Comments
10	22104611	Screw	M6S M12x70
11	22104613	Screw	M6S M12x90
12	22310135	Washer	BRB 13x24
13	3232213001	Supporting column	
2	3226424061	Foot	

Pos. no. 14 +15 - Tightening bolt		Length (mm)	Max.number of plates *
M30	M39		0.8 mm
3223448902	3226540601	1050	95
3223448904	3226540602	1650	171
3223448906	3226540603	2250	247
3223448908	3226540604	2850	323
3223448909	3226540605	3450	399
3223448911		**	400
	3226540606	>3450 **	600

Required for tightening bolt m30			
16	3232428283	Lock washer	
17	3223448951	Nut	
	3223448941	Nut	
18	3223911451	Wearing washer	Extra nut for tuv approval
19	3232428351	Guide ring	
20	3223448631	Protecting tube	
21	3223448641	Protective cover	
Required for tightening bolt, m39			
22	3226423101	Bearing box	
23	3226540581	Stop ring	
24	26009301	Stop screw	
25	3226540641	Lock washer	
26	3226540631	Nut	
	3226540621	Nut	Extra nut for tuv approval
27	3223920571	Guide ring	
28	3223920581	Protecting tube	
29	3226540651	Protecting cap	

Connections			
30	3226430271	Tube	Ø 76mm
31	3226430281	Tube with dive tube	Ø 76mm
32	3226430301	Reducing tube	Ø 76/63.5mm
33	3226430321	Reducing tube with dive tube	Ø 76/63.5mm
Blind connection			
34	3226430361	Blind cover	
35	3226430381	Securing plate	
36	3226430391	Cover	
37	99007307	Screw	
Connecting plate			
38		Connecting plate	
55		End plate I	
56		Channel plates	
57		End plate ii	
Tools			
	3222031002	Rachet spanner nv80	For m39
	3222031015	Rachet spanner nv46	For m30
	3223481001	Pneumatic tightening nut	
	3223448851	Gasketing tool	

* when connecting plates; reduce max. Number of plates with 10 plates / connecting plate

** length acc. to order

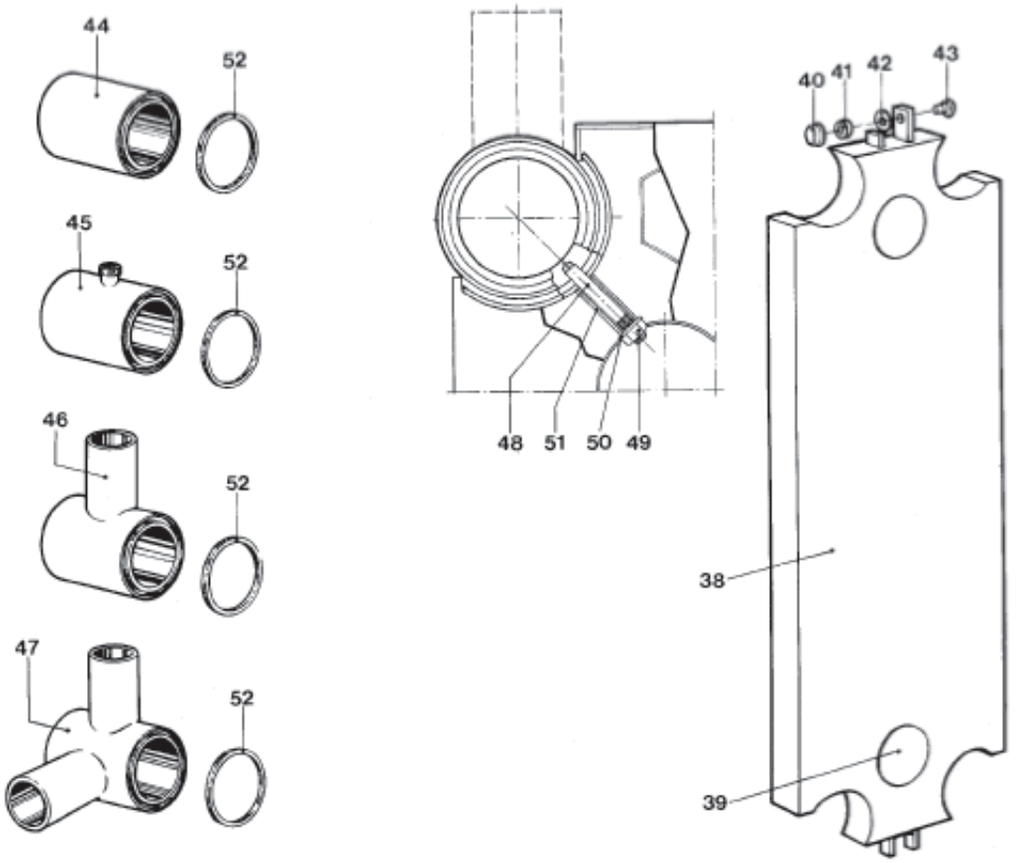

Pos. no.	Qty	Part number	Description
38	X	3232124011	Connecting plate
Required for each connecting plate			
39	2	3226542681	Covering washer
40	1	3226521631	Wheel
41	1	52840203	Needle bearing nki 20/16
42	1	3226511161	Bearing disc
43	1	3226411211	Shaft
	X	3232550021	Blind corner
44	X	3232550071	Corner with through passage
	X	3232550072	Corner with through passage (for USA)
45	X	3232550031	Corner with through passage with thermometer boss
	X	3232550032	Corner with through passage with thermometer boss (for USA)
46	X	3232550081	Corner with single connection ø63.5 mm without bottom
	X	3232550082	Corner with single connection ø63.5 mm without bottom (for USA)
47	X	3232550061	Corner with double connection ø63.5 mm
	X	3232550062	Corner with double connection ø63.5 mm (for USA)
Required for each corner			
48	1	26020205	Screw
49	1	22180329	Nut
50	1	22310161	Washer
51	1	3232553051	Socket
52	1	322641604x*	Gasket (not for blind corner)

* see gasket for PHE type H10

Table 28. Gaskets for H7

Qualities		NBRP	EPDMF	NBRHTF
Colour marking		1 Blue	2 Grey	3 Blue
Channel plate gasket				
End plate gasket I		3226416146	3226416128	3226416127
End plate gasket II				
1 set consists of :		3226416646	3226416628	3226416627
2 Gasket heads		3226416846	3226416828	3226416827
1 Channel plate gasket		3226416146	3226416128	3226416127

Qualities		NBRP	EPDMF	NBRHTF
Colour marking		1 Blue	2 Grey	3 Blue
Ring gaskets for corner				
H7- RC & H7-RM		3226416046	3226416028	3226416027
for RC- and RM frame plate		3226416096	3226416078	3226416077
Transition plates (only for H7-FMC)				
Ring gaskets (1 piece required for each port hole)		3233064196	3233064178	3233064177
Collars (1 piece required for each port hole)				
Stainless steel	3232475061			
Plate gaskets				
1 Channel plate gasket		3226416146		3226416127
2 Gasket heads (or less)		3226416846		3226416827

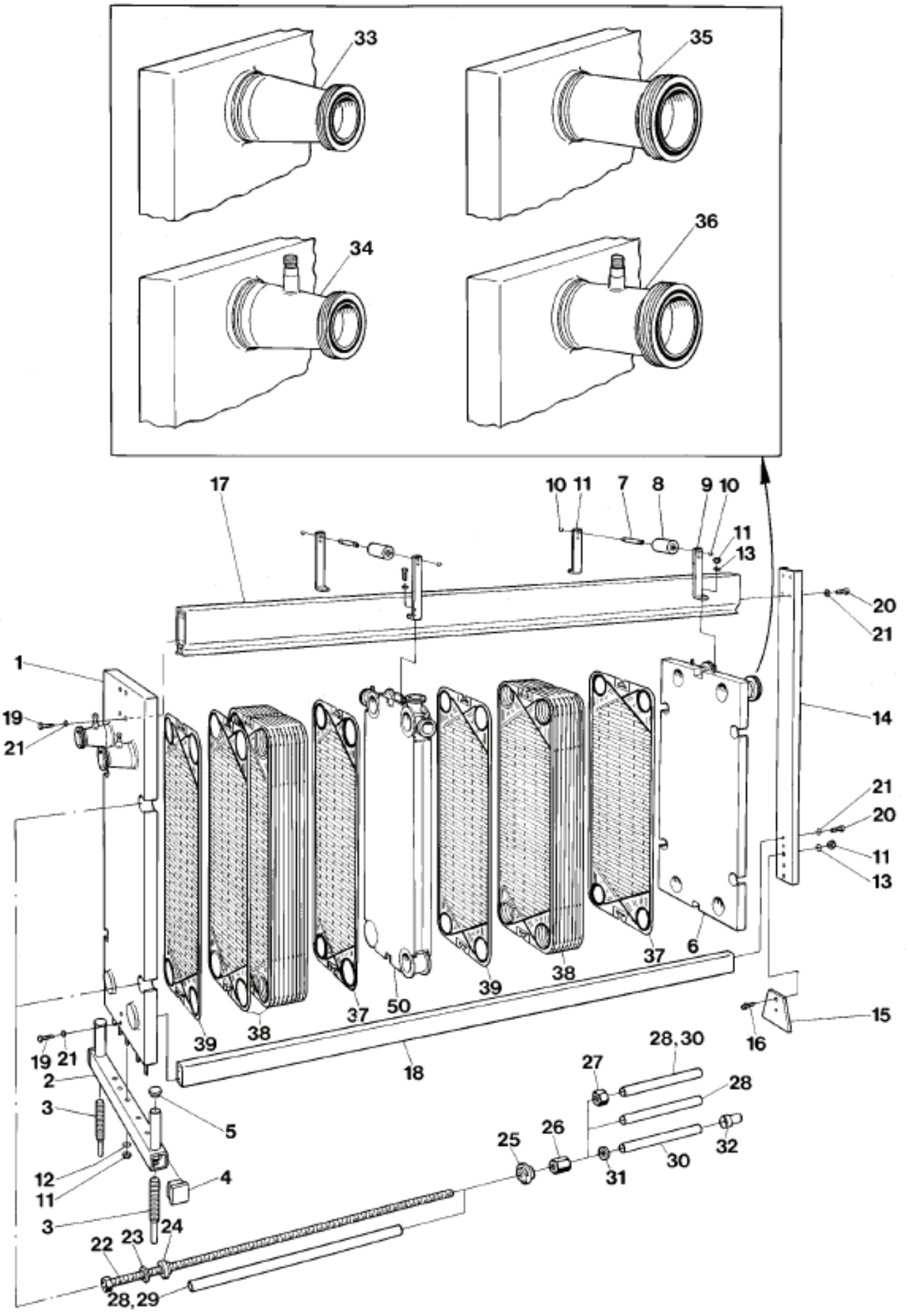
33
35
34
36
17
10 11
7
8
9 10
11
13
20
21
1
19
21
14
21
20
11
13
6
37
38
39
50
37
38
39
15
16
18
19 21
2
3
5
12
11
3
4
24
23
22
28,29
28,30
27
28
25
26
30
31
32

Pos. no.	Part number	Name	Comments
1	3232042002	Frame plate	
2	3232301641	Lower part	
3	3232301661	Levelling screw	
4	99013601	Square plug	Q8080
5	99013402	Seal plug	F33
6	3232086002	Pressure plate	
7	3232361341	Shaft	
8	3232361371	Wheel	
9	3232361331	Holder	
10	99013301	Safety ring	
11	22180340	Nut	M6 M16
12	3232301721	Washer	
13	22310137	Washer	BRB 17x30
14	3232201222	Supporting column	
15	3232201231	Plate	
16	221046303	Screw	M6S M16x40

Pos. no. 17 Carrying bar	Pos. no. 18 Guiding bar	Length (mm)	Max. number of plates
3232320381	3232340012	1200	119
3232320382	3232340014	1800	200
3232320383	3232340016	2400	281
3232320384	3232340018	3000	362
3232320385	3232340021	3600	400
3232320386	3232340022	*	

Pos. no.	Part number	Name	Comments
19	22104611	Screw	M6S 12x70
20	22104622	Screw	M6S 12x35
2	22310135	Washer	BRB 13x24

Pos. no. 22 M30 Steel 2317 (X22CrMoV121)	Tightening bolt M30 Steel 2239 (X22CrMoV57)	Length (mm)	Max.number of plates M30
3232411073	3232411053	1050	112
3232411075	3232411054	1650	193
3232411077	3232411055	2250	274
3232411079	3232411056	2850	355
3232411081	3232411057	3450	400
3232411082	3232411062	**	

* Length acc. To order : max 3600 mm

** Length acc. To order : max. 3500 mm

Pos. no.	Part number	Name	Comments
23	3223911451	Wearing washer	
24	3232429002	Guide washer	
25	3223448971	Lock washer	
26	3223448951	Nut	M30
27	3223420201	Nut	M30, Extra nut for TUV
28	1995101092	Plastic tube	34/32, LDPG, grey
29	3232428321	Protecting tube	
30	3223448631	Protecting tube	
31	3232428351	Guide ring	
32	3223448641	Protective cover	
33	3232461513	Connection	76/63.5 mm
34	3223961514	Connection	76/63.5 mm with Dive tube
35	3232461511	Connection	76mm
36	3232461512	Connection	76/63.5 mm with Dive tube
37		Transition plate	
38		Channel plates	
39		End plate II	
50		Connection plate	

Table 29. Connection plate

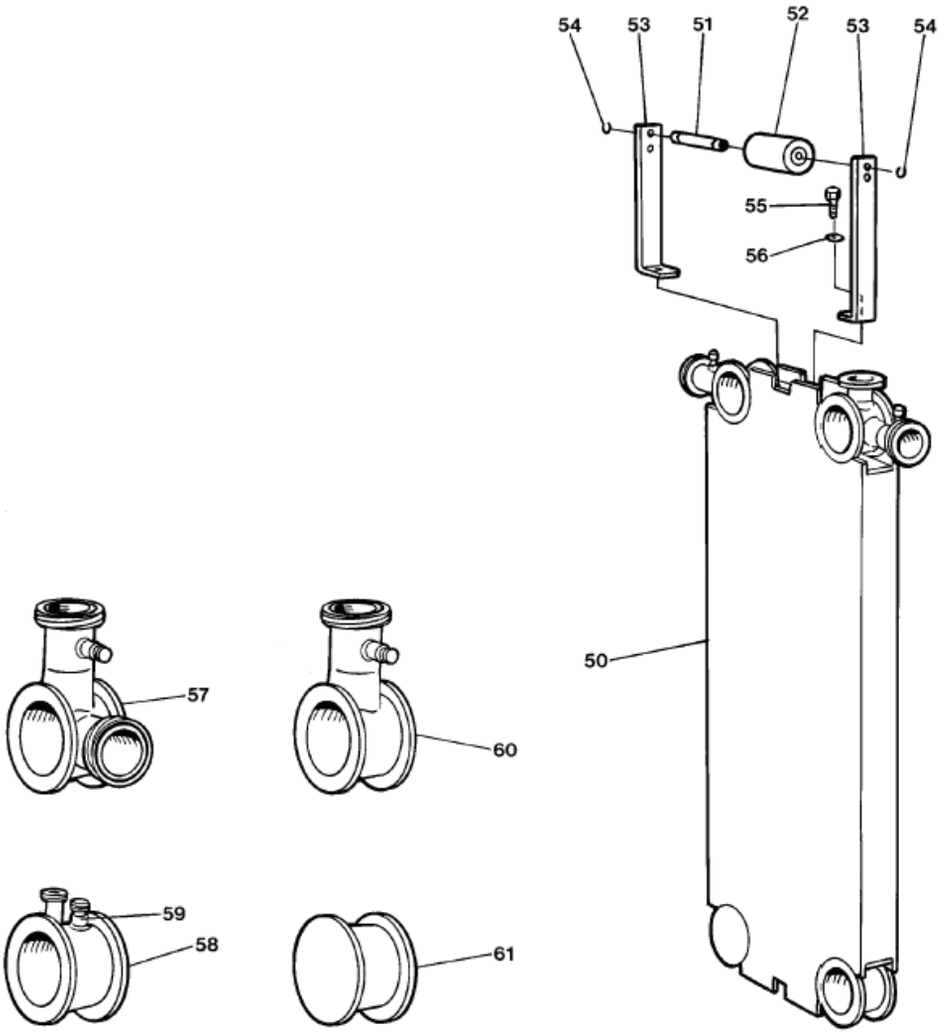

Pos. no.	Part number	Name	Comments
50	3232125011	Connection plate	
51	3232361341	Shaft	
52	3232361371	Wheel	
53	3232361351	Holder	
54	99013301	Safety ring	
55	22104603	Screw	M6S 12x30
56	22310135	Washer	BRB 13x24
57	3232550122	Double corner	63.5 mm
	3232552143	Double corner	63.5 mm, with Dive tube
58	3232551041	Through passage	
	3232550051	Through passage	With Dive tube and Nib
59	3135000201	Ventilating valve	R3/4"
60	3232550111	Single corner	63.5 mm
	3232550112	Single corner	63.5 mm, with Dive tube
61	3232552112	Blind corner	

Table 30. Gaskets for H7

Qualities		NBRP	EPDMF	NBRHTF
Colour marking		1 Blue	2 Grey	3 Blue
Channel plate gasket				
End plate gasket I		3226416146	3226416128	3226416127
End plate gasket II				
1 set consists of :		3226416646	3226416628	3226416627
2 Gasket heads		3226416846	3226416828	3226416827
1 Channel plate gasket		3226416146	3226416128	3226416127

Qualities		NBRP	EPDMF	NBRHTF
Colour marking		1 Blue	2 Grey	3 Blue
Ring gaskets for corner				
H7- RC & H7-RM		3226416046	3226416028	3226416027
for RC- and RM frame plate		3226416096	3226416078	3226416077
Transition plates (only for H7-FMC)				
Ring gaskets (1 piece required for each port hole)		3233064196	3233064178	3233064177
Collars (1 piece required for each port hole)				
Stainless steel	3232475061			
Plate gaskets				
1 Channel plate gasket		3226416146		3226416127
2 Gasket heads (or less)		3226416846		3226416827

Not manufactured anymore

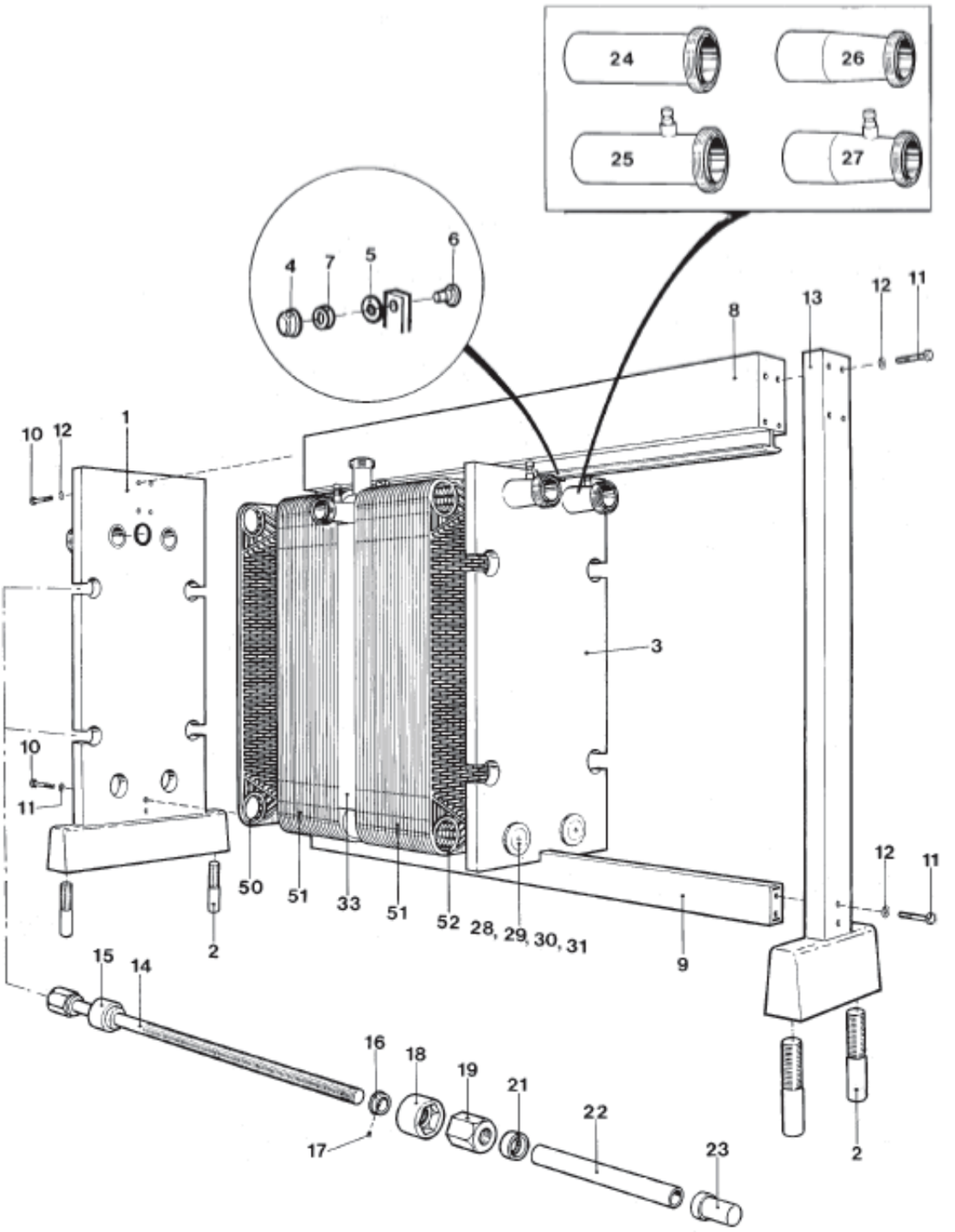

Pos. no.	Qty	Part number	Name
1	1	3226540891	Frame plate
2	2	3226424061	Foot
3	1	3226540921	Pressure plate
Required for each pressure plate			
4	1	3226521631	Wheel
5	1	3226511161	Bearing disc
6	1	3226411211	Shaft
7	1	52840203	Needle bearing nki 20/16

Pos. no. 8 Carrying bar	Pos. no. 9 Guiding bar	Length (mm)	Max.number of plates *
Part numbers			Plate thickness 0.8mm
3226542801	3232340012	1200	94
3226542802	3232340014	1800	169
3226542803	3232340016	2400	244
3226542804	3232340018	3000	319
3226542805	3232340021	3600	394
	3232340022	< 3600 acc. to order	394
3226542806	3232340001	4200	469
3226542807		Acc. to order	600
	3232340002	> 4200 acc. to order	600

* When conncting plates. Reduce max. number of plates with 13 plates/connecting plate

Pos. no.	Qty	Part number	Name
Required for each carrying bar			
10	2	22104611	Screw m6s m12x70
11	2	22104613	Screw m6s m12x90
12	4	22310135	Washer brb 13x24
Required for each guiding bar			
10	2	22104611	Screw m6s m12x70
11	2	22104613	Screw m6s m12x90
12	4	22310135	Washer brb 13x24
13	1	3226540341	Supporting column
2	2	3226424061	Foot

Table 31. Tightening bolt, M39

Pos. no. 14	Length (mm)	Max.number of plates *
		Plate thickness 0.8mm
3226540601	1050	89
3226540602	1650	164
3226540603	2250	239
3226540604	2850	314
3226540605	3450	389
3226540606	< 3450 acc. to order	600
Required for each tightening bolt:		
Pos. no.	**Qty**	**Part number**	**Name**
15	1	3226423101	Bearing box
16	1	3226540581	Stop ring
17	2	26009301	Stop screw
18	1	3226540641	Lock washer
19	1	3226540631	Nut
	1	3226540621	Nut (only when tuv-approved)
21	1	3223920571	Guide ring
22	1	3223920581	Protecting tube
23	1	3226540651	Protecting cap

Table 32. Connections

Required for each connection ø101.6 mm			
Pos. no.	Qty.	Part number	Name
24 Alt1	1	3226541211	Tube
		3226541212	Tube (for usa)
25 Alt2	1	3226541221	Tube with thermometer boss
		3226541223	Tube with thermometer boss (for usa)
			Required for each connection ø76.1 mm
26 Alt3	1	3226541231	Reducing tube
		3226541232	Reducing tube (for usa)
27 Alt4	1	3226541241	Reducing tube with thermometer boss
		3226541242	Reducing tube with thermometer boss (for usa)

Table 33. Blind connection

Pos. no.	Qty.	Part number	Name
28	1	3226540811	Blind cover
29	2	3226540831	Securing plate
30	1	3226540841	Cover
31	1	99007307	Screw
33			Connecting plate
50			End plate I
51			Channel plates
52			End plate ii

Table 34. Tools

Part number	Name
3222031002	Rachet spanner nv80, gedore 31
3232481001	Pneumatic tightening unit
3223448451	Hand tool (for regasketing)
3131709351	Spanner for pipe union

* when connecting plates : reduce max. Number of plates with 13 plates / connecting plate

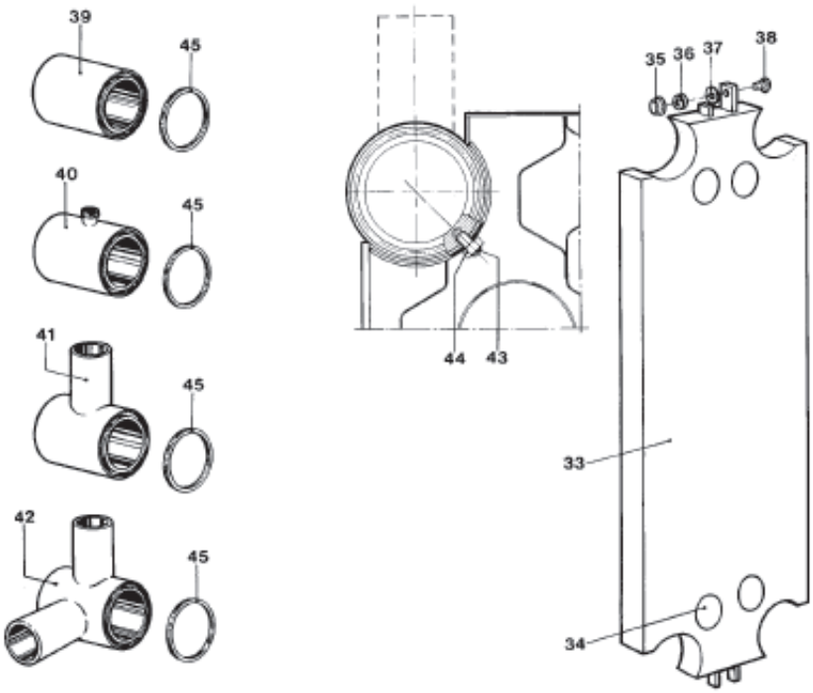

Pos. no.	Qty	Part number	Description
33	X	3226542511	Connecting plate
Required for each connecting plate			
34	4	3226542681	Covering washer
35	1	3226521631	Wheel
36	1	52840203	Needle bearing nki 20/16
37	1	3226511161	Bearing disch
38	1	3226411211	Shaft
	X	3226542181	Blind corner
39	X	3226542232	Corner with through-passage
	X	3226542233	Corner with through-passage (for usa)
40	X	3226542241	Corner with through passage with thermometer boss
	X	3226542242	Corner with through passage with thermometer boss (for usa)
41	X	3226542251	Corner with single connection ø76mm without bottom
	X	3226542252	Corner with single connection ø76mm without bottom (for usa)
41	X	3226542271	Corner with single connection ø76 mm with bottom
	X	3226542272	Corner with single connection ø76 mm with bottom (for usa)
42	X	3226542281	Corner with double connection ø76 mm
	X	3226542282	Corner with double connection ø76 mm (for usa)
			Corner with single connection ø101.6mm consists of:
	1	3226542271	Corner with single connection 76 mm
	1	3131709661	Cone
Required for each corner			
43	1	26008021	Screw sk6ss
44	1	22180322	Nut m6m m12
	1	22158133	Screw sk6ss (only for single connection ø101.6 mm)
Required for each corner pos. no. 41 (with bottom)			
45	1	*32265162XX	Gasket
45	1	*32239098XX	Gasket
Required for each corner pos. no. 39, 40, 41 (without bottom) and 42			
45	ALT 1 2	*32265162XX	Gasket
45	ALT 2 1	*32239098XX	Gasket
45	ALT 2 1	*32265162XX	Gasket

* see gasket for phe type h10

Table 35. Gaskets for H10

Quality		EPDMF	NBRHTF
Colour marking		2 Grey	3 Blue
Channel plate gasket, end plate gasket I			
			
		3226516128	3226516127
End plate gasket II			
1 set consists of:		3226516628	3226516627
1 Gasket head II		3226516878	3226516877
1 Gasket head I		3226516828	3226516827
1 Channel plate gasket		3226516128	3226516127
Ring gasket			
for corner and frame plate. See reverse side.(only for RC-frame)		3226516228	162950901
for corner, frame plate and pressure plate, See reverse side (only for RC-frame)		3223909878	3223909877
Transition plates for H10-FMC only			
Ring gaskets			
2 Ring gaskets I (or less)		3233064628	3233064627
2 Ring gaskets II (or less)		3233064678	3233064677
Collars (1 pc required for each port hole) Stainless Steel 3232114031			
Plate gaskets			
1 Channel plate gasket			3226516127
1 Gasket head I (or less)			3226516827
1 Gasket head II (or less)			3226516877
2 Diagonal support L=215mm *)		3226515181	3226515181

*) Part number 3226515181 (always in EPDMF) to be cut from 1 pc. AM20 field gasket 3223906128

Only for RC-frame
Ring gaskets

Frame and corner connections have ring gaskets which tighten against the end plates.
There are two different types of such gaskets, one with a high, the other with a low profile.
The higher one to face the back side of the through port corners of end plate I. (The salmon tail gasket groove around these corners has reduced depth along the inner part of the periphery.)

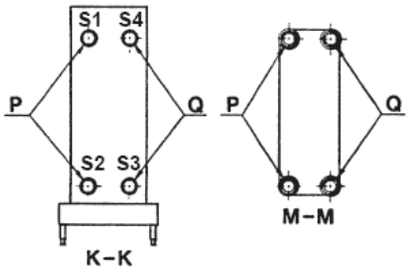

ANDPLATTA I END PLATE I ENDPLATTE I PLAQUE TERMINALE I	RINGPACKNINGAR RING GASKETS RINGDICHTUNGEN JOINTS ANNULAIRES	
	P	Q
A - PLATTA PLATE PLATTE PLAQUE	32239-0987-8 EPDM 32239-0989-6 NBR (NITRILE)	32265-1622-8 EPDM 32265-1624-6 NBR (NITRILE)
B - PLATTA PLATE PLATTE PLAQUE	32265-1622-8 EPDM 32265-1624-6 NBR (NITRILE	32239-0987-8 EPDM 32239-0989-6 NBR (NITRILE)



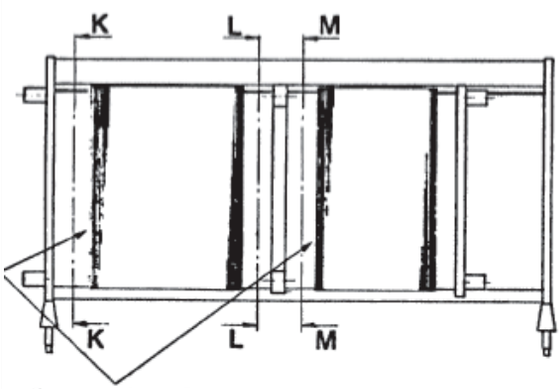

ANDPLATTA I ENDPLATTE I
END PLATE I PLAQUE TERMINALE I

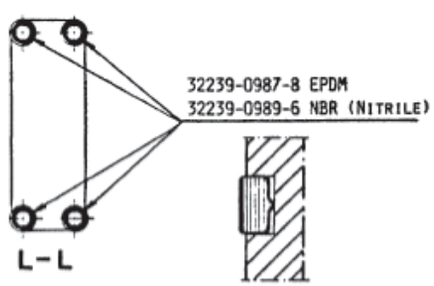

THE RIB TURNED TOWARDS THE CORNER

Not manufactured anymore

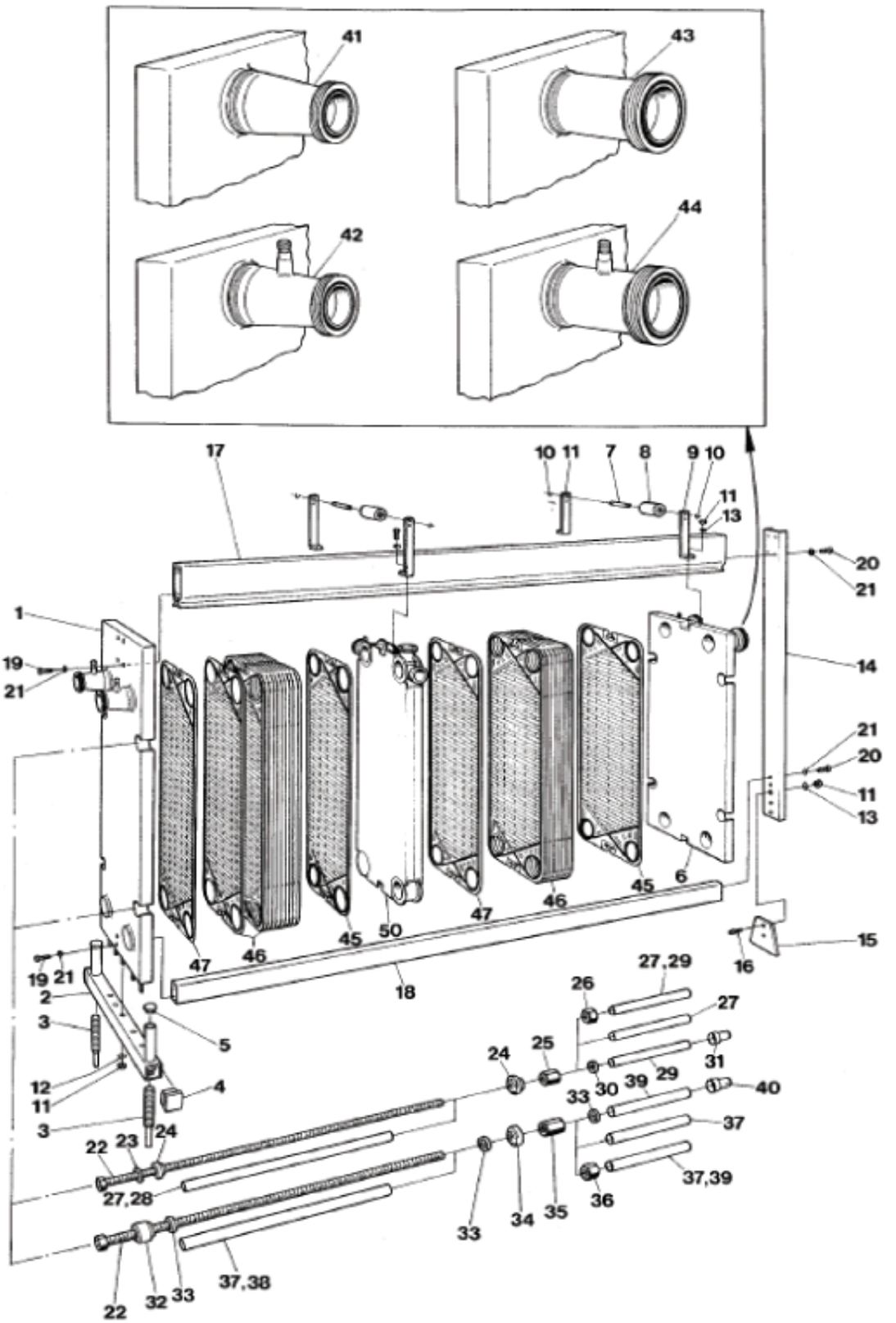

Pos. no.	Part number	Name	Comments
1	3232041002	Frame plate	
2	3232301641	Lower part	
3	3232301661	Levelling screw	L = 300
4	99013601	Square plug	Q8080
5	99013402	Seal plug	F33
6	3232083002	Pressure plate	
7	3232361341	Shaft	
8	3232361371	Wheel	
9	3232361331	Holder	
10	(99013301)	Safety ring	
11	22180340	Nut	M6 M16
12	3232301721	Washer	
13	22310137	Washer	BRB 17x30
14	3232201221	Supporting column	LC MAX = 3600 mm
15	3232201231	Plate	
16	221046303	Screw	M6S M16x40

Pos. no. 17 Carrying bar	Pos. no. 18 Guiding bar	Length (mm)	Max.number of plates
3232320381	3232340012	1200	111
3232320382	3232340014	1800	191
3232320383	3232340016	2400	271
3232320384	3232340018	3000	351
3232320385	3232340021	3600	431
3232320386	3232340022	*	
3226542806	3232340023	4200	511
3232320151	3232340173	4800	591
3226542807	3232340172	**	

Pos. no.	Part number	Name	Comments
19	22104613	Screw	M6S 12x90
20	22104606	Screw	M6S 12x40
21	22310135	Washer	BRB 13x24

Pos. no. 22 Tightening bolt			Length (mm)	Max.number of plates
M30 Steel 2317 (X22CrMoV121)	M39 Steel 2317 (X22CrMoV121)	M39 Steel 2239 (X22CrMoV57)		M30
3232411073	3232400091	3232400111	1050	105
3232411075	3232400092	3232400112	1650	185
3232411077	3232400093	3232400113	2250	265
3232411079	3232400094	3232400114	2850	345
3232411081	3232400095	3232400115	3450	425
3232411082			+	
	3232400096	3232400116	4050	
	3232400097	3232400117	4650	
	3232400101		++	

* Length acc. to order : max 3600 mm

** Length acc. to order : max. 5400 mm

\+ Length acc. to order : max. 5400 mm

++ Length acc. to order : max. 5250 mm

Pos. no.	Part number	Name	Comments
23	3223911451	Wearing washer	
24	3232428283	Lock washer	
25	3223448951	Nut	M30
26	3232420201	Nut	M30, Extra nut for TUV
27	1995101092	Plastic tube	34/32, LDPG, Grey
28	3232428321	Protecting tube	
29	3223448631	Protecting tube	
30	3232428351	Guide ring	
31	3223448641	Protective cover	
32	3232423001	Bearing box	
33	3223920571	Guide ring	
34	3232429151	Lock washer	
35	3232420211	Nut	M39
36	3232420181	Nut	M39, Extra nut for TUV
37	1995101093	Plastic tube	43/41, LDPE, Grey
38	3232428411	Protecting tube	
39	3223920581	Protecting tube	
40	3226540651	Protective cover	
41	3232460293	Connection	101.6/76 mm
42	3232460294	Connection	101.6/76 mm with Dive tube
43	3232460291	Connection	101.6 mm
44	3232460292	Connection	101.6 mm with Dive tube
45		Transition plate	
46		Channel plates	
47		End plate II	
50		Connection plate	

Table 36. Connection plate

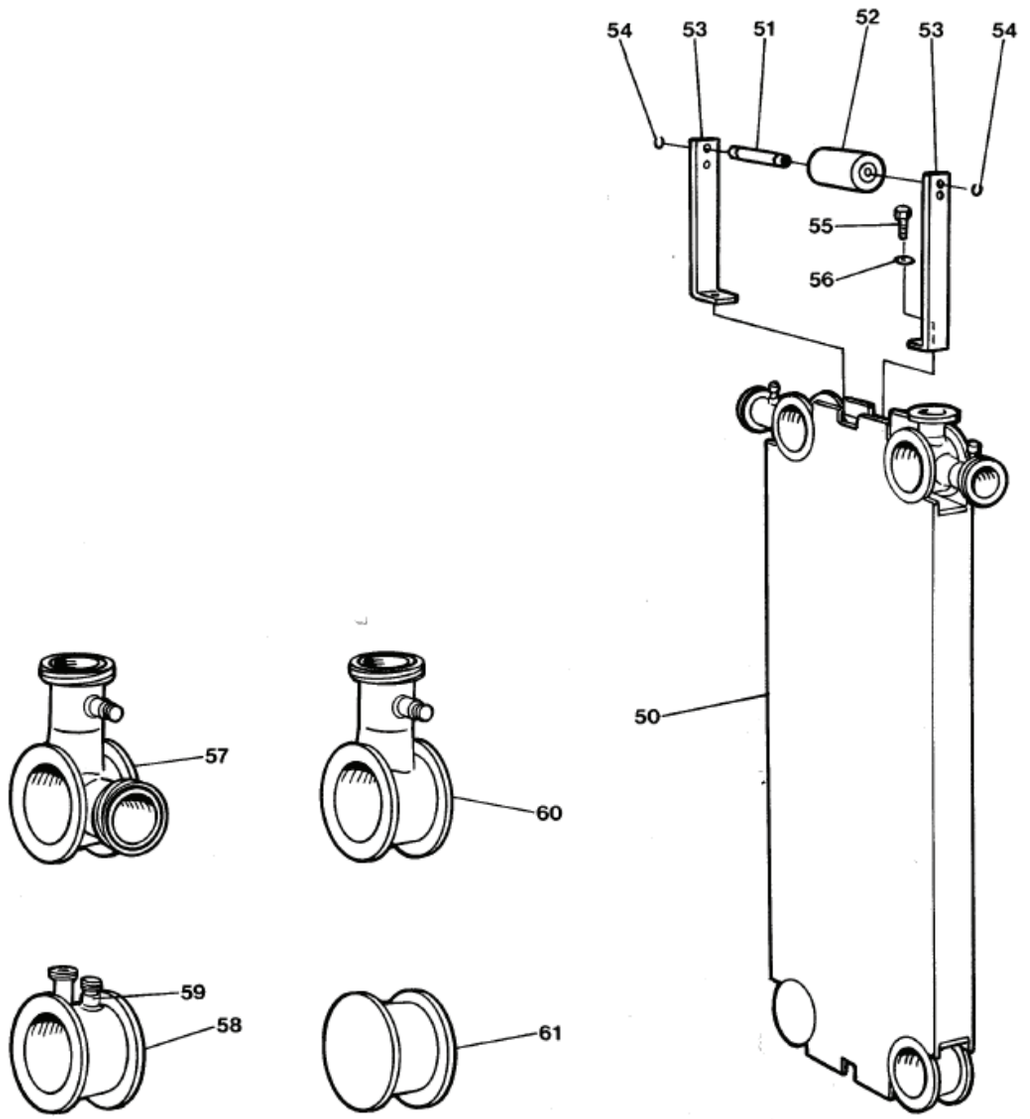

Pos. no.	Part number	Name	Comments
50	3232128001	Connection plate	
51	3232361341	Shaft	
52	3232361371	Wheel	
53	3232361332	Holder	
54	(99013301)	Safety ring	
55	(22104603)	Screw	M6S 12x30
56	22310135	Washer	BRB 13x24
57	3232553172	Double corner	76 mm
	3232552141	Double corner	76 mm, with Dive tube
58	3232553161	Through passage	
	3232552121	Through passage	With Dive tube and Nib
59	3135000201	Ventilating valve	R3/4"
60	3232552131	Single corner	76 mm
	3232552132	Single corner	76 mm, with Dive tube
61	3232552111	Blind corner	

Not manufactured anymore

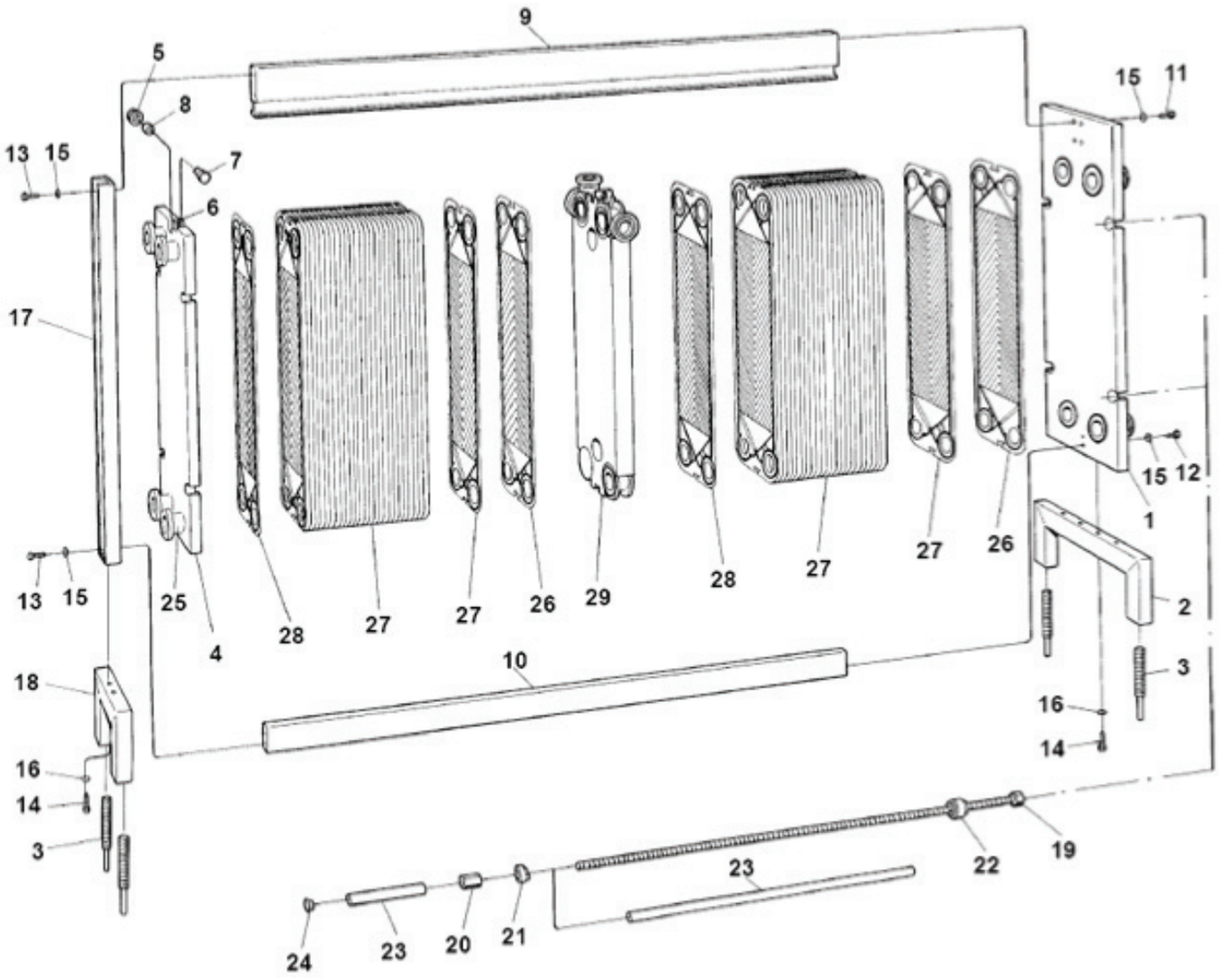

Pos	Part number	Name	Comments
1	162098101	Frame plate	
2	162716901	Foot	
3	3232301661	Levelling screw	
4	162098201	Pressure plate	
5	162078101	Wheel	
6	26008004	Stop screw	SK6SS 6x8-A4
7	162078001	Shaft	
8	52840203	Needle bearing	

Pos. no. 9 Carrying bar	Pos. no. 10 Guiding bar	Length (mm)	* Max. no. of plates 0.8 mm
162315001	3232340012	1200	115
162315002	3232340014	1800	186
162315003	3232340016	2400	277
162315004	3232340018	3000	358
162315005	3232340021	3600	400

Pos. no.	Part number	Name	Comments
11	22104605	Screw	M6S M12x100
12	22104611	Screw	M6S M12x70
13	22104606	Screw	M6S M12x40
14	221046303	Screw	M6S 16x40
15	22310135	Washer	BRB 13x24
16	22310137	Washer	BRB 17x30
17	162728101	Supporting column	
18	162717401	Foot	

Pos. no. 19 Tightening bolt M30	Length (mm)	* Max. no. of plates 0.8 mm
3232411073	1050	107
3232411075	1650	188
3232411077	2250	269
3232411079	3850	350
3232411081	3450	400

Pos. no.	Part number	Name
20	3232420243	Nut
21	3223448971	Lock washer
22	162415701	Bearing box
23	1995101092	Plastic tube
24	99015201	Plug

Table 37. Connection

Pos. no.	Part number	Connection	Comment
25	162533401	Pipe	
	3226416096	Gasket	NBR
	3226416078	Gasket	EPDM
26		End plate I	
27		Channel plates	
28		End plate II	
29		Connection plate	

Table 38. Tools

Part number	Name
3222031015	Spanner
3232481131	Wrench
3232481051	Spiral hose
3232481111	Air control unit
3226812182	Socket
3223448451	Gasketing tool

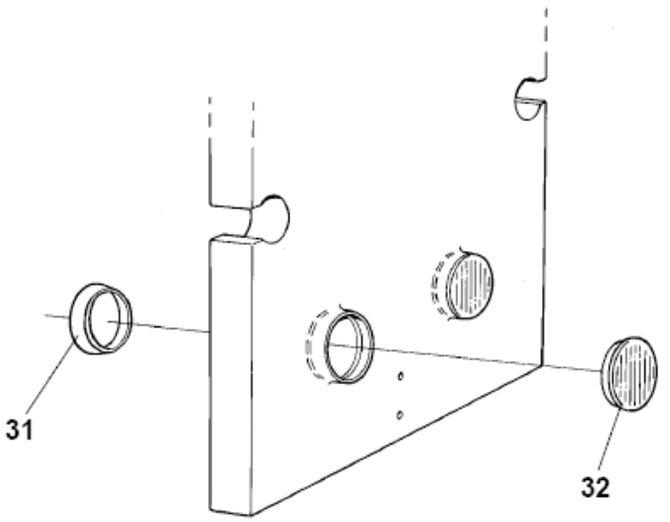

Table 39. Blind connection

Pos. no	Part number	Name
31	162530902	Blind washer
32	99013802	Seal plug

* When connection plates: Reduce max. number of plates with 12 plates / connection plate.

Table 40. Connection plate for SNAP H7-RM

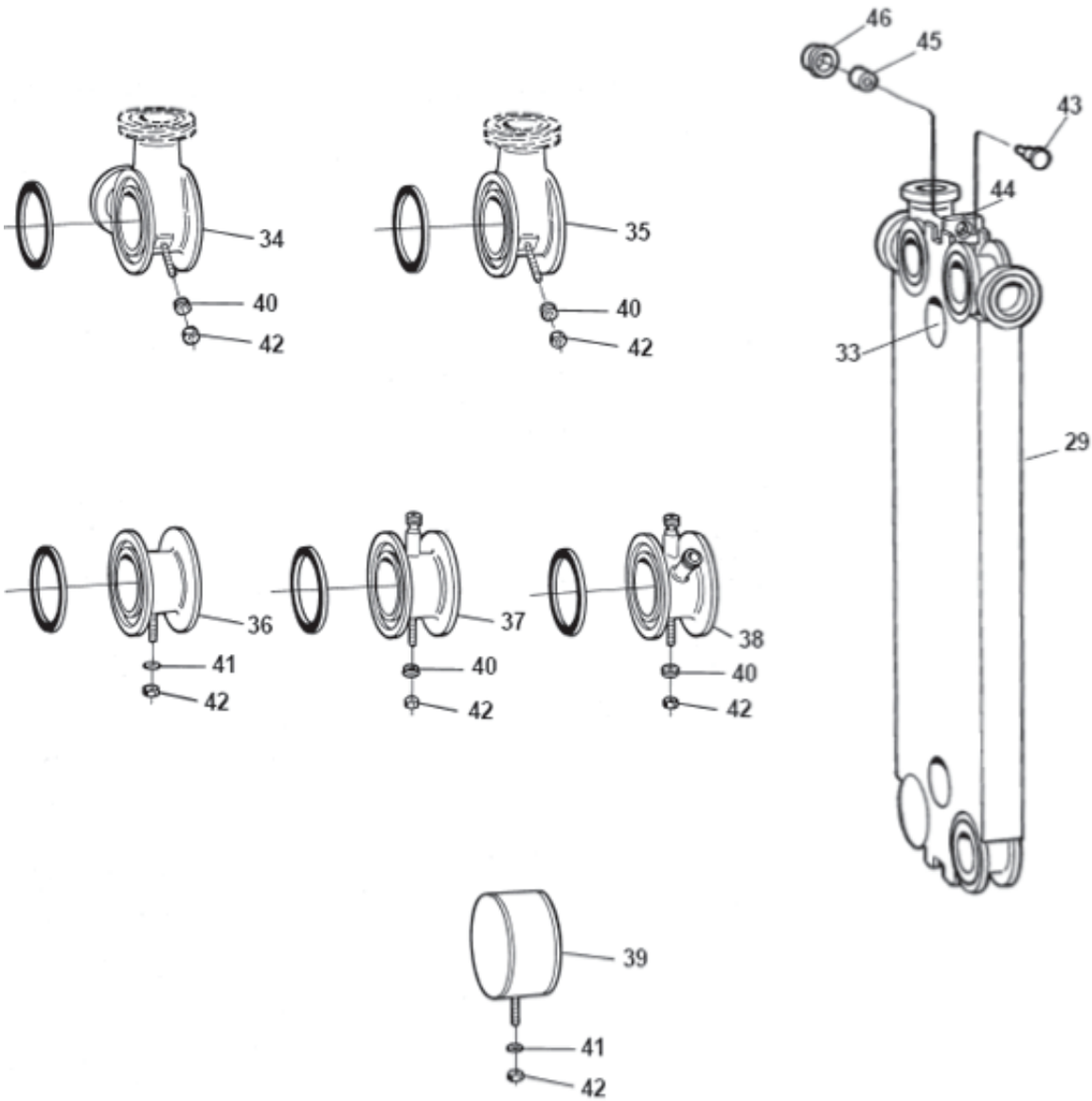

Pos. no.	Part number	Name	Comment
29	162071501	Connection plate	
33	162058401	Washer	
34	162531701	Double corner	
35	162540701	Single corner	Right
	162540702	Single corner	Left
36	162531801	Through passage	
37	162533301	Through passage	With Drive tube
38	162531401	Through passage	With Drive tube and Nib
39	162530401	Blind corner	
40	162059301	Washer	
41	22310161	Washer	BRB 10.5x22
42	22180329	Nut	M6M10
43	162078001	Shaft	
44	26009301	Stop screw	SK6SS 5x6
45	52840203	Needle bearing	NKI 20/16 INA
46	162078101	Wheel	

Table 41. Gaskets for H17

Qualities		EPDMF	NBRHTF
Colour marking		2 Grey	3 Blue
Channel plate gasket, end plate gasket I			
		3226416128	3226416127
End plate gasket II			
1 set consists of: 2 Gasket head 1 Channel plate gasket		3226416628 3226416878 32264161128	3226416627 3226416827 32264161127
Ring gaskets for corner			
H7-RC H7-RM for RC- and RM frame plate		3226416028 3226416078 3226416078	3226416027 162950801 162950801
Transition plates (only for H7-FMC)			
Ring gaskets (1 piece required for each port hole) **Collars** (1 piece required for each port hole) Stainless steel 3232475061		3233064178	323364177
Plate gasket			
1. Channel plate gasket 2. Gasket heads (or less)			3226416127 3226416827

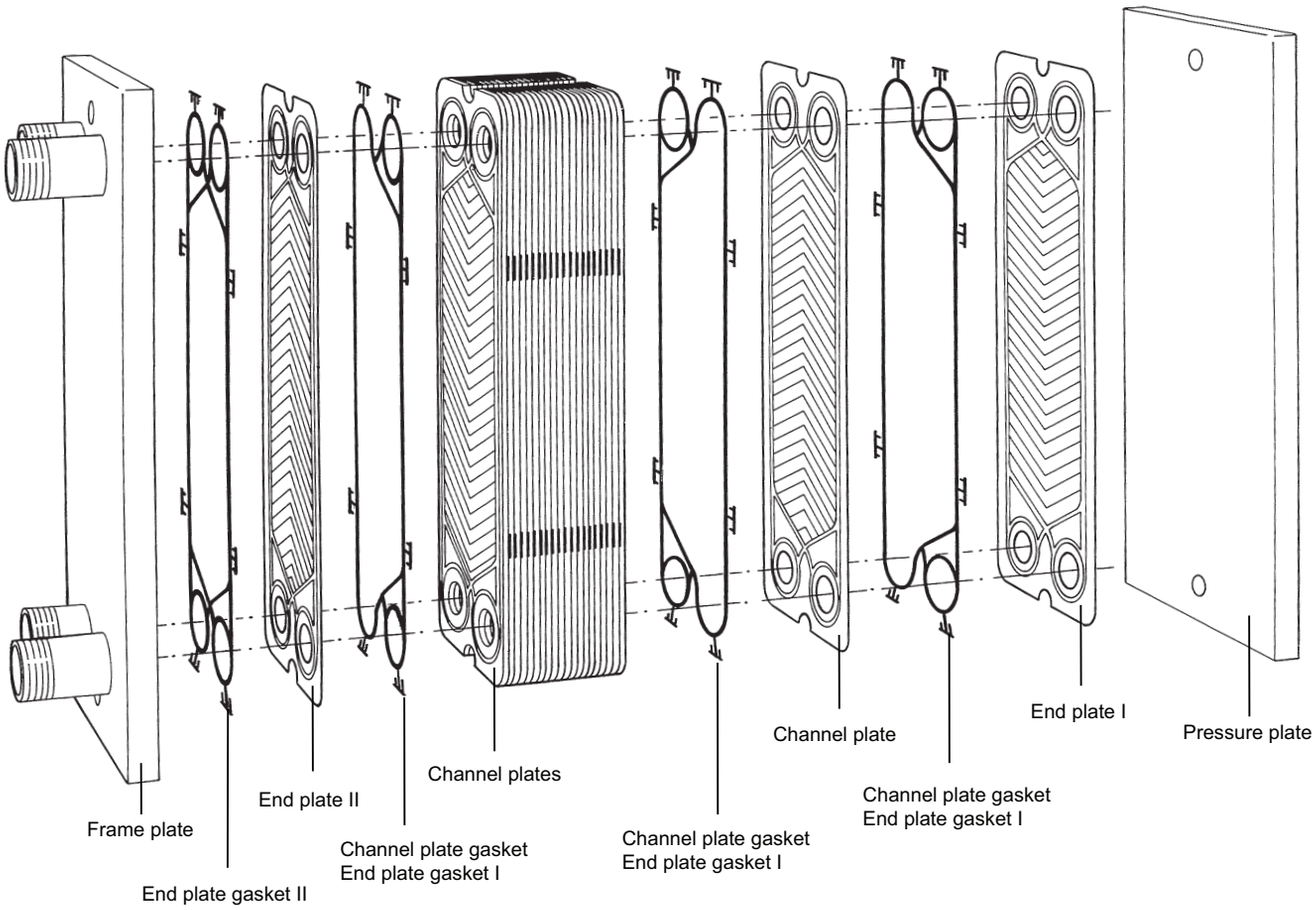

Qualities	Gasket type	Part numbers		Colour marking
		End plate gasket II (or 2 pieces of channel plate gasket)	Channel plate gasket End plate gasket I	
NBRP	Clip-On	390084017106	3226309546	1 blue
NBRB	Clip-On		3900171307	2 blue
NBRFF	Clip-On	390084017127	3900545827	1 blue + 1 pink
EPDMF	Clip-On	390084017102	replaced by EPDMFF	2 grey
EPDMFF	Clip-On	390084017126	3900545726	1 grey + 1 pink

Connection gasket for pressure plate / FG/FM-frame			
Qualities		NBRP	EPDMF
Colour marking		1 blue	2 grey
Flat	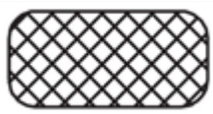	3226309846	3226309828
Ribbed	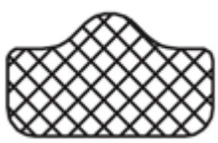	3226309796	3226309778

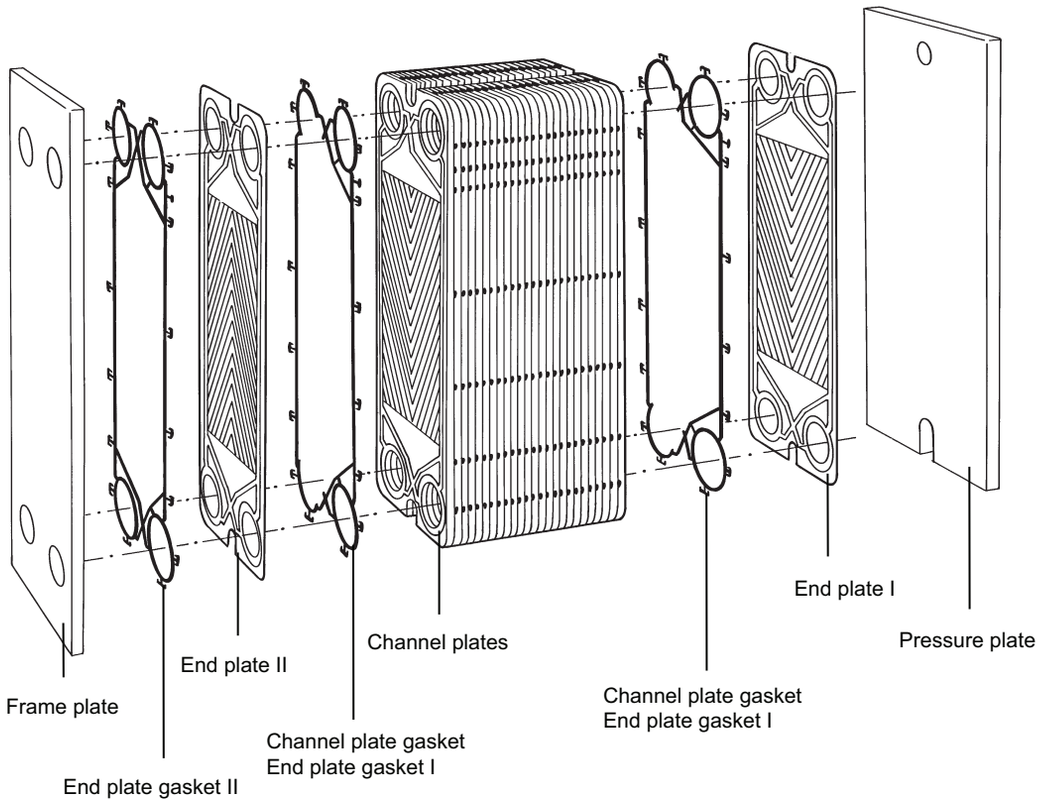

Qualities	Gasket type	Part numbers		Colour marking
		End plate gasket II (or 2 pieces of channel plate gasket)	Channel plate gasket End plate gasket I	
NBRP	Clip-On	390084017206	3233014046	1 blue
NBRB	Clip-On	(use NBRP) 390084017206	3900172607	2 blue
EPDMF	Clip-On	390084017202		2 grey
EPDMFF	Clip-On	390084017226	3900172626	1 grey + 1 pink

Transition plates				
Qualities			NBRP	EPDMFF
Colour marking			1 blue	1 grey + 1 pink
* **Ring gaskets**		Ring gaskets	3233063696	3900737026
Collars				
Stainless steel	3232474821			
End plate gasket II		Collars	390084017206	390084017226
		Channel plate gasket		

*** Note!** These parts only needed if in the plate pack list - is a transition plate specified, i.e. code DD=41-55

Note! Please use Alfa Laval GC5 FDA approved glue for transition plates. Item no. 3350021702.

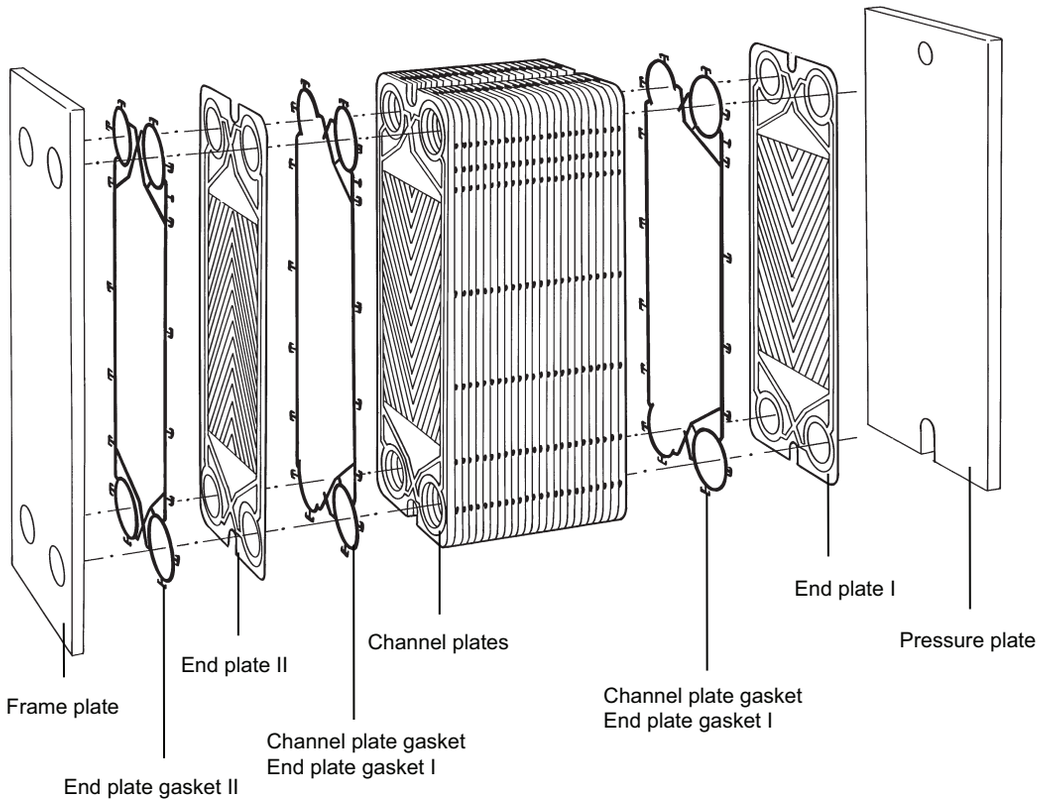

Qualities	Gasket type	Part numbers		Colour marking
		End plate gasket II (or 2 pieces of channel plate gasket)	Channel plate gasket end plate gasket I	
NBRP	Clip-On	3233014246	3233014146	1 blue
NBRB	Clip-On		3900173907	2 blue
NBRFF	Clip-On	32330142227	3900561427	1 blue + 1 pink
NBRHTF	Clip-On	3233014227	3233014127	3 blue
EPDMF	Clip-On	3233014228	3233014128	2 grey
EPDMFF	Clip-On	32330142226	3900561426	1 grey + 1 pink
FKMFF	Clip-On	3900827630	3900561430	1 purple + 1 pink

Transition plates					
Qualities			NBRP	NBRFF	EPDMFF	FKMFF
Colour marking			1 blue	1 blue + 1 pink	1 grey +1pink	1 purple +1pink
* **Ring gaskets**		Ring gaskets	3233066346	3900561527	3900561526	3900561530
Collars						
Stainless steel	3233085351					
Titanium	3233085352	Collars				
Hast.C	3233085354					
SMO	3233085355					
1 End plate gasket II		Channel plate gasket	3233014246	32330142227	32330142226	3900827630

*** Note!** These parts only needed if in the plate pack list - is a transition plate specified, i.e. code DD=41-55
Note! Please use Alfa Laval GC5 FDA approved glue for transition plates. Item no. 3350021702.

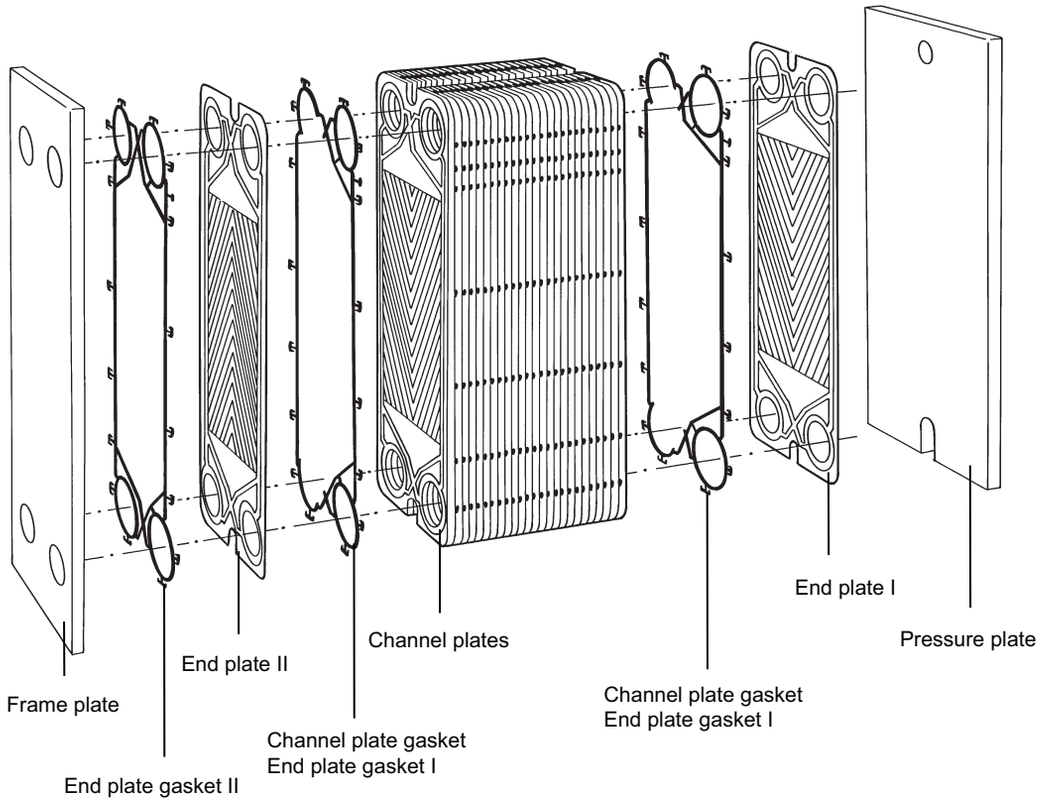

Qualities	Clip-On	Part numbers		Colour marking
		End plate gasket II (or 2 pieces of channel plate gasket)	Channel plate gasket end plate gasket I	
NBRP	Clip-On	390084017306	3233016546	1 blue
NBRB	Clip-On	(2 pieces) 3900175607	3900175607	2 blue
NBRHTF	Clip-On	390084017309	3233016527	3 blue
EPDMF	Clip-On	390084017302	3233016528	2 grey

Transition plates				
Qualities			NBRP	EPDMF
Colour marking			1 blue	2 grey
* **Ring gaskets**		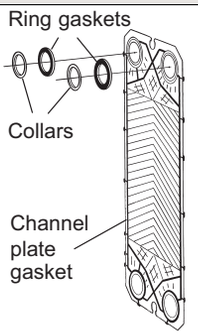	3233065146	3233065128
Collars				
Stainless steel	3232473671			
Titanium	3232473672			
Hast.C	3232473674			
SMO	3232473675			
End plate gasket II				
	Clip-On Rib		390084017306	390084017302

*** Note!** These parts only needed if in the plate pack list - is a transition plate specified, i.e. code DD=41-55
Note! Please use Alfa Laval GC5 FDA approved glue for transition plates. Item no. 3350021702.

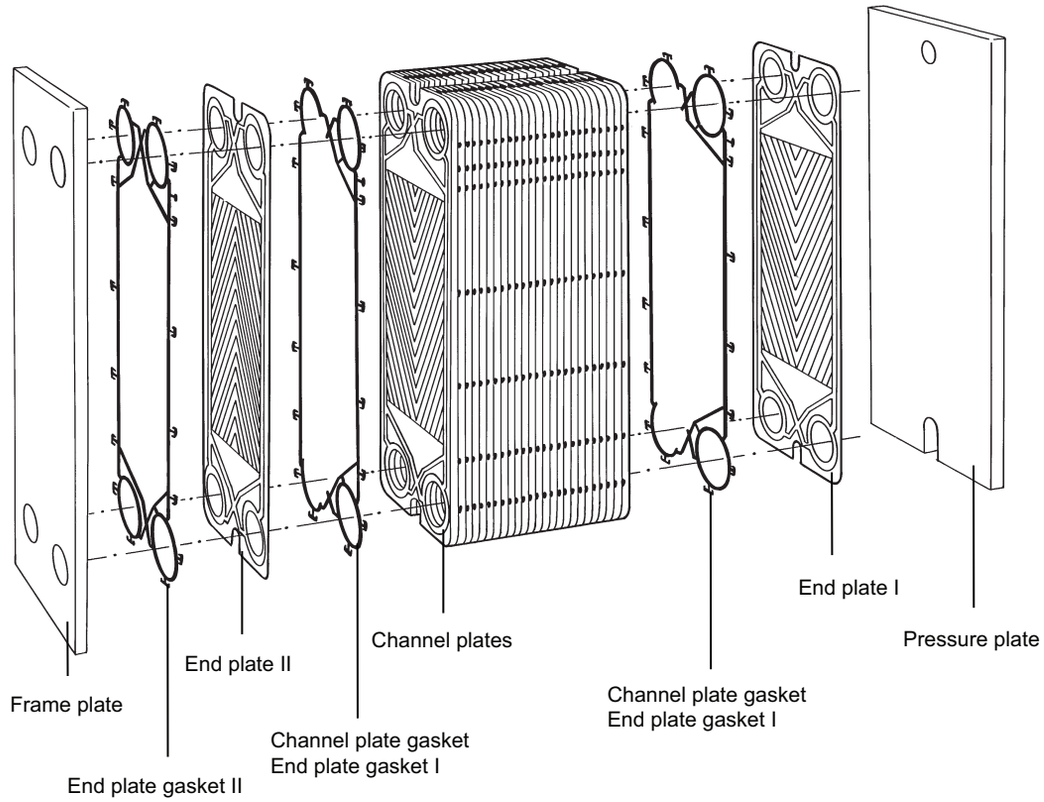

Qualities	Gasket type	Part numbers		Colour marking
		End plate gasket II (or 2 pieces of channel plate gasket)	Channel plate gasket end plate gasket I	
NBRP	Clip-On	390084017406	3233015096	1 blue
NBRB	Clip-On	(2 pieces) 3900176907	3900176907	2 blue
NBRFF	Clip-On	390084017427	3900561627	1 blue + 1 pink
NBRHTF	Clip-On	390084017409	3233015077	3 blue
EPDMFF	Clip-On	390084017426	3900561626	1 grey + 1 pink
FKMFF	Clip-On	390084017430	3900825730	1 purple + 1 pink

Transition plates					
Qualities			NBRP	EPDMFF	NBRFF
Colour marking			1 blue	1 grey + 1 pink	1 blue + 1pink
* **Ring gaskets**		Ring gaskets	3233064996	3900561726	3900561727
Collars					
Stainless steel	3900771801				
Titanium	3900771802	Collars			
Hast. C	3900771804				
SMO	3900771805				
End plate gasket II		Channel plate gasket			
	Clip-on		390084017406	390084017426	390084017427

*** Note!** These parts only needed if in the plate pack list - is a transition plate specified, i.e. code DD=41-55
Note! Please use Alfa Laval GC5 FDA approved glue for transition plates. Item no. 3350021702.

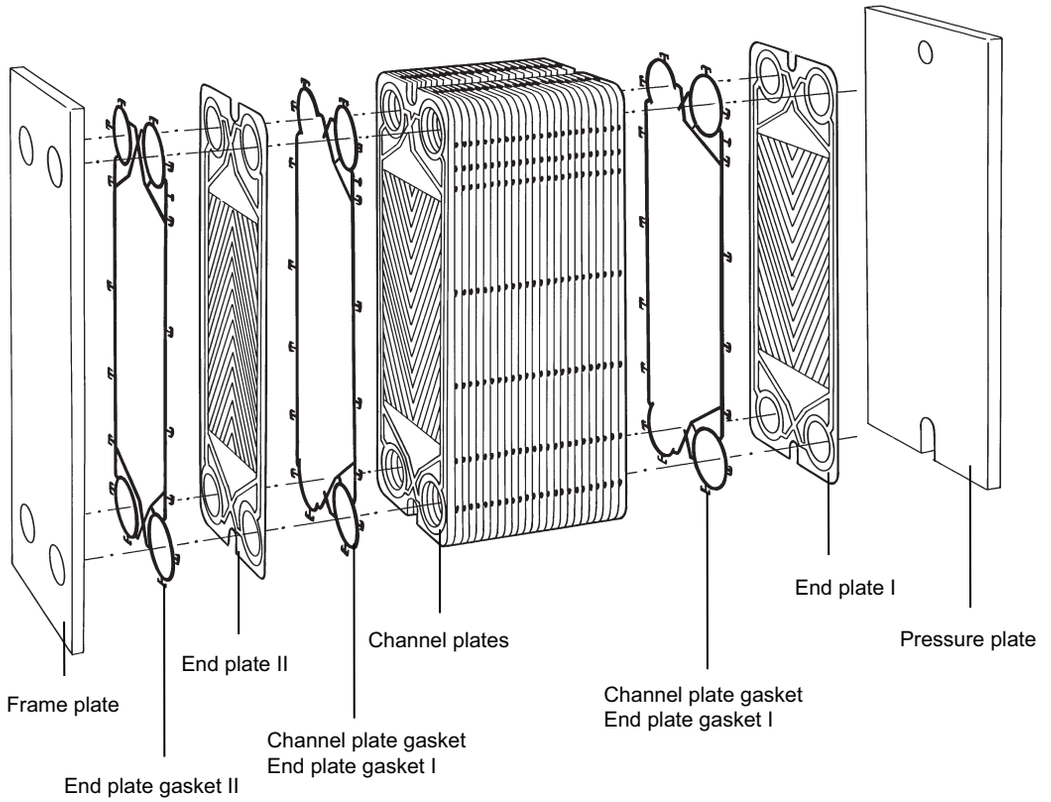

Qualities	Gasket type	Part numbers		Colour marking
		End plate gasket II (or 2 pieces of channel plate gasket)	Channel plate gasket end plate gasket I	
NBRP	Clip-On	(2 pieces) 3900487206	3900487206	1 blue
NBRB	Clip-On	(2 pieces) 3900487207	3900487207	2 blue
NBRFF	Clip-On	(2 pieces) 3900487227	3900487227	1 blue + 1 pink
EPDMFF	Clip-On	(2 pieces) 3900487226	3900487226	1 grey + 1 pink

Transition plates				
Qualities			NBRFF	EPDMFF
Colour marking			1 blue	2 grey
* **Ring gaskets** (1 pcs. required for each port hole)		Ring gaskets	3900487627	3900487626
Collars (1 pcs. required for each port hole)		Collars		
Stainless steel	3900493201			
Titanium	3900493202			
Alloy 254	3900493203	Channel plate gasket		
Channel plate gaskets, 2 pcs.				
	Clip-on		3900487227	3900487226

*** Note!** These parts only needed if in the plate pack list - is a transition plate specified, i.e. code DD=41-55
Note! Please use Alfa Laval GC5 FDA approved glue for transition plates. Item no. 3350021702.

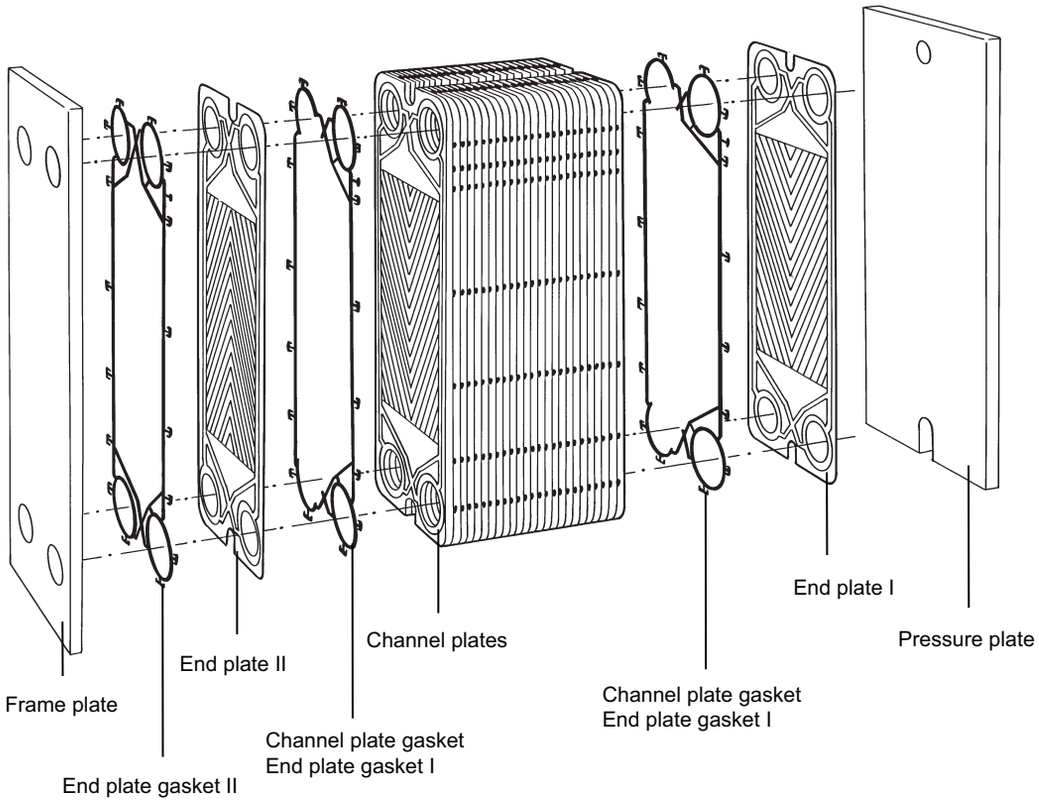

Qualities	Gasket type	Part numbers		Colour marking
		End plate gasket II (or 2 pieces of channel plate gasket)	Channel plate gasket End plate gasket I	
NBRP	Clip-On LP	390084002806*	3900767106	1 blue
NBRP	Clip-On HP	390084002806	3900778806	1 blue
NBRB	Clip-On LP	390084002807*	3900767107	2 blue
NBRB	Clip-On HP	390084002807	3900778807	2 blue
NBRFF	Clip-On LP	390084002827*	3900771927	1 blue + 1 pink
EPDMFF	Clip-On LP	390084002826*	3900771926	1 grey + 1 pink

*Note! consists of 1 end plate gasket II (do not use 2 channel plate gaskets).

Transition plates				
Qualities			NBRFF	EPDMFF
Colour marking			1 blue	2 grey
* **Ring gaskets** (1 pcs. required for each port hole)		Ring gaskets	3900770627	3900770626
Collars (1 pcs. required for each port hole)				
Stainless steel	3900770702	Collars		
Titanium	3900770703			
Alloy 254	3900770705			
End plate gasket II		Channel plate gasket		
	Clip-on		390084002827	390084002826

*** Note!** These parts only needed if in the plate pack list - is a transition plate specified, i.e. code DD=41-55
Note! Please use Alfa Laval GC5 FDA approved glue for transition plates. Item no. 3350021702.

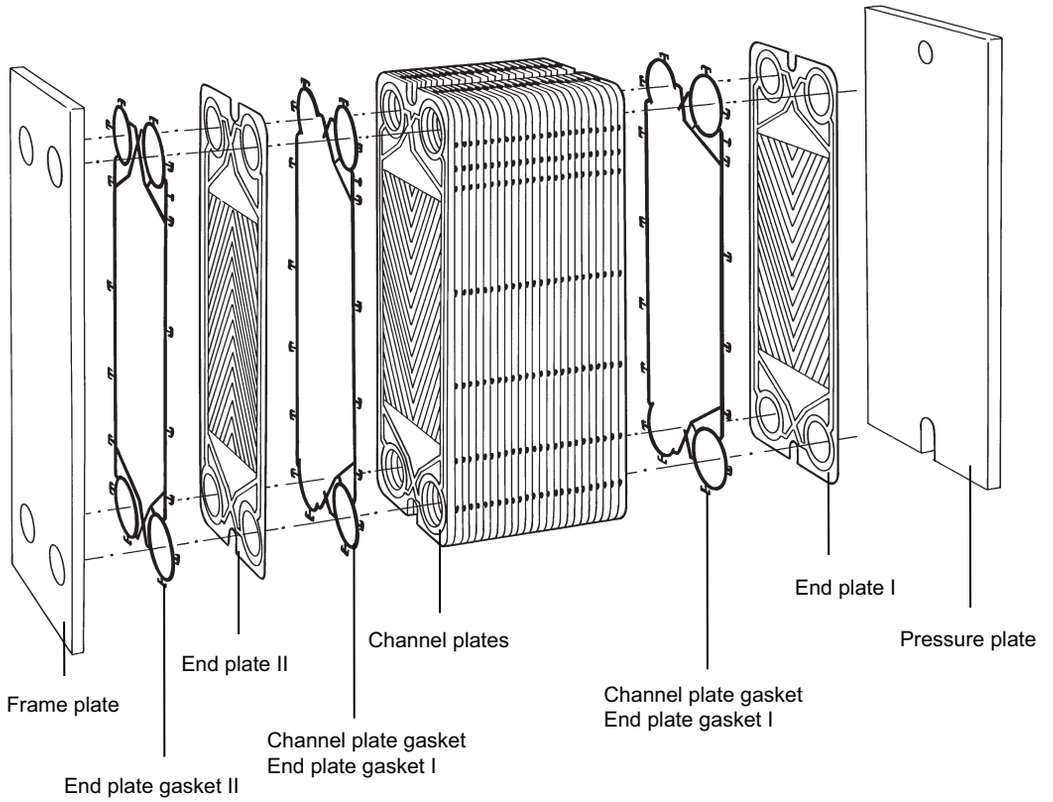

Qualities	Gasket type	Part numbers		Colour marking
		End plate gasket II (or 2 pieces of channel plate gasket) *	Channel plate gasket end plate gasket I	
NBRP	Clip-On	(2 pieces) 3233018196	3233018196	1 blue
NBRB	Clip-On	(2 pieces) 3900178807	3900178807	2 blue
EPDMF	Clip-On	(2 pieces) 3233018128	3233018128	2 grey

Transition plates				
Qualities			NBRP	EPDMF
Colour marking			1 blue	2 grey
* **Ring gaskets** (1 pcs. required for each port hole)		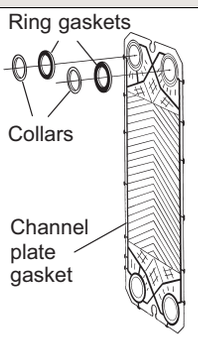	3233018246	3233018228
Collars (1 pcs. required for each port hole)				
Stainless steel	3233084621			
Titanium	3233084622			
SMO	3233084625			
Channel plate gaskets, 2 pieces				
	Clip-On		3233018196	3233018128

*** Note!** These parts only needed if in the plate pack list - is a transition plate specified, i.e. code DD=41-55

Note! Please use Alfa Laval GC5 FDA approved glue for transition plates. Item no. 3350021702.

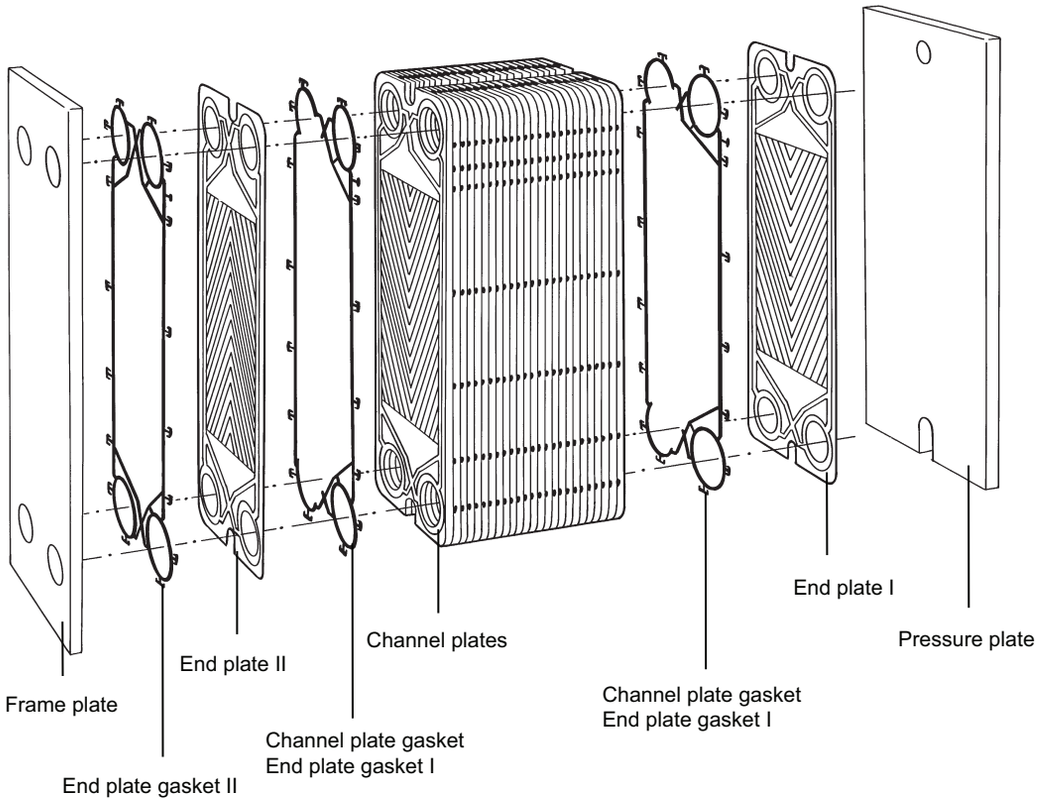

Qualities	Gasket type	Part numbers		Colour marking
		End plate gasket II (or 2 pieces of channel plate gasket) *	Channel plate gasket end plate gasket I	
NBRP	Clip-On	(2 pieces) 3233018046	3233018046	1 blue
NBRB	Clip-On	(2 pieces) 3900181307	3900181307	2 blue
EPDMF	Clip-On	(2 pieces) 3233018028	3233018028	2 grey

Transition plates				
Qualities			NBRP	EPDMF
Colour marking			1 blue	2 grey
* **Ring gaskets** (1 pcs. required for each port hole)		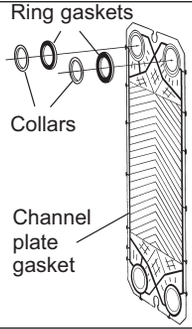	3233018096	3233018078
Collars (1 pcs. required for each port hole)				
Stainless steel	3233084501			
Titanium	3233084502			
SMO	3233084503			
Channel plate gaskets, 2 pieces				
	Clip-On		3233018046	3233018028

*** Note!** These parts only needed if in the plate pack list - is a transition plate specified, i.e. code DD=41-55

Note! Please use Alfa Laval GC5 FDA approved glue for transition plates. Item no. 3350021702.

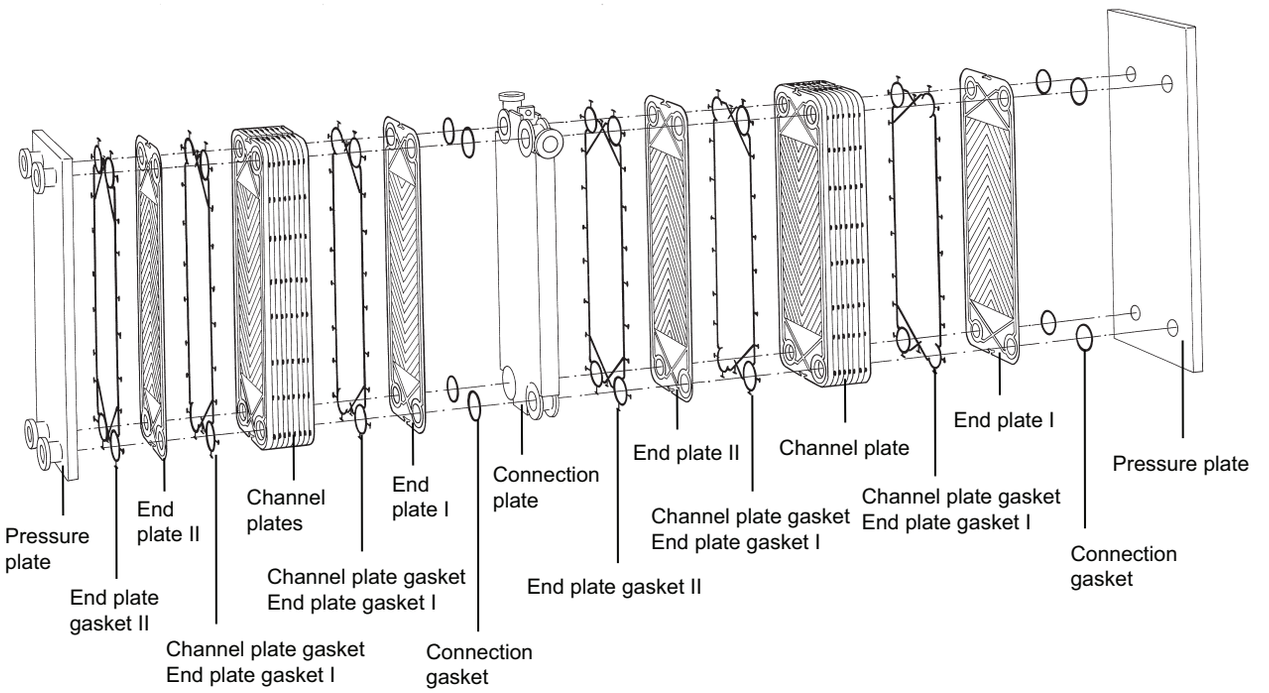

Qualities	Gasket type	Part numbers			Colour marking
		End plate gasket II (or 2 pieces of channel plate gasket)	Channel plate gasket end plate gasket I	Connection gasket	
NBRP	Clip-On	3223521096	3223521046	162958401	1 blue
EPDMF	Clip-On			162958402	2 grey

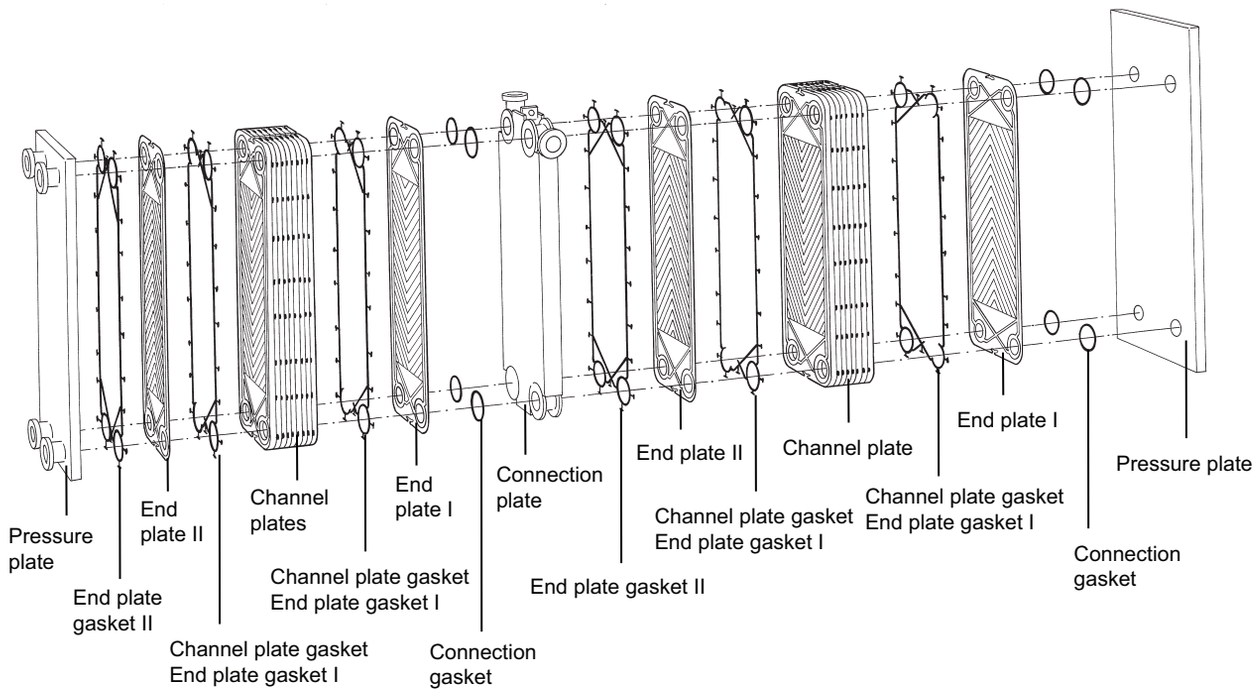

Qualities	Gasket type	Part numbers			Colour marking
		End plate gasket II (or 2 pieces of channel plate gasket)	Channel plate gasket end plate gasket I	Connection gasket	
EPDMFF	Clip-On	3900560926	3900560826	3450526202	1 grey + 1 pink
NBRFF	Clip-On	3900560927	3900560827	3450526201	1 blue + 1 pink

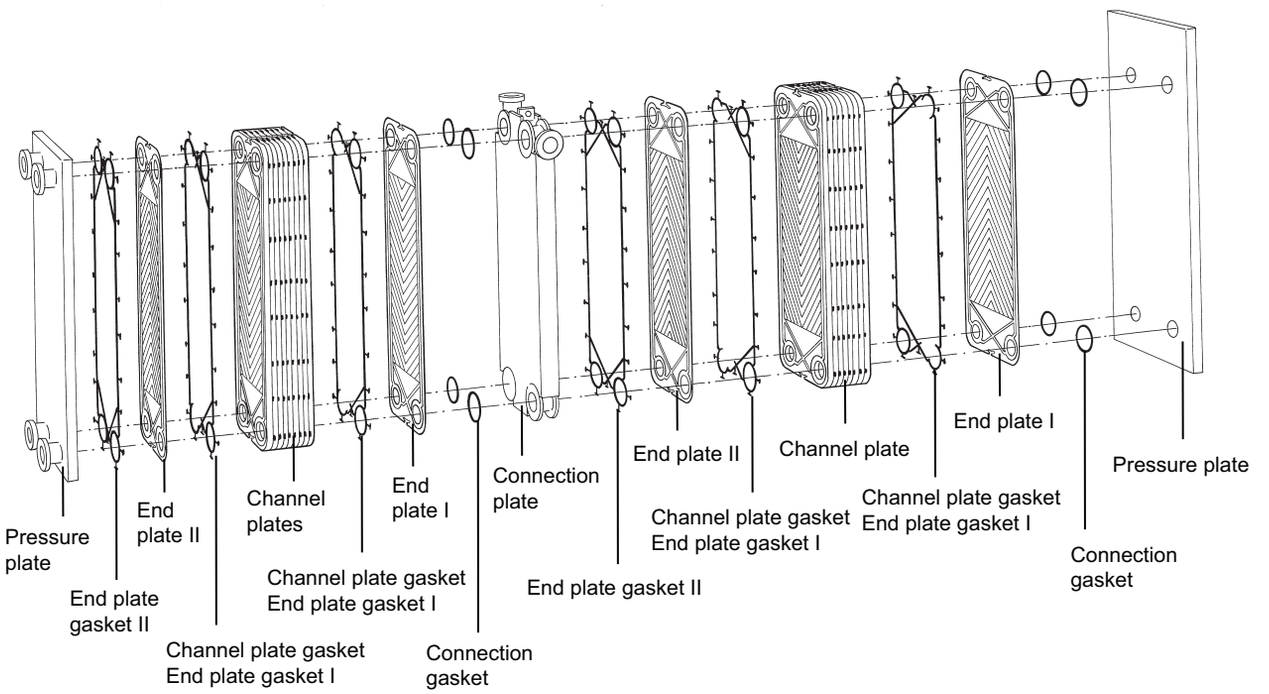

Qualities	Gasket type	Part numbers			Colour marking
		End plate gasket II (or 2 pieces of channel plate gasket)	Channel plate gasket end plate gasket I	Connection gasket	
EPDMFF	Clip-On	3900561126	3900561026	3450526302	1 grey + 1 pink
NBRFF	Clip-On	3900561127	3900561027	3450526301	1 blue + 1 pink
	Clip-On	3900561130	3900561130		1purple + 1 pink

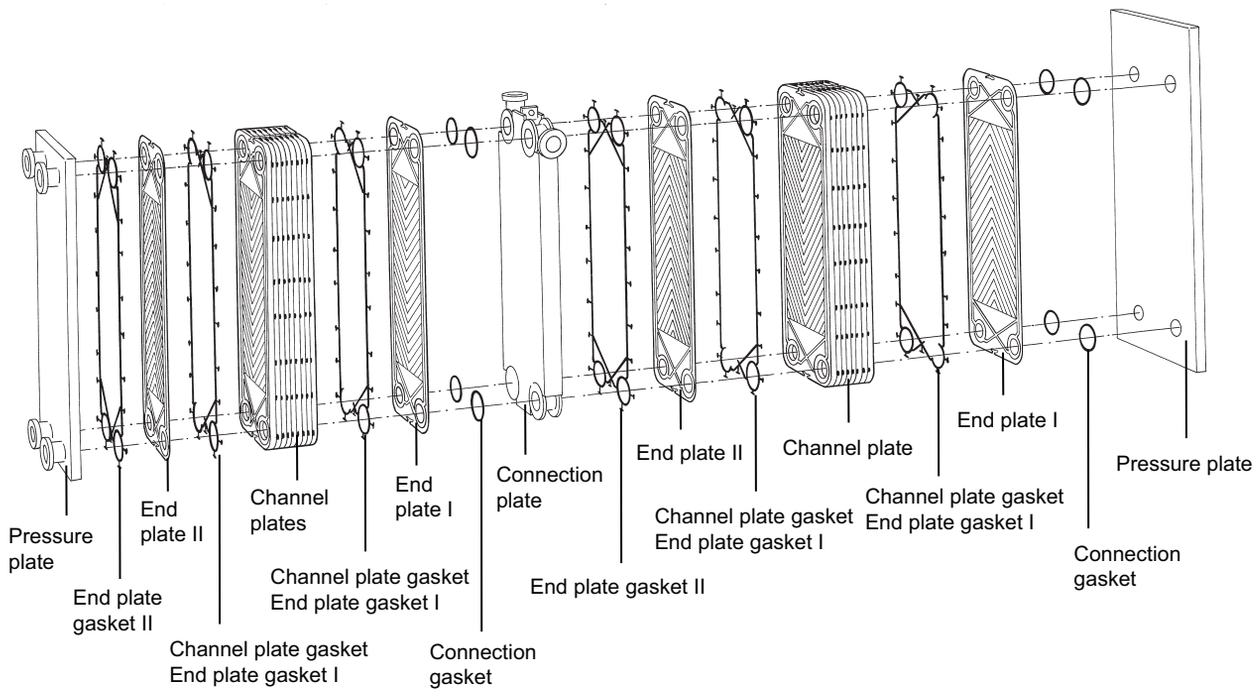

Qualities	Gasket type	Part numbers			Colour marking
		End plate gasket II (or 2 pieces of channel plate gasket)	Channel plate gasket end plate gasket I	Connection gasket	
EPDMFF	Clip-On	390084016326	390084016126	3450526302	1 grey + 1 pink
NBRFF	Clip-On	390084034027	390084016227	3450526301	1 blue + 1 pink

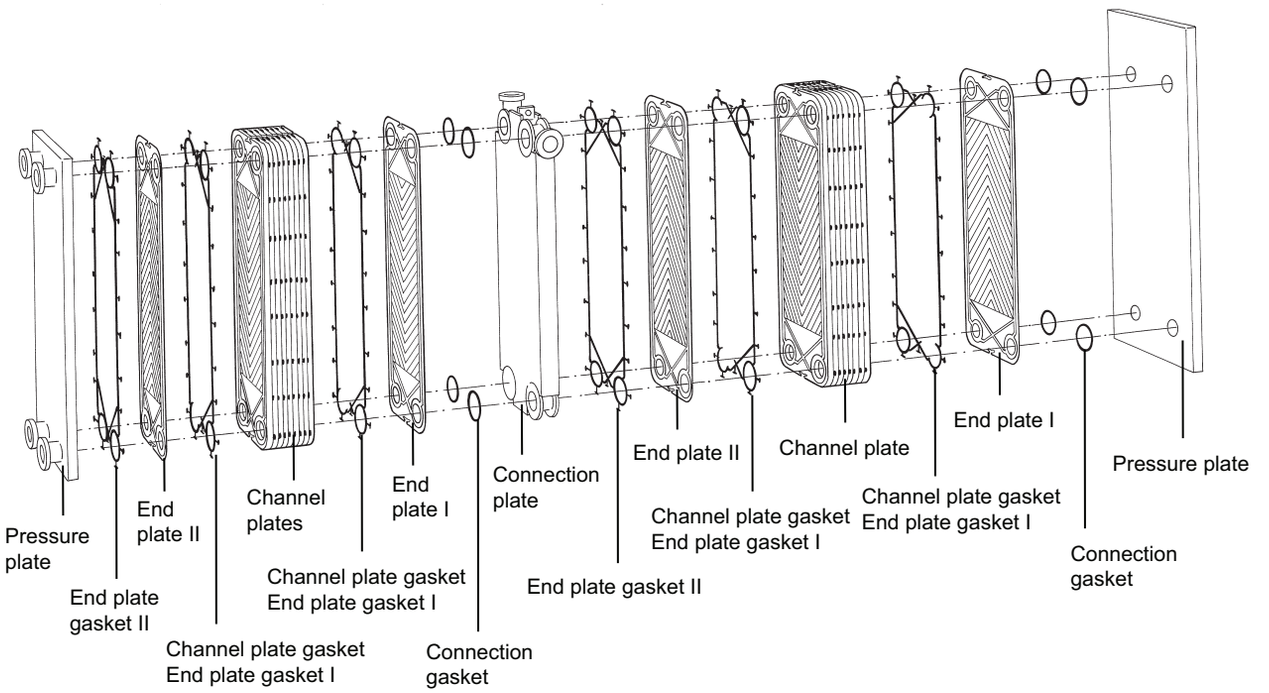

Qualities	Gasket type	Part numbers			Colour marking
		End plate gasket II (or 2 pieces of channel plate gasket)	Channel plate gasket End plate gasket I	Connection gasket	
EPDMFF	Clip-On	3900561326	3900561226	3450526402	1 grey + 1 pink
NBRFF	Clip-On	3900561327	3900561227	3450526401	1 blue + 1 pink

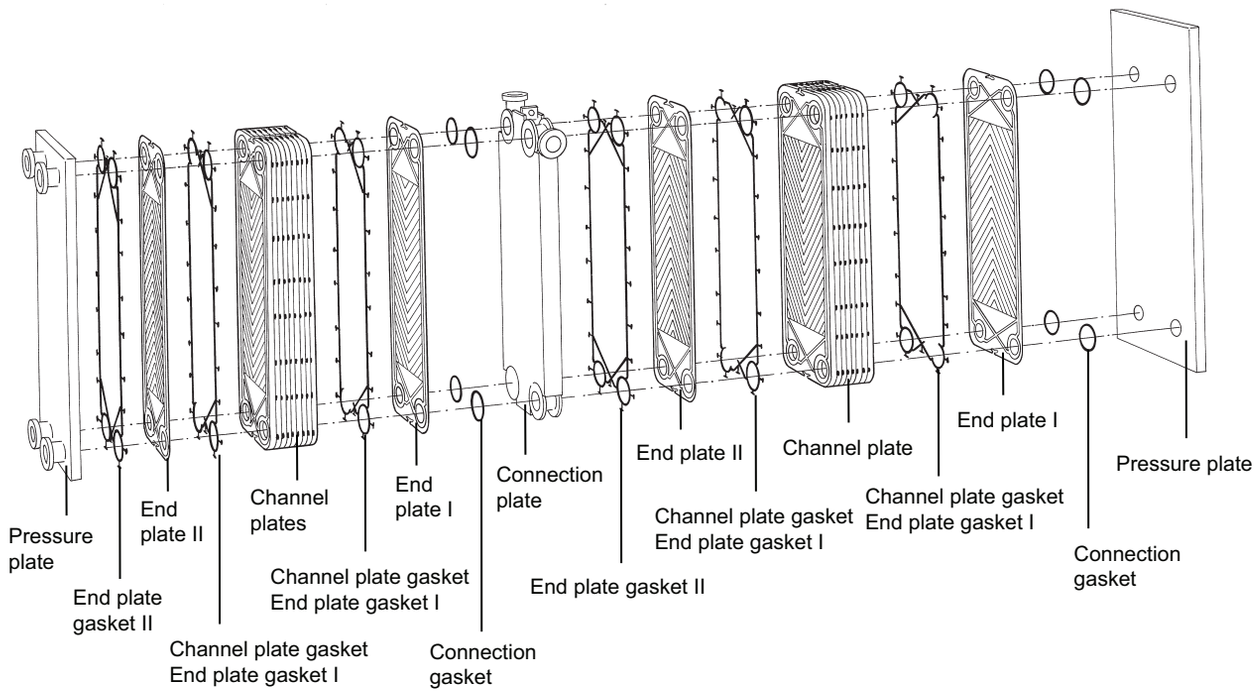

Qualities	Gasket type	Part numbers			Colour marking
		End plate gasket II (or 2 pieces of channel plate gasket)	Channel plate gasket end plate gasket I	Connection gasket	
EPDMFF	Clip-On	(2 pieces)3900547227	3900547227	3350002703 3450496801*	1 grey + 1 pink
NBRFF	Clip-On	(2 pieces)3900547226	3900547226	3350002702 3450496901*	1 blue + 1 pink

* Ring gasket with unsymmetric gasket profile used for heat excangers older than 2009.

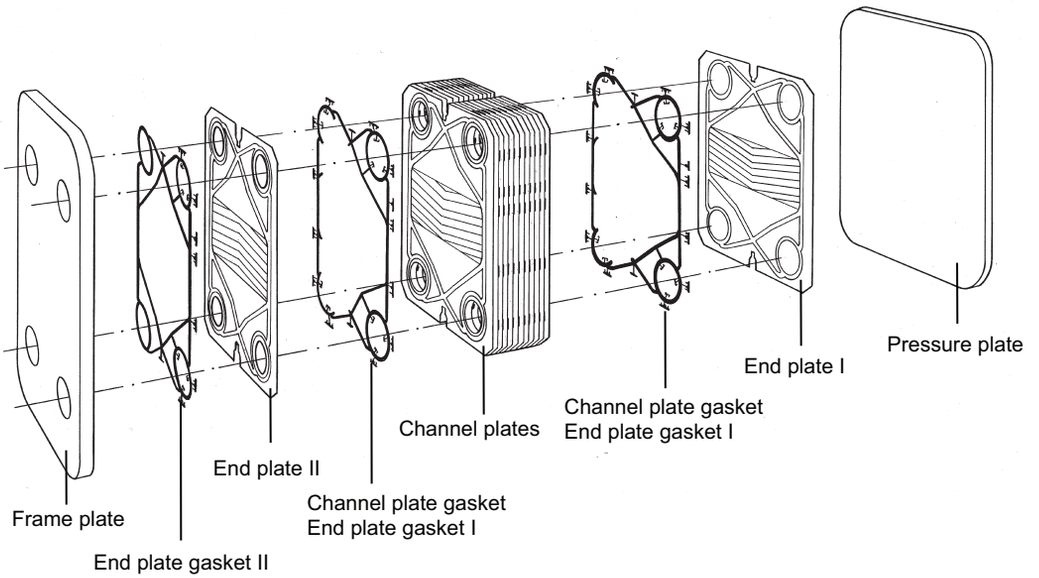

Qualities	Gasket type	Part numbers		Colour marking
		End plate gasket II (or 2 pieces of channel plate gasket)	Channel plate gasket end plate gasket I	
NBRP	Clip-On	(2 pieces) 3233029346	3233029346	1 blue
EPDMF	Clip-On	(2 pieces) 3233029328	3233029328	2 grey
EPDMFF	Clip-On	(2 pieces) 3900581426	3900581426	1 grey + 1 pink
FKMFF	Clip-On	(2 pieces) 3900581430	3900581430	1 purple + 1 pink

Transition plates				
Qualities			NBRP	EPDMFF	FKMFF
Colour marking			1 blue	1 grey + 1 pink	1 purple + 1 pink
* **Ring gaskets** (1 pcs. required for each port hole)		Ring gaskets	3900329106	3900329126	3900329130
Collars					
Stainless steel	3233068461	Collars			
Channel plate gaskets, 2 pcs.					
	Clip-on	Channel plate gasket	3233029346	3900581426	3900581430

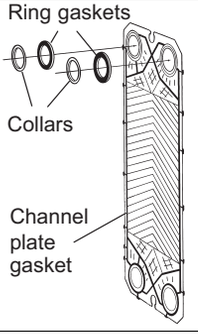

*** Note!** These parts only needed if in the plate pack list - is a transition plate specified, i.e. code DD=41-55
Note! Please use Alfa Laval GC5 FDA approved glue for transition plates. Item no. 3350021702.

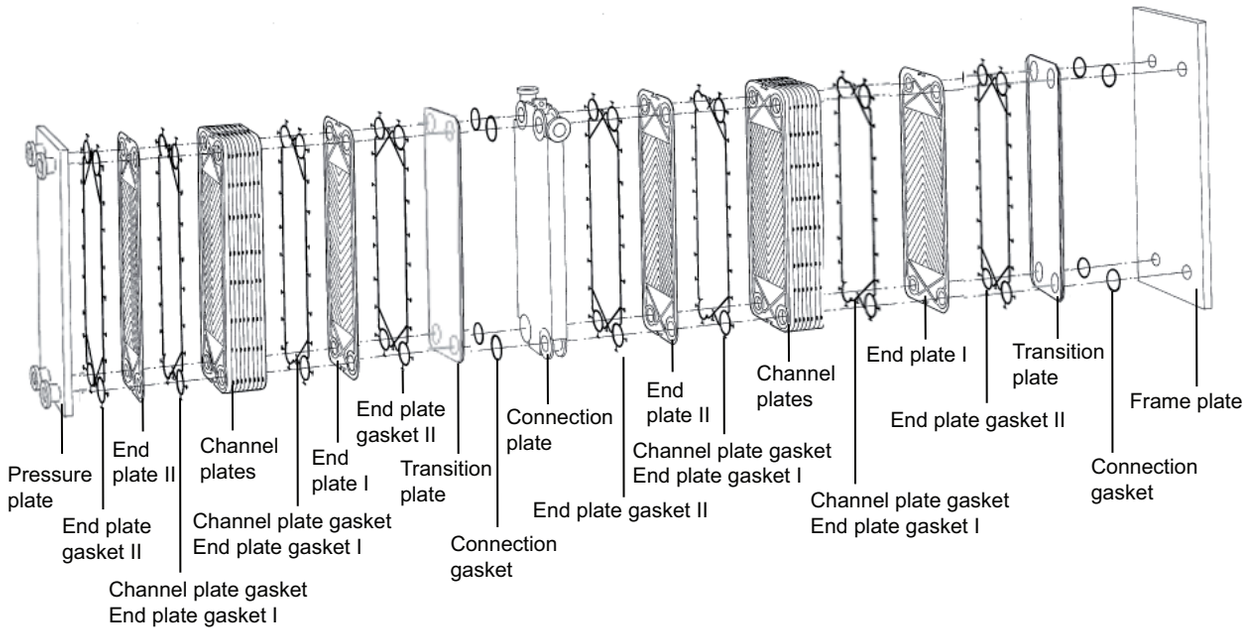

Qualities	Gasket type	Part numbers			Colour marking
		End plate gasket II (or 2 pieces of channel plate gasket)	Channel plate gasket end plate gasket I	Connection gasket	
NBRFF	Clip-On	390084004627	390084004327	3450526301	1 blue + 1 pink
EPDMFF	Clip-On	390084004626	390084004326	3450526302	1 grey + 1 pink

Table 42. Gaskets for M10B/BD

Qualities		NBRP	EPDM	EPDMAL	EPDMCT	EPDMF	HNBR**
Colour marking		1 blue	1 grey	3 grey	1 grey + 2 yellow	2 grey	1 blue + 1 green
Channel plate gasket							
End plate gasket I							
Glued Rib Clip-On Rib Clip-On Peak	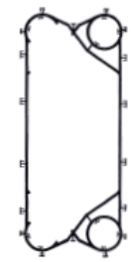	3233016596 3233016546	3233016593	3233016029 * 3233016029	3233016543	3233016578 3233016528	3233016584 3233016534
End plate gasket II (consists of 2 channel plate gaskets)							
Glued Rib alt. Clip-On Rib alt. Clip-On Peak	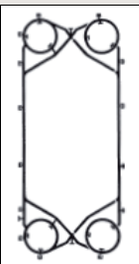	3233016596 3233016546	3233016593	 3233016029	3233016543	3233016528	3233016584 3233016534

Note!

* Before gluing the T- flaps must be cutted of.

** HNBR colour marking changed from 110101. Old colour marking 1 blue + 1 red.

Table 43. Gaskets for M10-B/BD

Qualities		CSM	NBRB	FKMG	FKMB	QP	NBRHTF
Colour marking		1 red	2 blue	3 purple	2 purple	No mark	3 blue
Channel plate gasket							
End plate gasket I							
Glued Rib Clip-On Rib Clip-On Peak	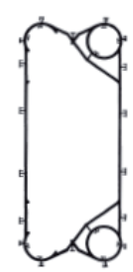	3233016549	3900175607	3233016598 3233016548	3233016524	3233016547	3233016531
End plate gasket II (consists of 2 channel plate gaskets)							
Glued Rib alt. Clip-On Rib alt. Clip-On Peak	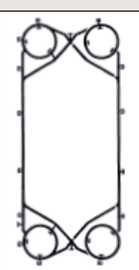	3233016549	3900175607	3233016598 3233016548	3233016524	3233016547	3233016531

Note!

* Before gluing the T- flaps must be cutted of.

** HNBR colour marking changed from 110101. Old colour marking 1 blue + 1 red.

Qualities			NBRP	EPDM	EPDMAL	NBRB
Colour marking			1 blue	1 grey	3 grey	2 blue
Transition plates						
*Ring gaskets		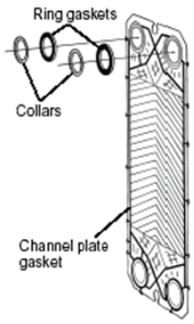	3233065146	3233065143	3233065129	
Collars						
Stainless steel	3232473671					
Titanium	3232473672					
Hast.C	3232473674					
SMO	3232473675					
Channel plate gaskets, 2 pieces						
	Glued Rib alt.		3233016596			
	Clip-On Rib		3233016546		3900175607	
FM-frame						
Rubber lining frame - and pressure plate			3233065543		3233065523	
Rubber lining pressure plate (old design with port hole Ø 78 mm)			3233064878		3233064873	

Note!

* These parts only needed if there in the plate pack list - is a transition plate specified, i.e. code DD=41-55
* HNBR colour marking changed from 110101. Old colour marking 1 blue + 1 red

Qualities			QP	HNBR**	CSM	FKMG
Colour marking			no mark	1 blue +1 green	1 red	3 purple
Transition plates						
*Ring gaskets		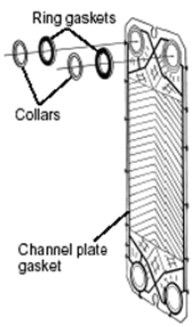	3233065147	3233065134	3233065149	3233065148
Collars						
Stainless steel	3232473671					
Titanium	3232473672					
Hast.C	3232473674					
SMO	3232473675					
Channel plate gaskets, 2 pieces						
	Glued Rib alt.					
	Clip-On Rib					
FM-frame						
Rubber lining frame - and pressure plate						
Rubber lining pressure plate (old design with port hole Ø 78 mm)						

Note!

* These parts only needed if there in the plate pack list - is a transition plate specified, i.e. code DD=41-55
* HNBR colour marking changed from 110101. Old colour marking 1 blue + 1 red

Qualities	NBRB	EPDM	EPDMAL	HNBR**	CSM	FPMG
Colour marking	2 blue	1 grey	3 grey	1 blue + 1 green	1 red	3 purple
FG-frame						
Rubber lining frame - and pressure plate (T = 40 mm*)	3233065573	3233065593				
Rubber lining frame - and pressure plate (T = 45 mm*)	3233065623	3233065643				
Rubber lining frame - and pressure plate (T = 35 mm*) (old design)	no longer available	no longer available				
FL-frame						
Rubber lining frame - and pressure plate	3233065473	3233065493				
Rubber lining pressure plate (old design with port hole Ø 78 mm)	3233064823	3233064828				

*) T= thickness of the frame - and pressure plate

Table 44. Gasket for M10-M

Qualities		NBRP	NBRB	EPDM	EPDMF	EPDMAL	HNBR*
Colour marking		1 blue	2 blue	1 grey	2 grey	3 grey	1 blue + 1 green
Channel plate gasket, end plate gasket I							
Glued Peak Clip-On Peak Clip-On Rib	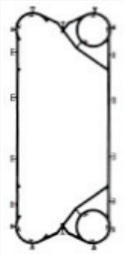	3233015046 3233015096	3900176907	3233015043	3233015078	3233015079	3233015084
Qualities			NBRFF			EPDMFF	
Colour marking			1 blue + 1 pink			1 grey + 1 pink	
Clip-On Peak			3900561627			3900561626	

* HNBR colour marking changed from 110101. Old colour marking 1 blue + 1 red.

Table 45. Gasket for M10-M

Qualities		CSM	FKMG	EPDMC	FKMT	NBRHTF
Colour marking		1 red	3 purple	1 grey+1 yellow	4 purple	3 blue
Channel plate gasket End plate gasket I						
Glued Peak Clip-On Peak Clip-On Rib	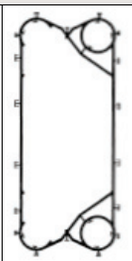	3233015099	3233015048 3233015098	3233015093	3233015287	3233015081
Qualities				EPDMP		FKMFF
Colour marking				1 grey +1 green		1 purple +1 pink
Clip-On Peak				3900176928		3900825730

* HNBR colour marking changed from 110101. Old colour marking 1 blue + 1 red.

Qualities		NBRP	NBRB	EPDM	EPDMF	EPDMAL	HNBR*
Colour marking		1 blue	2 blue	1 grey	2 grey	3 grey	1 blue + 1 green
End plate gasket II (consists of 2 channel plate gaskets)							
Glued Peak alt. Clip-On Peak alt. Clip-On Rib	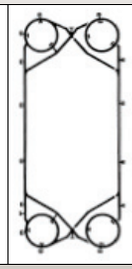	3233015046 3233015096	3900176907	3233015043	3233015078	3233015079	3233015084
Qualities			NBRFF			EPDMFF	
Colour marking			1 blue + 1 pink			1 grey + 1 pink	
Clip-On Peak			3900561627			3900561626	

* HNBR colour marking changed from 110101. Old colour marking 1 blue + 1 red.

Qualities		CSM	FKMG	EPDMC	FKMT	NBRHTF
Colour marking		1 red	3 purple	1 grey + 1 yellow	4 purple	3 blue
End plate gasket II (consists of 2 channel plate gaskets)						
Glued Peak alt. Clip-On Peak alt. Clip-On Rib	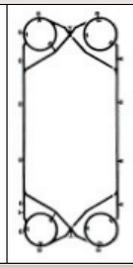	3233015099	3233015048 3233015098	3233015093	3233015287	3233015081
Qualities				EPDMP		FKMFF
Colour marking				1 grey +1 green		1 purple +1 pink
Clip-On Peak				3900176928		3900825730

* HNBR colour marking changed from 110101. Old colour marking 1 blue + 1 red.

Qualities			NBRP	EPDMAL	EPDM (IND)	EPDMFF	NBRFF
Colour marking			1 blue	3 grey	1 grey	1 grey + 1 pink	1 blue + 1pink
Transition plates							
***Ring gaskets**		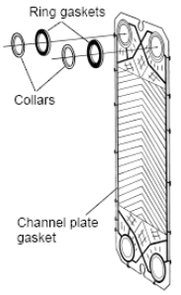	3233064996	3233064979	3233064993	390056172	3900561727
Collars							
Stainless steel	3900771801						
Titanium	3900771802						
Nickel 200/201	3900771802						
C276	3900771804						
SMO 254	3900771805						
G30	3900771806						
Nickel 400	3900771807						
TiPd	3900771808						
1.4439	3900771809						
B3	3900771810		3233015046				
D205	3900771811		3233015096				
316L	3900771812						
C2000	3900771813						
Channel plate gaskets, 2 pieces							
Glued Peak alt. Clip-On Peak							
FM-frame							
Rubber lining frame - and pressure plate			3233065523		3233065543		
Rubber lining pressure plate (old design with port hole Ø 78 mm)			3233064873		3233064878		

Note!

* These parts only needed if there in the plate pack list - is a transition plate specified, i.e. code DD=41-55

** HNBR colour marking changed from 110101. Old colour marking 1 blue + 1 red.

Qualities			HNBR** (Hy-Nitrile)	CSM (Hypalon)	FKMG (Viton G)	EPDMP
Colour marking			1 blue + 1 green	1 red	3 purple	1 grey + 1 green
Transition plates						
***Ring gaskets**		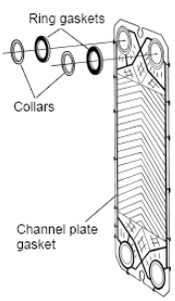	3233064984	3233064999	3233064998	3900561728
Collars						
Stainless steel	3900771801					
Titanium	3900771802					
Nickel 200/201	3900771802					
C276	3900771804					
SMO 254	3900771805					
G30	3900771806					
Nickel 400	3900771807					
TiPd	3900771808					
1.4439	3900771809					
B3	3900771810					
D205	3900771811					
316L	3900771812					
C2000	3900771813					
Channel plate gaskets, 2 pieces						
Glued Peak alt. Clip-On Peak						
FM-frame						
Rubber lining frame - and pressure plate						
Rubber lining pressure plate (old design with port hole Ø 78 mm)						

Note!

* These parts only needed if there in the plate pack list - is a transition plate specified, i.e. code DD=41-55

** HNBR colour marking changed from 110101. Old colour marking 1 blue + 1 red.

Qualities	NBRB	EPDM (IND)	EPDMF (FDA)	HNBR** (Hy-Nitrile)	CSM (Hypalon)	FKMG (Viton G)
Colour marking	2 blue	1 Grey	2 Grey	1 Blue + 1 Green	1 Red	3 Purple
FG-frame						
Rubber lining frame - and pressure plate (T = 40 mm*)	3233065573	3233065593				
FG-frame						
Rubber lining frame - and pressure plate (T = 45 mm*)	3233065623	3233065643				
Rubber lining frame - and pressure plate (T = 35 mm*) (old design)	no longer available	no longer available				
FL-frame						
Rubber lining frame - and pressure plate	3233065473	3233065493				
Rubber lining pressure plate (old design with port hole Ø 78 mm)	3233064823	3233064828				

*) T= thickness of the frame - and pressure plate

** HNBR colour marking changed from 110101. Old colour marking 1 blue + 1 red.

Table 46. Gaskets for H7

Qualities		NBRP	EPDMF	NBRHTF
Colour marking		1 Blue	2 Grey	3 Blue
Channel plate gasket				
End plate gasket I		3226416146	3226416128	3226416127
End plate gasket II				
1 set consists of :		3226416646	3226416628	3226416627
2 Gasket heads		3226416846	3226416828	3226416827
1 Channel plate gasket		3226416146	3226416128	3226416127

Qualities		NBRP	EPDMF	NBRHTF
Colour marking		1 Blue	2 Grey	3 Blue
Ring gaskets for corner				
H7- RC & H7-RM		3226416046	3226416028	3226416027
for RC- and RM frame plate		3226416096	3226416078	3226416077
Transition plates (only for H7-FMC)				
Ring gaskets (1 piece required for each port hole)		3233064196	3233064178	3233064177
Collars (1 piece required for each port hole)				
Stainless steel	3232475061			
Plate gaskets				
1 Channel plate gasket		3226416146		3226416127
2 Gasket heads (or less)		3226416846		3226416827

1.3 Shell and Tube Heat Exchangers

Our PharmaLine and ViscoLine tubular heat exchangers are especially designed to meet the whole requirement range in hygienic heat exchange from standard CIP duties, viscous food processing to the highest hygienic demands in pharma applications.



Spare parts

Alfa Laval Pharma-line S 1.3.294

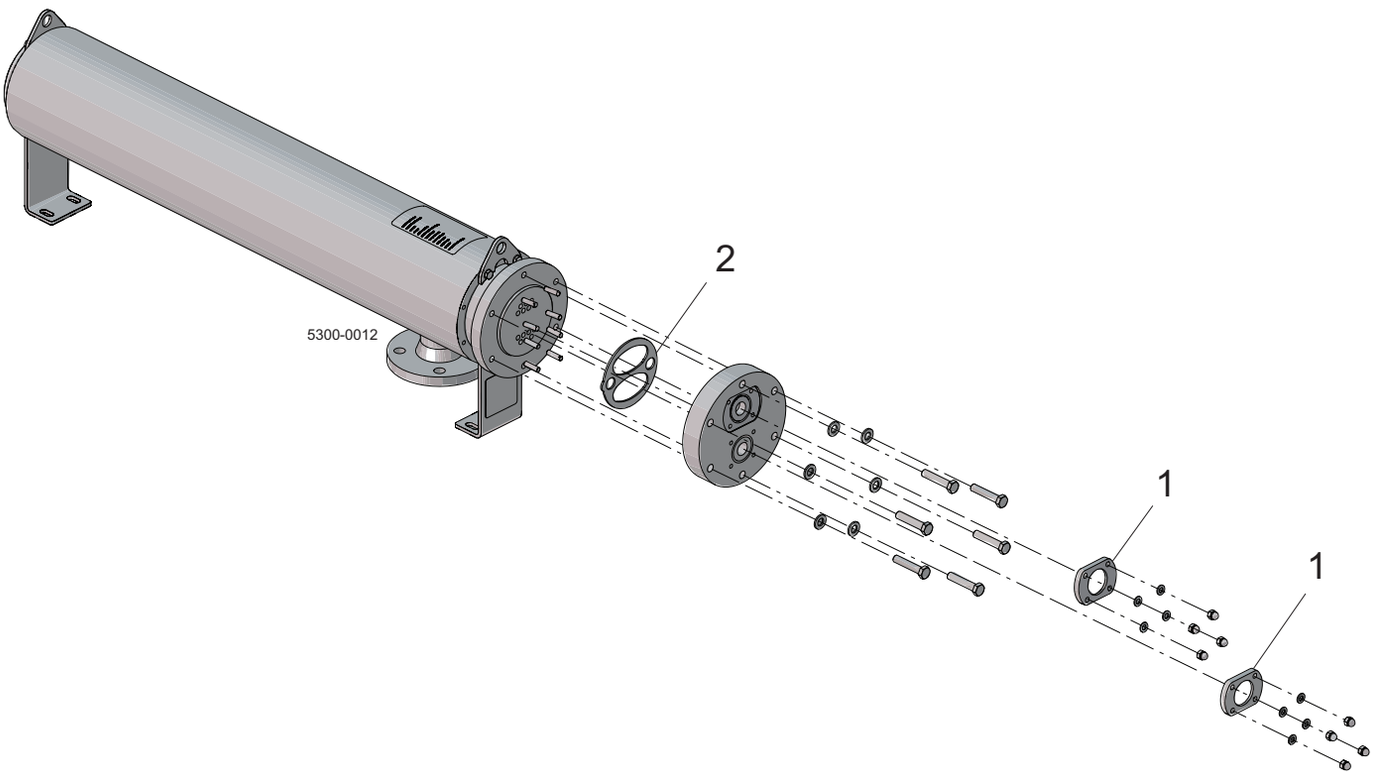
5300-0012
2
1
1

Pos	Qty	Denomination	Pharma-line S 1-0.1	Pharma-line S 1-0.3	Pharma-line S 1-0.4	Pharma-line S 2-0.3	Pharma-line S 2-0.6
1	1	Plate flange, 1"/1½" (25/38)	9615012695	9615012695	9615012695	9615012695	9615012695

Pos	Qty	Denomination	Pharma-line S 2-1.0	Pharma-line S 3-0.4	Pharma-line S 3-1.0	Pharma-line S 3-1.6	Pharma-line S 1-0.6
1	1	Plate flange, 1"/1½" (25/38)	9615012695	9615012695	9615012695	9615012695	9615012695

Pos	Qty	Denomination	Pharma-line S 2-1.3	Pharma-line S 3-2.0
1	1	Plate flange 1"/1½" (25/38)	9615012695	9615012695

Pos	Qty	Denomination	Pharma-line S 1-0.7	Pharma-line S 1-1.1	Pharma-line S 1-1.2	Pharma-line S 2-1.4	Pharma-line S 2-2.4
1	1	Plate flange, 2" (51)	9615012696	9615012696	9615012696	9615012696	9615012696

Pos	Qty	Denomination	Pharma-line S 2-2.6	Pharma-line S 3-2.2	Pharma-line S 3-3.7	Pharma-line S 3-4.0
1	1	Plate flange, 2" (51)	9615012696	9615012696	9615012696	9615012696

Pos	Qty	Denomination	Pharma-line S 1-1.01	Pharma-line S 1-0.3	Pharma-line S 1-0.4	Pharma-line S 2-0.3	Pharma-line S 2-0.6
2	1	Gasket PTFE	9615012697	9615012697	9615012697	9615012697	9615012697

Pos	Qty	Denomination	Pharma-line S 2-1.0	Pharma-line S 3-0.4	Pharma-line S 3-1.0	Pharma-line S 3-1.6
2	1	Gasket, PTFE	9615012697	9615012697	9615012697	9615012697

Pos	Qty	Denomination	Pharma-line S 1-0.6	Pharma-line S 2-1.3	Pharma-line S 3-2.0
2	1	Gasket, PTFE	9615012698	9615012698	9615012698

Pos	Qty	Denomination	Pharma-line S 1-0.7	Pharma-line S 1-1.1	Pharma-line S 1-1.2	Pharma-line S 2-1.4	Pharma-line S 2-2.4
2	1	Gasket, PTFE	9615012699	9615012699	9615012699	9615012699	9615012699

Pos	Qty	Denomination	Pharma-line S 2-2.6	Pharma-line S 3-2.2	Pharma-line S 3-3.7	Pharma-line S 3-4.0
2	1	Gasket, PTFE	9615012699	9615012699	9615012699	9615012699

This is Alfa Laval

Alfa Laval is active in the areas of Energy, Marine, and Food & Water, offering its expertise, products, and service to a wide range of industries in some 100 countries. The company is committed to optimizing processes, creating responsible growth, and driving progress – always going the extra mile to support customers in achieving their business goals and sustainability targets.

Alfa Laval's innovative technologies are dedicated to purifying, refining, and reusing materials, promoting more responsible use of natural resources. They contribute to improved energy efficiency and heat recovery, better water treatment, and reduced emissions. Thereby, Alfa Laval is not only accelerating success for its customers, but also for people and the planet. Making the world better, every day. It's all about Advancing better™.

How to contact Alfa Laval

Contact details for all countries are continually updated on our web site. Please visit www.alfalaval.com to access the information.

Alfa Laval reserves the right to change specifications without prior notification.
Alfa Laval is a trademark registered and owned by Alfa Laval Corporate AB, Sweden. Alfa Laval © 2022

100001669-2-EN 2208

