Close at hand

Tank equipment for Hygienic Fluid Handling Equipment, September 2022



1. Tank Equipment

Alfa Laval provides a full line of tank and cleaning equipment for all sanitary processing industries.



General information 1.1
Agitators 1.2
Mixers 1.3
Wall mounted cleaning nozzles 1.4
Rotary jet heads 1.5
Rotary spray heads 1.6
Static spray balls 1.7
Tank accessories 1.8
Tank covers 1.9

1.1 General information

Genuine spare parts and service kits
Genuine spare parts and service kits 1.1.7

Service tools
Alfa Laval service tools 1.1.8

Technical data - stainless steel and rubber materials
Technical Information 1.1.9

360° service portfolio
360° service portfolio 1.1.11

Service maintenance training
Service and maintenance training 1.1.12

Preventive maintenance guidelines
Agitators 1.1.13
Magnetic mixers 1.1.16
Tank cleaning equipment 1.1.18

360° service and maintenance videos
360° service & maintenance videos for tank equipment 1.1.21

Total piece of mind

Genuine spare parts and service kits

Alfa Laval spare parts are engineered and machined for optimal fit with guarantee for superior performance and uptime.

Using Alfa Laval genuine spare parts ensures the lowest possible total cost of ownership over the entire life cycle of your Alfa Laval equipment.

Furthermore the Alfa Laval spare parts meet all certification requirements and include documentation package with full traceability (1935/2004/EC) compliance with hygienic standards USP, FDA, EU-regulations, 3-A, EHEDG, ASME BPE, etc.

Alfa Laval spare parts are available 24/7 through extensive network of channel partners and distribution centres, and you can always contact us for technical service support and training, if needed.

Benefits when buying genuine spare parts:

- Certified materials
- Guaranteed performance - tested in laboratories.
- Maximum uptime – proven reliability.
- Longer maintenance intervals.
- Continuously improvement to meet the highest requirements and hygienic standards.
- 3 years extended warranty on the pumps & valves.

Service kits

Alfa Laval recommends that you buy complete service kits instead of indiviual parts, as each service kit contain all the spare parts you need for generel maintenance.

Futhermore, the complete service kits gives you several other advantages such as:

- Save time - simply order one service kit, rather that a lot of invidual items.
- Each service kit has a single part number - less stock numbers to deal with.
- The price of the service kits is less that the total price of the individual items.
- You do not have to carry a large spare parts inventory.
- Service kit for UltraPure products include full Alfa Laval Q-doc package.
- Each service kit contain a small instruction with a QR code, with access to our service & maintenance guidelines and videos.



The right o-ring quality

O-ring compression and swell are very important to be within the design limits of the pump and seal tolerances.
If these are not correct, the seal will leak.

The grade of manufacture of the o-rings determines its characteristics:

- Hardness
- Tensile strength
- Compression set
- Swelling

Specially designed service tools for Alfa Laval equipment

Alfa Laval service tools

Part of our Alfa Laval 360° Service Portfolio, Alfa Laval service tools are especially developed to protect Alfa Laval hygienic equipment from faulty service and minimize downtime during maintenance.

Use

Alfa Laval has the specific tools required to service Alfa Laval hygienic equipment. These include tools for installing, operating, maintaining our hygienic equipment.

Benefits

Using the correct Alfa Laval service tools will:

- Decrease service time
- Protect staff from unnecessary safety risks
- Secure service quality
- Maintain equipment performance

Alfa Laval tools are specially designed for Alfa Laval equipment and enables exchange of wear parts in safe order for both the service operator and the equipment.



Stainless Steel and Rubber Materials

Technical Information

Stainless steel

Our stainless steel material have the following demands to the contents of the most essential alloys:

Descriptions	Standard	Chrome Cr%	Nickel Ni%	Molybdenum Mo%	Carbon C%
AISI 304	ASTM A270	18.0-20.0	8.0-10.5	0.0	≤ 0.08
AISI 304L	ASTM A270	18.0-20.0	8.0-12.0	0.0	≤ 0.03
AISI 316L	ASTM A270	16.0-18.0	10.0-14.0	2.0-3.0	≤ 0.03
1.4301 (304)	EN 10088-1 (X 5CrNi18-10)	17.0-19.5	8.0-10.5	0.0	≤ 0.07
1.4307 (304L)	EN 10088-1 (X 2CrNi18-9)	17.5-19.5	8.0-10.0	0.0	≤ 0.03
1.4401 (316)	EN 10088-1 (X 5CrNiMo17-12-2)	16.5-18.5	10.0-13.0	2.0-2.5	≤ 0.07
1.4404 (316L)	EN 10088-1 (X 2CrNiMo17-12-2)	16.5-18.5	10.0-13.0	2.0-2.5	≤ 0.03
1.4435 (316L)	EN 10088-1 (X 2CrNiMo18-14-3)	17.0-19.0	12.5-15.0	2.5-3.0	≤ 0.03
1.4571 (316TI)	EN 10088-1 (X6CrNiMoTi17-12-2)	16.5-18.5	10.5-13.5	2.0-2.5	≤ 0.08

Rubber materials

In order to obtain the longest possible lifetime for rubber seals it is essential to choose the right quality for the actual duty. Consequently when choosing rubber quality, the characteristics of the different rubber types should be considered. All product wetted rubber material are in conformity of FDA.

EPDM rubber (Ethylene Propylene)

EPDM rubber is widely used within the food industry as it is resistant to most products used in this sector. Another advantage is that it may be used to a recommend max. temperatures of 140°C (244°F). However, there is one essential limitation, EPDM is not resistant to organic and non-organic oils and fats.

Actylonitrile Butadiene Rubber, NBR

NBR is the rubber type most frequently used for technical purposes. It is quite resistant to most hydrocarbons, e.g oil, grease and fat. It is sufficiently resistant to diluted lye and nitric acid and may be used to a recommend max. 95°C (203°F). As NBR is attacked by ozone it may not be exposed to ultravesiolet rays and should thus be stored so that this is avoided.

Silicone rubber, Q

The most significant quality of silicone rubber is that it can be applied from temperatures below -50°C (-58°F) to approx. + 180°C (356°F) and still keep its elasticity. The chemical resistance is satisfactory to most products. However, undiluted lye and acids as well as hot water and steam may destroy silicone rubber. The resistance to ozone is good.

Fluorine rubber, FPM

FPM is often used when other rubber types are unsuited, especially at high temperatures up to approx. 180°C (356°F). The chemical resistance is good to most products, however hot water, steam, lye, acid and alcohol should be avoided. The resistance to ozone is good.

Hydrogenated actylonitrileButadiene Rubber, HNBR

Mechanically strong and normally resistant to ozone and strong oxidizers, animal and vegetable fats, nonpolar solvents, oils and lubricants, water and aqueous solutions. The recommend max. temperature is 130°C (266°F).

Perfluoroalkoxy polymer, PFA

PFA is very similar to PTFE, but opposite to those PFA is thermo plastic and has minimal porosity. PFA has a very high mechanical strength which makes it a perfect choice when dealing with abbrasive products. The PFA seal offers longer service intervals. The recommend max. temperature for the PFA seal is 90°C (194°F).

Product and chemical resistance of flexible rubber materials

The information below is intended as an aid in selecting the best rubber quality for an actual application. It is not possible to state any general lifetime of rubber seals as many factors influence it: chemical attack, temperature, mechanical wear etc. Extreme temperatures, even within the generally accepted limits, may worsen other kinds of attack and thus reduce the lifetime.

Ratings

1 = Unsuitable.
2 = Limited suitability.
3 = Normal suitability.
4 = High suitability.
- = Not recommended for other reasons.

The table contains data which have been complied from the results of our own tests and the recommendations of our raw material suppliers. The data should be considered as recommendations only and will be brought up-to-date from time to time. They are based on constant contact with the specified product.
In case of doubt or lack of information it would be advisable to consult us directly, which will enable us to investigate specific applications.

Product or process		NBR[1)]	HNBR[2)]	EPDM[3)]	Q[4)]	FPM[5)]	PTFE[6)]
Dairy products (milk, cream)		3	3-4	3-4	3-4	-	3-4
Dairy products (sour milk products)		3	3-4	3-4	3-4	-	3-4
Brewery products (beer, hops etc.)		3	3-4	3-4	1-2	2-3	3-4
Wine and yeast		3	3-4	4	4	2-3	3-4
Animal and vegetable fats	100°C	3	4	1-2	3	4	3-4
Water and water solutions	< 70°C	3	4	4	3	2-4	3-4
Hot water and steam	< 130°C	1	4	4	2	-	3-4
Concentrated fruit juices and etheral oils	< 100°C	1	-	1	1	3	3-4
Non-oxydising acids	< 80°C	1-2	2	3	1-2	2	3-4
Oxydising acids	< 80°C	-	2	3	1	2	3-4
Weak concentrate of lye	< 100°C	2	3-4	4	2	2	3-4
Strong concentrate of lye	< 100°C	1	2-3	3	1	1	3-4
Mineral oils	< 110°C	3	4	-	-	4	3-4
Aliphatic carburetted hydrogen (hexane)		3	3	1	1	4	3-4
Aromatic carburetted hydrogen (benzole)		1	2	1	1	3	3-4
Alcohols		1-3	2-3	2-3	3-4	3-4	3-4
Ester and ketones		1-2	1-2	1-2	1-2	3-4	3-4
Ether		1	2	1	1-3	3-4	3-4
Methylene chloride		1	2	1	2-3	3-4	3-4
Ozone and atmospheric conditions		1-2	3	4	4	3-4	3-4

International designation of flexible rubber materials according to ISO R 1629.
ISO = International standard.

Notes

	Designation of flexible rubber materials	Abbreviation symbol
1)	Nitrile rubber	N
2)	Hydrogenated actylonitrile rubber	H
3)	Ethylene propylene rubber	E
4)	Silicone rubber	Q
5)	Fluorinated rubber	F
6)	Polytetraflour ethylene	

Services that extend performance

360° service portfolio

Alfa Laval's expert service is always on hand through our global network. Alfa Laval also offers a wide range of time-saving tools and resources to secure performance, making it easy to configure, size, and optimize Alfa Laval hygienic equipment.

Alfa Laval Service offers a broad range of spare parts, equipment, and services covering the entire equipment life cycle from start-up, support and maintenance to improvements and monitoring. We are committed to ensuring maximum uptime, continuous optimization of your customers' processes, Alfa Laval service kits and top quality spare parts, designed for durability and performance, are always available. We secure that Alfa Laval equipment remains in compliance with certificates and legal requirements in your market.

Alfa Laval Service maximizes the reliability and uptime of Alfa Laval equipment. The result is superior performance throughout the equipment life cycle to give you and your customers a competitive edge. Together with our global service network we can help secure long-term performance.

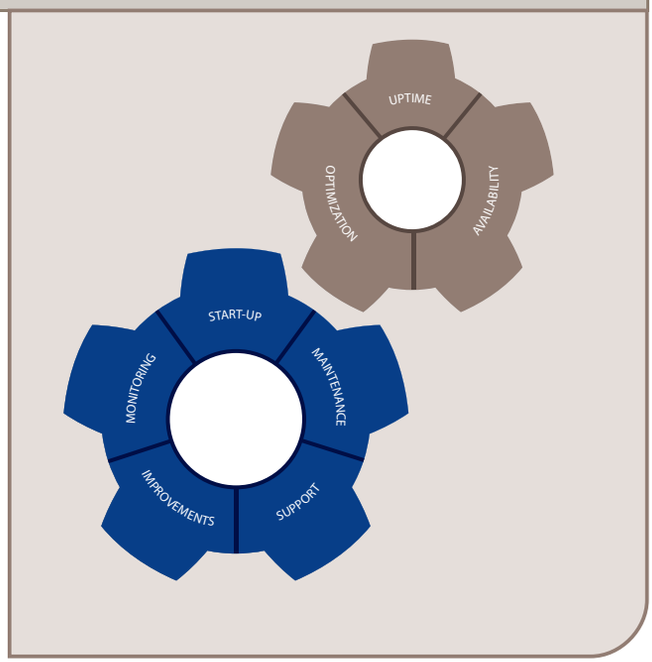

Maximize the reliability and uptime of your Alfa Laval equipment

Service and maintenance training



Objective
The objective of this training is to get “hands-on” training in maintenance and troubleshooting for key components from the Alfa Laval Hygienic Equipment portfolio, enabling you to do this out in the field.

Content
The training will focus on how to service, maintain, disassemble and rebuild the following Alfa Laval key components in accordance with the Alfa Laval service guidelines:

Valves
- Alfa Laval Butterfly Valves
- Alfa Laval Single Seat Valves
- Alfa Laval Unique Mixproof Valves
- Alfa Laval SMP-BC Mixproof Valves
- Alfa Laval CPM Valve

Automation

- Alfa Laval ThinkTop
- Alfa Laval ThinkTop Basic
- Alfa Laval IndiTop

Pumps

- Alfa Laval LKH Pump
- Alfa Laval SolidC Pumps
- Alfa Laval SRU Pumps
- Alfa Laval SX Pumps

Tank Equipment

- Alfa Laval Rotary Jet Heads
- Alfa Laval EnsaFoil Agitators

There will be a focus on Alfa Laval Service Kits, preventive maintenance, and a structured way of doing trouble shooting

Qualifications
- Basic knowledge of the Alfa Laval Hygienic Equipment portfolio
- Basic English skills

Participants
Maintenance and service engineers, technical support.

Dates
Training will be held twice a year.

Questions regarding the training?
You are welcome to contact your local Alfa Laval representative.

Service maintenance guidelines

Agitators

Plan your budget and your downtime

A production stop caused by poor operation or breakdown is costly, both in lost production and expensive servicing.

The most cost-effective way to ensure product safety and production reliability is to plan and carry out service at scheduled intervals.

Using the Alfa Laval guidelines it is easy to plan the relevant maintenance intervals. You can plan your operating budget and the risk of breakdowns is virtually eliminated. Preventive maintenance makes sense financially.

Instruction manuals and service videos

Detailed manuals are supplied with every product. Service and maintenance videos have been created to enable you to service Alfa Laval products in a correct and efficient way. Scan the QR code to access the service videos.

Genuine spare parts and service kits

Alfa Laval Service Kits and Upgrade Kits are available for scheduled maintenance. They contain all the relevant parts needed for general service. Using genuine Alfa Laval spare parts guarantees the right quality and composition of materials. Needless to say they come with full traceability. Scan the QR code to access the spare parts catalogue.



footnote

Alfa Laval service tools

Alfa Laval has the specific tools required to service Alfa Laval hygienic equipment. These include tools for installing, operating and maintaining our hygienic equipment.

Using genuine spare parts ensures your certicates are still valid.

Example of exploded view - ALS with D-seal

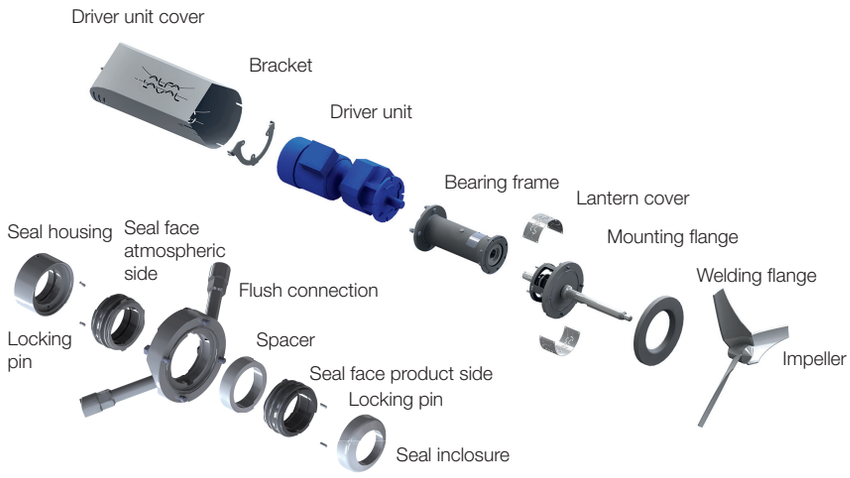

Inspect the agitator regularly

The Alfa Laval agitator is available in various configurations fit specific applications. To inspect the agitator you need to know the type of agitator and which seals are used. This information can be found on the name plate on your agitator. Further information can be obtained online using the serial number.

Agitator type definition

Top mounted agitators	Type: AL**T**
Top mounted agitators with **B**ottom support	Type: AL**TB**
Bottom mounted agitators	Type: AL**B**
Side mounted agitators	Type: AL**S**

Type of agitator and example of agitator name plate.
For more information please contact Alfa Laval.

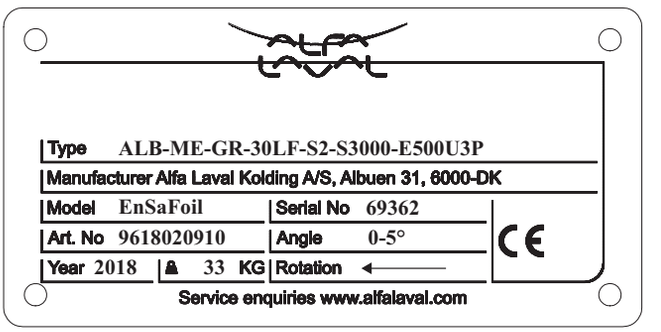

Preventive maintenance aims to prevent equipment failures with e.g. regular lubrication and adjustments. Based on experience and knowledge of running conditions, it is also possible to replace wear parts before they fail. Keeping a maintenance log is a good way to build experience.

	Inspect/clean/lubricate			
	Supplier instruction	Weekly	Monthly	Half-yearly
Drive unit/all types of agitator				
Motor	x			
- Clean surfaces - to prevent overheating		x		
Gear	x			
- Clean vent screw (if any)		x		
- Check for oil leakage		x		
Flange/all types of agitator				
Clean drain			x	
Shaft sealing for ALS/ALB				
-Not flushed mechanical seal: S1, S2, S3, S3SD			x	
-Flushed mechanical seal: DC,D			x	
Shaft sealing for ALT/ALTB				
- Radial seal: R		x		
- V-ring seal: V			x	
-Not flushed mechanical seal: S, S3			x	
-Flushed mechanical seal: DC, D			x	
Bearing frame if any/all types of agitator				
Clean PreVent screw		x		
Check spider clearance				x
Check gaskets				x
Lubricate radial seals				x
Impeller device/all types of agitator				
Sticky media				
- Clean impeller device			x	
Abrasive media				
- Check blade thickness*			x	
Check fastening of pointed set screws			x	
Guidance/support for ALT/ALTB				
Shaft rotation - radial movement < 5mm				
Bushing: BS1, BS3				x
Bushing: BS1 with abrasive media			x	
Bushing: BS2, MS2			x	

* If you suspect a reduction in blade thickness, contact Alfa Laval and quoting the serial no. stated on the name plate

Scheduled maintenance intervals

To ensure that your agitator operates efficiently, it is essential to follow a simple preventive maintenance programme, which will keep your machine in good working order. Good maintenance requires careful attention at regular intervals.

The following recommended preventive maintenance procedures are based on the average operating conditions of most Alfa Laval agitators. However, you will appreciate that a machine which is subject to rough and dirty conditions will need more frequent attention than one working in ideal conditions. We trust that you will adjust your maintenance programme to meet the demands of your normal operating conditions.

	Replace every:			
	3000 hours or yearly	3000 hours or every 3rd year	6000 hours or every 3rd year	10000 hours or every 3rd year
Shaft sealing for ALS/ALB				
-Not flushed mechanical seal: S1, S2, S3			x	
-Mechanical seal/shut down seal: S3SD		x		
-Flushed mechanical seal: DC, D				x
Shaft sealing for ALT/ALTB				
- Radial seal: R	x			
- Gab seal: G				x
- V-ring seal: V	x			
- Not flushed mechanical seal: S, S3		x		
- Flushed mechanical seal: DC, D				x
Bearing frame for ALS/ALB/ALT/ALTB				
Spider type coupling (if any)				x
Static seals				x
Radial seals	x			
Bearings, rmp<700				x
Bearings, rmp>700			x	
Guidance/support for ALT/ALTB				
Bushing: BS1, BS3			x	
Bushing: BS2, MS2	x			
Bushing: BS1, BS2, MS2	Replace if temperature > 100°C			

Agitator service tool example

Shaft retainer tool - a very useful tool for maintaining top mounted agitators (ALT / ALTB). Designed to support agitators weighing up to 500 kilograms. For more information please refer to the manual.

Description	Item no.
Shaft diameter between Ø30 and Ø60	TE2608084880

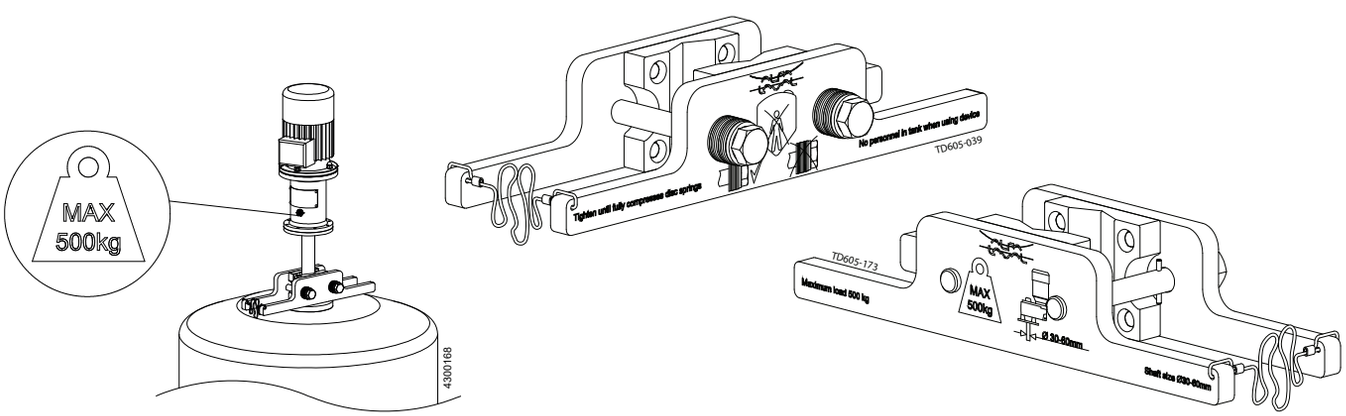

The above guidelines may not apply in all working conditions.

Please contact Alfa Laval for information relating to specific applications.

Service maintenance guidelines

Magnetic mixers

Plan your budget and your downtime

A production stop caused by poor operation or breakdown is costly, both in lost production and expensive servicing.

The most cost-effective way to ensure product safety and production reliability is to plan and carry out service at scheduled intervals.

Using the Alfa Laval guidelines it is easy to plan the relevant maintenance intervals. You can plan your operating budget and the risk of breakdowns is virtually eliminated. Preventive maintenance makes sense financially.

Instruction manuals and service videos

Detailed manuals are supplied with every product. Service and maintenance videos have been created to enable you to service Alfa Laval products in a correct and efficient way. Scan the QR code to access the service videos.

Genuine spare parts and service kits

Alfa Laval Service Kits and Upgrade Kits are available for scheduled maintenance. They contain all the relevant gaskets needed for general service. Using genuine Alfa Laval spare parts guarantees the right quality and composition of materials. Needless to say they come with full traceability. Scan the QR code to access the spare parts catalogue.



Levimag®

Alfa Laval service tools

Alfa Laval has the specific tools required to service Alfa Laval hygienic equipment. These include tools for installing, operating and maintaining our hygienic equipment.

Using genuine spare parts ensures your certificates are still valid.

Example of exploded view - LeviMag® UltraPure

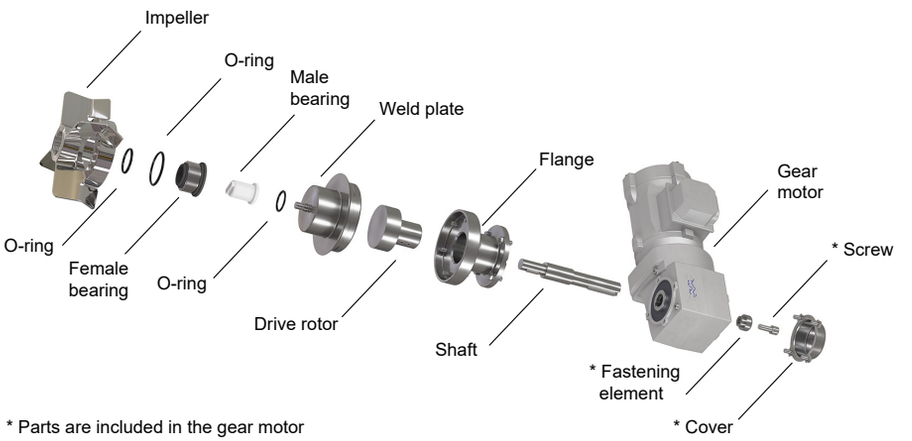

* Parts are included in the gear motor

Inspect the magnetic mixer regularly

Preventive maintenance aims to prevent equipment failures with regular e.g. lubrication and adjustments. Based on experience and knowledge of the running conditions, it is also possible to replace wear parts before they fail. Keeping a maintenance log is a good way to build experience.
After the first 25 hours of operation, listen for abnormal sounds. If you hear any, dismantle the mixer and check all parts for scratches and dents. Alfa Laval recommends that the bearings and O-rings should be checked for dirt and wear after one month of operation. If there is abnormal wear on either component, contact Alfa Laval for further instructions.
Regular inspections should be performed at least every six months or according to local preventive maintenance plans.If any component is to be found damaged during inspection, please contact Alfa Laval for repair and/or replacement parts. All wear parts or damaged parts should be replaced only with Alfa Laval genuine spare parts.

Possible damages on the parts are listed below:

No.	Component	Check zone	Description	Control method	Action
1	Impeller	Surfaces and edges	- scratches, foreign particles - tolerance on bearing surface	- visual - measuring	- cleaning - change bearing
2	Female bearing	Surfaces and edges Thread	- scratches - tolerance on surface - damage on thread	- visual - measuring - visual	- change bearing
3	Male bearing	Surfaces and edges Thread	- scratches - tolerance on surface - damage on thread	- visual - measuring - visual	- change bearing
4	O-rings	Surface	- deformed - cracks	- visual	- change O-rings
5	Weld plate	Surfaces and edges Thread	- damage on thread - damage on outer OD	- visual - measuring	- re-thread, if possible - re-polish, if possible
6	Drive unit	Drive rotor Gear motor Motor	- foreign particles on parts - leaks or noises - cable failure	- visual - audible	- cleaning - change gear motor - repair gear motor

The clearance between female and male bearing should not exceed 0.15 mm. If it does, Alfa Laval recommends changing both bearings.

Scheduled maintenance intervals

To ensure that your Alfa Laval LeviMag® operates efficiently, it is essential to follow a simple preventive maintenance programme, which will keep your machine in good working order. Good maintenance requires careful attention at regular intervals. The following recommended preventive maintenance procedures are based on the average operating conditions of most Alfa Laval magnetic mixers. A mixer exposed to abrasive fluids will need more frequent attention than one working in ideal conditions. The maintenance programme should be adjusted to meet the demands of your normal operating conditions.
Alfa Laval recommends that bearings and O-rings are inspected at least every six months.
Alfa Laval recommends that bearings and O-rings are replaced at least every 6000 operating hours or every three year.

LeviMag® service tool example (for more information please refer to the manual)

Use the male bearing tool with a lifting rod to remove the male bearing and replace the O-ring.



A lifting rod with handle & tool
Lifting rods of different lengths can be purchased from Alfa Laval.



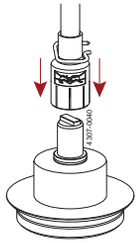

Male bearing tool
It is included when ordering male bearing Service kits.

The above guidelines may not apply in all working conditions.
Please contact Alfa Laval for information relating to specific applications.

Service maintenance guidelines

Tank cleaning equipment

Plan your budget and your downtime

A production stop caused by poor operation or breakdown is costly, both in lost production and expensive servicing.

The most cost-effective way to ensure product safety and production reliability is to plan and carry out service at scheduled intervals.

Using the Alfa Laval guidelines it is easy to plan the relevant maintenance intervals. You can plan your operating budget and the risk of breakdowns is virtually eliminated. Preventive maintenance makes sense financially.

Instruction manuals and service videos

Detailed manuals are supplied with every product. Service and maintenance videos have been created to enable you to service Alfa Laval products in a correct and efficient way. Scan the QR code to access the service videos.

Genuine spare parts and service kits

Alfa Laval Service Kits and Upgrade Kits are available for scheduled maintenance. They contain all the relevant parts needed for general service. Using genuine Alfa Laval spare parts guarantees the right quality and composition of materials. Needless to say they come with full traceability. Scan the QR code to access the spare parts catalogue..

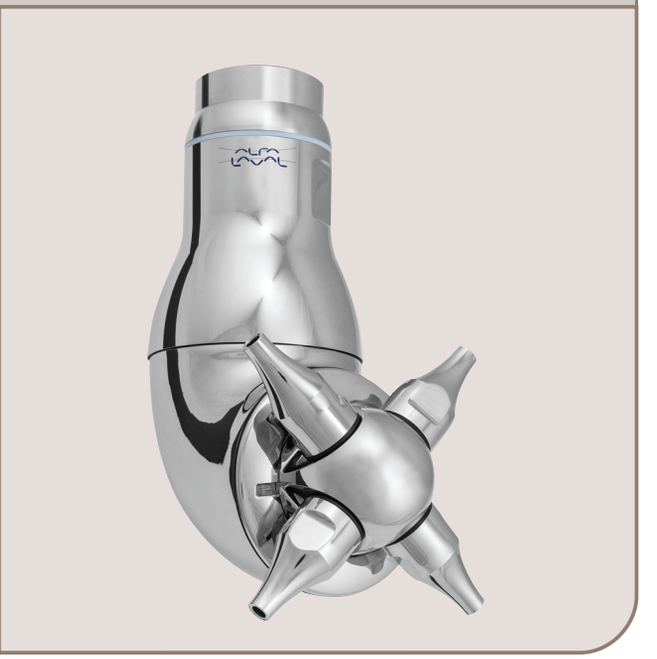

footnote

Alfa Laval service tools

Alfa Laval has the specific tools required to service Alfa Laval hygienic equipment. These include tools for installing, operating and maintaining our hygienic equipment.

Using genuine spare parts ensures your certicates are still valid.

Example of exploded view - TJ40G

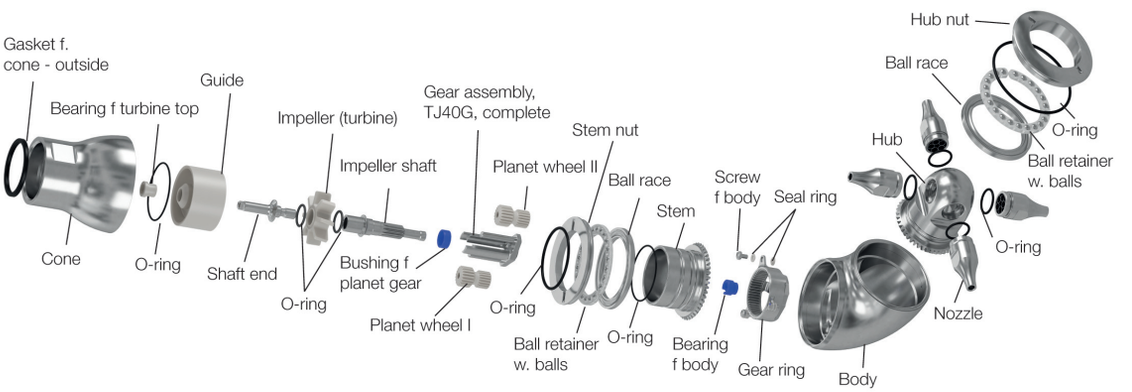

Inspect the tank cleaning equipment regularly

The recommended preventive maintenance programme is based on tank cleaning machines working in average conditions. However, a tank cleaning machine exposed to heavy soiling and recirculation CIP liquid containing abrasives and/or particulates (see manual for strainer recommendations) needs more frequent attention than one exposed to light/no soiling and recirculation with ordinary CIP liquid.

These preventive maintenance guidelines cover Toftejorg rotary jet heads as below:



Scheduled maintenance intervals for Toftejorg tank cleaning:

Application	Hours	Replace service kit every x working hours or y years:					
	Type	150 hours	200 hours or yearly	300 hours or yearly	400 hours or 2rd year	600 hours or 3rd year	800 hours or 4th year
Pharma Biotech personal care etc.	SaniJet 25						
	Inspection kit		x			x	
	Minor service kit				x		
	Major service kit						x
	SaniJet 20 Air						
	Service kit			x			
	SaniJet 20 Media						
	Service kit	x*		x			

* If cleaning medium used is tap water or commonly used CIP solvents, the recommended maintenance interval is 300 hours. However, if special cleaning media are used such as e.g. WFI, the recommended maintenance interval is 150 hours.

Application	Hours	Replace minor or major service kit every x working hours:			
	Type	250 hours	300 hours	500 hours	1000 hours
Food, dairy & beverage	TJ40G				
	Minor service kit			x	x
	Major service kit				x
	TZ-89		x		
	TJ20G			x	
	TZ-74** (SC,BKV)		x		
	TZ-79**		x		
Fine chemical & industry	MultiJet 25			x	
	MultiJet 40		x		
	MultiJet 50		x		
	MultiJet 65	x			
	TZ-66**		x		
	TZ-67**		x		
	TZ-750	x			

** Need conversion overview or replace suggestion from TZ67/66 and TZ-74/79 to TJ40G please contact Alfa Laval.
All recommended service kits can be found in the manual for the specific machine.

Scheduled maintenance intervals for Gamajet tank cleaning

The Alfa Laval Gamajet should be washed out with clean water after each use to remove any foreign material or soft substances left in the machine that could harden during storage and cause the Alfa Laval Gamajet to seize or lock up. A clean water rinse through the Alfa Laval Gamajet will also wash out any residues of chemical cleaners or recirculated wash water that could adversely affect the O-rings during prolonged contact in storage. The best way to store the machine is to stand it up with the inlet connection facing down.

This preventive maintenance guidelines cover Gamajet rotary jet heads:

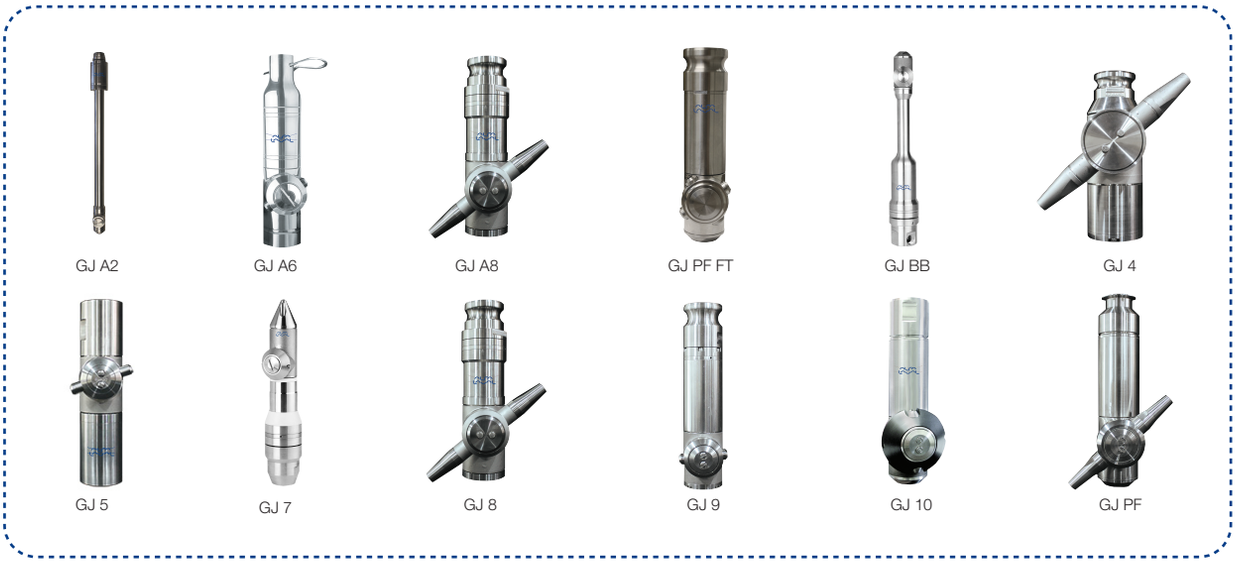

An interval of 100 hours is recommended initially. If all of the components are found to be in acceptable condition after the first 100 hours, the Alfa Laval Gamajet may then be inspected and routine preventive maintenance performed after the recommended hours of operation, depending on the severity of use.

All the bearings, bushings, seals and O-rings are wear parts. Ideally, they should all be replaced as a group., If just one bearing or seal is worn or damaged, replace both it and its mate, not just the worn or damaged part.

Gamajet recommended maintenance hours are as shown below:

Application	An interval of 100 hours is recommended initially.						
	Type	100 hours	100-200 h	300-500 h	400-600 h	500-700 h	600-800 h
Food,dairy & beverage	GJ A2	x			x		
	GJ A6	x		x			
	GJ A8	x		x		x	
	GJ PF FT	x					x
Fine chemical & industry	GJ BB	x			x		
	GJ 4	x				x	
	GJ 5	x		x			
	GJ 7	x	x				
	GJ 8	x		x			
	GJ 9	x		x			
	GJ 10	x				x	
	GJ PF	x				x	

All recommended service kits can be found in the manual for the specific machine.

The above guidelines may not apply in all working conditions.
Please contact Alfa Laval for information relating to specific applications.

How to service Alfa Laval products in a correct and efficient way

360° service & maintenance videos for tank equipment

As part of the 360° Service Portfolio offering, 22 service & maintenance videos have been introduced, covering 5 core products. The service & maintenance videos have been created to enable you to service Alfa Laval products in a correct and efficient way

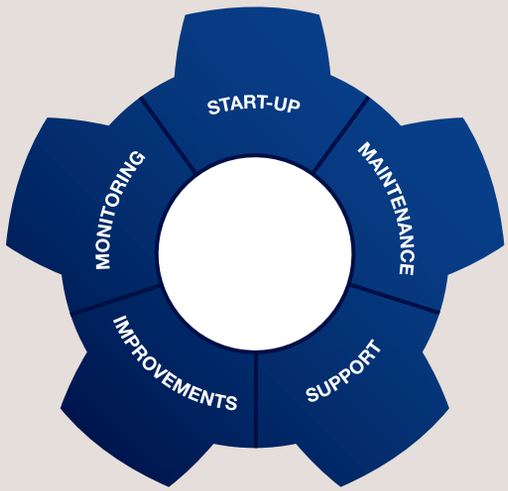

Features

The following features make the service & maintenance videos easy to work with:

- Short and informative - focus on vital service steps
- Clear demonstrations of how to use the different tools
- English speak
- Available on YouTube and Alfa Laval Anytime, our eBusiness

Alfa Laval YouTube channel

In Alfa Laval's YouTube channel, you can see videos about Alfa Laval in general and about our products in the food, dairy, beverage and pharma industries. Subscribe - and get notified when we upload a new video.

Products covered

- Alfa Laval TJ40G

Alfa Laval service kits

Alfa Laval TJ40G rotary jeg head - assemble

Alfa Laval TJ40G rotary jeg head - disassemble

Alfa Laval TJ40G rotary jeg head - minor service kit

Alfa Laval TJ40G rotary jeg head - major service kit

Maintenance of Alfa Laval agitator

Alfa Laval agitator with S seal

Alfa Laval agitator with S2 seal

Alfa Laval agitator with S3 seal

Alfa Laval agitator with D seal

1.2 Agitators

For mixing or stirring your products.



Spare parts

ALT-SB-15 (with aeration) 1.2.30
ALT-SB-15 (without aeration) 1.2.32
ALT-SB-15 (with and without aeration) 1.2.34
ALT-SB-15 - mounting tools 1.2.42
ALTB-SB-20-AE (with aeration) 1.2.46
ALTB-SB-20-AE (without aeration) 1.2.48
ALTB-SB-20-(AE) (with and without aeration) 1.2.50
ALTB-SB-20-(AE) - mounting tools 1.2.66
ALTB-SB-30-AE (with aeration) 1.2.68
ALTB-SB-30 (without aeration) 1.2.70
ALTB-SB-30-(AE) (with and without aeration) 1.2.72
ALTB-SB-30-(AE) - mounting tools 1.2.86
ALS / ALB - Drive end 1.2.88
ALS / ALB - Wet end 1.2.90
ALS / ALB - Bearing frame, B 1.2.92
ALS / ALB - Bearing frame, BC 1.2.96

1.2 Agitators

For mixing or stirring your products.

ALS / ALB - Shaft seal type S1 . . . . . 1.2.98
ALS / ALB - Shaft seal type S2 . . . . . 1.2.100
ALS / ALB - Shaft seal type S3 . . . . . 1.2.102
ALS / ALB - Shaft seal type D 1.2.106
ALS / ALB - Shaft seal type DC 1.2.108
ALT / ALTB - Drive end 1.2.110
ALT / ALTB - Wet end 1.2.112
ALT / ALTB - Bearing frame, B 1.2.114
ALT / ALTB - Bearing frame, BC 1.2.118
ALT / ALTB - Shaft seal type S 1.2.120
ALT / ALTB - Shaft seal type S3 . . . . . 1.2.122
ALT / ALTB - Shaft seal type D 1.2.126
ALT / ALTB - Shaft seal type DC 1.2.128
ALT / ALTB - Shaft seal type R 1.2.132
ALT / ALTB - Shaft seal type G 1.2.134
ALT / ALTB - Shaft seal type V 1.2.136
ALT / ALTB - Intermediate steady bearing support 1.2.138
ALT / ALTB - Bottom support, type 3 . . . . . 1.2.140
ALS SD - Main components 1.2.142
ALS SD - Lantern, complete 1.2.144
ALS SD - Shaft seal, type S3SD 1.2.146
ALS SD - Tools 1.2.148
ALT ATEX, marking II 1/2G... or II 1/2D... . . . . 1.2.150
ALT ATEX, marking II 2G... or II 2D... . . . . 1.2.178
ALT ATEX, shaft divided, marking II 1/2G... or II 1/2D... . . . . 1.2.202
ALT ATEX, shaft divided, marking II 2G... or II 2D... . . . . 1.2.214

Spare parts for obsolete products
ALT / ALTB - Bottom support, type 1 . . . . . 1.2.226
ALT / ALTB - Bottom support, type 2 . . . . . 1.2.230

Drawing (item number 9614322301)

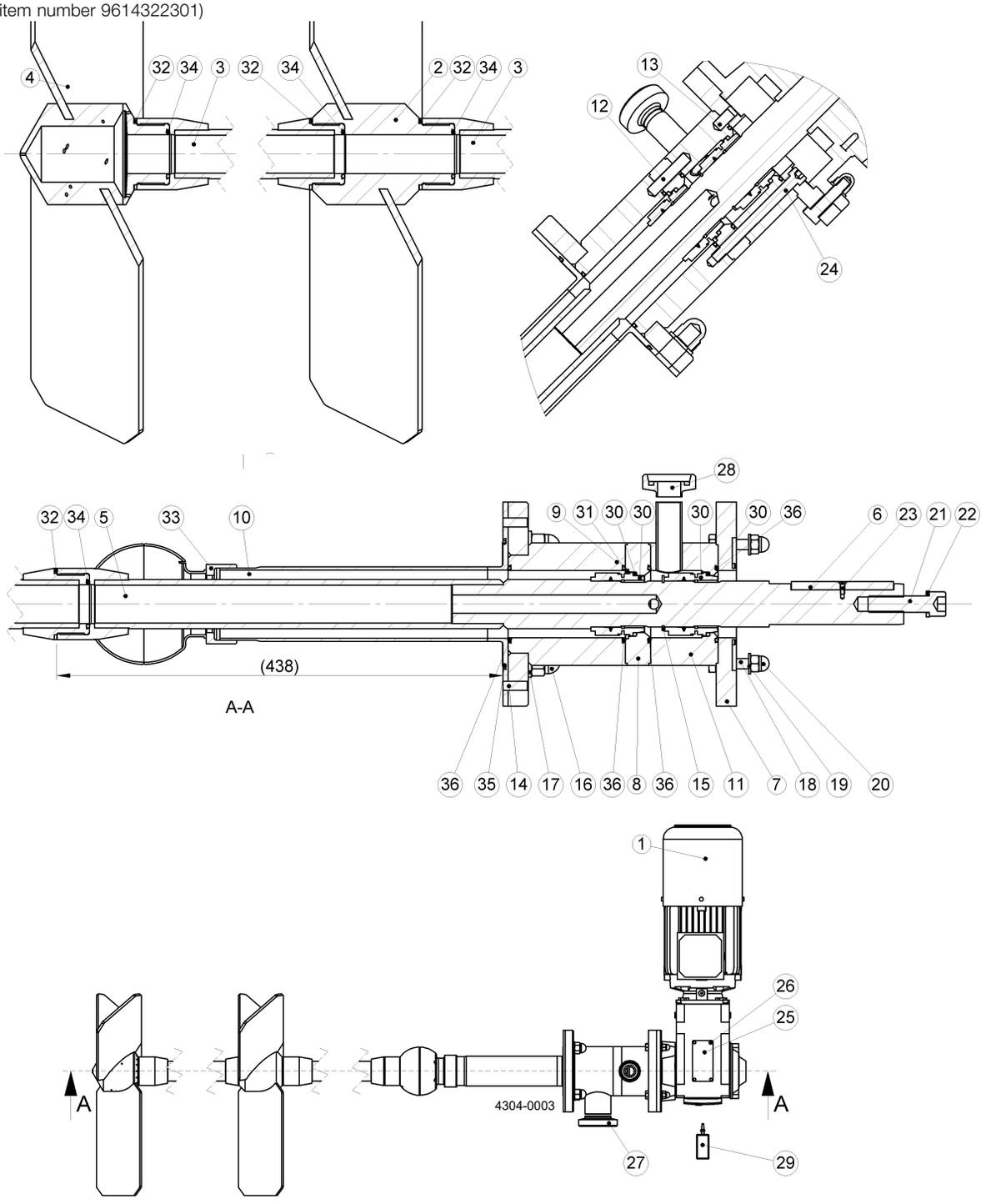

Pos		Qty	Denomination	Item no.	Drawing no.	Material
Part list (item number 9614322301)						
1		1	Gear motor	See table*	96143250	NA
2		1	Propeller for Agitator, Upper	See table*	96143199	14.404
3		2	Agitator shaft, Welded	See table*	96143204	14.404
4		1	Propeller, Lower	See table*	96143275	14.404
5		1	Gear shaft	9614328601	96143286	14.404
6		1	Parallel key	9614313403	96143134	1.4307/1.4301
7		1	Flange, Upper for Agitator	9614318301	96143183	1,4404
8		1	Intermedia coupling welded	9614319701	96143197	14.404
9		1	Console for Agitator, Welded	9614317901	96143179	14.404
10		1	Tube, CIP for spray ball	9614318502	96143185	14.404
11		1	Gear console with aeration	9614319301	96143193	14.404
12		2	Pin	9614313504	96143135	14.404
13		2	Pin	9614313503	96143135	14.404
14		2	Pin	9614313501	96143135	14.404
15		1	Circlip, outer	TE2601000199	None	A2
16		4	Cap nut	TE2601000058	None	A2
17		4	Washer	TE2601000348	None	A2
18		4	Screw	TE2601000630	None	A2
19		4	Washer	TE2601000346	None	A2
20		4	Cap nut	TE2601000355	None	A2
21		1	Screw	TE2601000047	None	A2
22		1	Washer	TE2601000169	None	A2
23		1	Countersink	9614171065	None	A2
24		4	Screw	TE2601000631	None	A2
25		1	Name plate	TE2601041560	4156	AISI 304L
26		4	Rivet	TE2601000202	None	A2
27		1	NW65	3131800111	None	14.404
28		1	NW25	3131800071	None	14.404
29	□	1	Loctite 2701, 10 ml	9614314101	96143141	NA
30	□	2	Single Mechanical seal	9614321601	96143216	EN 12756: Y1/Q1/E/G/G
31	□	1	Gasket support	9614319201	96143192	1,4404
32	□	4	Gasket	9614311803	96143118	PTFE
33	□	1	Spray ball bearing	9614329901	96143299	PTFE
34	□	4	O-ring	9614312702	96143127	EPDM
35	□	1	O-ring	9614312704	96143127	EPDM
36	□	4	O-ring	9614312703	96143127	EPDM

* Not part of top level item number - item number must be selected on drawing
Item numbers marked ❑ are included in the Spare part kit

		Item no.
□	**Spare part kit**	**9614322302**

Drawing (item number 9614328901)

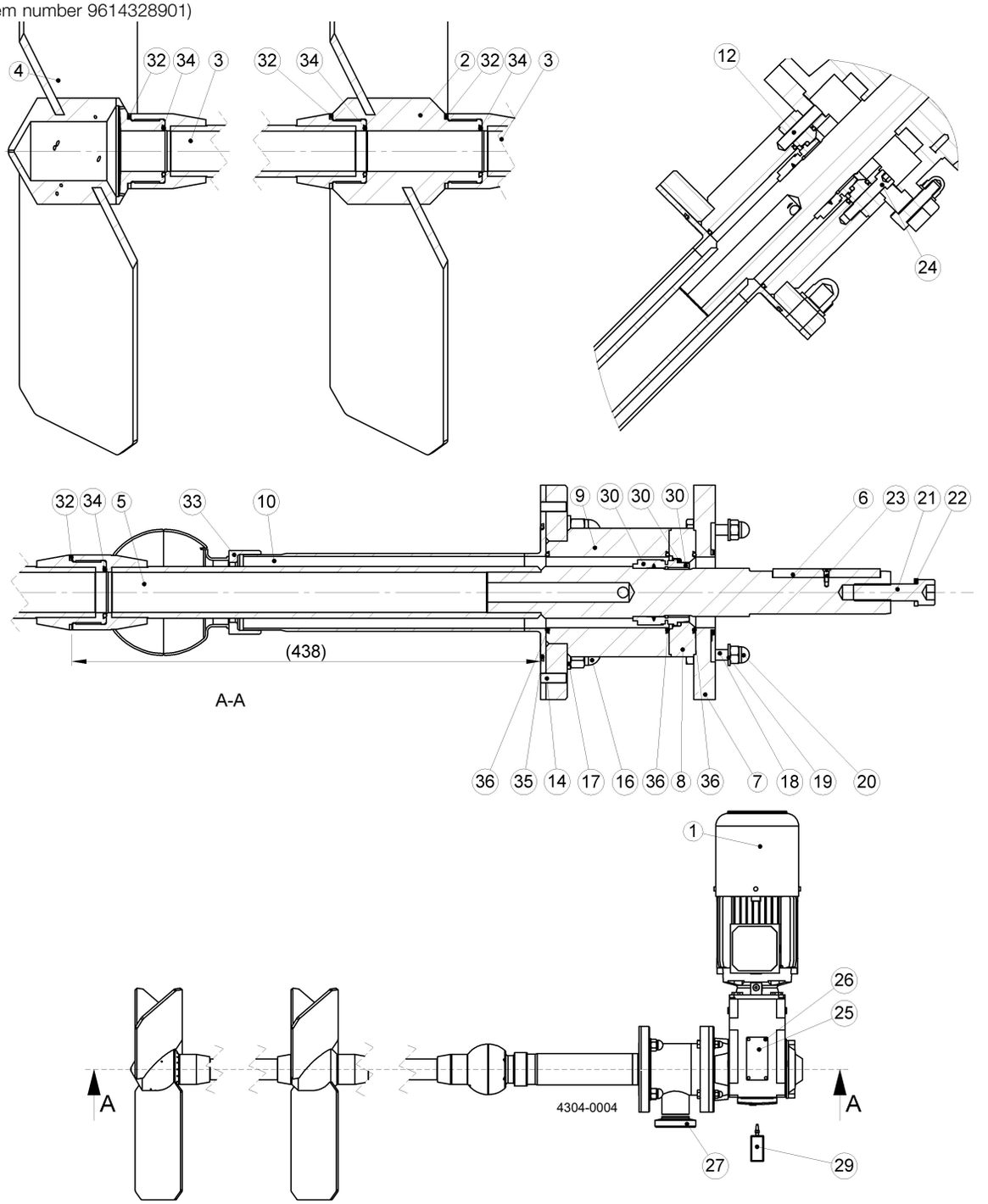

Pos		Qty	Denomination	Item no.	Drawing no.	Material
Part list (item number 9614328901)						
1		1	Gear motor	See table*	96143250	NA
2		1	Propeller for Agitator, Upper	See table*	96143199	14.404
3		2	Agitator shaft, Welded	See table*	96143204	14.404
4		1	Propeller, Lower	See table*	96143275	14.404
5		1	Gear shaft	9614329001	96143290	14.404
6		1	Parallel key	9614313403	96143134	1.4307/1.4301
7		1	Flange, Upper for Agitator	9614318301	96143183	1,4404
8		1	Intermedia coupling welded	9614319701	96143197	14.404
9		1	Console for Agitator, Welded	9614317901	96143179	14.404
10		1	Tube, CIP for spray ball	9614318502	96143185	14.404
12		2	Pin	9614313504	96143135	14.404
14		2	Pin	9614313501	96143135	14.404
16		4	Cap nut	TE2601000058	None	A2
17		4	Washer	TE2601000348	None	A2
18		4	Screw	TE2601000630	None	A2
19		4	Washer	TE2601000346	None	A2
20		4	Cap nut	TE2601000355	None	A2
21		1	Screw	TE2601000047	None	A2
22		1	Washer	TE2601000169	None	A2
23		1	Countersink	9614171065	None	A2
24		4	Screw	9611990352	None	A2
25		1	Name plate	TE2601041560	4156	AISI 304L
26		4	Rivet	TE2601000202	None	A2
27		1	NW65	3131800111	None	14.404
29	❑	1	Loctite 2701, 10 ml	9614314101	96143141	NA
30	❑	1	Single Mechanical seal	9614321601	96143216	EN 12756:
32	❑	4	Gasket	9614311803	96143118	1,4404
33	❑	1	Spray ball bearing	9614329901	96143299	PTFE
34	❑	4	O-ring	9614312702	96143127	PTFE
35	❑	1	O-ring	9614312704	96143127	EPDM
36	❑	3	O-ring	9614312703	96143127	EPDM

* Not part of top level item number - item number must be selected on drawing
Item numbers marked ❑ are included in the Spare part kit

		Item no.
❑	**Spare part kit**	**9614328902**

Gear motor, variants (drawing no. 96143250)	
Gear motor specification:	
Type:	High efficient Helical Bevel
Shaft material:	1,4057
Motor Temperature Protection:	PTC resistor, 3x155°C
Motor Backstop / Freewheel bearing:	Yes
Lubrication type*:	Food-compatible oil ISI VG 220
Lubrication supplier*:	Klüber
Lubrication classification*:	CLP PG H1 220
Lubrication quantity:	1,2 ltr
Surface colour:	RAL 5010
Surface treatment:	Pain coat 3,0, 110-150 µm
Surface corrosion class:	EN 12944, C2
Labelling:	According to local legislation

Pos	Qty	Denomination	Drawing no.
		Gear motor variants	96143250
		Gear motor, specifications	See table

* For more information and certificate see ALT-SB-15 Instruction Manual.
Please contact Alfa Laval if a new gear motor is required. In this way it is ensured that the new gear motor fulfils all local legislation.

Propeller, Upper, Drawing (Drawing number 96143199):

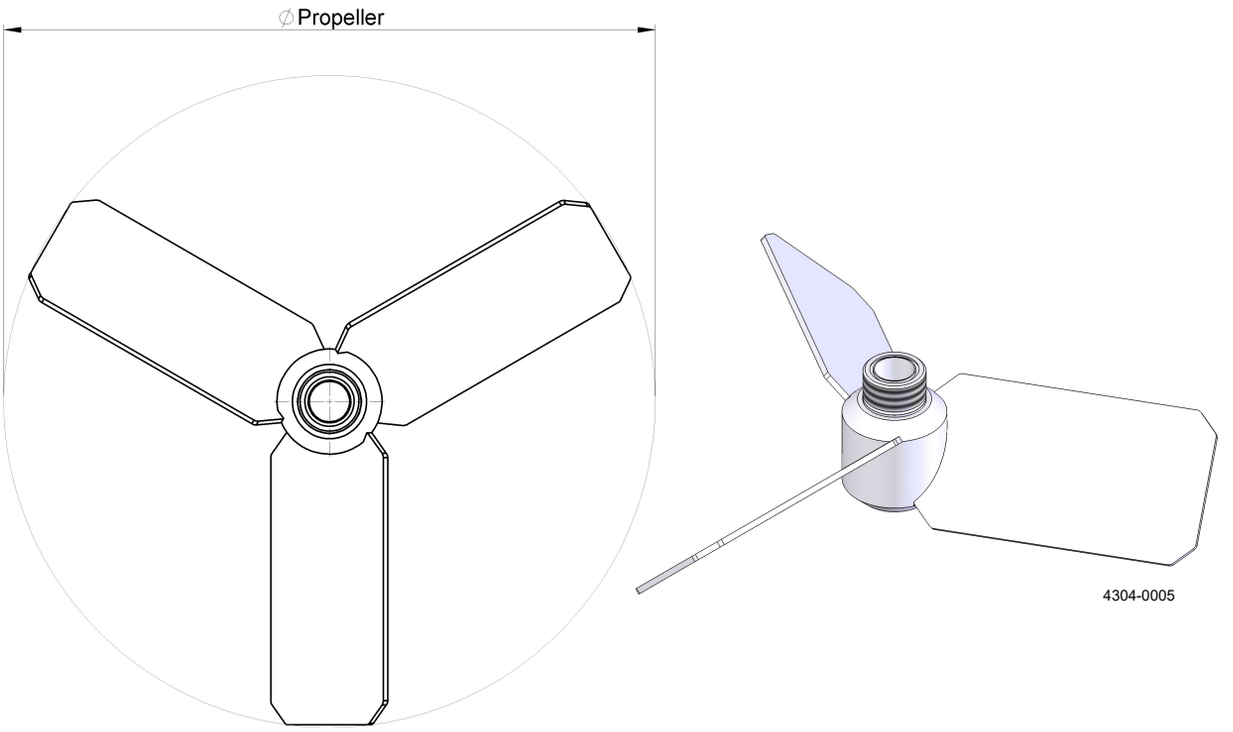

Pos	Qty	Denomination	Item no.
		Propeller, Upper, Variants	96143199

Item #	Drawing #	ØPropeller / [mm]
9614319901	96143199	614
9614319902	96143199	664
9614319903	96143199	713
9614319904	96143199	763
9614319905	96143199	813
9614319906	96143199	863
9614319907	96143199	912
9614319908	96143199	962
9614319909	96143199	1012
9614319910	96143199	1062
9614319911	96143199	1112
9614319912	96143199	564
9614319913	96143199	515
9614319914	96143199	466
9614319915	96143199	416
9614319916	96143199	367

Agitator shaft, welded, Drawing (Drawing number 96143204):

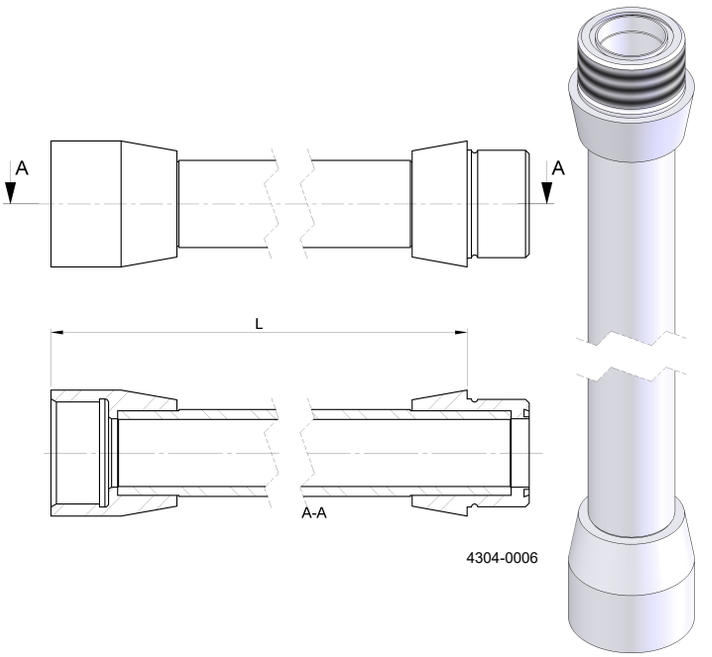

Pos	Qty	Denomination	Item no.
		Agitator shaft, welded	96143204

Item #	Drawing #	L / [mm]
9614320401	96143204	800
9614320402	96143204	900
9614320403	96143204	1000
9614320404	96143204	1100
9614320405	96143204	1200
9614320406	96143204	1300
9614320407	96143204	1400
9614320408	96143204	1500
9614320409	96143204	1600
9614320410	96143204	1700
9614320411	96143204	1800
9614320412	96143204	1900
9614320413	96143204	2000
9614320414	96143204	2100
9614320415	96143204	2200
9614320416	96143204	2300
9614320417	96143204	2400
9614320418	96143204	2500
9614320419	96143204	2600
9614320420	96143204	500
9614320421	96143204	550
9614320422	96143204	600
9614320423	96143204	650
9614320424	96143204	700
9614320425	96143204	750
9614320426	96143204	850
9614320427	96143204	950
9614320428	96143204	2700
9614320429	96143204	2800
9614320430	96143204	2900
9614320431	96143204	3000

Propeller, Lower, Drawing (Drawing number 96143275):

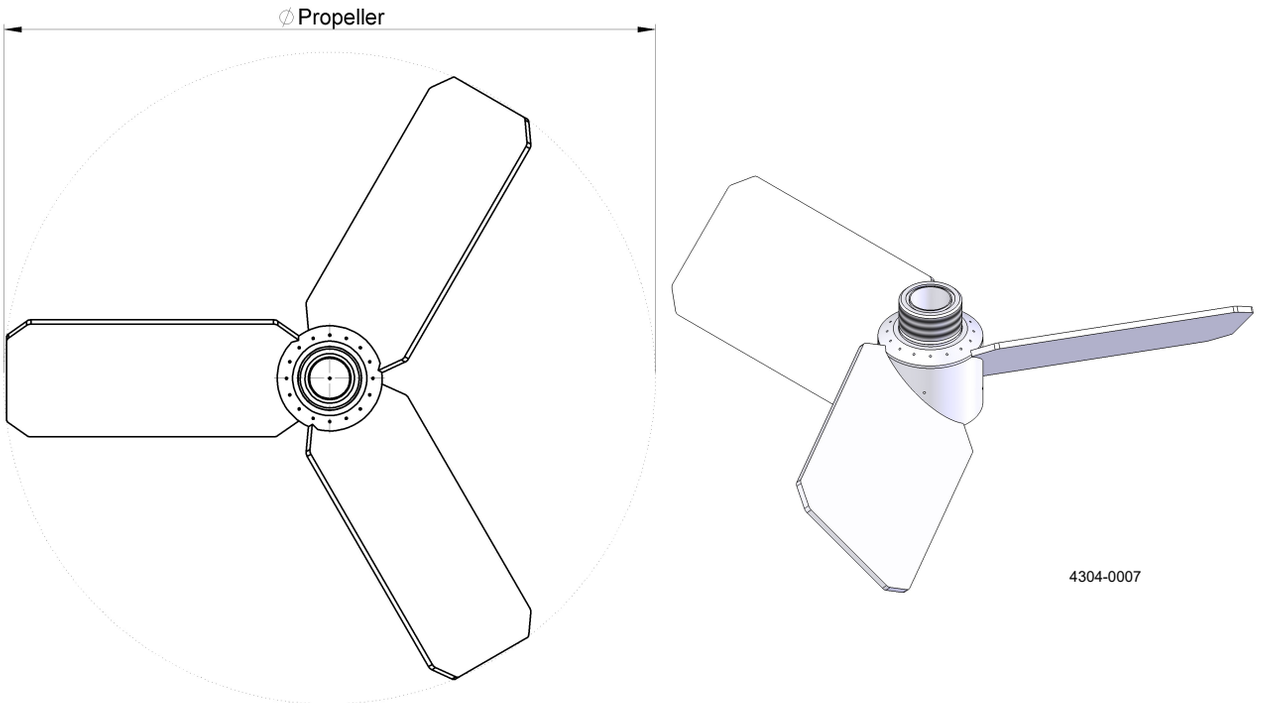

Pos	Qty	Denomination	Item no.
		Propeller, Lower, Variants , 96143275	

Item #	Drawing #	ØPropeller / [mm]
9614327501	96143275	613
9614327502	96143275	663
9614327503	96143275	712
9614327504	96143275	762
9614327505	96143275	812
9614327506	96143275	862
9614327507	96143275	912
9614327508	96143275	962
9614327509	96143275	1011
9614327510	96143275	1061
9614327511	96143275	1111
9614327512	96143275	563
9614327513	96143275	514
9614327514	96143275	464
9614327515	96143275	415
9614327516	96143275	366

Mounting tool, drawing (Item number 9614324701)
The mounting tool must be used for correct installation of SB Agitator Type 15

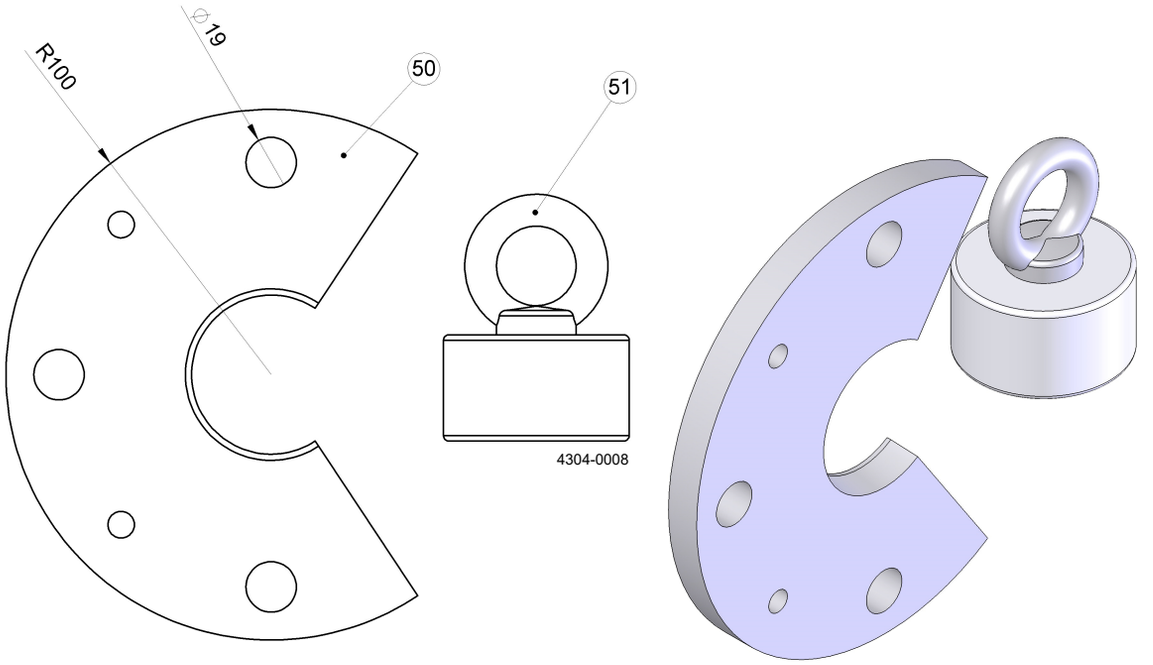

Mounting Tool, Parts list (Item number 9614324701)

Pos	Qty	Denomination	Item no.	Drawing no.	Material
Mounting Tool, Parts list (Item number 9614324701):					
50	1	Tool – Fastener plate	9614324501	96143245	Aluminium 6061
51	1	Tool – Lifting eye	9614324401	96143244	Alloy 1.4404 / A2

The mounting tool must be used for correct installation of SB Agitator Type 15

Welding Flange (Counter Flange), Drawing (Drawing number 9614323701)

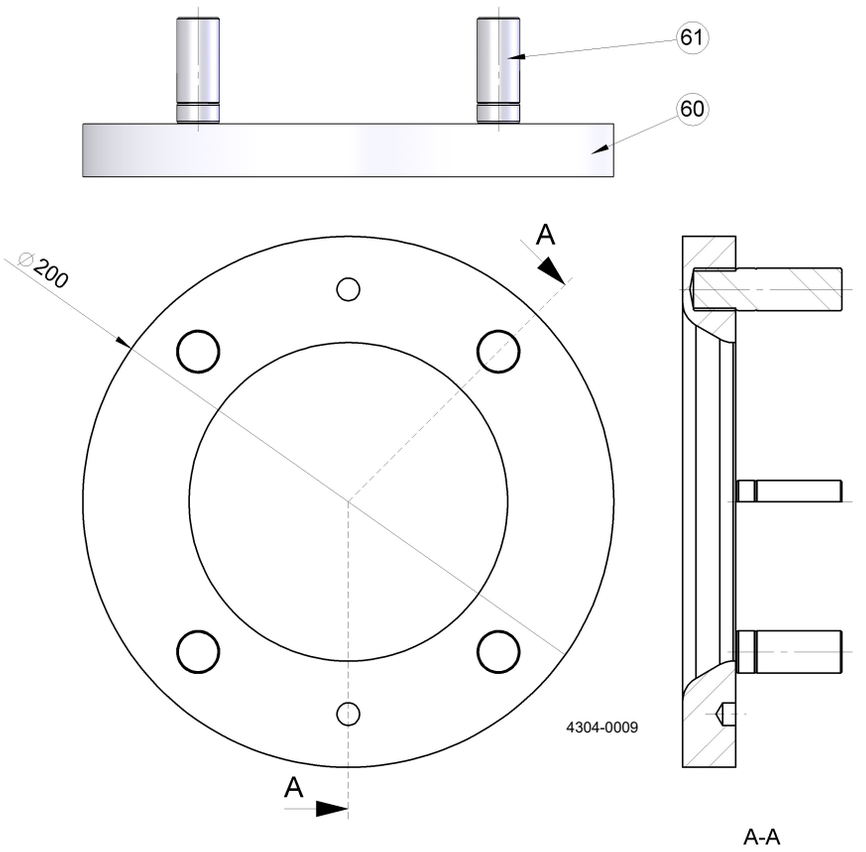

Welding Flange (Counter Flange), Drawing (Drawing number 9614323701)

Pos	Qty	Denomination	Item no.	Drawing no.	Material

Welding Flange (Counter Flange), Parts List (Item number 9614323701):

60	1	Welding Flange	9614323601	96143236	14.404
61	4	Stud	TE2601000672	None	A2

Drawing (item number 9614313201)

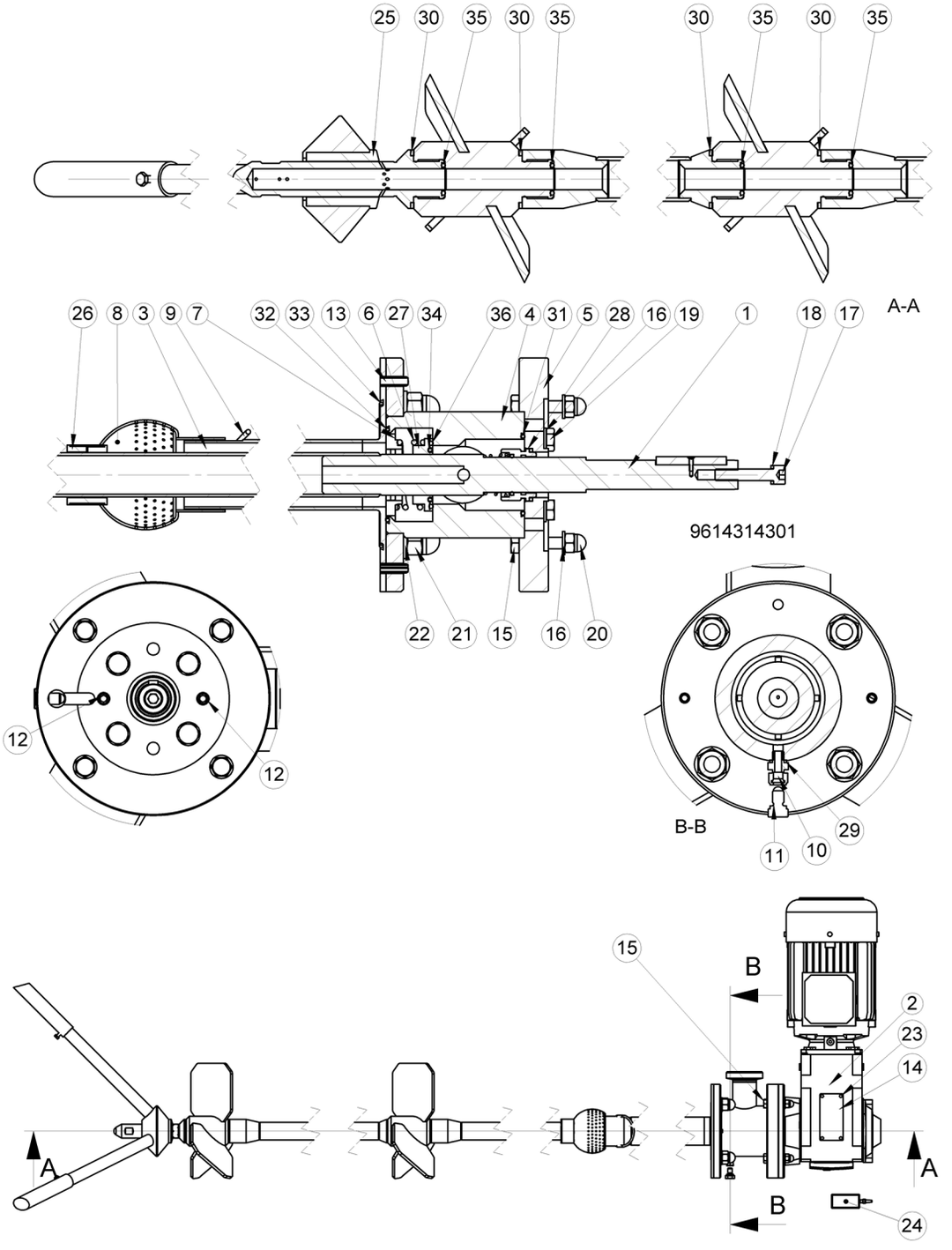

Pos		Qty	Denomination	Item no.	Drawing no.	Materials
Part list (item number 9614313201):						
1		1	Shaft, Propeller and Bottom console, type 20	See table on drawing*	96143142	See assembly
2		1	Gearmotor for type 20	See table on drawing*	96143133	NA
3		1	Tube, CIP for spray ball	See table on drawing*	96143085	1,4404
4		1	Console for Agitator, Welded	9614307901	96143079	1,4404
5		1	Flange, Upper for Agitator	9614308301	96143083	1,4404
6		1	Pressure spring 1 bar	9614311401	96143114	1,431
7		1	Spring guide, Agitator type 20	9614309101	96143091	1,4404
8		1	Spray ball Ø94-2T, Ø63,5	9614309301	96143093	1,4404
9		1	Spring lock for spray ball	9614308901	96143089	1,4404
10		1	Union	9614312001	96143120	1,4401
11		1	Plug for 2" and 3" P.E	9614311201	96143112	1,4307/1,4301
12		2	Guide Pin	9614313502	96143135	A2
13		2	Guide Pin	9614313501	96143135	A2
14		1	Name plate	TE2601041560	4156	AISI 304L
15		4	Screw	TE2601000017	None	A2
16		8	Washer	TE2601000346	None	A2
17		1	Screw	TE2601000328	None	A2
18		1	Washer	TE2601000166	None	A2
19		4	Screw	TE2601000208	None	A2
20		4	Cap nut	TE2601000355	None	A2
21		4	Cap nut	TE2601000058	None	A2
22		4	Washer	TE2601000348	None	A2
23		4	Rivet	TE2601000202	None	A2
24	❑	1	Loctite 2701, 10 ml	9614314101	96143141	NA
25	❑	1	Bearing for bottom console	9614311001	96143110	PTFE AF 1022/Acoflon 809
26	❑	1	Spray ball bearing	9614309201	96143092	PVDF
27	❑	1	Aeration seal box	9614309001	96143090	PTFE AF 1111/Acoflon 802
28	❑	1	Mechanical seal	9614311301	96143113	EN 12756: GBEGG
29	❑	1	Gasket	9614311801	96143118	PA (Nylon)
30	❑	4	Gasket	9614311802	96143118	PTFE
31	❑	1	O-ring	9614312706	96143127	EPDM
32	❑	1	O-ring	9614312707	96143127	EPDM
33	❑	1	O-ring	9614312704	96143127	EPDM
34	❑	1	O-ring	9614312702	96143127	EPDM
35	❑	4	O-ring	9614312701	96143127	EPDM
36	❑	1	O-ring	9614312708	96143127	EPDM

* Not part of top level item number - item number must be selected on drawing
Item numbers marked ❑ are included in the Spare part kit

		Item no.
❑	**Spare part kit**	**9614313202**

Drawing (item number 9614311901):
As shown on “ALTB-SB-20-AE with aeration” but without part no: 6*, 7*, 27*, 34* and 36*

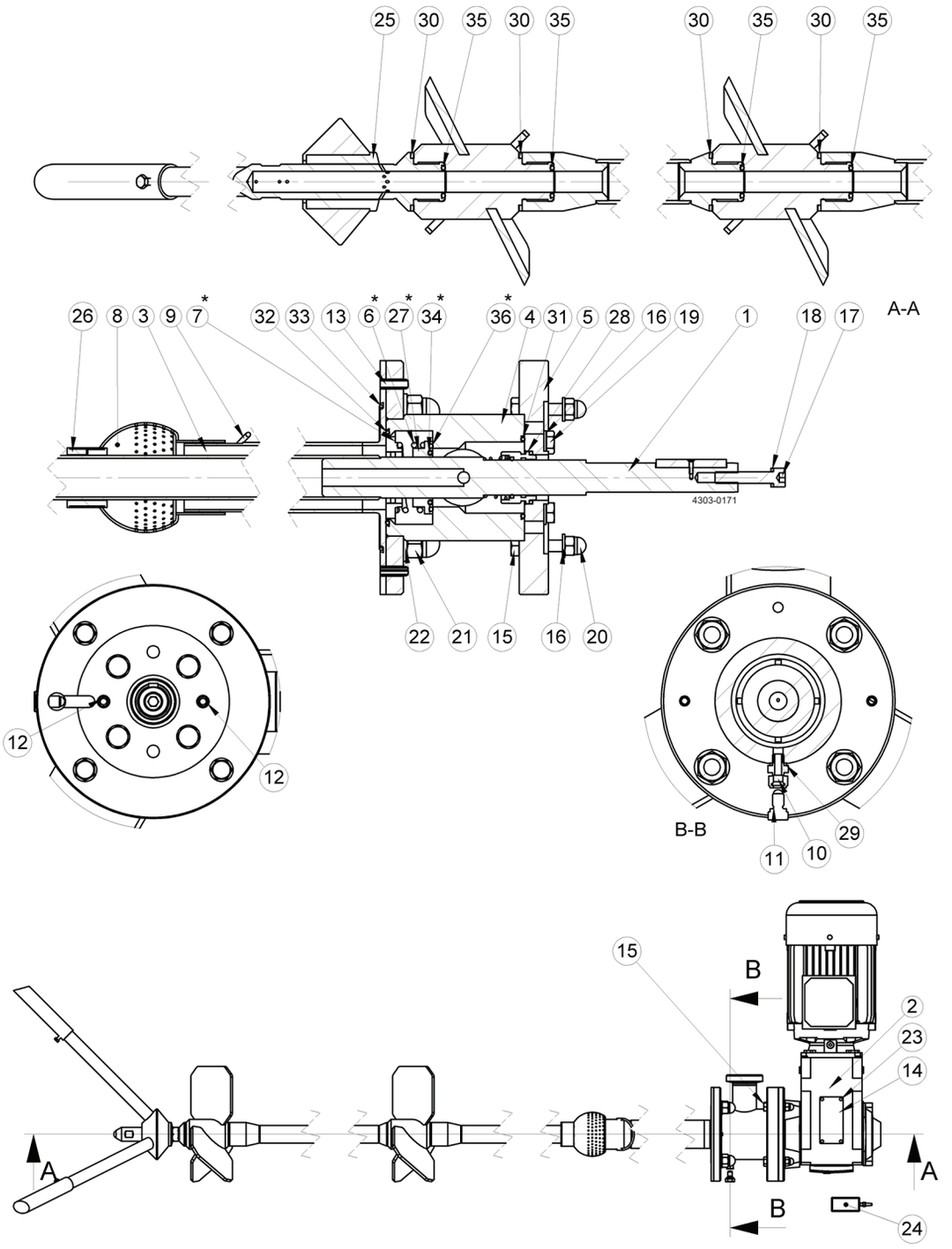

Pos		Qty	Denomination	Item no.	Drawing no.	Materials
Part list (item number 9614311901):						
1		1	Shaft, Propeller and Bottom console, type 20	See table on drawing*	96143142	See assembly
2		1	Gearmotor for type 20	See table on drawing*	96143133	NA
3		1	Tube, CIP for spray ball	See table on drawing*	96143085	1,4404
4		1	Console for Agitator, Welded	9614307901	96143079	1,4404
5		1	Flange, Upper for Agitator	9614308301	96143083	1,4404
8		1	Spray ball Ø94-2T, Ø63,5	9614309301	96143093	1,4404
9		1	Spring lock for spray ball	9614308901	96143089	1,4404
10		1	Union	9614312001	96143120	1,4401
11		1	Plug for 2" and 3" P.E	9614311201	96143112	1,4307/1,4301
12		2	Guide Pin	9614313502	96143135	A2
13		2	Guide Pin	9614313501	96143135	A2
14		1	Name plate	TE2601041560	4156	AISI 304L
15		4	Screw	TE2601000017	None	A2
16		8	Washer	TE2601000346	None	A2
17		1	Screw	TE2601000328	None	A2
18		1	Washer	TE2601000166	None	A2
19		4	Screw	TE2601000208	None	A2
20		4	Cap nut	TE2601000355	None	A2
21		4	Cap nut	TE2601000058	None	A2
22		4	Washer	TE2601000348	None	A2
23		4	Rivet	TE2601000202	None	A2
24	❑	1	Loctite 2701, 10 ml	9614314101	96143141	NA
25	❑	1	Bearing for bottom console	9614311001	96143110	PTFE AF 1022/Acoflon 809
26	❑	1	Spray ball bearing	9614309201	96143092	PVDF
28	❑	1	Mechanical seal	9614311301	96143113	EN 12756: GBEGG
29	❑	1	Gasket	9614311801	96143118	PA (Nylon)
30	❑	4	Gasket	9614311802	96143118	PTFE
31	❑	1	O-ring	9614312706	96143127	EPDM
32	❑	1	O-ring	9614312707	96143127	EPDM
33	❑	1	O-ring	9614312704	96143127	EPDM
35	❑	4	O-ring	9614312701	96143127	EPDM

* Not part of top level item number - item number must be selected on drawing
Item numbers marked ❑ are included in the Spare part kit

		Item no.
❑	**Spare part kit**	**9614311902**

Shaft, Propeller and Bottom console assembly, Drawing (Item number 9614314201):

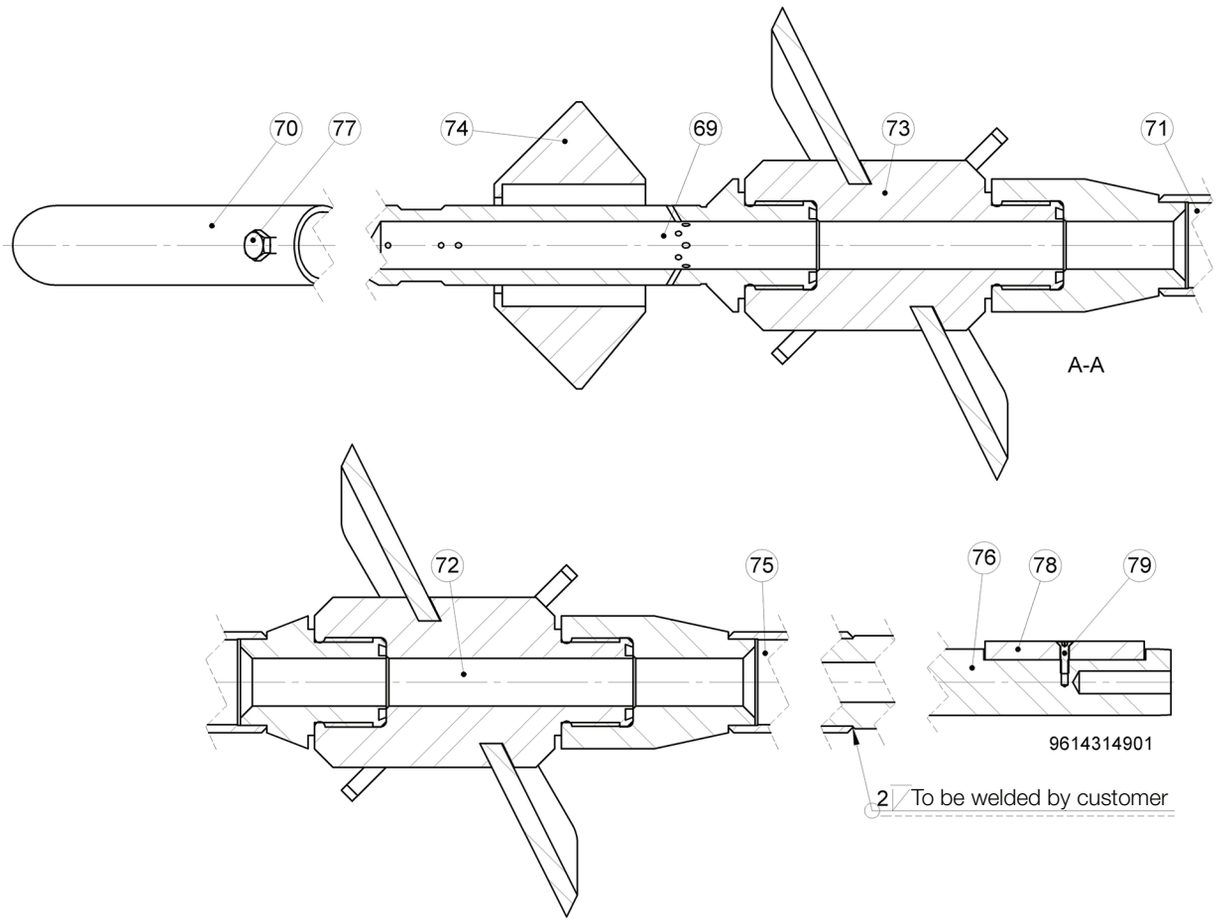

Pos	Qty	Denomination	Item no.	Drawing no.	Material
Shaft, Propeller and Bottom console assembly, Part List (Item number 9614314201):					
69	1	Guide spindle for bearing	9614311101	96143111	1,4404
70	3	Adjustable leg for bottom console	See table on drawing*	96143109	1,4404
71	1	Agitator shaft, Welded	See table on drawing*	96143097	1,4404
72	1	Propeller for agitator	See table on drawing*	96143103	1,4404
73	1	Propeller for agitator	See table on drawing*	96143103	1,4404
74	1	Bottom console for agitator	See table on drawing*	96143106	1,4404
75	1	Agitator shaft, Welded	See table on drawing*	96143101	1,4404
76	1	Shaft, Upper for Agitator	9614308401	96143084	1,4404
77	3	Screw	TE2601000098	None	A2
78	1	Parallel Key	9614313401	96143134	1.4307/1.4301
79	1	Screw	TE2601000537	None	A2

* Not part of top level item number - item number must be selected on drawing

Adjustable leg for bottom console, Drawing (Drawing number 9614324109):

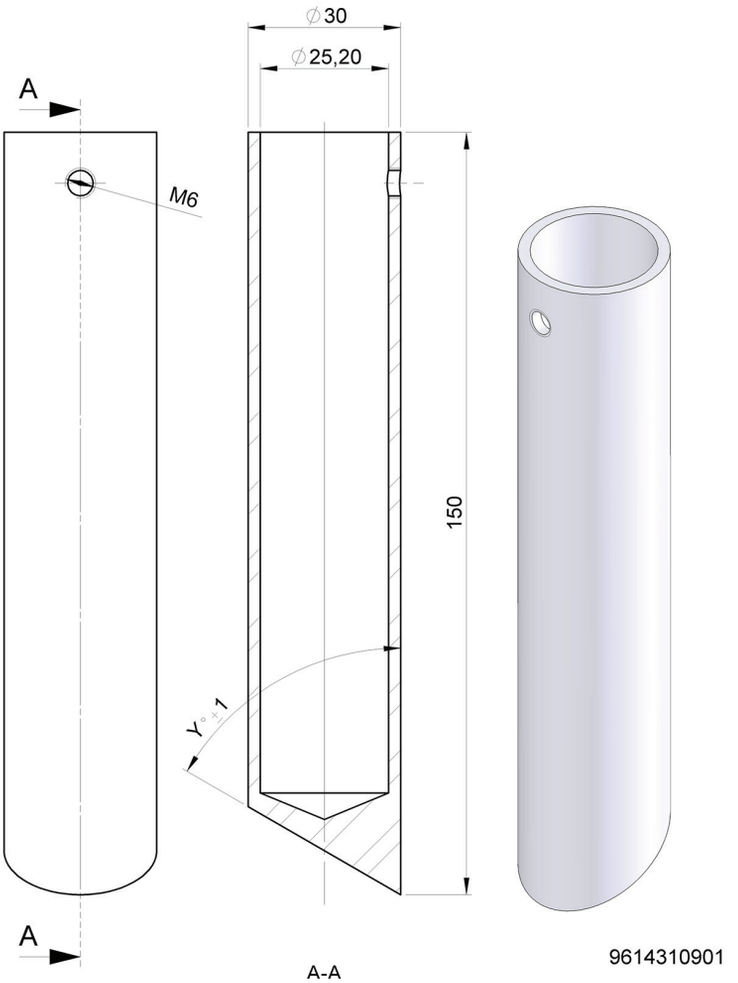

Adjustable leg for bottom console, Variants (Drawing number 9614324109):

Item No.	Drawing No.	Y / [°]
9614310901	96143109	90,0
9614310902	96143109	87,5
9614310903	96143109	85,0
9614310904	96143109	82,5
9614310905	96143109	80,0
9614310906	96143109	77,5
9614310907	96143109	75,0
9614310908	96143109	72,5
9614310909	96143109	70,0
9614310910	96143109	67,5
9614310911	96143109	65,0
9614310912	96143109	62,5
9614310913	96143109	60,0

Agitator shaft, welded, Drawing (Drawing number 96143097):

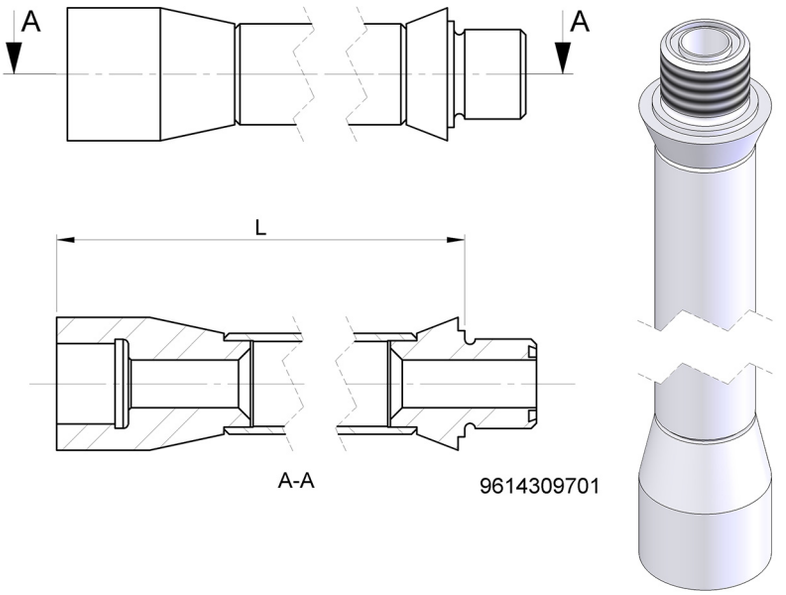

Agitator shaft, welded, Variants (Drawing number 96143097):

Item No.	Drawing No.	L / [mm]
9614309701	96143097	500
9614309702	96143097	600
9614309703	96143097	700
9614309704	96143097	800
9614309705	96143097	900
9614309706	96143097	1000
9614309707	96143097	1100
9614309708	96143097	1200
9614309709	96143097	1300
9614309710	96143097	1400
9614309711	96143097	1500
9614309712	96143097	1600
9614309713	96143097	1700
9614309714	96143097	1800
9614309715	96143097	1900
9614309716	96143097	2000
9614309717	96143097	2100
9614309718	96143097	2200
9614309719	96143097	2300
9614309720	96143097	2400
9614309721	96143097	2500

Propeller, Drawing (Drawing number 96143103):

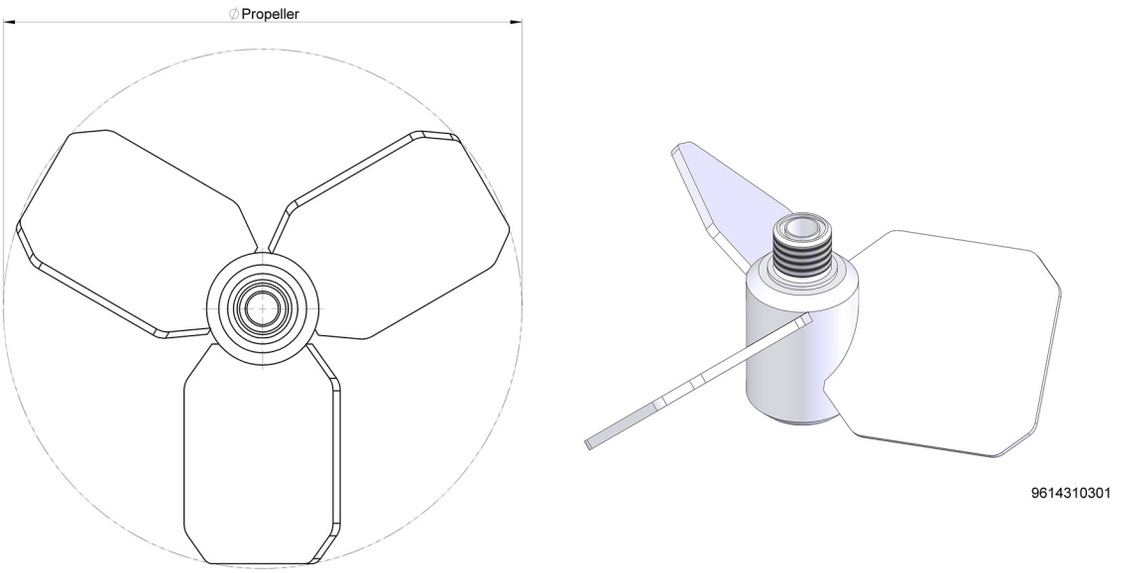

Propeller, Variants (Drawing number 96143103):

Item No.	Drawing No.	ØPropeller / [mm]
9614310301	96143103	296
9614310302	96143103	345
9614310303	96143103	394
9614310304	96143103	444
9614310305	96143103	493
9614310306	96143103	543
9614310307	96143103	593
9614310308	96143103	643
9614310309	96143103	692
9614310310	96143103	742
9614310311	96143103	792
9614310312	96143103	842
9614310313	96143103	892
9614310314	96143103	942
9614310315	96143103	992
9614310316	96143103	1042

Bottom Console for Agitator, Drawing (Drawing number 96143106):

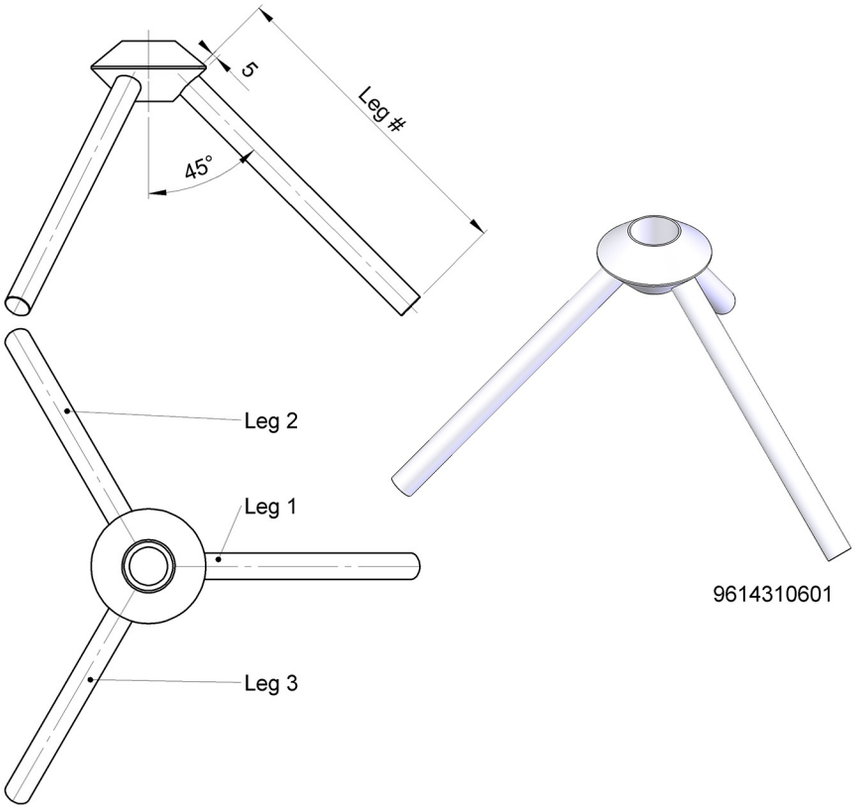

Bottom Console for Agitator, Variants (Drawing number 96143106):

Item No.	Drawing No.	Leg 1 (mm)	Leg 2 (mm)	Leg 3 (mm)	Item No.	Drawing No.	Leg 1 (mm)	Leg 2 (mm)	Leg 3 (mm)
9614310601	96143106	200	200	200	9614310642	96143106	700	700	600
9614310602	96143106	300	300	200	9614310643	96143106	800	800	600
9614310603	96143106	400	400	200	9614310644	96143106	900	900	600
9614310604	96143106	500	500	200	9614310645	96143106	1000	1000	600
9614310605	96143106	600	600	200	9614310646	96143106	200	200	700
9614310606	96143106	700	700	200	9614310647	96143106	300	300	700
9614310607	96143106	800	800	200	9614310648	96143106	400	400	700
9614310608	96143106	900	900	200	9614310649	96143106	500	500	700
9614310609	96143106	1000	1000	200	9614310650	96143106	600	600	700
9614310610	96143106	200	200	300	9614310651	96143106	700	700	700
9614310611	96143106	300	300	300	9614310652	96143106	800	800	700
9614310612	96143106	400	400	300	9614310653	96143106	900	900	700
9614310613	96143106	500	500	300	9614310654	96143106	1000	1000	700
9614310614	96143106	600	600	300	9614310655	96143106	200	200	800
9614310615	96143106	700	700	300	9614310656	96143106	300	300	800
9614310616	96143106	800	800	300	9614310657	96143106	400	400	800
9614310617	96143106	900	900	300	9614310658	96143106	500	500	800
9614310618	96143106	1000	1000	300	9614310659	96143106	600	600	800
9614310619	96143106	200	200	400	9614310660	96143106	700	700	800
9614310620	96143106	300	300	400	9614310661	96143106	800	800	800
9614310621	96143106	400	400	400	9614310662	96143106	900	900	800
9614310622	96143106	500	500	400	9614310663	96143106	1000	1000	800
9614310623	96143106	600	600	400	9614310664	96143106	200	200	900
9614310624	96143106	700	700	400	9614310665	96143106	300	300	900
9614310625	96143106	800	800	400	9614310666	96143106	400	400	900
9614310626	96143106	900	900	400	9614310667	96143106	500	500	900
9614310627	96143106	1000	1000	400	9614310668	96143106	600	600	900
9614310628	96143106	200	200	500	9614310669	96143106	700	700	900
9614310629	96143106	300	300	500	9614310670	96143106	800	800	900
9614310630	96143106	400	400	500	9614310671	96143106	900	900	900
9614310631	96143106	500	500	500	9614310672	96143106	1000	1000	900
9614310632	96143106	600	600	500	9614310673	96143106	200	200	1000
9614310633	96143106	700	700	500	9614310674	96143106	300	300	1000
9614310634	96143106	800	800	500	9614310675	96143106	400	400	1000
9614310635	96143106	900	900	500	9614310676	96143106	500	500	1000
9614310636	96143106	1000	1000	500	9614310677	96143106	600	600	1000
9614310637	96143106	200	200	600	9614310678	96143106	700	700	1000
9614310638	96143106	300	300	600	9614310679	96143106	800	800	1000
9614310639	96143106	400	400	600	9614310680	96143106	900	900	1000
9614310640	96143106	500	500	600	9614310681	96143106	1000	1000	1000
9614310641	96143106	600	600	600					

Agitator shaft, welded, Drawing (Drawing number 96143101):

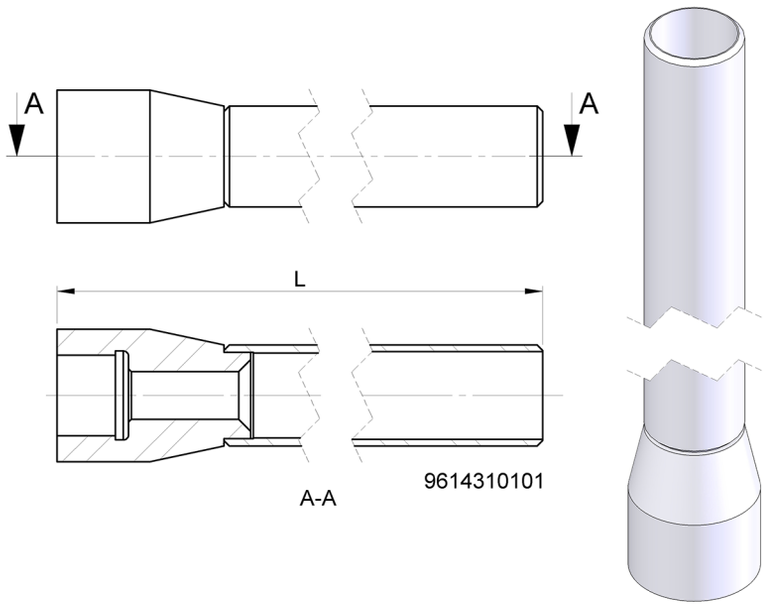

Agitator shaft, welded, Variants (Drawing number 96143101):

Item No.	Drawing No.	L / [mm]	Item No.	Drawing No.	L / [mm]
9614310101	96143101	500	9614310119	96143101	2300
9614310102	96143101	600	9614310120	96143101	2400
9614310103	96143101	700	9614310121	96143101	2500
9614310104	96143101	800	9614310122	96143101	2600
9614310105	96143101	900	9614310123	96143101	2700
9614310106	96143101	1000	9614310124	96143101	2800
9614310107	96143101	1100	9614310125	96143101	2900
9614310108	96143101	1200	9614310126	96143101	3000
9614310109	96143101	1300	9614310127	96143101	3100
9614310110	96143101	1400	9614310128	96143101	3200
9614310111	96143101	1500	9614310129	96143101	3300
9614310112	96143101	1600	9614310130	96143101	3400
9614310113	96143101	1700	9614310131	96143101	3500
9614310114	96143101	1800	9614310132	96143101	3600
9614310115	96143101	1900	9614310133	96143101	3700
9614310116	96143101	2000	9614310134	96143101	3800
9614310117	96143101	2100	9614310135	96143101	3900
9614310118	96143101	2200	9614310136	96143101	4000

Gear motor, Variants (Drawing number 96143133):

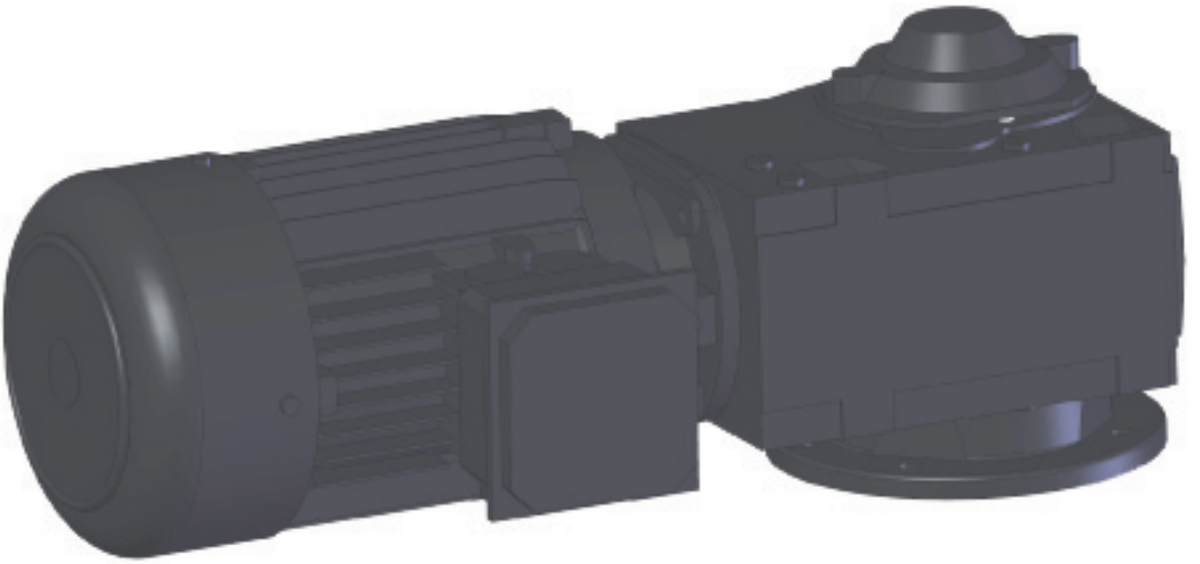

Gear motor specification:	
Type:	High efficient Helical Bevel
Shaft material:	1,4057
Motor temperature Protection:	PTC resistor, 3x155°C
Motor backstop:	Yes
Lubrication type*:	Food-compatible oil ISI VG 220
Lubrication supplier*:	Klüber
Lubrication classification*:	CLP PG H1 220
Lubrication quantity:	1,2 ltr
Surface color:	RAL 5010
Surface treatment:	Pain coat 3,0, 110-150 µm
Surface corrosion class:	EN 12944, C2
Labelling:	CE and CEL

**For more information and certificate see 8.4 of ALTB-SB-20 Instruction Manual.*
Please contact Alfa Laval if a new gear motor is required. In this way it is ensured that the new gear motor fulfils all local legislation.

Tube, CIP for spray ball, Drawing (Drawing number 96143085):

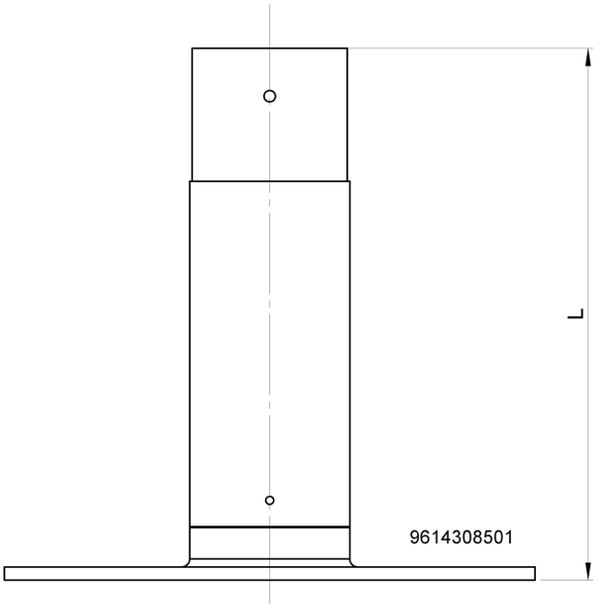

Tube, CIP for spray ball, Variants (Drawing number 96143085):

Item No.	Drawing No.	L / [mm]
9614308501	96143085	200
9614308502	96143085	300
9614308503	96143085	400
9614308504	96143085	500

Mounting Tool, Drawing (Drawing number 96143115):

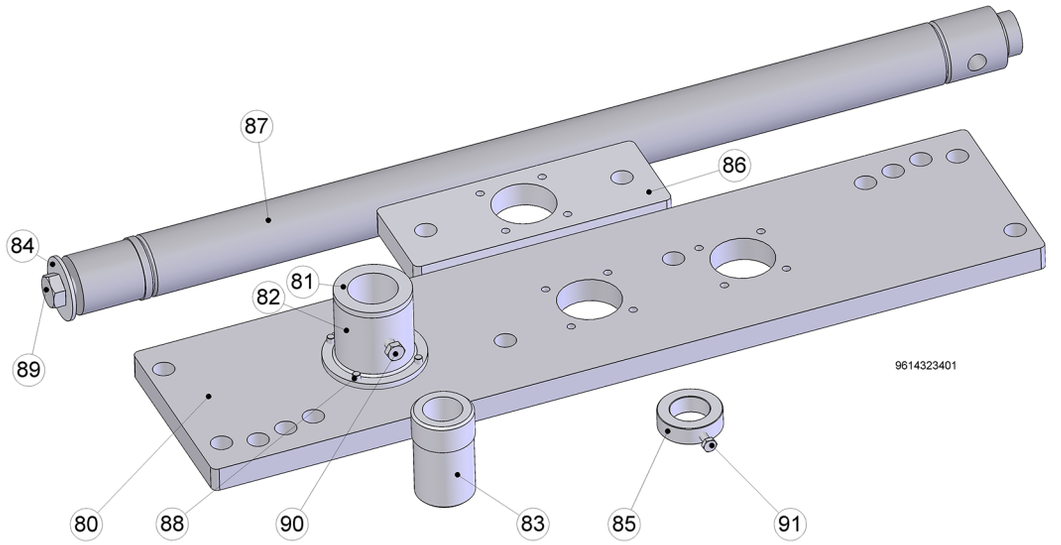

The mounting tool must be used for correct installation of ALTB-SB-20 (the same tool can also be used for ALTB-SB-30).
The tool is able to be used on top flanges / welding flanges with M16 screws (the holes are Ø17mm) positioned with the following bolt circles:

- 16 holes in: Ø500 mm, Ø550 mm, Ø600 mm
- 20 holes in: Ø600 mm, Ø650 mm, Ø660 mm

Pos	Qty	Denomination	Item no.	Drawing no.	Materials
Mounting Tool, Parts List (Item number 9614311501):					
80	1	Tool - Guide plate	9614312401	96143124	Aluminium 6061 Alloy
81	1	Tool - Top Guide type 20	9614312201	96143122	Aluminium 6061 Alloy
82	1	Tool - Top Guide type 30	9614312301	96143123	Aluminium 6061 Alloy
83	1	Tool - Bushing	9614311601	96143116	Aluminium 6061 Alloy
84	1	Washer	9614310201	96143102	A2
85	1	Tool - Back stop	9614311701	96143117	Aluminium 6061 Alloy
86	1	Tool - Guide plate, small	9614312501	96143125	Aluminium 6061 Alloy
87	1	Tool - Mounting shaft welded	9614313101	96143131	Aluminium 6061 Alloy
88	4	Screw	2601000641	None	A2
89	1	Screw	2601000563	None	A2
90	1	Screw	2601000389	None	A2
91	1	Screw	2601000564	None	A2

Drawing (item number 9614322101)

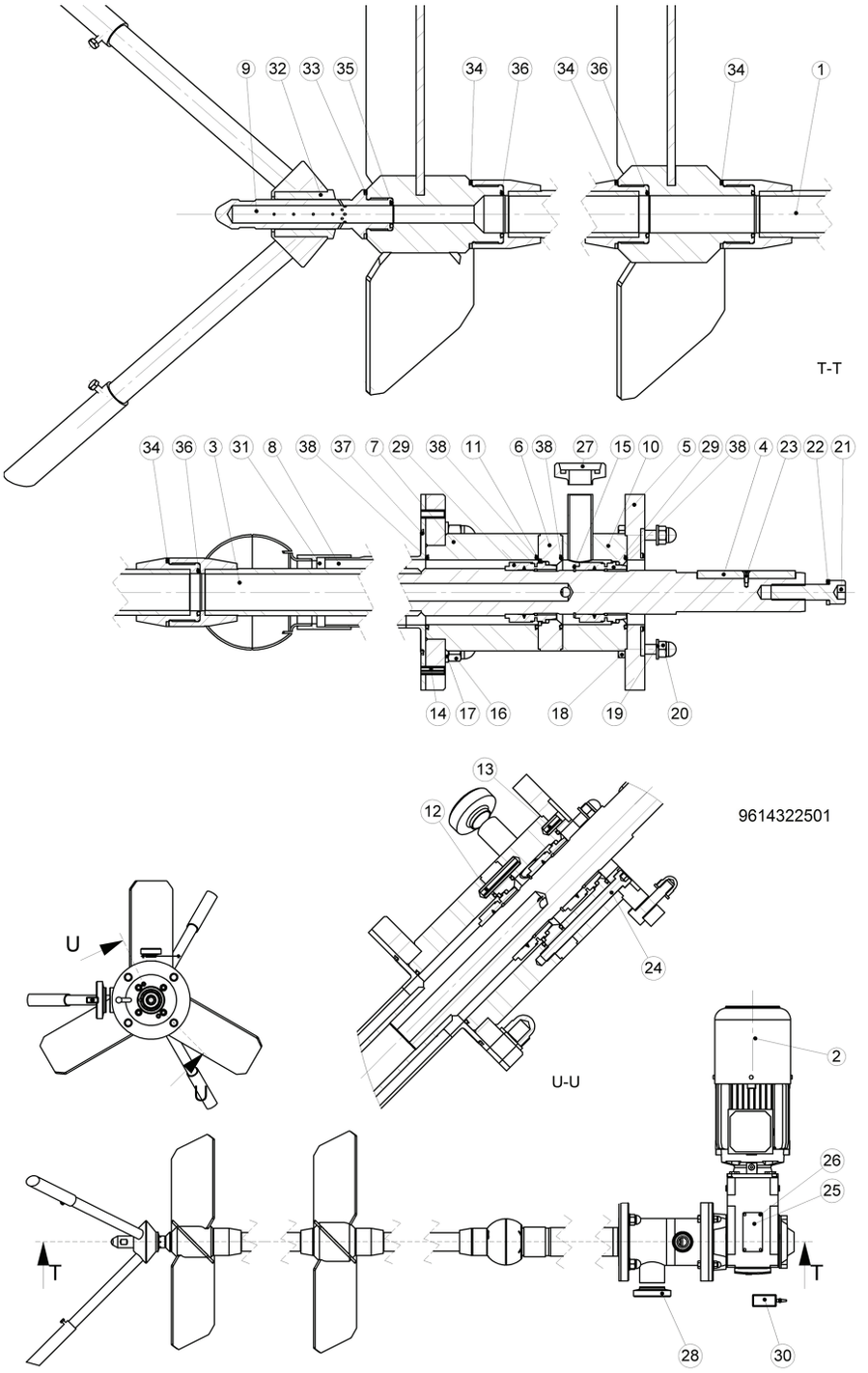

Pos		Qty	Denomination	Item no.	Drawing no.	Materials
Part list (item number 9614322101):						
1		1	Shaft, Propeller and Bottom console, assembly, type 30	See table on drawing*	96143242	See assembly
2		1	Gear motor for type 30	See table on drawing*	96143233	NA
3		1	Gear shaft type 30 with aeration and cleaning ball	9614321001	96143210	134404
4		1	Parallel key	9614313403	96143134	1.4307/1.4301
5		1	Flange, Upper for Agitator	9614318301	96143183	1,4404
6		1	Intermedia coupling welded	9614319701	96143197	1,4404
7		1	Console for Agitator, Welded	9614317901	96143179	1,4404
8		1	Tube, CIP for spray ball	9614318501	96143185	1,4404
9		1	Guide spindle for bearing	9614311101	96143111	1,4404
10		1	Gear console with aeration	9614319301	96143193	1,4404
11		1	Gasket support	9614319201	96143192	1,4404
12		2	Guide Pin	9614313504	96143135	A2
13		2	Guide Pin	9614313503	96143135	A2
14		2	Guide Pin	9614313501	96143135	A2
15		1	Circlip, outer	TE2601000199	None	A2
16		4	Cap nut	TE2601000058	None	A2
17		4	Washer	TE2601000348	None	A2
18		4	Screw	TE2601000630	None	A2
19		4	Washer	TE2601000346	None	A2
20		4	Cap nut	TE2601000355	None	A2
21		1	Screw	TE2601000047	None	A2
22		1	Washer	TE2601000169	None	A4
23		1	Screw	9614171065	None	A2
24		4	Screw	TE2601000631	None	A2
25		1	Name plate	TE2601041560	None	AISI 304L
26		4	Rivet	TE2601000202	None	A2
27		1	NW25	3131800071	None	1,4404
28		1	NW65	3131800111	None	1,4404
29	❑	2	Single Mechanical seal	9614321601	96143216	EN 12756: Y1/Q1/E/G/G
30	❑	1	Loctite® 2701, 10 ml	9614314101	96143141	NA
31	❑	1	Spray ball bearing	9614318901	96143189	PVDF
32	❑	1	Bearing for bottom console	9614311001	96143110	PTFE
33	❑	1	Gasket	9614311802	96143118	PTFE
34	❑	4	Gasket	9614311803	96143118	PTFE
35	❑	1	O-ring	9614312701	96143127	EPDM
36	❑	4	O-ring	9614312702	96143127	EPDM
37	❑	1	O-ring	9614312704	96143127	EPDM
38	❑	4	O-ring	9614312703	96143127	EPDM

* Not part of top level item number - item number must be selected on drawing

Item numbers marked ❑ are included in the Spare part kit

		Item no.
❑	**Spare part kit**	**9614322102**

Drawing (item number 9614322201)

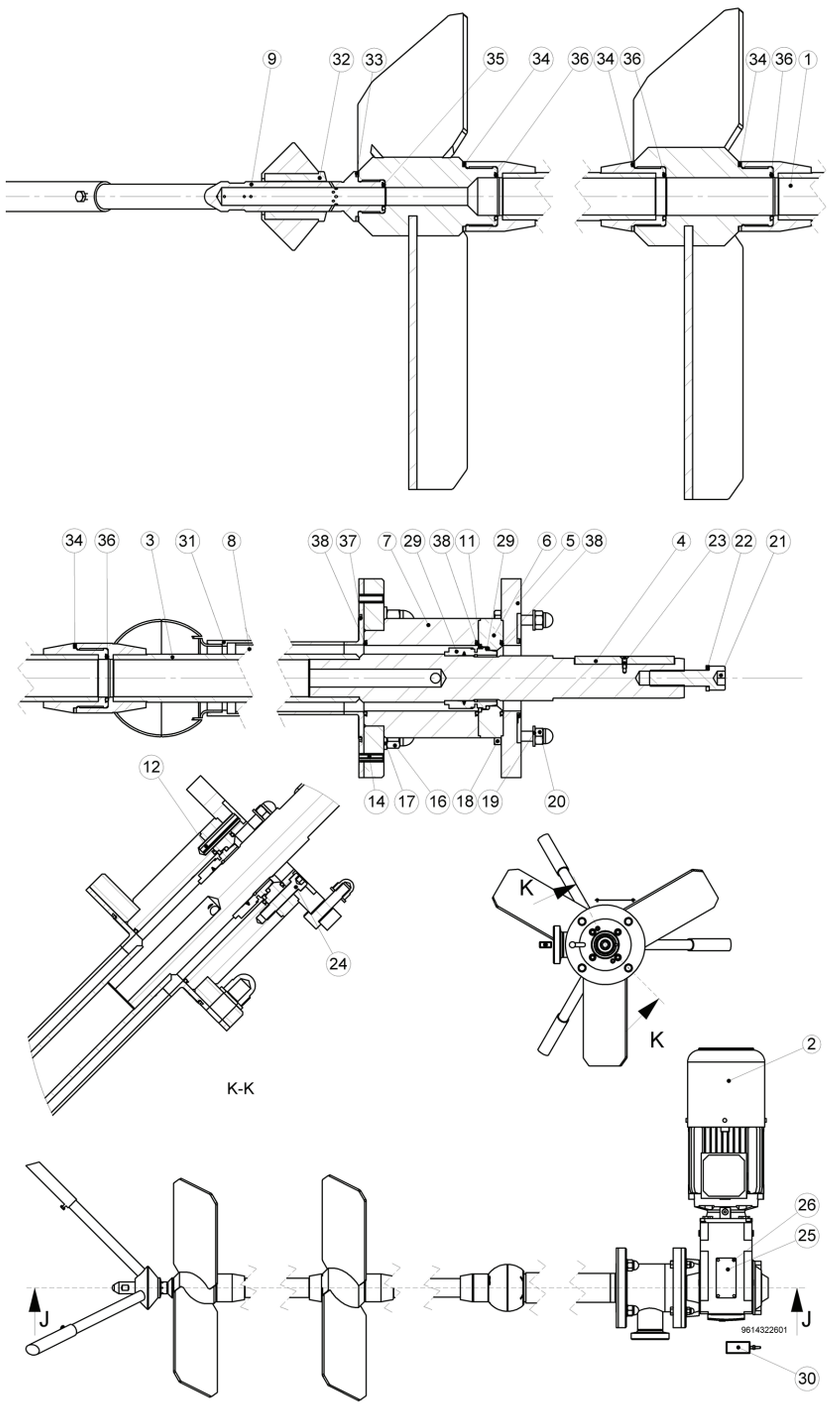

Pos		Qty	Denomination	Item no.	Drawing no.	Materials
Part list (item number 9614322201):						
1		1	Shaft, Propeller and Bottom console, assembly, type 30	See table on drawing*	96143242	See assembly
2		1	Gear motor for type 30	See table on drawing*	96143233	NA
3		1	Gear shaft type 30 without aeration and cleaning ball	9614321401	96143214	14.404
4		1	Parallel key	9614313403	96143134	1.4307/1.4301
5		1	Flange, Upper for Agitator	9614318301	96143183	1,4404
6		1	Intermedia coupling welded	9614319701	96143197	1,4404
7		1	Console for Agitator, Welded	9614317801	96143178	1,4404
8		1	Tube, CIP for spray ball	9614318501	96143185	1,4404
9		1	Guide spindle for bearing	9614311101	96143111	1,4404
11		1	Gasket support	9614319201	96143192	1,4404
12		2	Guide Pin	9614313504	96143135	A2
14		2	Guide Pin	9614313501	96143135	A2
16		4	Cap nut	TE2601000058	None	A2
17		4	Washer	TE2601000348	None	A2
18		4	Screw	TE2601000630	None	A2
19		4	Washer	TE2601000346	None	A2
20		4	Cap nut	TE2601000355	None	A2
21		1	Screw	TE2601000047	None	A2
22		1	Washer	TE2601000169	None	A4
23		1	Screw	9614171065	None	A2
24		4	Screw	9611990352	None	A2
25		1	Name plate	TE2601041560	None	AISI 304L
26		4	Rivet	TE2601000202	None	A2
29	❑	1	Single Mechanical seal	9614321601	96143216	EN 12756: Y1/Q1/E/G/G
30	❑	1	Loctite® 2701, 10 ml	9614314101	96143141	NA
31	❑	1	Spray ball bearing	9614318901	96143189	PVDF
32	❑	1	Bearing for bottom console	9614311001	96143110	PTFE AF 1022 / Acoflour 809
33	❑	1	Gasket	9614311802	96143118	PTFE
34	❑	4	Gasket	9614311803	96143118	PTFE
35	❑	1	O-ring	9614312701	96143127	EPDM
36	❑	4	O-ring	9614312702	96143127	EPDM
37	❑	1	O-ring	9614312704	96143127	EPDM
38	❑	3	O-ring	9614312703	96143127	EPDM

* Not part of top level item number - item number must be selected on drawing
Item numbers marked ❑ are included in the Spare part kit

		Item no.
❑	**Spare part kit**	**9614322202**

Shaft, Propeller and Bottom console assembly, Drawing (Item number 9614324201):

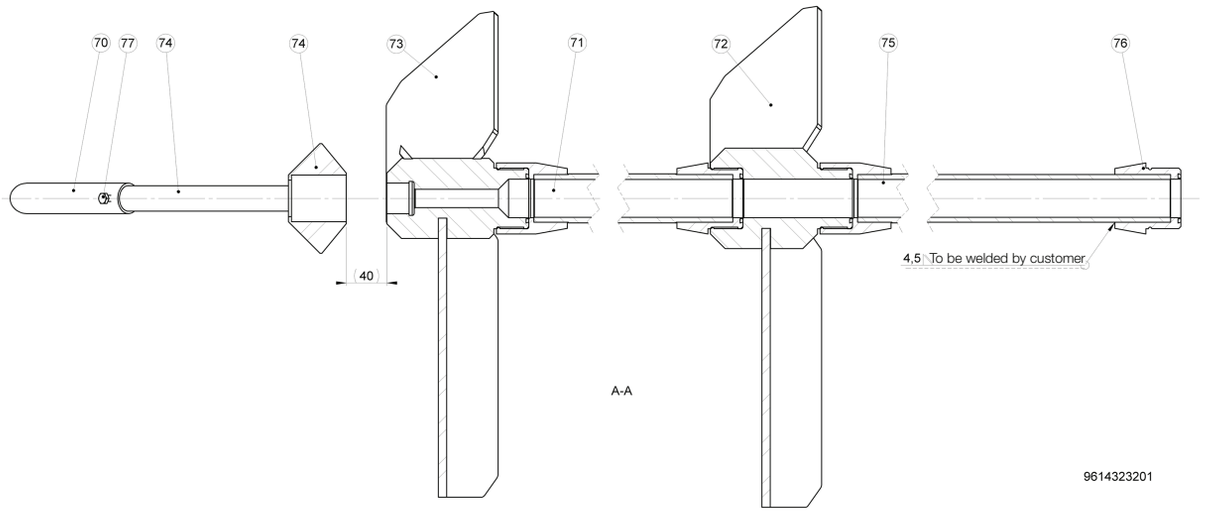

Pos	Qty	Denomination	Item no.	Drawing no.	Material
Shaft, Propeller and Bottom console assembly, Part List (Item number 9614324201):					
Pos.	Qty.	Denomination	Item No.	Drawing No.	Material
70	3	Adjustable leg for bottom console	See table on drawing*	96143109	1,4404
71	1	Agitator shaft, Welded	See table on drawing*	96143204	See assembly
72	1	Propeller for agitator, Type 30, Upper	See table on drawing*	96143199	See assembly
73	1	Propeller for agitator, Type 30, Bottom	See table on drawing*	96143202	See assembly
74	1	Bottom console for agitator, Type 20 + 30	See table on drawing*	96143106	See assembly
75	1	Agitator shaft, Welded	See table on drawing*	96143208	See assembly
76	1	Shaft male connection	9614320601	96143206	1,4404
77	3	Screw	TE2601000098	None	A2

* Not part of top level item number - item number must be selected on drawing

Adjustable leg for bottom console, Drawing (Drawing number 9614324109):

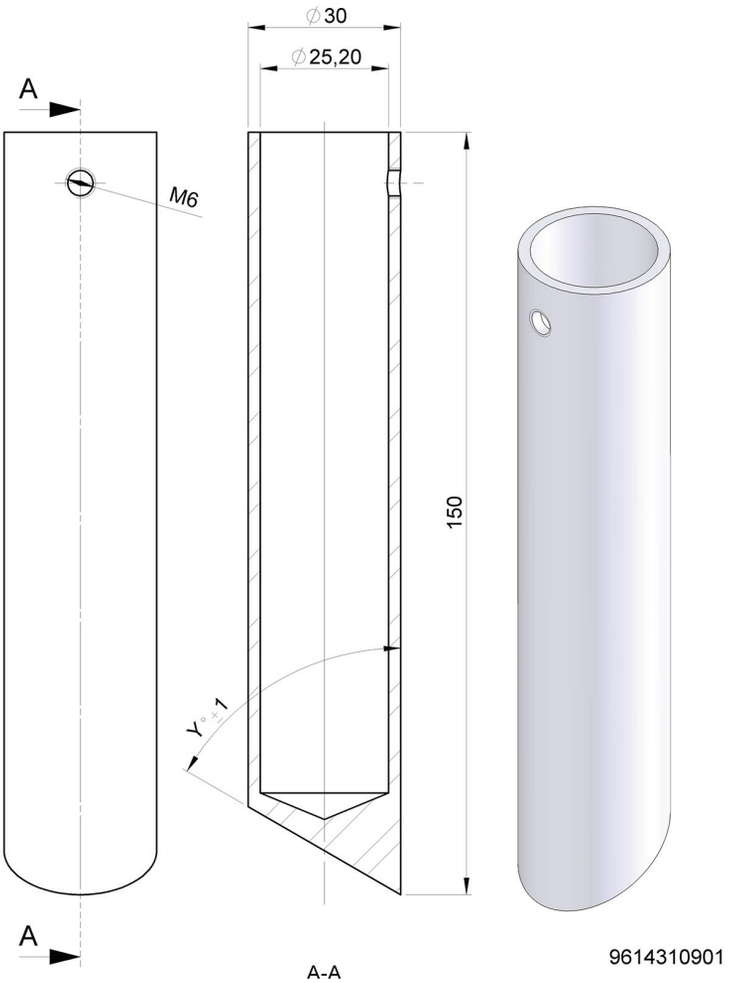

Adjustable leg for bottom console, Variants (Drawing number 9614324109):

Item No.	Drawing No.	Y / [°]
9614310901	96143109	90,0
9614310902	96143109	87,5
9614310903	96143109	85,0
9614310904	96143109	82,5
9614310905	96143109	80,0
9614310906	96143109	77,5
9614310907	96143109	75,0
9614310908	96143109	72,5
9614310909	96143109	70,0
9614310910	96143109	67,5
9614310911	96143109	65,0
9614310912	96143109	62,5
9614310913	96143109	60,0

Agitator shaft, welded, Drawing (Drawing number 96143204):

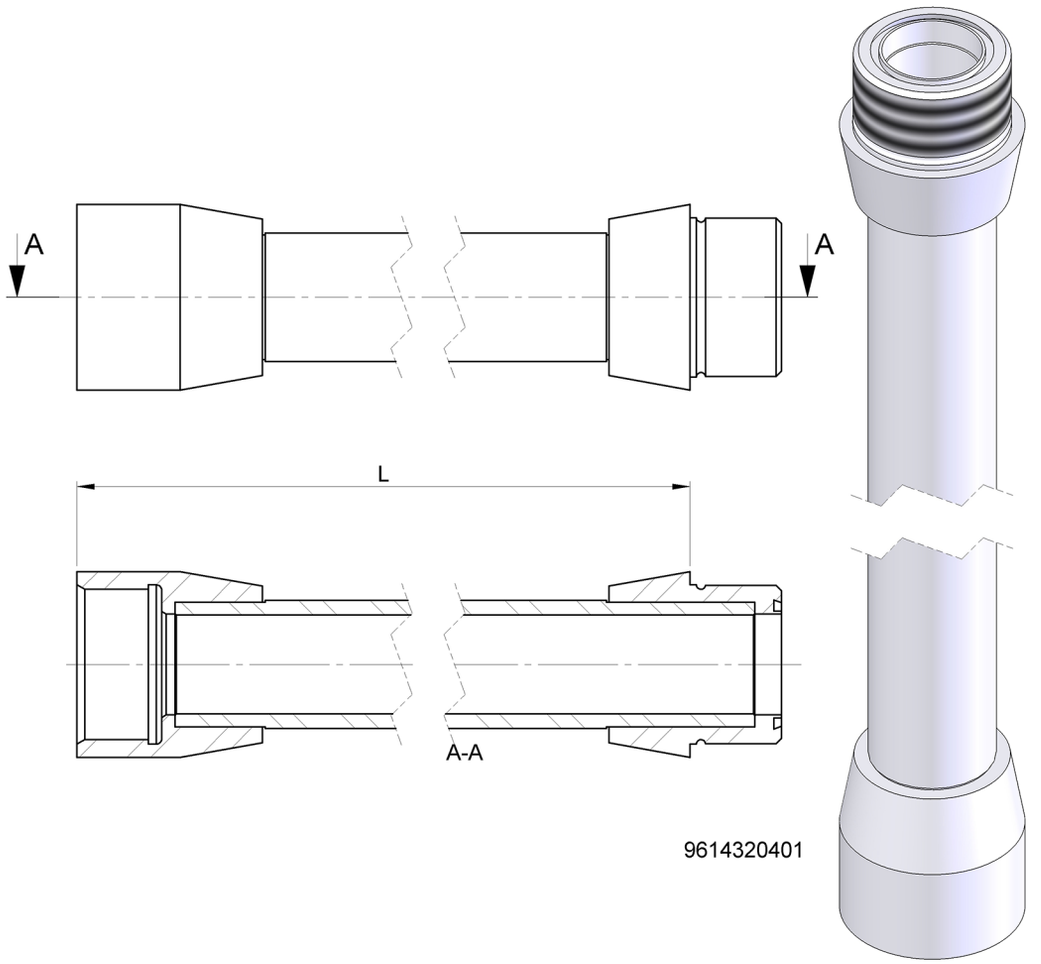

Agitator shaft, welded, Variants (Drawing number 96143204):

Item No.	Drawing No.	L / [mm]
9614320401	96143204	800
9614320402	96143204	900
9614320403	96143204	1000
9614320404	96143204	1100
9614320405	96143204	1200
9614320406	96143204	1300
9614320407	96143204	1400
9614320408	96143204	1500
9614320409	96143204	1600
9614320410	96143204	1700
9614320411	96143204	1800
9614320412	96143204	1900
9614320413	96143204	2000
9614320414	96143204	2100
9614320415	96143204	2200
9614320416	96143204	2300
9614320417	96143204	2400
9614320418	96143204	2500
9614320419	96143204	2600

Propeller, Upper, Drawing (Drawing number 96143199):

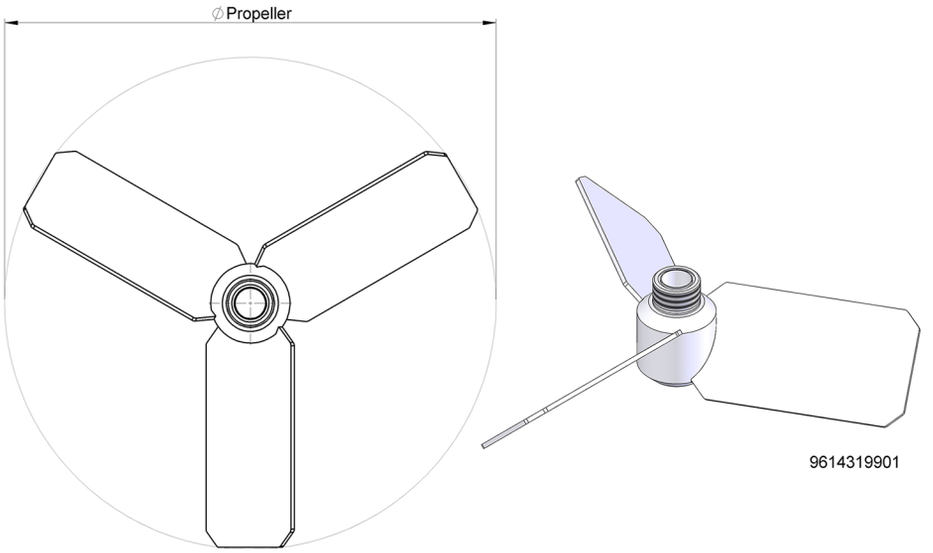

Propeller, Upper, Variants (Drawing number 96143199):

Item No.	Drawing No.	ØPropeller / [mm]
9614319901	96143199	614
9614319902	96143199	664
9614319903	96143199	713
9614319904	96143199	763
9614319905	96143199	813
9614319906	96143199	863
9614319907	96143199	912
9614319908	96143199	962
9614319909	96143199	1012
9614319910	96143199	1062
9614319911	96143199	1112

Propeller, Bottom, Drawing (Drawing number 96143202):

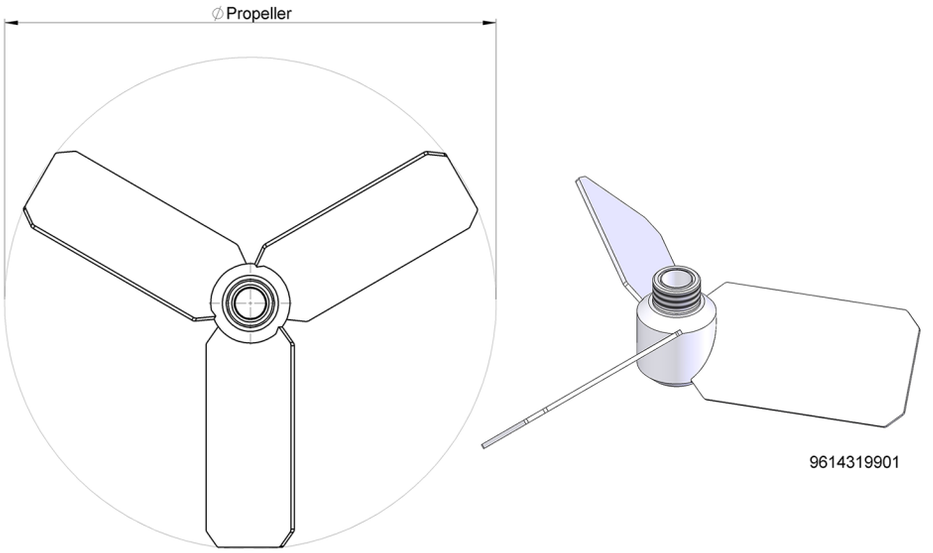

Propeller, Bottom, Variants (Drawing number 96143202):

Item No.	Drawing No.	ØPropeller / [mm]
9614320201	96143202	594
9614320202	96143202	644
9614320203	96143202	693
9614320204	96143202	743
9614320205	96143202	793
9614320206	96143202	843
9614320207	96143202	892
9614320208	96143202	942
9614320209	96143202	992
9614320210	96143202	1042
9614320211	96143202	1092

Bottom Console for Agitator, Drawing (Drawing number 96143106):

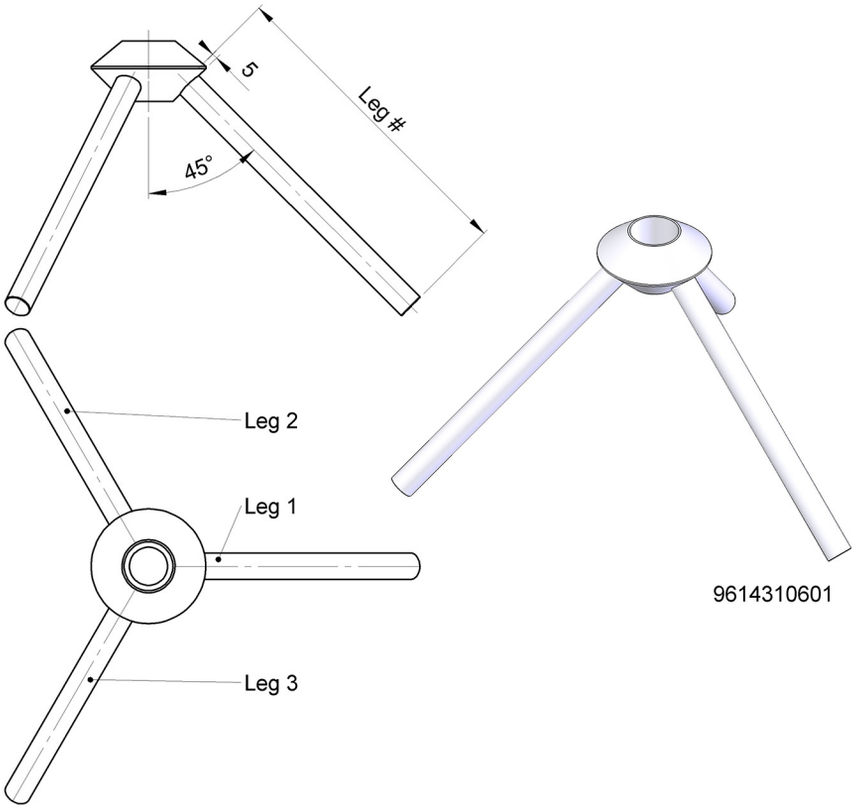

Bottom Console for Agitator, Variants (Drawing number 96143106):

Item No.	Drawing No.	Leg 1 (mm)	Leg 2 (mm)	Leg 3 (mm)	Item No.	Drawing No.	Leg 1 (mm)	Leg 2 (mm)	Leg 3 (mm)
9614310601	96143106	200	200	200	9614310642	96143106	700	700	600
9614310602	96143106	300	300	200	9614310643	96143106	800	800	600
9614310603	96143106	400	400	200	9614310644	96143106	900	900	600
9614310604	96143106	500	500	200	9614310645	96143106	1000	1000	600
9614310605	96143106	600	600	200	9614310646	96143106	200	200	700
9614310606	96143106	700	700	200	9614310647	96143106	300	300	700
9614310607	96143106	800	800	200	9614310648	96143106	400	400	700
9614310608	96143106	900	900	200	9614310649	96143106	500	500	700
9614310609	96143106	1000	1000	200	9614310650	96143106	600	600	700
9614310610	96143106	200	200	300	9614310651	96143106	700	700	700
9614310611	96143106	300	300	300	9614310652	96143106	800	800	700
9614310612	96143106	400	400	300	9614310653	96143106	900	900	700
9614310613	96143106	500	500	300	9614310654	96143106	1000	1000	700
9614310614	96143106	600	600	300	9614310655	96143106	200	200	800
9614310615	96143106	700	700	300	9614310656	96143106	300	300	800
9614310616	96143106	800	800	300	9614310657	96143106	400	400	800
9614310617	96143106	900	900	300	9614310658	96143106	500	500	800
9614310618	96143106	1000	1000	300	9614310659	96143106	600	600	800
9614310619	96143106	200	200	400	9614310660	96143106	700	700	800
9614310620	96143106	300	300	400	9614310661	96143106	800	800	800
9614310621	96143106	400	400	400	9614310662	96143106	900	900	800
9614310622	96143106	500	500	400	9614310663	96143106	1000	1000	800
9614310623	96143106	600	600	400	9614310664	96143106	200	200	900
9614310624	96143106	700	700	400	9614310665	96143106	300	300	900
9614310625	96143106	800	800	400	9614310666	96143106	400	400	900
9614310626	96143106	900	900	400	9614310667	96143106	500	500	900
9614310627	96143106	1000	1000	400	9614310668	96143106	600	600	900
9614310628	96143106	200	200	500	9614310669	96143106	700	700	900
9614310629	96143106	300	300	500	9614310670	96143106	800	800	900
9614310630	96143106	400	400	500	9614310671	96143106	900	900	900
9614310631	96143106	500	500	500	9614310672	96143106	1000	1000	900
9614310632	96143106	600	600	500	9614310673	96143106	200	200	1000
9614310633	96143106	700	700	500	9614310674	96143106	300	300	1000
9614310634	96143106	800	800	500	9614310675	96143106	400	400	1000
9614310635	96143106	900	900	500	9614310676	96143106	500	500	1000
9614310636	96143106	1000	1000	500	9614310677	96143106	600	600	1000
9614310637	96143106	200	200	600	9614310678	96143106	700	700	1000
9614310638	96143106	300	300	600	9614310679	96143106	800	800	1000
9614310639	96143106	400	400	600	9614310680	96143106	900	900	1000
9614310640	96143106	500	500	600	9614310681	96143106	1000	1000	1000
9614310641	96143106	600	600	600					

Agitator shaft, welded, Drawing (Drawing number 96143208):

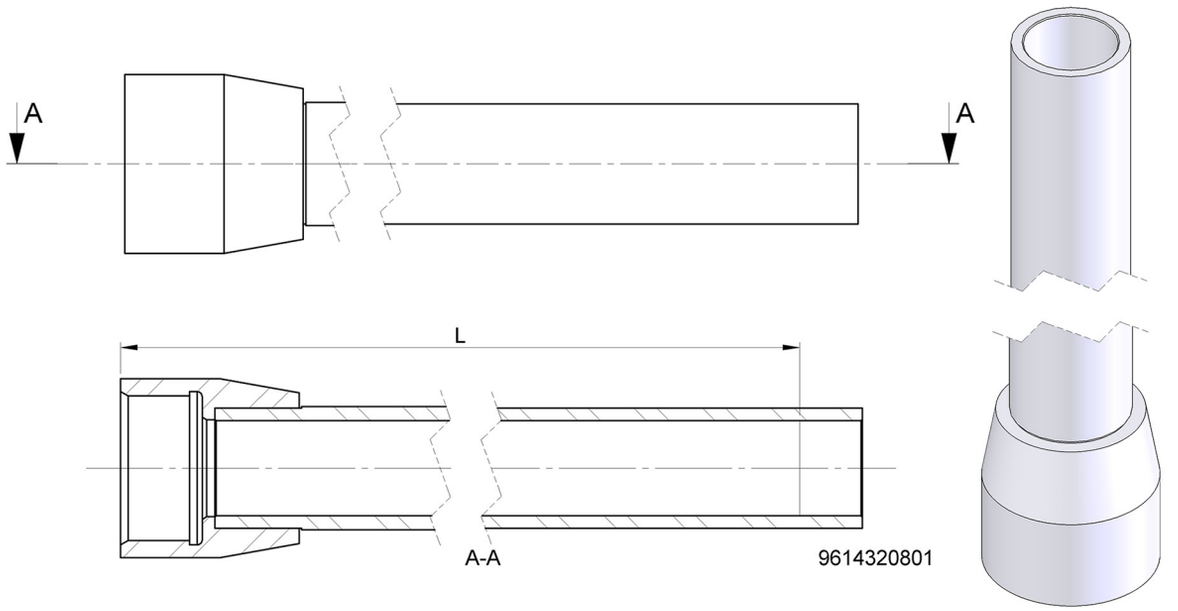

Agitator shaft, welded, Variants (Drawing number 96143208):

Item No.	Drawing No.	L / [mm]
9614320801	96143208	1200
9614320802	96143208	1400
9614320803	96143208	1600
9614320804	96143208	1800
9614320805	96143208	2000
9614320806	96143208	2200
9614320807	96143208	2400
9614320808	96143208	2600
9614320809	96143208	2800
9614320810	96143208	3000
9614320811	96143208	3200
9614320812	96143208	3400
9614320813	96143208	3600

Gear motor, Variants (Drawing number 96143233):

Gear motor specification:	
Type:	High efficient Helical Bevel
Shaft material:	1,4057
Motor temperature Protection:	PTC resistor, 3x155°C
Motor backstop:	Yes
Lubrication type*:	Food-compatible oil ISI VG 220
Lubrication supplier*:	Klüber
Lubrication classification*:	CLP PG H1 220
Lubrication quantity:	1,2 ltr
Surface color:	RAL 5010
Surface treatment:	Pain coat 3,0, 110-150 µm
Surface corrosion class:	EN 12944, C2
Labelling:	CE and CEL

**For more information and certificate see 8.5 of ALTB-SB-30 Instruction Manual.*
Please contact Alfa Laval if a new gear motor is required. In this way it is ensured that the new gear motor fulfils all local legislation.

Mounting Tool, Drawing (Drawing number 96143115):

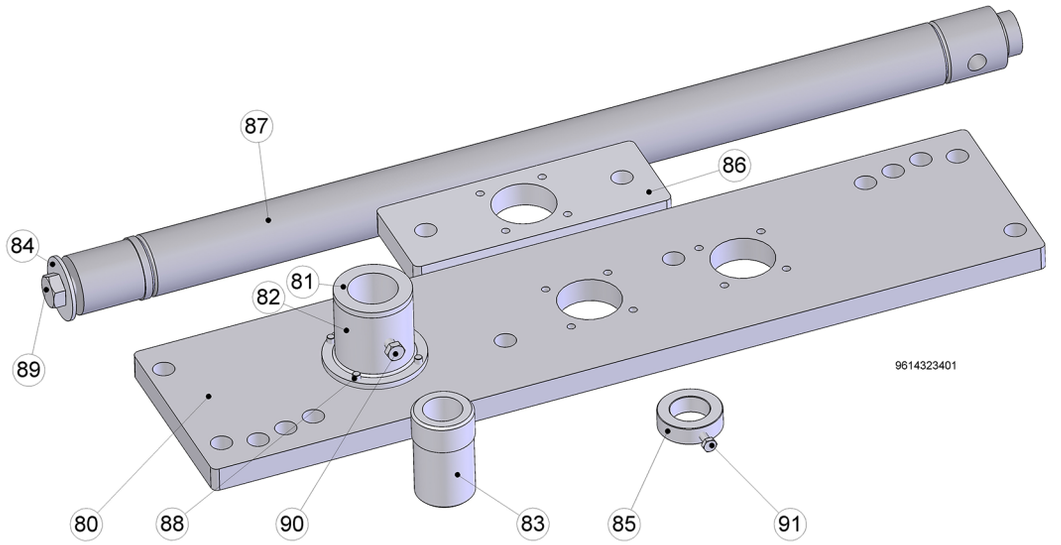

The mounting tool must be used for correct installation of ALTB-SB-20 (the same tool can also be used for ALTB-SB-30).
The tool is able to be used on top flanges / welding flanges with M16 screws (the holes are Ø17mm) positioned with the following bolt circles:

- 16 holes in: Ø500 mm, Ø550 mm, Ø600 mm
- 20 holes in: Ø600 mm, Ø650 mm, Ø660 mm

Pos	Qty	Denomination	Item no.	Drawing no.	Materials
Mounting Tool, Parts List (Item number 9614311501):					
80	1	Tool - Guide plate	9614312401	96143124	Aluminium 6061 Alloy
81	1	Tool - Top Guide type 20	9614312201	96143122	Aluminium 6061 Alloy
82	1	Tool - Top Guide type 30	9614312301	96143123	Aluminium 6061 Alloy
83	1	Tool - Bushing	9614311601	96143116	Aluminium 6061 Alloy
84	1	Washer	9614310201	96143102	A2
85	1	Tool - Back stop	9614311701	96143117	Aluminium 6061 Alloy
86	1	Tool - Guide plate, small	9614312501	96143125	Aluminium 6061 Alloy
87	1	Tool - Mounting shaft welded	9614313101	96143131	Aluminium 6061 Alloy
88	4	Screw	2601000641	None	A2
89	1	Screw	2601000563	None	A2
90	1	Screw	2601000389	None	A2
91	1	Screw	2601000564	None	A2

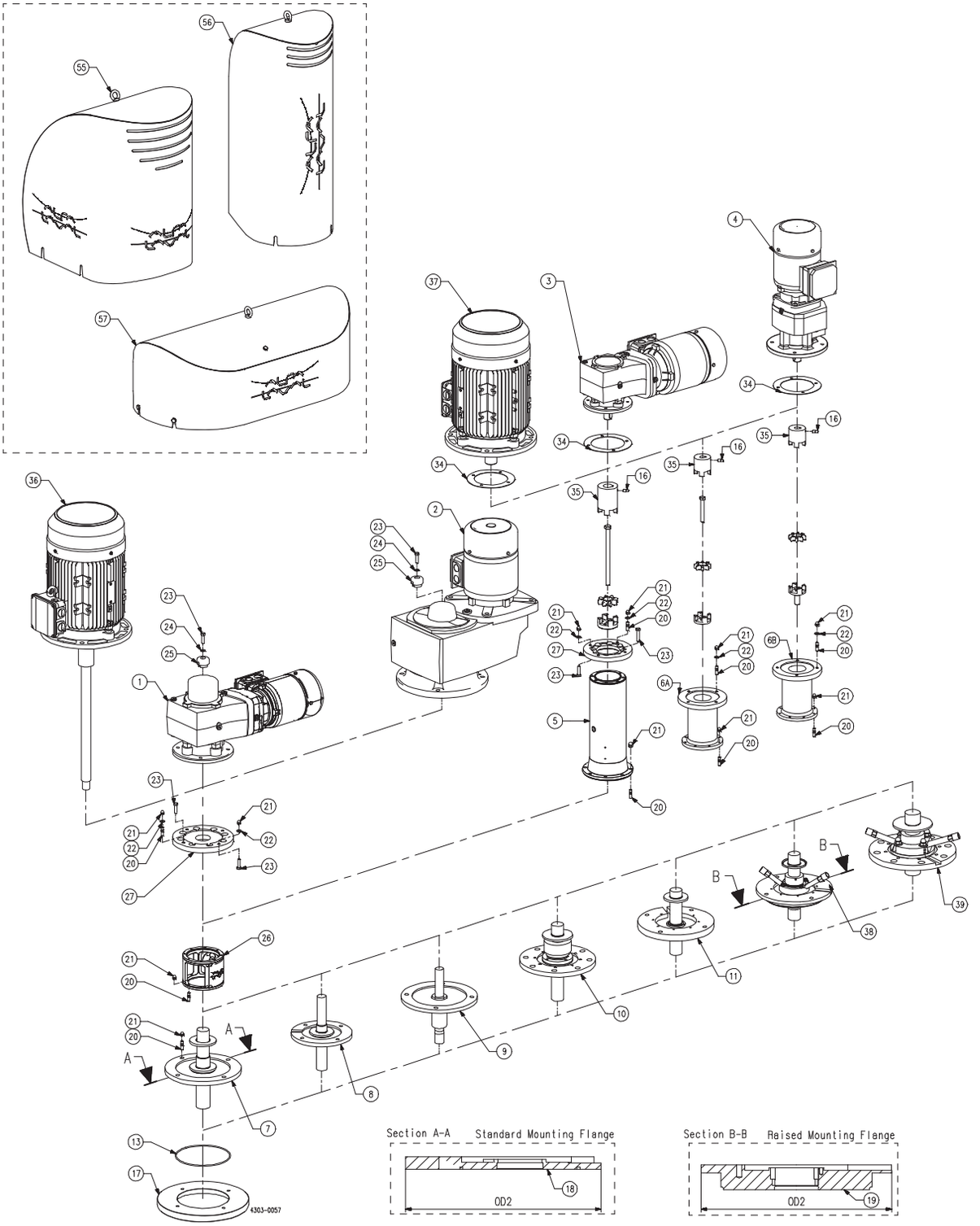
Section A-A Standard Mounting Flange
OD2
Section B-B Raised Mounting Flange
OD2
4303-0057

Pos		Qty	Denomination	Flange seal Thickness 3.53	Flange seal Thickness 5.33	Flange seal LKR agitator
1	□	1	GR gear motor, hollow shaft			
2	□	1	GP gear motor, hollow shaft			
3	□	1	GR gear motor, output shaft			
4	□	1	GC gear motor, output shaft			
5	◆	1	Bearing frame B20, B25, B25/30, B35, B35/40, B45, B45/50, B55, B55/60			
6	◆	1	Bearing frame, BC160/35, BC160D/30, BC160DH/30			
7	◆	1	Shaft seal type R			
8	◆	1	Shaft seal type G			
9	◆	1	Shaft seal type V			
10	◆	1	Shaft seal type S			
11	◆	1	Shaft seal type S3			
38	◆	1	Shaft seal type D			
39	◆	1	Shaft seal type DC			
13		1	O-ring, FEP (for flange OD2=134, std)	TE2601000078		
		1	O-ring, FEP (for flange OD2=134, raised)	TE2601000078		
		1	O-ring, FEP (for flange OD2=140, std)	TE2601000078		
		1	O-ring, FEP (for flange OD2=160, std)	TE2601000078		
		1	O-ring, FEP (for flange OD2=200, std)	TE2601000073		
		1	O-ring, FEP (for flange OD2=200, raised)	TE2601000073		
		1	O-ring, FEP (for flange OD2=220, std)	TE2601000073		
		1	O-ring, EPDM (for flange OD2=225, raised)			TE2601000146
		1	O-ring, FPM (for flange OD2=225, raised)			TE2601000679
		1	O-ring, FEP (for flange OD2=230, std)	TE2601000074		
		1	O-ring, FEP (for flange OD2=250, std)	TE2601000074		
		1	O-ring, FEP (for flange OD2=250, raised)	TE2601000396		
		1	O-ring, FEP (for flange OD2=285, std)	TE2601000074		
		1	O-ring, FEP (for flange OD2=285, std)	TE2601000550		
		1	O-ring, FEP (for flange OD2=300, std)	TE2601000075		
		1	O-ring, EPDM (for flange OD2=300, std)			TE2601000371
		1	O-ring, FPM (for flange OD2=300, std)			TE2601000412
		1	O-ring, FEP (for flange OD2=325, std)	TE2601000076		
		1	O-ring, FEP (for flange OD2=340, std)	TE2601000075		
		1	O-ring, FEP (for flange OD2=342,9, std)	TE2601000076		
		1	O-ring, FEP (for flange OD2=350, std)	TE2601000076		
		1	O-ring, FEP (for flange OD2=395, std)	TE2601000163		
		1	O-ring, FEP (for flange OD2=395, std)		9615483101	
		1	O-ring, FEP (for flange OD2=400, std)	TE2601000163		
		1	O-ring, FEP (for flange OD2=406,4, std)	TE2601000163		
		1	O-ring, FEP (for flange OD2=445, std)	TE2601000163		
		1	O-ring, FEP (for flange OD2=455, std)		9615483201	
		1	O-ring, FEP (for flange OD2=450, std)	TE2601000164		
		1	O-ring, FEP (for flange OD2=505, std)		9615483301	
		1	O-ring, FEP (for flange OD2=550, std)	TE2601000571		
16	□	X	Screw, pointed			
17	□	1	Welding flange			
18	□	1	Mounting flange, standard			
19	□	1	Mounting flange, raised			
20	□	X	Stud			
21	□	X	Cap nut			
22	□	X	Washer			
23	□	X	Screw			
24	□	1	Washer, Nord Lock			
25	□	1	Fixing element			
26	□	1	Lantern, complete,			
27	□	1	Drive unit flange			
34	□	1	Disc spacer			
35	□	1	Coupling			
36	□	1	Motor and shaft unit			
37	□	1	Motor			

□ Article number available upon request by serial number or article number of the Agitator.

◆ Article number is to be found in the next section matching the specific bearing frame and shaft seal type.

X Quantity may vary depending on Agitator type, will be informed upon request.

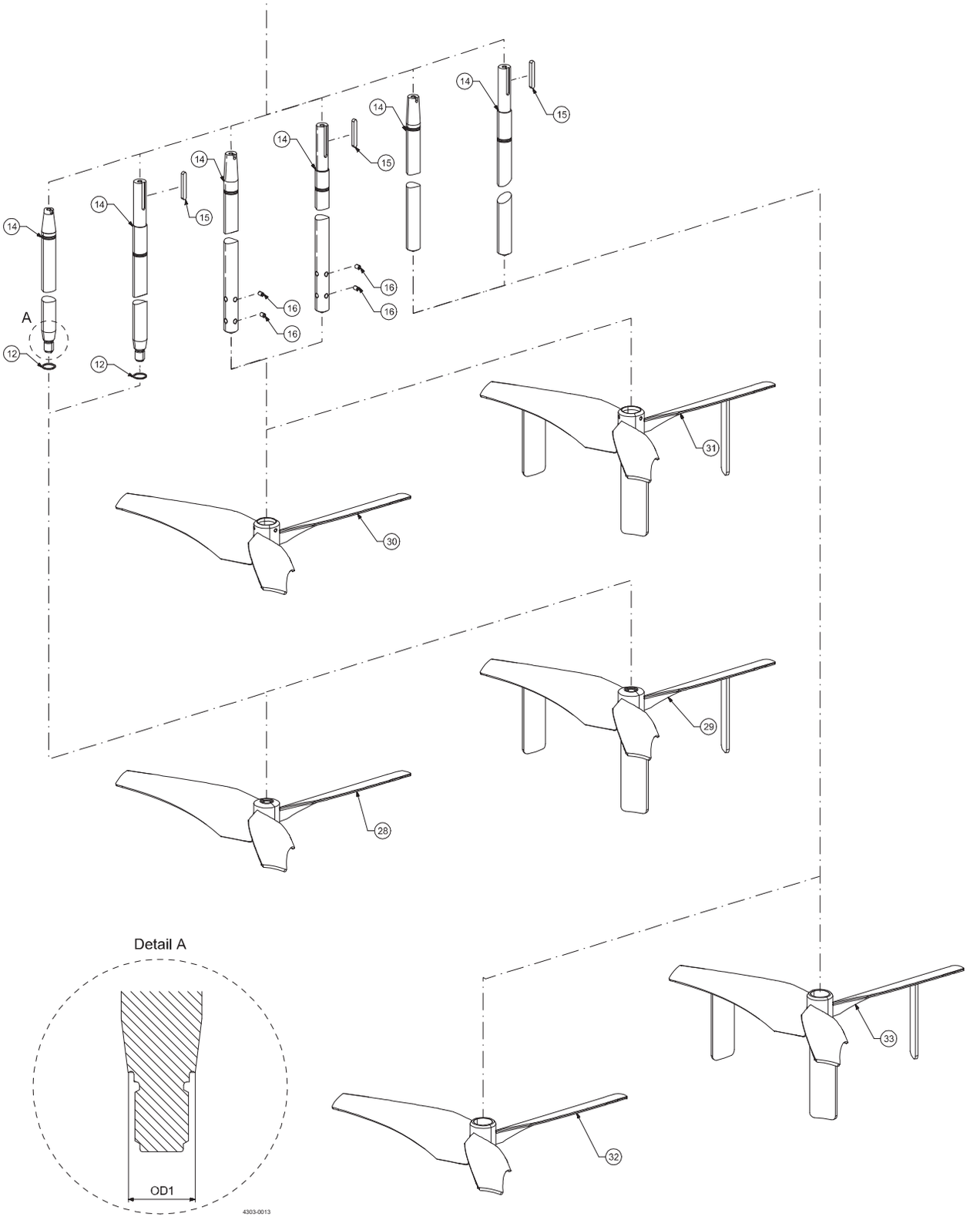
14
15
16
A
12
31
30
29
28
Detail A
OD1
33
32
4303-0013

Pos		Qty	Denomination	Impeller seal	Flange seal
12		1	O-ring, FEP, (for shaft size OD1=25)	TE2601000243	
		1	O-ring, FEP, (for shaft size OD1=30)	TE2601000244	
		1	O-ring, FEP, (for shaft size OD1=35)	TE2601000245	
		1	O-ring, FEP, (for shaft size OD1=40)	TE2601000246	
		1	O-ring, FEP, (for shaft size OD1=45)	TE2601000247	
		1	O-ring, FEP, (for shaft size OD1=50)	TE2601000248	
		1	O-ring, FEP, (for shaft size OD1=55)	TE2601000249	
		1	O-ring, FEP, (for shaft size OD1=60)	TE2601000250	
		1	O-ring, FEP, (for shaft size OD1=65)	TE2601000189	
		1	O-ring, FEP, (for shaft size OD1=70)	TE2601000609	
		1	O-ring, FEP, (for shaft size OD1=75)	TE2601000610	
		1	O-ring, FEP, (for shaft size OD1=80)	TE2601000611	
		1	O-ring, FEP, (for shaft size OD1=90)	TE2601000612	
14	❑	1	Shaft		
15	❑	1	Parrallel key		
16	❑	X	Screw, pointed		
28	❑	1	Impeller device, EnSaFoil, (ESF), w. thread		
	❑	1	Impeller device, EnSaFoil, (ESF), welding		
29	❑	1	Impeller device, EnSaFoil Low level, (ESFL), w. thread		
	❑	1	Impeller device, EnSaFoil Low level, (ESFL), welding		
30	❑	1	Impeller device, EnSaFoil, (ESF), w. screws		
31	❑	1	Impeller device, EnSaFoil Low level, (ESFL), w. screws		

❑ Article number available upon request by serial number or article number of the agitator.

◆ Article number is to be found in the next section matching the specific bearing frame and shaft seal type.

X Quantity may vary depending on Agitator type, will be informed upon request.

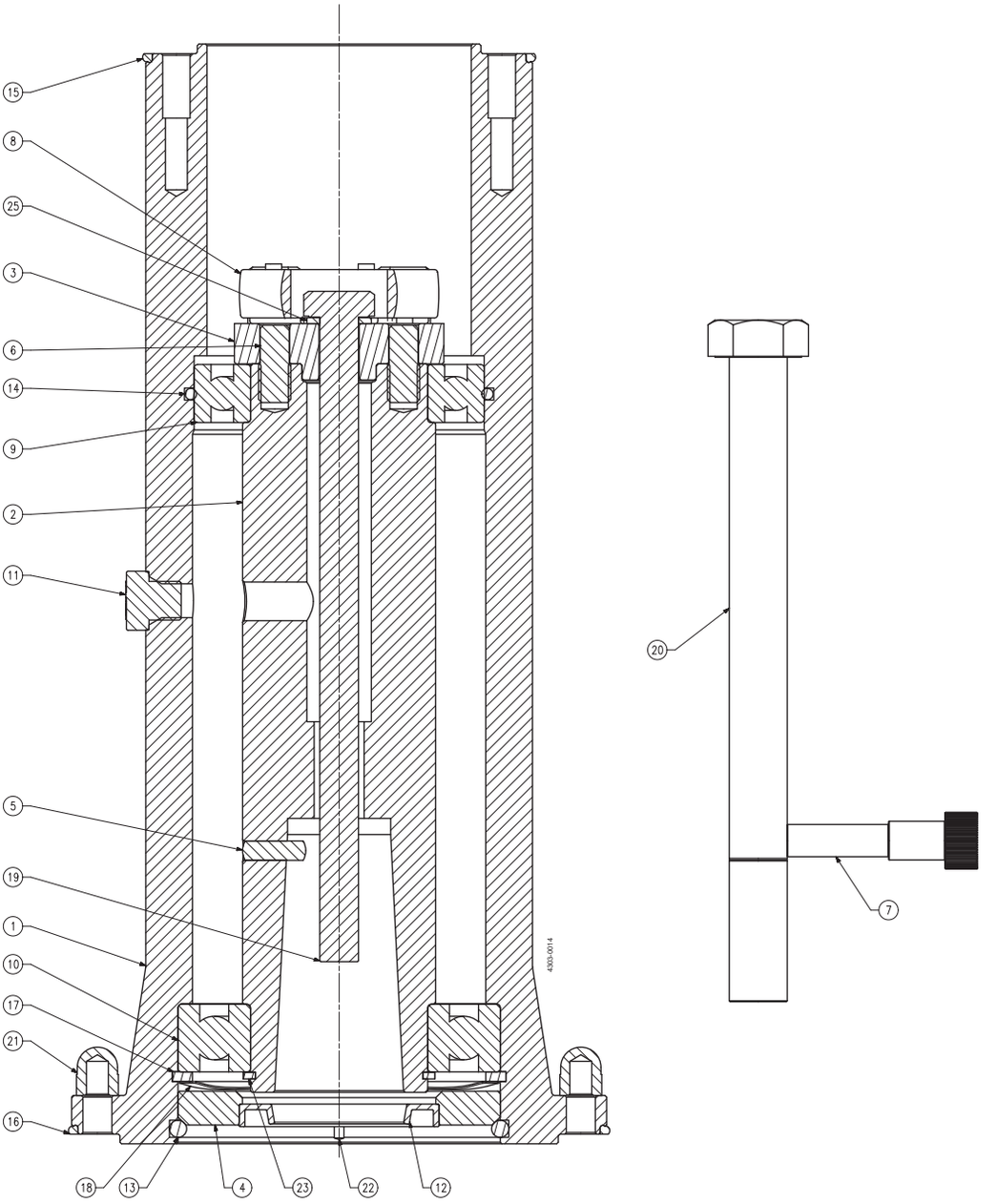
15
8
25
3
6
14
9
2
11
5
19
1
10
17
21
16
18
13
4
23
22
12
20
7
4303-0014

Pos		Qty	Denomination	B20	B25	B25/30	B35
1		1	Bearing frame - housing				
2		1	Drive shaft				
3		1	Coupling				
4		1	Cover				
5		1	Pin				
6		2	Pin				
7		1	Tool, retainer bolt	TE2604010700	TE2604010700	TE2604010700	TE2604010100
8	□	1	Spider, PUR	TE2601000351	TE2601000351	TE2601000351	TE2601000352
9	□	1	Bearing	TE2601000120	TE2601000120	TE2601000120	TE2601000121
10	□	1	Bearing	TE2601000122	TE2601000122	TE2601000122	TE2601000123
11	□	1	PreVent Valve	TE2601000362	TE2601000362	TE2601000362	TE2601000362
12	□	1	Seal, radial	TE2601000560	TE2601000592	TE2601000318	TE2601000227
13	□	1	O-ring, FPM	TE2601000301	TE2601000301	TE2601000301	TE2601000304
14	□	1	O-ring, FPM	TE2601000300	TE2601000300	TE2601000300	TE2601000302
15	□	1	O-ring, FPM	TE2601000303	TE2601000303	TE2601000303	TE2601000269
16	□	1	O-ring, FPM	TE2601000269	TE2601000269	TE2601000269	TE2601000277
17		1	Circlip, inner				
18		1	Spring, wave				
19		1	Screw				
20		1	Extractor bolt	TE2601000331	TE2601000331	TE2601000331	TE2601000336
21		8	Cap nut				
22		2	Pin				
23		1	Circlip, outer				
25		1	Washer				

		B20	B25	B25/30	B35
Assembly Kit					
□	**Assembly Kit, Bearing frame B20, B25, B25/30, B35**	TE261301266B	TE261301267B	TE2613066880	TE261301269C

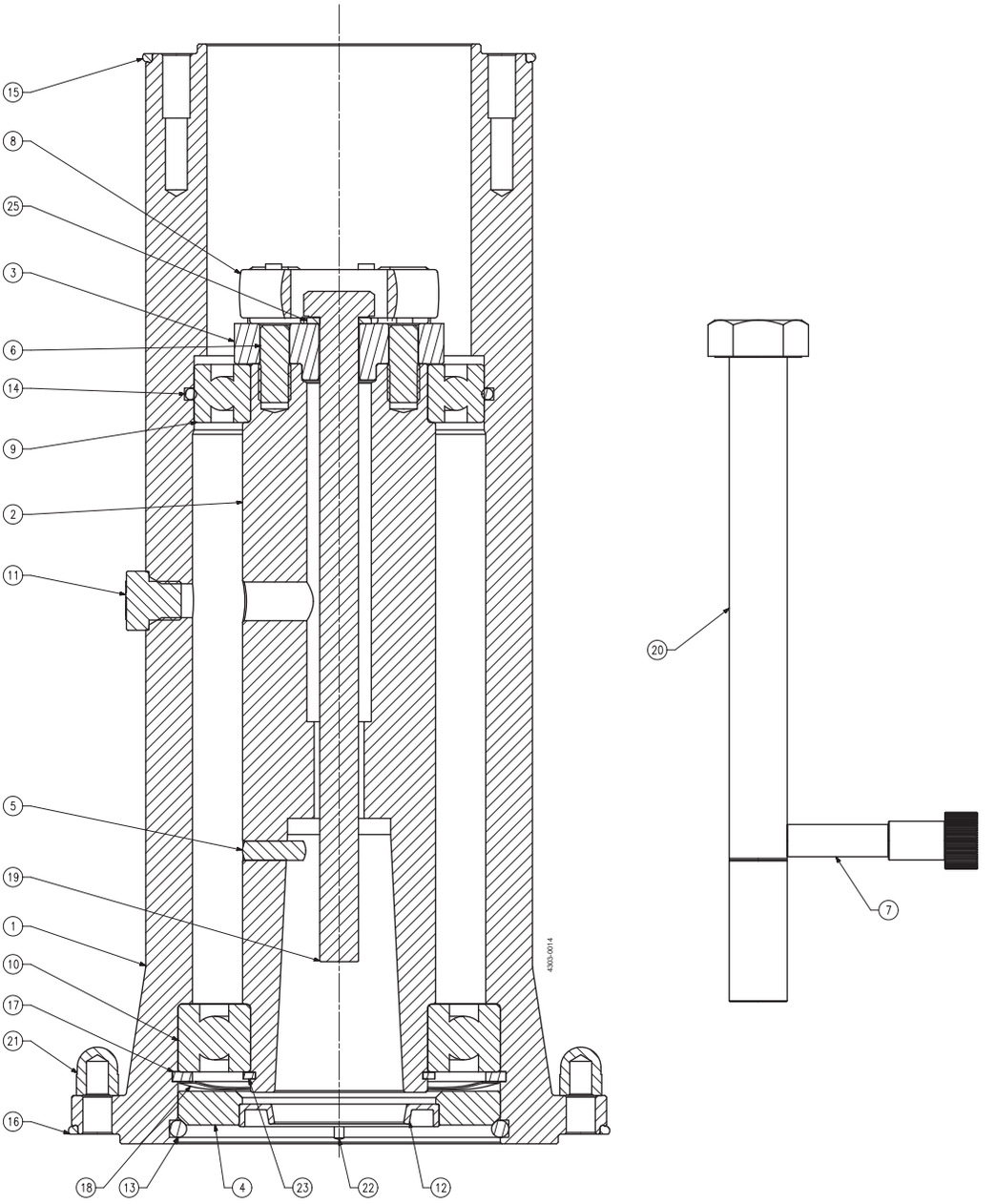
15
8
25
3
6
14
9
2
11
5
19
1
10
17
21
16
18
13
4
23
22
12
20
7
4303-0014

Pos		Qty	Denomination	B35/40	B45	B45/50	B55	B55/60
1		1	Bearing frame - housing					
2		1	Drive shaft					
3		1	Coupling					
4		1	Cover					
5		1	Pin					
6		2	Pin					
7		1	Tool, retainer bolt	TE2604010100	TE2604010890	TE2604010890	TE2604010900	TE2604010900
8	□	1	Spider, PUR	TE2601000352	TE2601000361	TE2601000361	TE2601000353	TE2601000353
9	□	1	Bearing	TE2601000121	TE2601000094	TE2601000094	TE2601000124	TE2601000124
10	□	1	Bearing	TE2601000123	TE2601000093	TE2601000093	TE2601000125	TE2601000125
11	□	1	PreVent Valve	TE2601000362	TE2601000362	TE2601000362	TE2601000362	TE2601000362
12	□	1	Seal, radial	TE2601000321	TE2601000322	TE2601000359	TE2601000324	TE2601000325
13	□	1	O-ring, FPM	TE2601000304	TE2601000270	TE2601000270	TE2601000274	TE2601000274
14	□	1	O-ring, FPM	TE2601000302	TE2601000271	TE2601000271	TE2601000273	TE2601000273
15	□	1	O-ring, FPM	TE2601000269	TE2601000276	TE2601000276	TE2601000277	TE2601000277
16	□	1	O-ring, FPM	TE2601000277	TE2601000282	TE2601000282	TE2601000284	TE2601000284
17		1	Circlip, inner					
18		1	Spring, wave					
19		1	Screw					
20		1	Extractor bolt	TE2601000336	TE2601000334	TE2601000334	TE2601000334	TE2601000334
21		8	Cap nut					
22		2	Pin					
23		1	Circlip, outer					
25		1	Washer					

		B35/40	B45	B45/50	B55	B55/60
Assembly Kit						
□	**Assembly Kit, Bearing frame B35/40, B45, B45/50, B55, B55/60**	TE261304566B	TE261301100B	TE261305434A	TE261301102B	TE2613065530

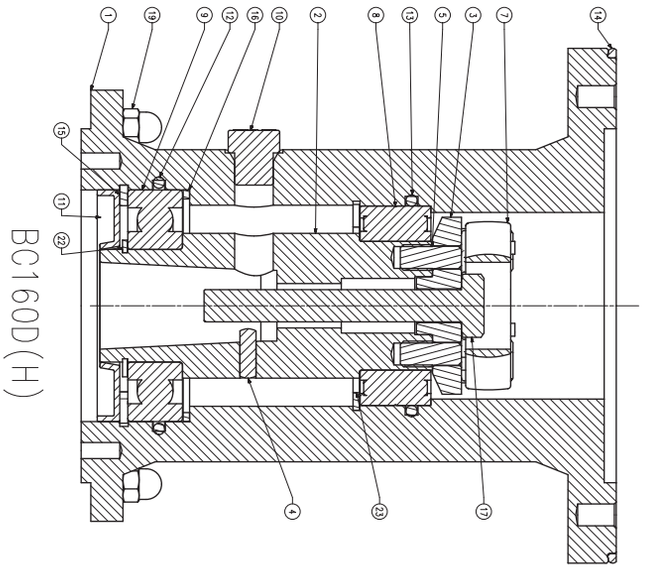
BC160D(H)

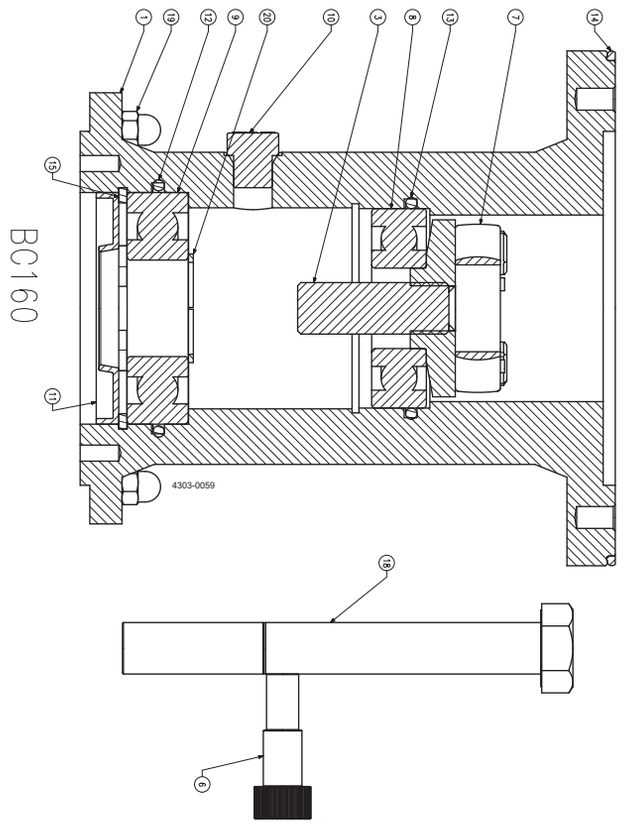
BC160
4303-0059

Pos		Qty	Denomination	BC160/35 (right)	BC160/35 (left)	BC160D/30	BC160DH/30
1		1	Bearing frame - housing				
2		1	Drive shaft				
3		1	Coupling				
4		1	Pin				
5		2	Pin				
6		1	Tool, retainer bolt	TE2604036760	TE2604036760	TE2604036760	TE2604036760
7	□	1	Spider, PUR	TE2601000351	TE2601000351	TE2601000351	TE2601000351
8	□	1	Bearing	TE2601000344	TE2601000344	TE2601000127	TE2601000449
9	□	1	Bearing	TE2601000345	TE2601000345	TE2601000126	TE2601000126
10	□	1	PreVent valve	TE2601000362	TE2601000362	TE2601000362	TE2601000362
11	□	1	Seal, radial	TE2601000320	TE2601000320	TE2601000320	TE2601000320
12	□	1	O-ring, FPM	TE2601000138	TE2601000138	TE2601000138	TE2601000138
13	□	1	O-ring, FPM	TE2601000139	TE2601000139	TE2601000139	TE2601000139
14	□	1	O-ring, FPM	TE2601000276	TE2601000276	TE2601000276	TE2601000276
15		1	Circlip, inner				
16		1	Seeger ring				
17		1	Screw				
18		1	Extractor bolt	TE2601000331	TE2601000331	TE2601000331	TE2601000331
19		8	Cap nut				
20		1	Circlip, outer				
22		7	Circlip, outer				
23		1	Circlip, inner				

				BC160/35 (right)	BC160/35 (left)	BC160D/30	BC160DH/30
Assembly Kit							
	□		**Assembly Kit, Bearing frame BC160/35, BC160D/30, BC160DH/30**	**TE261303783B**	**TE261303783B**	**TE261303672B**	**TE2613071680**

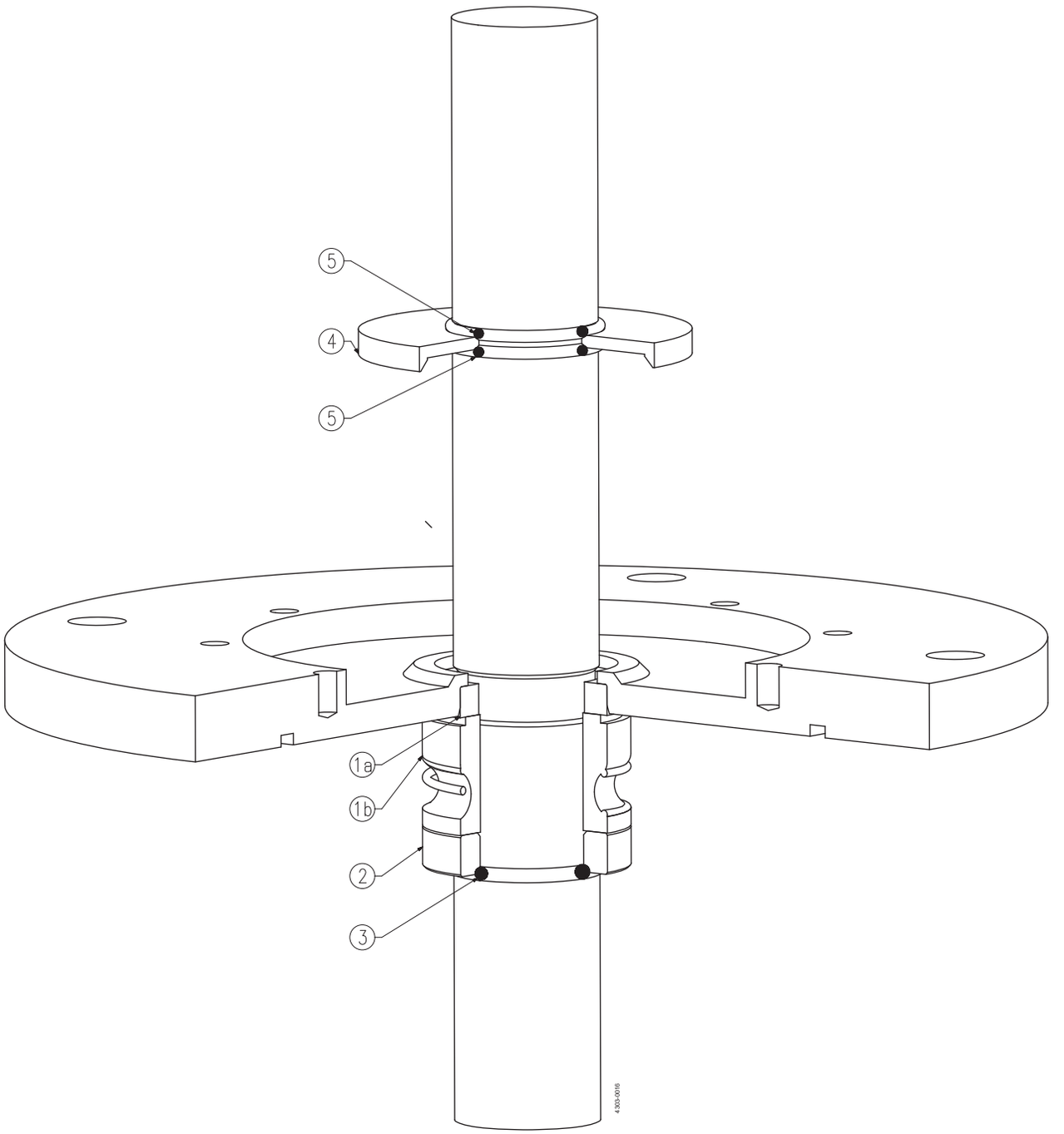
5
4
5
1a
1b
2
3
4305-0016

Pos		Qty	Denomination	size: Ø30	size: Ø35	size: Ø40	size: Ø45
1	□	1	S1 seal, SiC/SiC, EPDM	TE2602000047	TE2602000048	TE2602000056	TE2602000xxx
	♦	1	S1 seal, C/SiC, EPDM	TE2602000053	TE2602000054	TE2602000057	TE2602000055
	○	1	S1 seal, SiC/SiC, FPM	TE2602000081	TE2602000082	TE2602000083	TE2602000xxx
	★	1	S1 seal, C/SiC, FPM	TE2602000084	TE2602000085	TE2602000086	TE2602000291
2		1	Ring, retainer				
3	○★	1	O-ring, FPM	TE2601000411	TE2601000290	TE2601000133	TE2601000040
	□♦	1	O-ring, EPDM	TE2601000001	TE2601000042	TE2601000375	TE2601000424
4		1	Oil / Fluid trap				
		1	Oil / Fluid trap , (BC160/35)				
5	□♦○★	2	O-ring, FPM	TE2601000287	TE2601000289	TE2601000292	TE2601000293

Seal Kits for: Shaft seal type S1

		size: Ø30	size: Ø35	size: Ø40	size: Ø45
Seal Kits					
□	Seal Kit, S1, SiC/SiC, EPDM	TE2613000050	TE2613000051	TE2613000052	TE2613000053
♦	Seal Kit, S1, C/SiC, EPDM	TE2613000054	TE2613000055	TE2613000056	TE2613000057
○	Seal Kit, S1, SiC/SiC, FPM	TE2613000058	TE2613000059	TE2613000060	TE2613000061
★	Seal Kit, S1, C/SiC, FPM	TE2613000062	TE2613000063	TE2613000064	TE2613000065

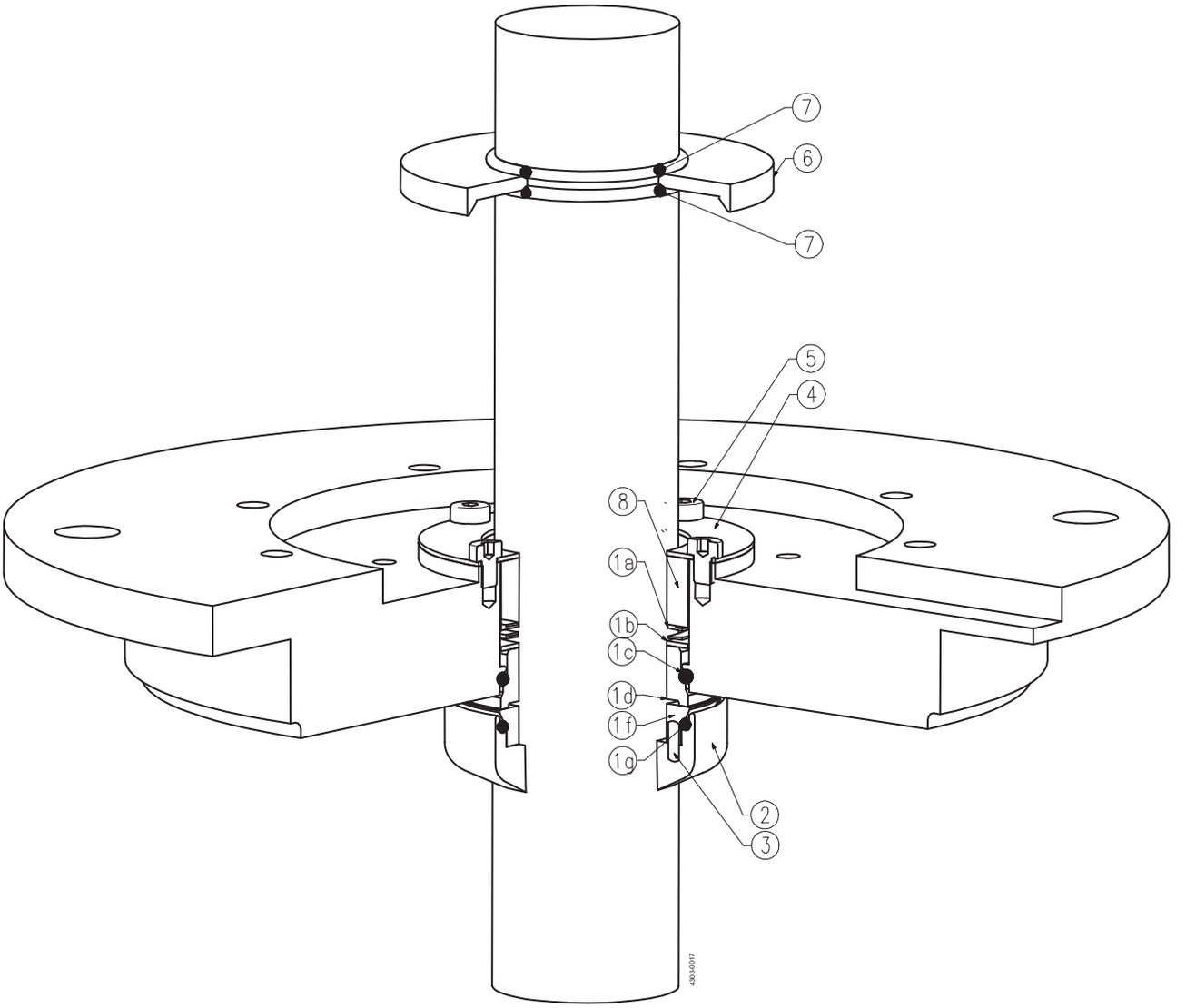
7
6
7
5
4
8
1a
1b
1c
1d
1f
1g
2
3

Pos		Qty	Denomination	size: Ø30	size: Ø40
1	□	1	S2 seal, C/SiC, EPDM	TE2608041570	TE2608012850
	♦	1	S2 seal, SiC/SiC, EPDM	TE2608037220	TE2608045750
	○	1	S2 seal, C/SiC, FPM	TE2608058650	TE2608084680
	★	1	S2 seal, SiC/SiC, FPM	TE2608049740	TE2608049390
2		1	Ring, counter**		
3		2	Pin		
4		1	Ring, retainer		
5		4	Screw		
6		1	Oil / Fluid trap		
7	□♦○★	2	O-ring, FPM	TE2601000287	TE2601000292
		2	O-ring, FPM, BF*	8010019106	
8		1	Spacer		

** Welded onto shaft - maintenance must be carried out by Alfa Laval.

		size: Ø30	size: Ø40
Seal kits			
□	**Seal Kit, S2, C/SiC, EPDM**	TE2613000066	TE2613000068
□	**Seal Kit, S2, C/SiC, EPDM, BF***	8010022652	
♦	**Seal Kit, S2, SiC/SiC, EPDM**	TE2613000067	TE2613000069
♦	**Seal Kit, S2, SiC/SiC, EPDM, BF***	8010022653	
○	**Seal Kit, S2, C/SiC, FPM**	TE2613000070	TE2613000072
○	**Seal Kit, S2, C/SiC, FPM, BF***	8010022654	
★	**Seal Kit, S2, SiC/SiC, FPM**	TE2613000071	TE2613000074
★	**Seal Kit, S2, SiC/SiC, FPM, BF***	8010022655	

* For Agitators with Bearing Frame

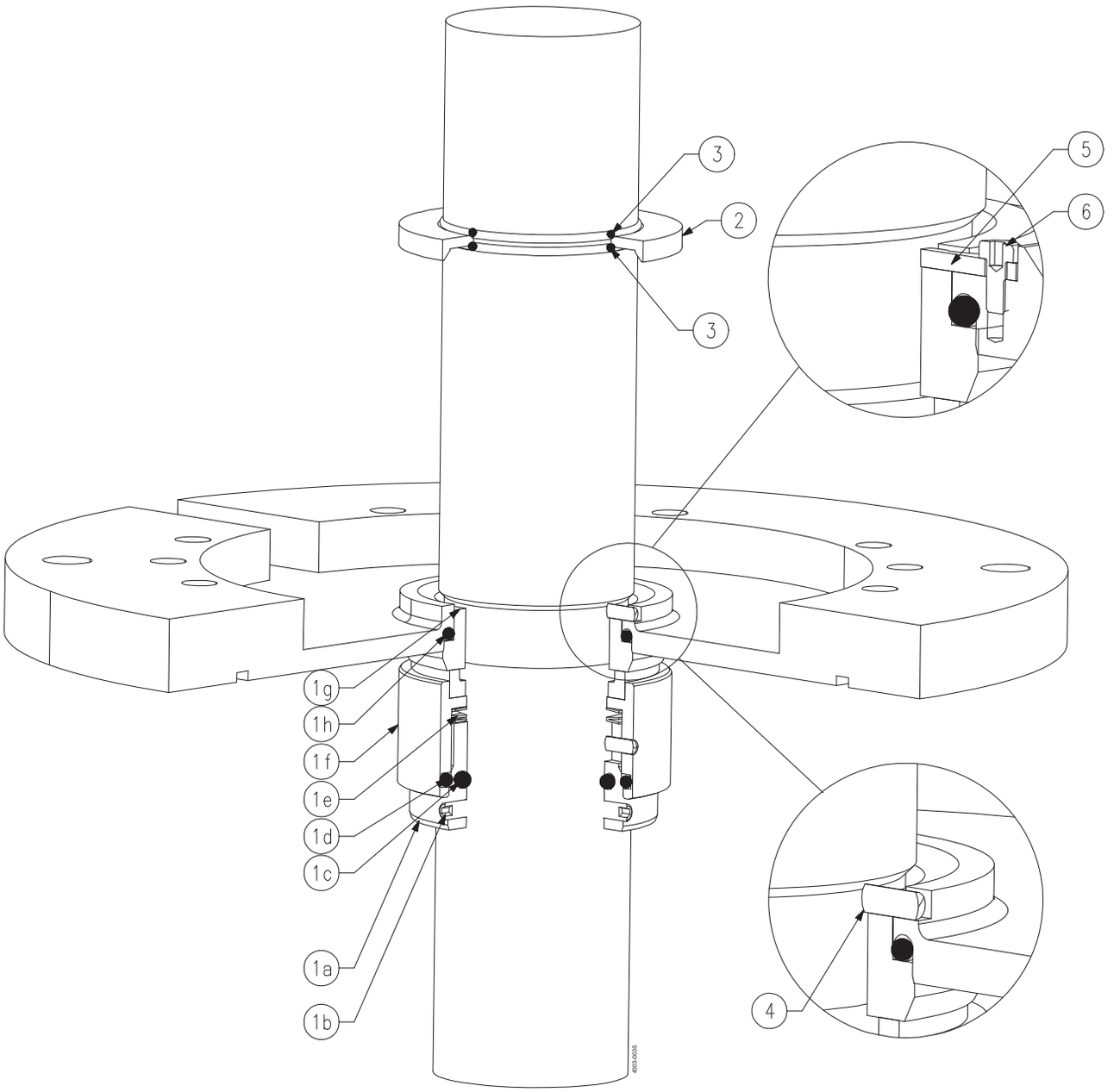
3
2
3
5
6
1g
1h
1f
1e
1d
1c
1a
1b
4
400-0035

Pos		Qty	Denomination	size: Ø30	size: Ø35	size: Ø40	size: Ø45
1	□	1	S3 seal, C/SiC, EPDM	TE2608000017	TE2608000010	TE2608000024	TE2608000026
	◆	1	S3 seal, C/SiC, FPM	TE2608000018	TE2608000013	TE2608000003	TE2608000027
2		1	Oil trap				
		1	Oil trap, (BC160/35)				
3	□◆	2	O-ring, FPM	TE2601000287	TE2601000289	TE2601000292	TE2601000293
4		1	Locking pin	TE2601000428	TE2601000428	TE2601000428	TE2601000428
5		1	Locking plate	TE2604089540	TE2604089540	TE2604089540	TE2604089540
6		1	Screw	TE2601000572	TE2601000572	TE2601000572	TE2601000572

		size: Ø30	size: Ø35	size: Ø40	size: Ø45
Seal Kits					
□	Seal Kit, S3, C/SiC, EPDM	TE2613000087	TE2613000076	TE2613000091	TE2613000093
◆	Seal Kit, S3, C/SiC, FPM	TE2613000104	TE2613000106	TE2613000107	TE2613000108

Pos		Qty	Denomination	size: Ø50	size: Ø55	size: Ø60	size: Ø65
1	□	1	S3 seal, C/SiC, EPDM	TE2608000028	TE2608000031	TE2608000030	TE2608000034
	◆	1	S3 seal, C/SiC, FPM	TE2608000029	TE2608000032	TE2608000033	TE2608000060
2		1	Oil trap				
3	□◆	2	O-ring, FPM	TE2601000294	TE2601000295	TE2601000297	TE2601000059
4		1	Locking pin	TE2601000428	TE2601000428	TE2601000428	TE2601000428
5		1	Locking plate	TE2604089540	TE2604089540	TE2604089540	TE2604089540
6		1	Screw	TE2601000572	TE2601000572	TE2601000572	TE2601000572

		size: Ø50	size: Ø55	size: Ø60	size: Ø65
Seal Kits					
□	Seal Kit, S3, C/SiC, EPDM	TE2613000095	TE2613000096	TE2613000098	TE2613000099
◆	Seal Kit, S3, C/SiC, FPM	TE2613000109	TE2613000110	TE2613000112	TE2613000113

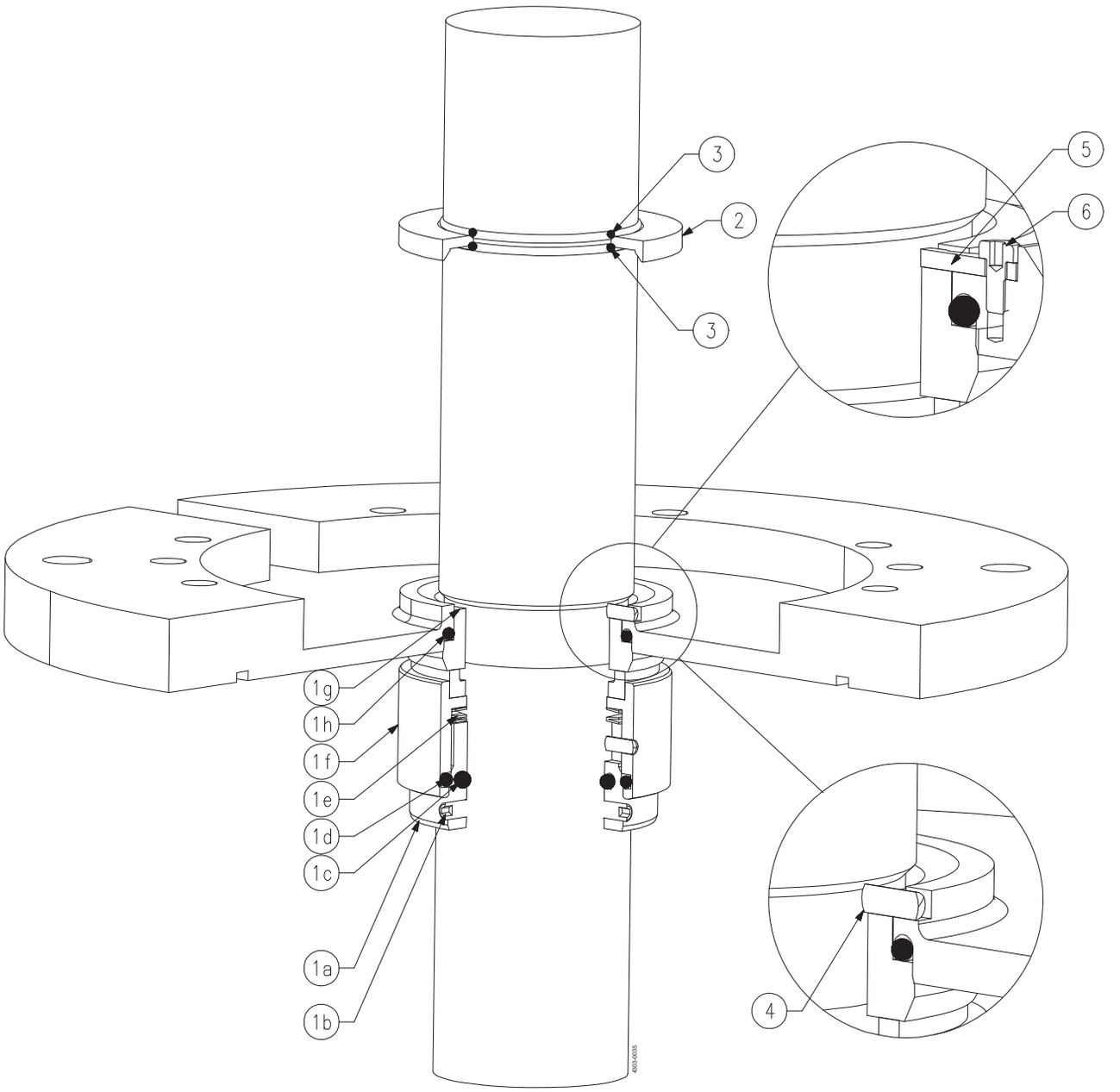
3
2
3
5
6
1g
1h
1f
1e
1d
1c
1a
1b
4
400-0035

Pos		Qty	Denomination	size: Ø70	size: Ø75	size: Ø80	size: Ø90
1	□	1	S3 seal,, C/SiC, EPDM	TE2608000036	TE2608000038	TE2608000040	TE2608000044
	◆	1	S3 seal, C/SiC, FPM	TE2608000037	TE2608000039	TE2608000041	TE2608000045
2		1	Oil trap				
3	□◆	2	O-ring, FPM	TE2601000039	TE2601000403	TE2601000151	TE2601000097
4		1	Locking pin	TE2601000428	TE2601000428	TE2601000428	TE2601000428
5		1	Locking plate	TE2604089540	TE2604089540	TE2604089540	TE2604089540
6		1	Screw	TE2601000572	TE2601000572	TE2601000572	TE2601000572

		size: Ø70	size: Ø75	size: Ø80	size: Ø90
Seal Kits					
□	**Seal Kit, S3, C/SiC, EPDM**	**TE2613000100**	**TE2613000101**	**TE2613000102**	**TE2613000103**
◆	**Seal Kit, S3, C/SiC, FPM**	**TE2613000116**	**TE2613000117**	**TE2613000118**	**TE2613000120**

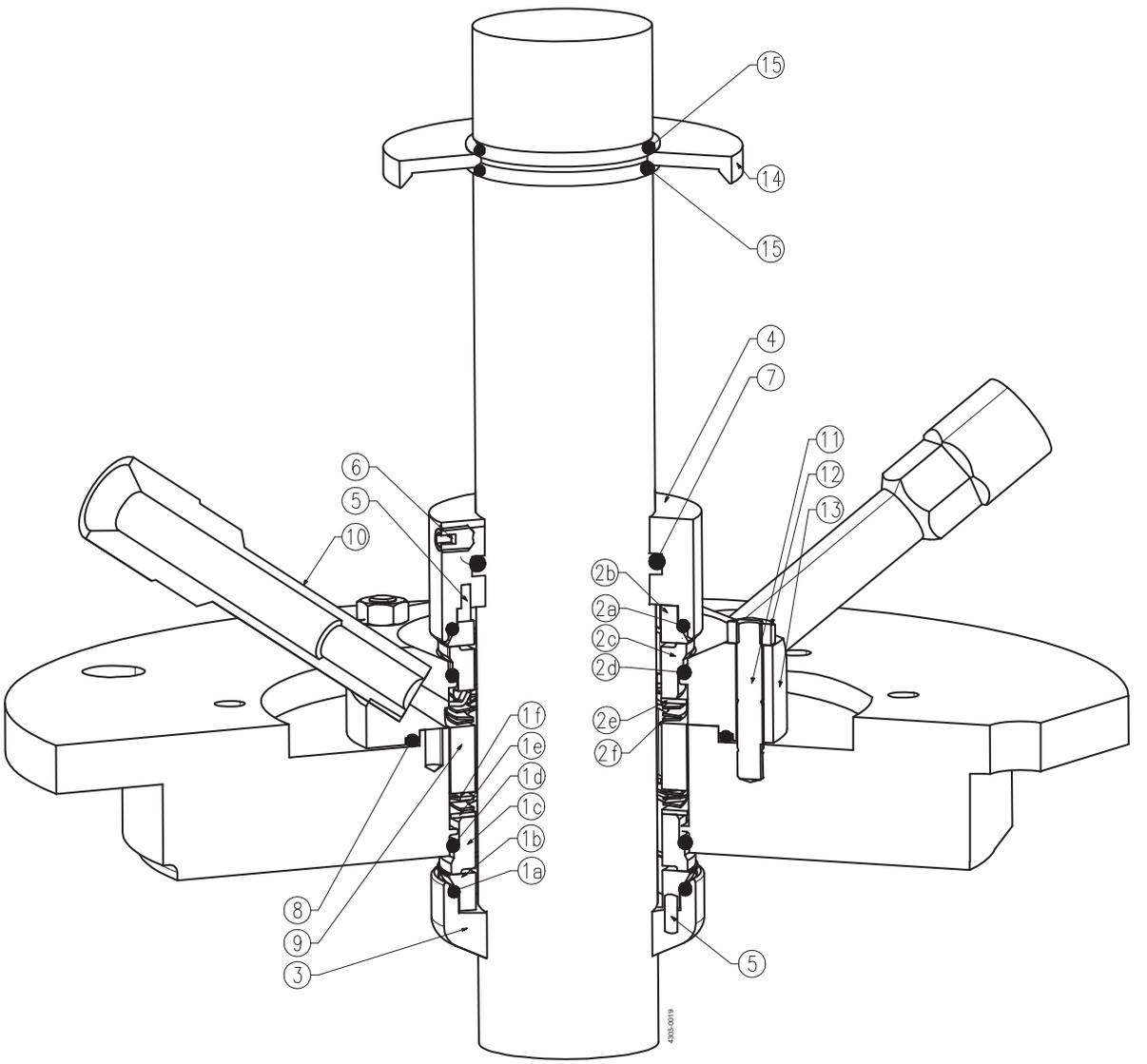
15
14
15
4
7
11
12
13
6
5
10
2b
2a
2c
2d
2e
2f
1f
1e
1d
1c
1b
1a
8
9
3
5
4303.0019

Pos		Qty	Denomination	size: Ø30	size: Ø40
1	♦	1	Seal, C/SiC, EPDM	TE2608041570	TE2608012850
	★	1	Seal, SiC/SiC, EPDM	TE2608037220	TE2608045750
	□	1	Seal, C/SiC, FPM	TE2608058650	TE2608084680
	○	1	Seal, SiC/SiC, FPM	TE2608049740	TE2608049390
2	♦★	1	Seal, C/SiC, EPDM	TE2608041570	TE2608012850
	□○	1	Seal, C/SiC, FPM	TE2608058650	TE2608084680
3		1	Ring, counter**		
4		1	Ring, counter		
5		4	Pin		
6		1	Screw, pointed		
7	□○	1	O-ring, FPM	TE2601000411	TE2601000040
	♦★	1	O-ring, EPDM	TE2601000001	TE2601000424
8	□○	1	O-ring, FPM	TE2601000450	TE2601000403
	♦★	1	O-ring, EPDM	TE2601000387	TE2601000392
9		1	Spacer, (15mm)		
		1	Spacer, (14mm)		
		1	Spacer, (1mm)		
10		2	Flush, connection 1/2"-14 BSP		
11		4	Stud		
12		4	Nut		
13		1	Seal housing		
14		1	Oil trap		
15	□♦○★	2	O-ring, FPM	TE2601000287	TE2601000292
		2	O-ring, FPM, BF*	8010019106	

**Welded onto shaft - maintenance must be carried out by Alfa Laval.

		Ø30	Ø40
Seal kits			
□	**Seal Kit, D, C/SiC-C/SiC, FPM**	**TE2613000121**	**TE2613000122**
□	**Seal Kit, D, C/SiC-C/SiC, FPM, BF***	**8010022656**	
♦	**Seal Kit, D, C/SiC-C/SiC, EPDM**	**TE2613000123**	**TE2613000124**
♦	**Seal Kit, D, C/SiC-C/SiC, EPDM, BF***	**8010022657**	
○	**Seal Kit, D, SiC/SiC-C/SiC, FPM**	**TE2613000125**	**TE2613000126**
○	**Seal Kit, D, SiC/SiC-C/SiC, FPM, BF***	**8010022658**	
★	**Seal Kit, D, SiC/SiC-C/SiC, EPDM**	**TE2613000127**	**TE2613000128**
★	**Seal Kit, D, SiC/SiC-C/SiC, EPDM, BF***	**8010022659**	

* For Agitators with Bearing Frame

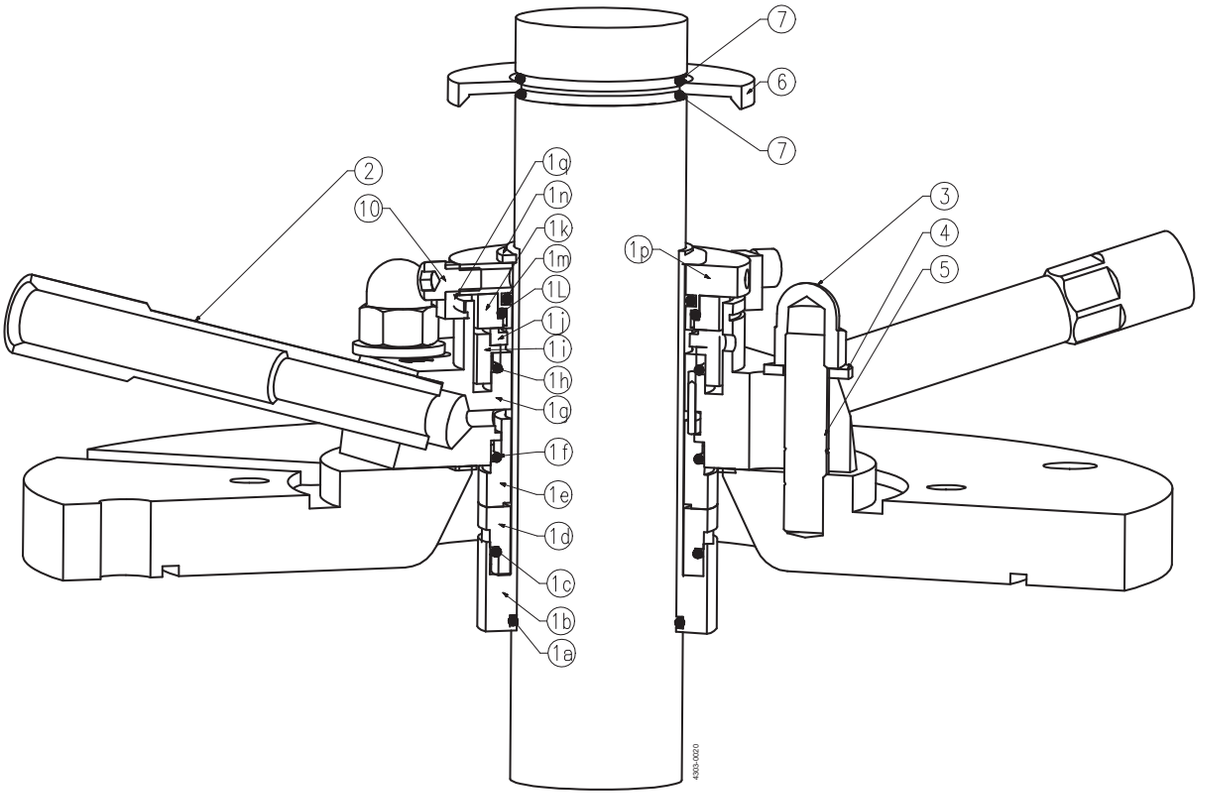
7
6
7
2
10
1q
1n
1k
1m
1L
1j
1i
1h
1g
1f
1e
1d
1c
1b
1a
1p
3
4
5
4303-0020

Pos		Qty	Denomination	size: Ø30	size: Ø35	size: Ø40	size: Ø45
1	□	1	DC seal, C/SiC-C/SiC, EPDM	TE2602000224	TE2602000236	TE2602000091	TE2602000075
	♦	1	DC seal, C/SiC-C/SiC, FPM	TE2602000228	TE2602000239	TE2602000242	TE2602000203
	○	1	DC seal, SiC/SiC-C/SiC, EPDM	TE2602000225	TE2602000237	TE2602000241	TE2602000244
	★	1	DC seal, SiC/SiC-C/SiC, FPM	TE2602000229	TE2602000240	TE2602000243	TE2602000247
2		2	Flush, connection 1/2"-14 BSP	TE2602029060	TE2602029060	TE2602055590	TE2602055590
3		4	Cap nut, M10	TE2601000195	TE2601000195		
		4	Cap nut, M12		TE2601000261	TE2601000261	TE2601000261
4		4	Washer, M10	TE2601000346	TE2601000346		
		4	Washer, M12		TE2601000347	TE2601000347	TE2601000347
5		4	Stud, M10	TE2601000308	TE2601000308		
		4	Stud, M12		TE2601000593	TE2601000593	TE2601000593
6		1	Oil trap	TE2604061570	TE2604059350	TE2604055860	TE2604040440
7	□♦○★	2	O-ring, FPM	TE2601000287	TE2601000289	TE2601000292	TE2601000293

	size: Ø30	size: Ø35	size: Ø40	size: Ø45
Seal kits				
□ Seal Kit, DC, C/SiC-C/SiC, EPDM	TE2613000137	TE2613000138	TE2613000139	TE2613000140
♦ Seal Kit, DC, C/SiC-C/SiC, FPM	TE2613000144	TE2613000145	TE2613000146	TE2613000147
○ Seal Kit, DC, SiC/SiC-C/SiC, EPDM	TE2613000151	TE2613000152	TE2613000153	TE2613000154
★ Seal Kit, DC, SiC/SiC-C/SiC, FPM	TE2613000158	TE2613000159	TE2613000160	TE2613000161

Pos		Qty	Denomination	size: Ø50	size: Ø55	size: Ø60	size: Ø70
1	□	1	DC seal, C/SiC-C/SiC, EPD	TE2602000189	TE2602000251	TE2602000257	TE2602000272
	♦	1	DC seal, C/SiC-C/SiC, FPM	TE2602000249	TE2602000255	TE2602000260	TE2602000276
	○	1	DC seal, SiC/SiC-C/SiC, EPD	TE2602000248	TE2602000252	TE2602000202	TE2602000273
	★	1	DC seal, SiC/SiC-C/SiC, FPM	TE2602000250	TE2602000256	TE2602000261	TE2602000277
2		2	Flush, connection 1/2"-14 BSP	TE2602055590	TE2602055590	TE2602055590	TE2602055590
3		4	Cap nut, M12	TE2601000261	TE2601000261	TE2601000261	TE2601000261
4		4	Washer, M12	TE2601000347			
		4	Washer, special		TE2607014100	TE2607014100	TE2607014100
5		4	Stud, M12	TE2601000593	TE2601000593	TE2601000593	TE2601000593
6		1	Oil trap	TE2604039770	TE2604034420	TE2604053450	TE2604076710
7	□♦○★	2	O-ring, FPM	TE2601000294	TE2601000295	TE2601000297	TE2601000039

	size: Ø50	size: Ø55	size: Ø60	size: Ø70
Seal kits				
□ Seal Kit, DC, C/SiC-C/SiC, EPDM	TE2613000141	TE2613000142	TE2613000143	9615478601
♦ Seal Kit, DC, C/SiC-C/SiC, FPM	TE2613000148	TE2613000149	TE2613000150	9615478701
○ Seal Kit, DC, SiC/SiC-C/SiC, EPDM	TE2613000155	TE2613000156	TE2613000157	9615478801
★ Seal Kit, DC, SiC/SiC-C/SiC, FPM	TE2613000162	TE2613000163	TE2613000164	9615478901

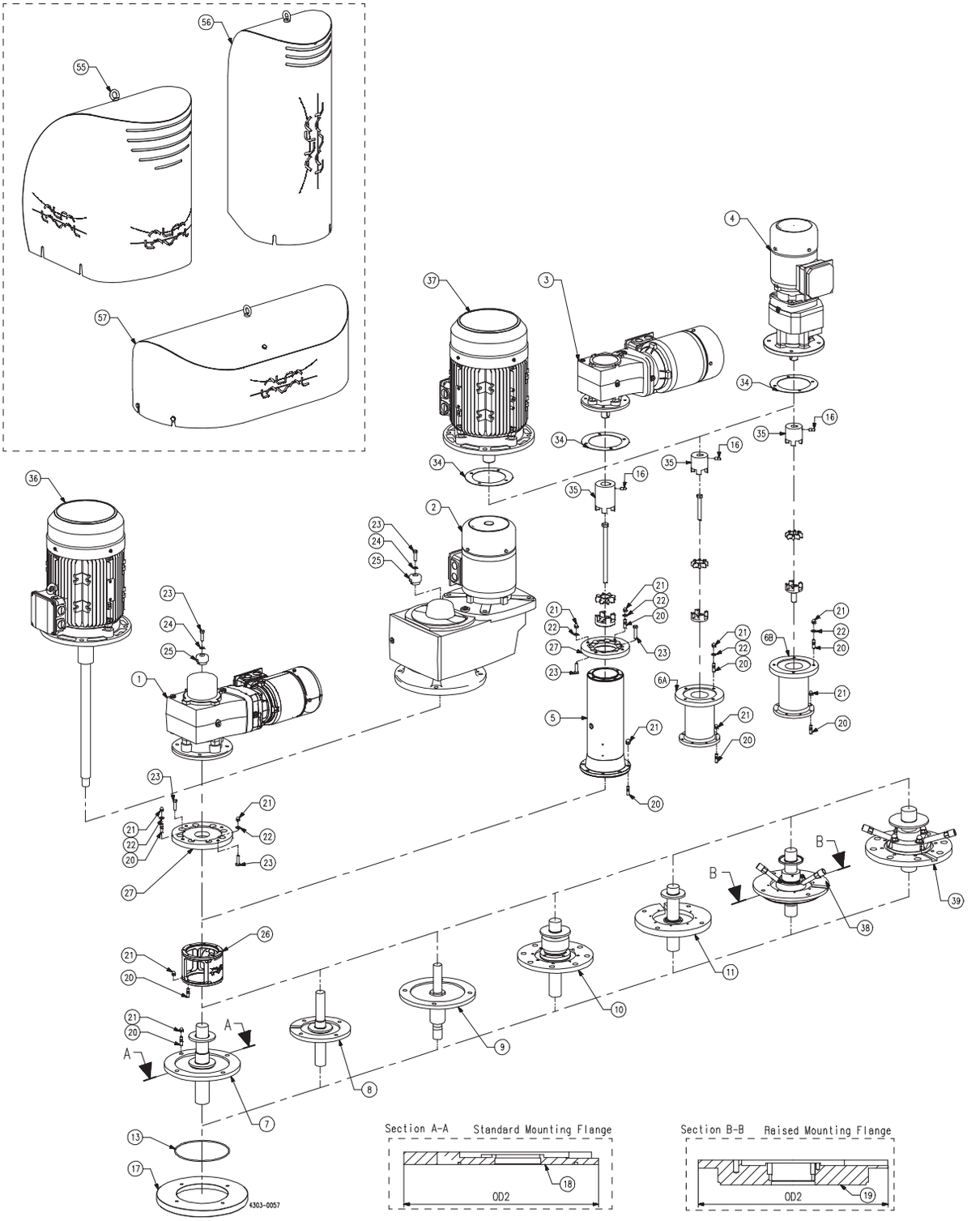
Section A-A Standard Mounting Flange
OD2
Section B-B Raised Mounting Flange
OD2
4303-0057

Pos		Qty	Denomination	Flange seal Thickness 3.53	Flange seal Thickness 3.33	Flange seal LKR agitator
1	□	1	GR gear motor, hollow shaft			
2	□	1	GP gear motor, hollow shaft			
3	□	1	GR gear motor, output shaft			
4	□	1	GC gear motor, output shaft			
5	◆	1	Bearing frame B20, B25, B25/30, B35, B35/40, B45, B45/50, B55, B55/60			
6	◆	1	Bearing frame, BC160/35, BC160D/30, BC160DH/30			
7	◆	1	Shaft seal type R			
8	◆	1	Shaft seal type G			
9	◆	1	Shaft seal type V			
10	◆	1	Shaft seal type S			
11	◆	1	Shaft seal type S3			
38	◆	1	Shaft seal type D			
39	◆	1	Shaft seal type DC			
13		1	O-ring, FEP (for flange OD2=134, std)	TE2601000078		
		1	O-ring, FEP (for flange OD2=134, raised)	TE2601000078		
		1	O-ring, FEP (for flange OD2=140, std)	TE2601000078		
		1	O-ring, FEP (for flange OD2=160, std)	TE2601000078		
		1	O-ring, FEP (for flange OD2=200, std)	TE2601000073		
		1	O-ring, FEP (for flange OD2=200, raised)	TE2601000073		
		1	O-ring, FEP (for flange OD2=220, std)	TE2601000073		
		1	O-ring, EPDM (for flange OD2=225, raised)			TE2601000146
		1	O-ring, FPM (for flange OD2=225, raised)			TE2601000679
		1	O-ring, FEP (for flange OD2=230, std)	TE2601000074		
		1	O-ring, FEP (for flange OD2=250, std)	TE2601000074		
		1	O-ring, FEP (for flange OD2=250, raised)	TE2601000396		
		1	O-ring, FEP (for flange OD2=285, std)	TE2601000074		
		1	O-ring, FEP (for flange OD2=285, std)	TE2601000550		
		1	O-ring, FEP (for flange OD2=300, std)	TE2601000075		
		1	O-ring, EPDM (for flange OD2=300, std)			TE2601000371
		1	O-ring, FPM (for flange OD2=300, std)			TE2601000412
		1	O-ring, FEP (for flange OD2=325, std)	TE2601000076		
		1	O-ring, FEP (for flange OD2=340, std)	TE2601000075		
		1	O-ring, FEP (for flange OD2=342,9, std)	TE2601000076		
		1	O-ring, FEP (for flange OD2=350, std)	TE2601000076		
		1	O-ring, FEP (for flange OD2=395, std)	TE2601000163		
		1	O-ring, FEP (for flange OD2=395, std)		9615483101	
		1	O-ring, FEP (for flange OD2=400, std)	TE2601000163		
		1	O-ring, FEP (for flange OD2=406,4, std)	TE2601000163		
		1	O-ring, FEP (for flange OD2=445, std)	TE2601000163		
		1	O-ring, FEP (for flange OD2=455, std)		9615483201	
		1	O-ring, FEP (for flange OD2=450, std)	TE2601000164		
		1	O-ring, FEP (for flange OD2=505, std)		9615483301	
		1	O-ring, FEP (for flange OD2=550, std)	TE2601000571		
16	□	X	Screw, pointed			
17	□	1	Welding flange			
18	□	1	Mounting flange, standard			
19	□	1	Mounting flange, raised			
20	□	X	Stud			
21	□	X	Cap nut			
22	□	X	Washer			
23	□	X	Screw			
24	□	1	Washer, Nord Lock			
25	□	1	Fixing element			
26	□	1	Lantern, complete, *)			
27	□	1	Drive unit flange			
34	□	1	Flat gasket, Ø160 **)	9615345101		
	□	1	Flat gasket, Ø200 **)	9615345102		
	□	1	Flat gasket, Ø250 **)	9615345103		
	□	1	Flat gasket, Ø300 **)	9615345104		
	□	1	Flat gasket, Ø350 **)	9615345105		
35	□	1	Coupling			
36	□	1	Motor and shaft unit			
37	□	1	Motor			

❑ Article number available upon request by serial number or article number of the Agitator.

◆ Article number is to be found in the next section matching the specific bearing frame and shaft seal type.

X Quantity may vary depending on Agitator type, will be informed upon request.

*) Qty = 2 when shaft seal type DC and shaft diameter Ø80 or Ø90.

**) Part of bearing frame spare part kit.

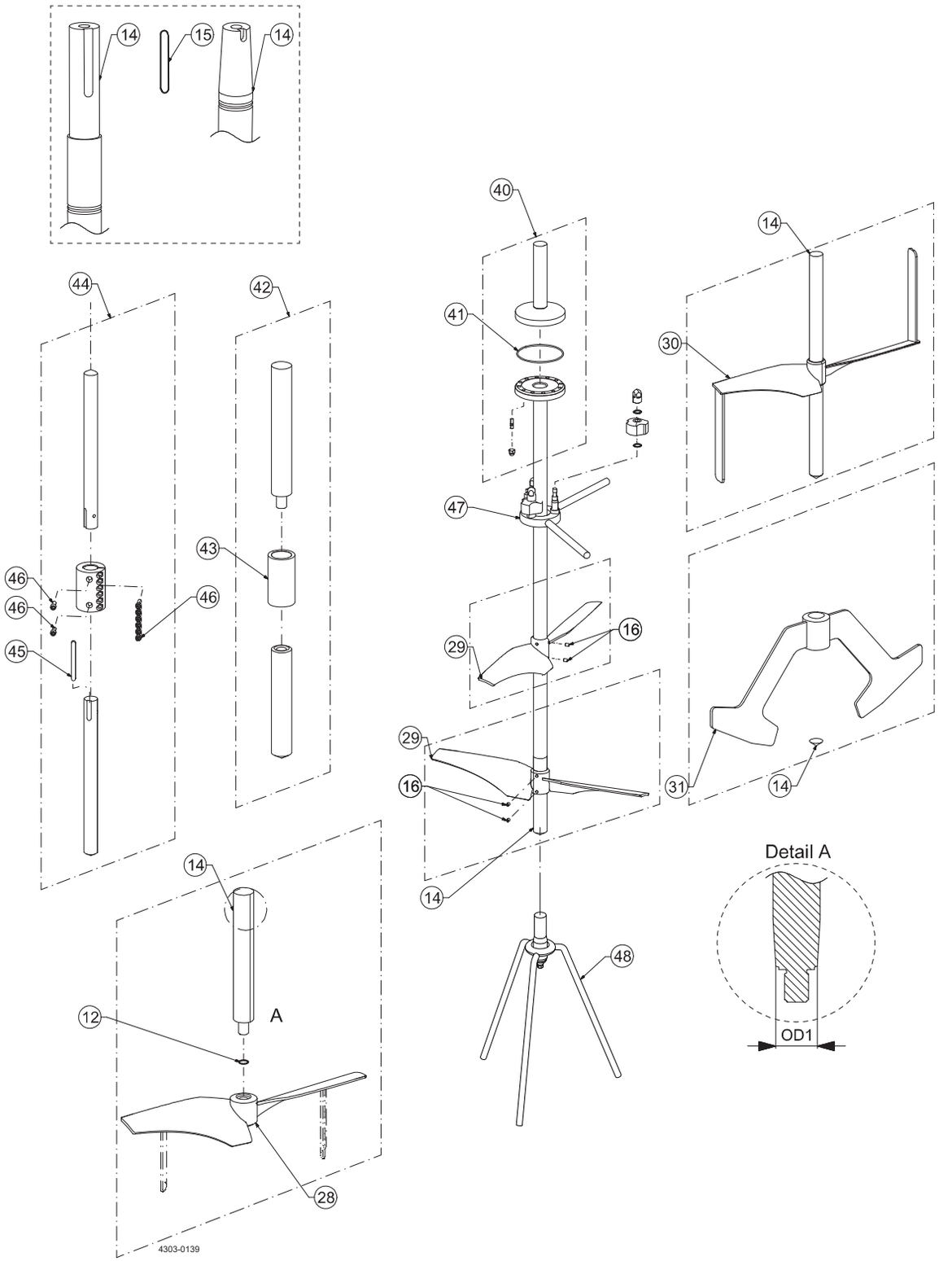
14
15
14
44
42
40
41
14
30
47
43
46
46
46
45
16
29
29
16
31
14
14
Detail A
14
A
12
48
OD1
28
4303-0139

Pos		Qty	Denomination	Impeller seal
12	◆	1	O-ring, FEP (for shaft size OD1=25)	TE2601000243
	◆	1	O-ring, FEP (for shaft size OD1=30)	TE2601000244
	◆	1	O-ring, FEP (for shaft size OD1=35)	TE2601000245
	◆	1	O-ring, FEP (for shaft size OD1=40)	TE2601000246
	◆	1	O-ring, FEP (for shaft size OD1=45)	TE2601000247
	◆	1	O-ring, FEP (for shaft size OD1=50)	TE2601000248
	◆	1	O-ring, FEP (for shaft size OD1=55)	TE2601000249
	◆	1	O-ring, FEP (for shaft size OD1=60)	TE2601000250
	◆	1	O-ring, FEP (for shaft size OD1=65)	TE2601000189
	◆	1	O-ring, FEP (for shaft size OD1=70)	TE2601000609
	◆	1	O-ring, FEP (for shaft size OD1=75)	TE2601000610
	◆	1	O-ring, FEP (for shaft size OD1=80)	TE2601000611
	◆	1	O-ring, FEP (for shaft size OD1=90)	TE2601000612
14	□	1	Shaft	
15	□	1	Parrallel key	
16	□	X	Screw, pointed	
28	□	1	Impeller device, EnSaFoil (ESF or ESFL), w. thread	
29	□	1-10	Impeller device, EnSaFoil, (ESF or ESFL), w. screws or welded	
30	□	1-10	Impeller device, EnSaFerm, (ESFm), w. screws or welded	
31	□	1	Impeller device, Low level, (LLI), w. screws or welded	
40	◆	1	Shaft and coupling unit	
41		1	O-ring, FEP (for shaft Ø25-Ø60)	TE2601000073
		1	O-ring, FEP (for shaft Ø65-Ø90)	TE2601000396
42	□	X	Welded shaft coupling	
43	□	X	Sleeve for welded shaft coupling	
44	□	X	Sleeve coupling	
45	□	X	Parrallel key for sleeve coupling	
46	□	X	Screw	
47	◆		Intermediate support	
48	◆		Bottom support, type 3	

□ Article number available upon request by serial number or article number of the agitator.

◆ Article number is to be found in the next section matching the specific bearing frame and shaft seal type.

X Quantity may vary depending on agitator type, will be informed upon request.

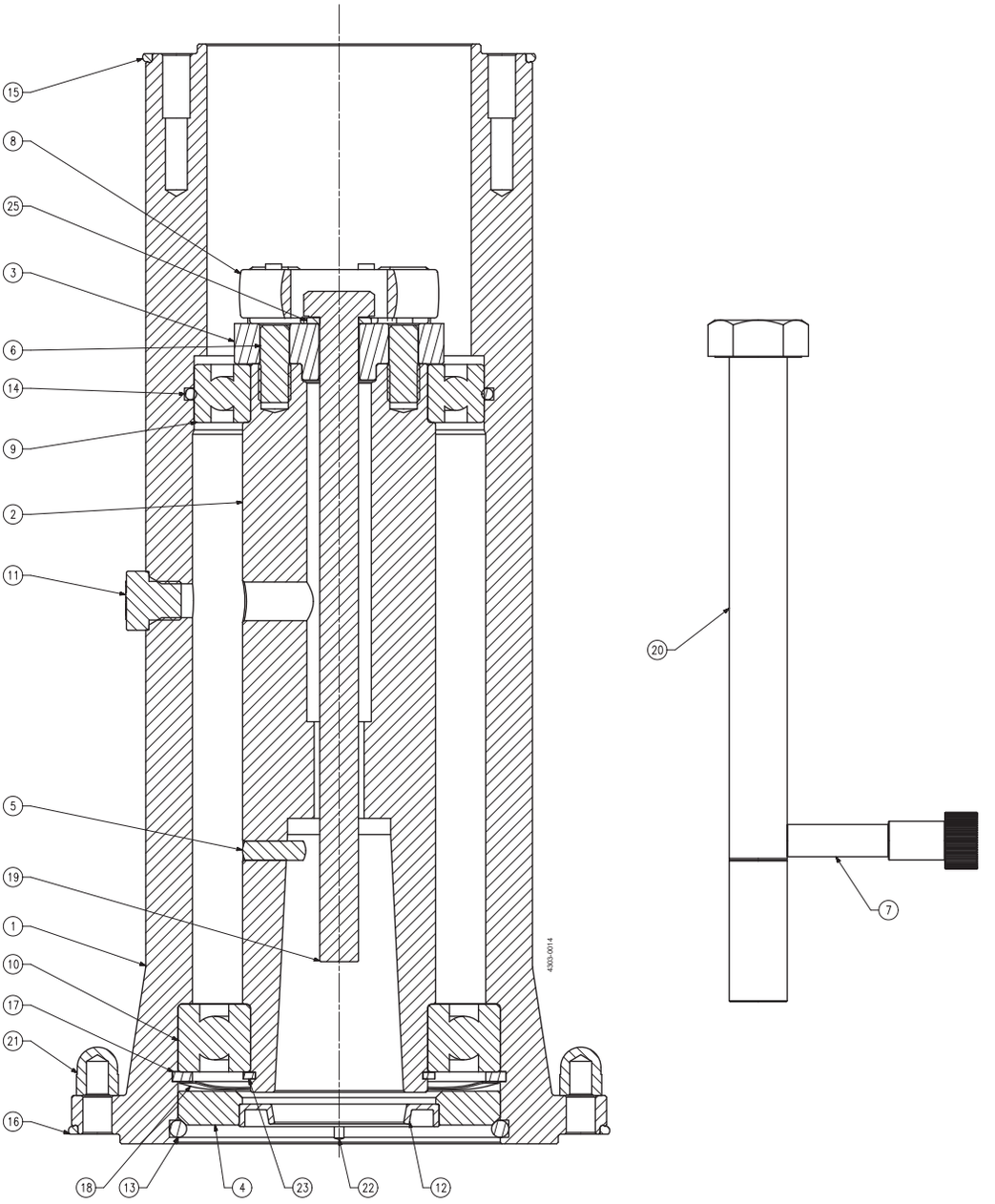
15
8
25
3
6
14
9
2
11
5
19
1
10
17
21
16
18
13
4
23
22
12
20
7
4303-0014

Pos		Qty	Denomination	B20	B25	B25/30	B35
1		1	Bearing frame - housing				
2		1	Drive shaft				
3		1	Coupling				
4		1	Cover				
5		1	Pin				
6		2	Pin				
7		1	Tool, retainer bolt	TE2604010700	TE2604010700	TE2604010700	TE2604010100
8	□	1	Spider, PUR	TE2601000351	TE2601000351	TE2601000351	TE2601000352
9	□	1	Bearing	TE2601000120	TE2601000120	TE2601000120	TE2601000121
10	□	1	Bearing	TE2601000122	TE2601000122	TE2601000122	TE2601000123
11	□	1	PreVent Valve	TE2601000362	TE2601000362	TE2601000362	TE2601000362
12	□	1	Seal, radial	TE2601000560	TE2601000592	TE2601000318	TE2601000227
13	□	1	O-ring, FPM	TE2601000301	TE2601000301	TE2601000301	TE2601000304
14	□	1	O-ring, FPM	TE2601000300	TE2601000300	TE2601000300	TE2601000302
15	□	1	O-ring, FPM	TE2601000303	TE2601000303	TE2601000303	TE2601000269
16	□	1	O-ring, FPM	TE2601000269	TE2601000269	TE2601000269	TE2601000277
17		1	Circlip, inner				
18		1	Spring, wave				
19		1	Screw				
20		1	Extractor bolt	TE2601000331	TE2601000331	TE2601000331	TE2601000336
21		8	Cap nut				
22		2	Pin				
23		1	Circlip, outer				
25		1	Washer				

		B20	B25	B25/30	B35
Assembly Kit					
□	**Assembly Kit, Bearing frame B20, B25, B25/30, B35**	TE261301266B	TE261301267B	TE2613066880	TE261301269C

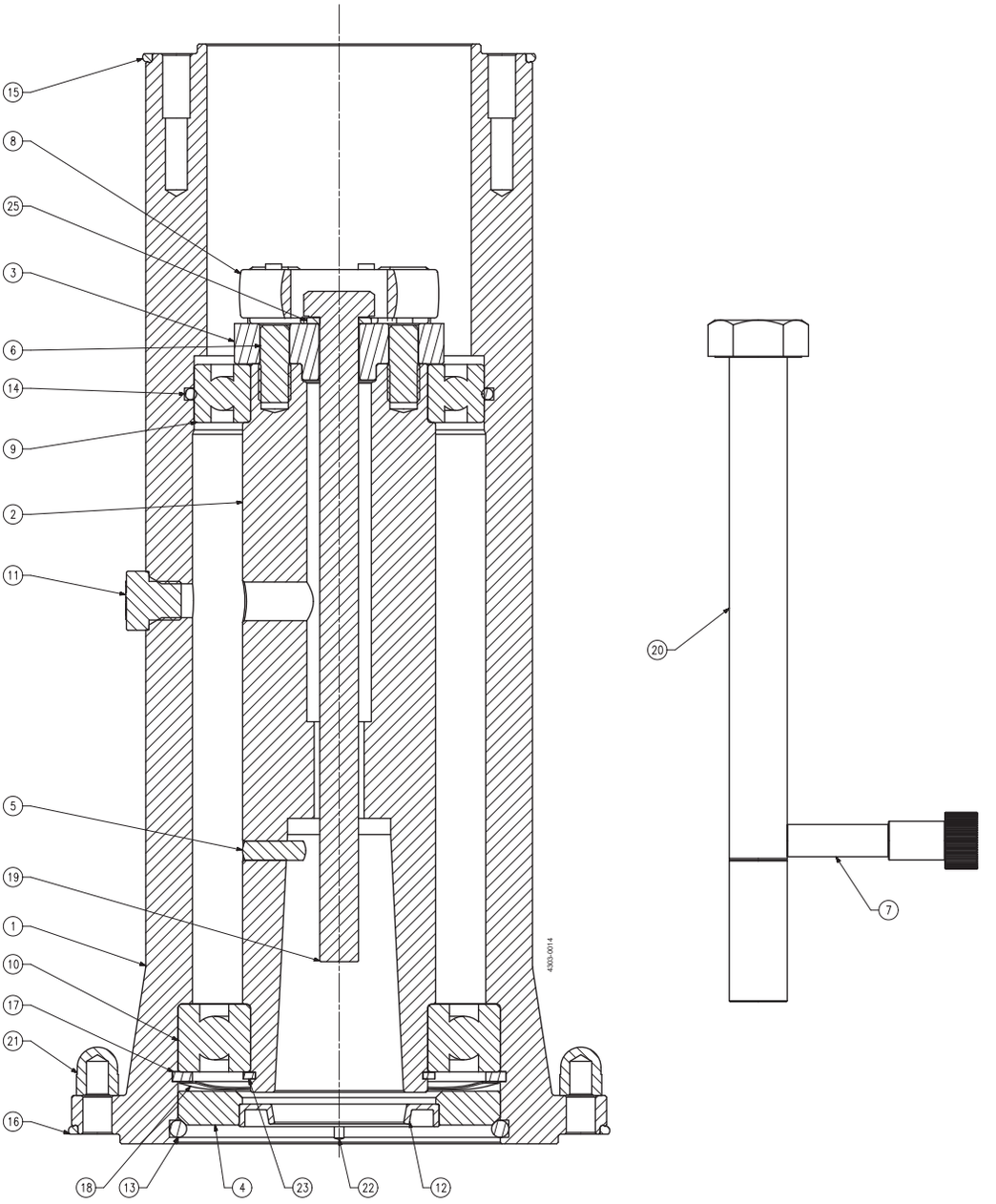
15
8
25
3
6
14
9
2
11
5
19
1
10
17
21
16
18
13
4
23
22
12
20
7
4303-0014

Pos		Qty	Denomination	B35/40	B45	B45/50	B55	B55/60
1		1	Bearing frame - housing					
2		1	Drive shaft					
3		1	Coupling					
4		1	Cover					
5		1	Pin					
6		2	Pin					
7		1	Tool, retainer bolt	TE2604010100	TE2604010890	TE2604010890	TE2604010900	TE2604010900
8	□	1	Spider, PUR	TE2601000352	TE2601000361	TE2601000361	TE2601000353	TE2601000353
9	□	1	Bearing	TE2601000121	TE2601000094	TE2601000094	TE2601000124	TE2601000124
10	□	1	Bearing	TE2601000123	TE2601000093	TE2601000093	TE2601000125	TE2601000125
11	□	1	PreVent Valve	TE2601000362	TE2601000362	TE2601000362	TE2601000362	TE2601000362
12	□	1	Seal, radial	TE2601000321	TE2601000322	TE2601000359	TE2601000324	TE2601000325
13	□	1	O-ring, FPM	TE2601000304	TE2601000270	TE2601000270	TE2601000274	TE2601000274
14	□	1	O-ring, FPM	TE2601000302	TE2601000271	TE2601000271	TE2601000273	TE2601000273
15	□	1	O-ring, FPM	TE2601000269	TE2601000276	TE2601000276	TE2601000277	TE2601000277
16	□	1	O-ring, FPM	TE2601000277	TE2601000282	TE2601000282	TE2601000284	TE2601000284
17		1	Circlip, inner					
18		1	Spring, wave					
19		1	Screw					
20		1	Extractor bolt	TE2601000336	TE2601000334	TE2601000334	TE2601000334	TE2601000334
21		8	Cap nut					
22		2	Pin					
23		1	Circlip, outer					
25		1	Washer					

				B35/40	B45	B45/50	B55	B55/60
Assembly Kit								
	□		**Assembly Kit, Bearing frame B35/40, B45, B45/50, B55, B55/60**	TE261304566B	TE261301100B	TE261305434A	TE261301102B	TE2613065530

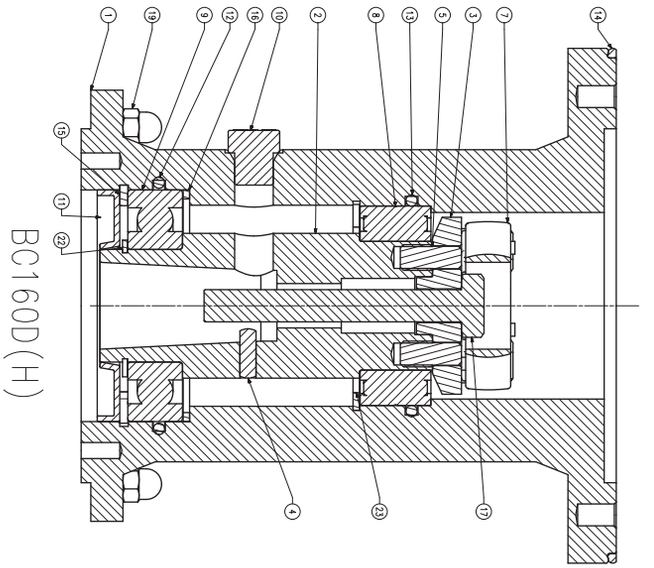
BC160D(H)

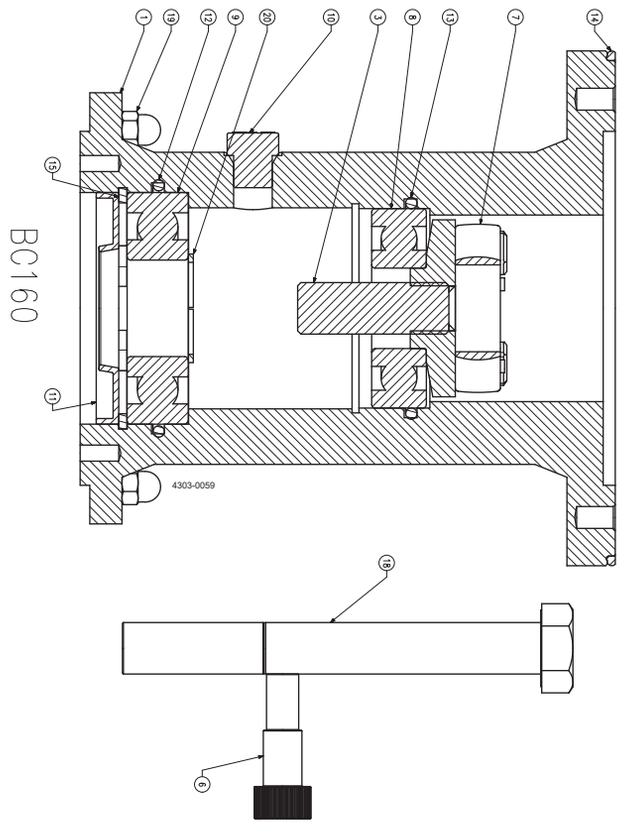
BC160
4303-0059

Pos		Qty	Denomination	BC160/35 (right)	BC160/35 (left)	BC160D/30	BC160DH/30
1		1	Bearing frame - housing				
2		1	Drive shaft				
3		1	Coupling				
4		1	Pin				
5		2	Pin				
6		1	Tool, retainer bolt	TE2604036760	TE2604036760	TE2604036760	TE2604036760
7	□	1	Spider, PUR	TE2601000351	TE2601000351	TE2601000351	TE2601000351
8	□	1	Bearing	TE2601000344	TE2601000344	TE2601000127	TE2601000449
9	□	1	Bearing	TE2601000345	TE2601000345	TE2601000126	TE2601000126
10	□	1	PreVent valve	TE2601000362	TE2601000362	TE2601000362	TE2601000362
11	□	1	Seal, radial	TE2601000320	TE2601000320	TE2601000320	TE2601000320
12	□	1	O-ring, FPM	TE2601000138	TE2601000138	TE2601000138	TE2601000138
13	□	1	O-ring, FPM	TE2601000139	TE2601000139	TE2601000139	TE2601000139
14	□	1	O-ring, FPM	TE2601000276	TE2601000276	TE2601000276	TE2601000276
15		1	Circlip, inner				
16		1	Seeger ring				
17		1	Screw				
18		1	Extractor bolt	TE2601000331	TE2601000331	TE2601000331	TE2601000331
19		8	Cap nut				
20		1	Circlip, outer				
22		7	Circlip, outer				
23		1	Circlip, inner				

				BC160/35 (right)	BC160/35 (left)	BC160D/30	BC160DH/30
Assembly Kit							
□			**Assembly Kit, Bearing frame BC160/35, BC160D/30, BC160DH/30**	**TE261303783B**	**TE261303783B**	**TE261303672B**	**TE2613071680**

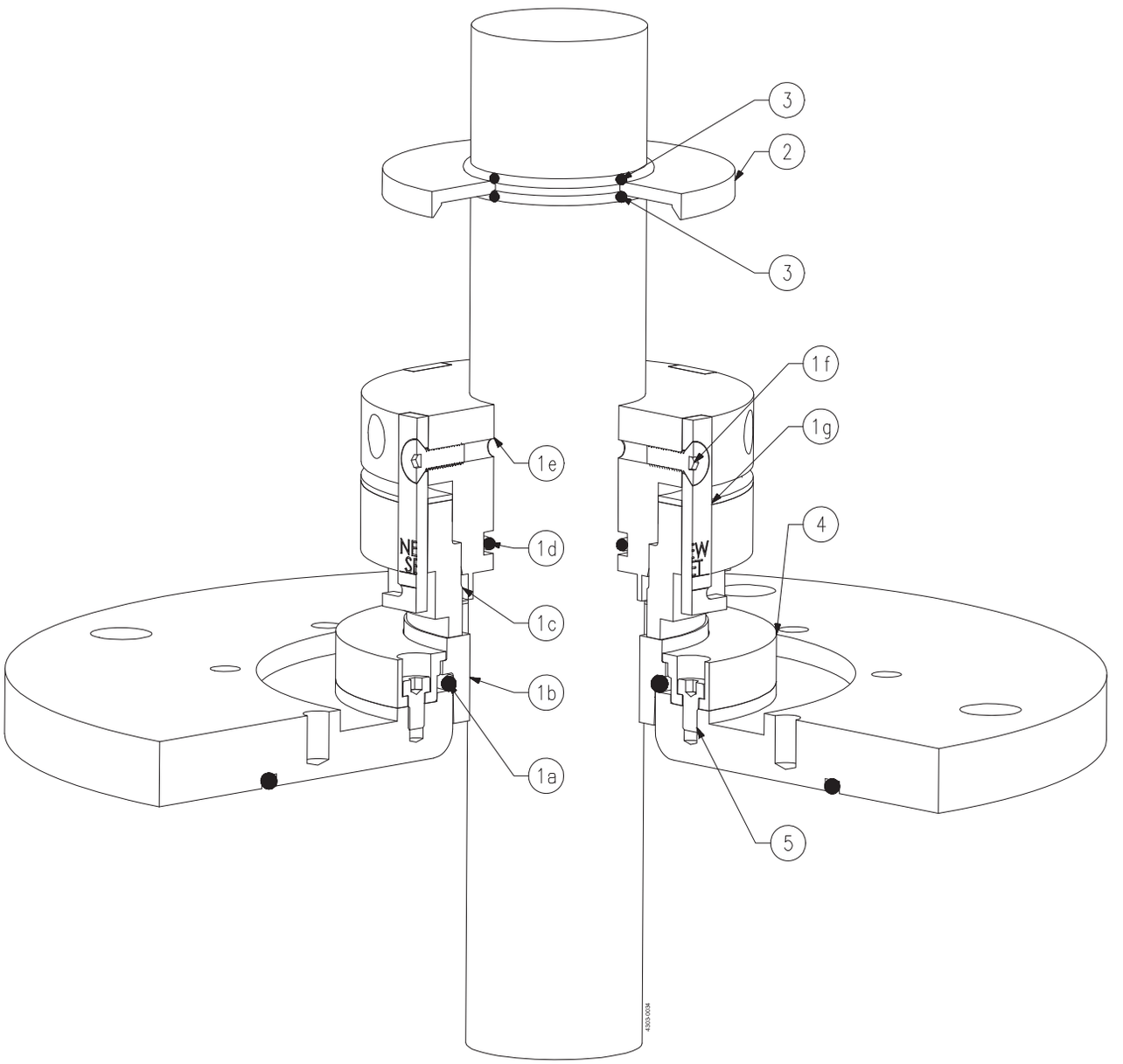
3
2
3
1f
1g
1e
4
1d
1c
1b
1a
5

Pos		Qty	Denomination	size: Ø30	size: Ø35	size: Ø40	size: Ø45
1	□	1	S seal, C/SiC*, EPDM	TE2602000114	TE2602000105	TE2602000073	TE2602000183
	◆	1	S seal, C/SiC*, FPM	TE2602000176	TE2602000111	TE2602000097	TE2602000181
2		1	Oil trap				
3	□◆	2	O-ring, FPM	TE2601000287	TE2601000289	TE2601000292	TE2601000293
4		1	Ring, retainer	TE260406156C	TE260405177B	TE260405177B	TE260405346B
5		4	Screw	TE2601000326	TE2601000326	TE2601000326	TE2601000326

*The listed article numbers are for the complete seal. The seal-kit contains only the sliding seal surfaces and elastomers.

	size: Ø30	size: Ø35	size: Ø40	size: Ø45
Seal Kits				
□ **Seal kit, S, C/SiC, EPDM**	**TE2613000040**	**TE2613000041**	**TE2613000042**	**TE2613000043**
◆ **Seal kit, S, C/SiC, FPM**	**TE2613000031**	**TE2613000032**	**TE2613000033**	**TE2613000034**

Pos		Qty	Denomination	size: Ø50	size: Ø60	size: Ø70	size: Ø80
1	□	1	S seal, C/SiC*, EPDM	TE2602000119	TE2602000184	TE2602000206	TE2602000094
	◆	1	S seal, C/SiC*, FPM	TE2602000089	TE2602000088	TE2602000207	TE2602000182
2		1	Oil trap				
3	□◆	2	O-ring, FPM	TE2601000294	TE2601000297	TE2601000039	TE2601000151
4		1	Ring, retainer	TE260405346B	TE260405344A	TE2604076630	TE260405343A
5		4	Screw	TE2601000326	TE2601000326	TE2601000326	TE2601000326

*The listed article numbers are for the complete seal. The seal-kit contains only the sliding seal surfaces and elastomers.

	size: Ø50	size: Ø60	size: Ø70	size: Ø80
Seal Kits				
□ **Seal kit, S, C/SiC, EPDM**	**TE2613000045**	**TE2613000046**	**TE2613000047**	**TE2613000038**
◆ **Seal kit, S, C/SiC, FPM**	**TE2613000035**	**TE2613000036**	**TE2613000037**	**TE2613000048**

Pos		Qty	Denomination	size: Ø90
1	□	1	S seal, C/SiC*, EPDM	TE2602000092
	◆	1	S seal, C/SiC*, FPM	TE2602000211
2		1	Oil trap	
3	□◆	2	O-ring, FPM	TE2601000097
4		1	Ring, retainer	TE260405635A
5		4	Screw	TE2601000326

*The listed article numbers are for the complete seal. The seal-kit contains only the sliding seal surfaces and elastomers.

	size: Ø90
Seal Kits	
□ **Seal kit, S, C/SiC, EPDM**	**TE2613000049**
◆ **Seal kit, S, C/SiC, FPM**	**TE2613000039**

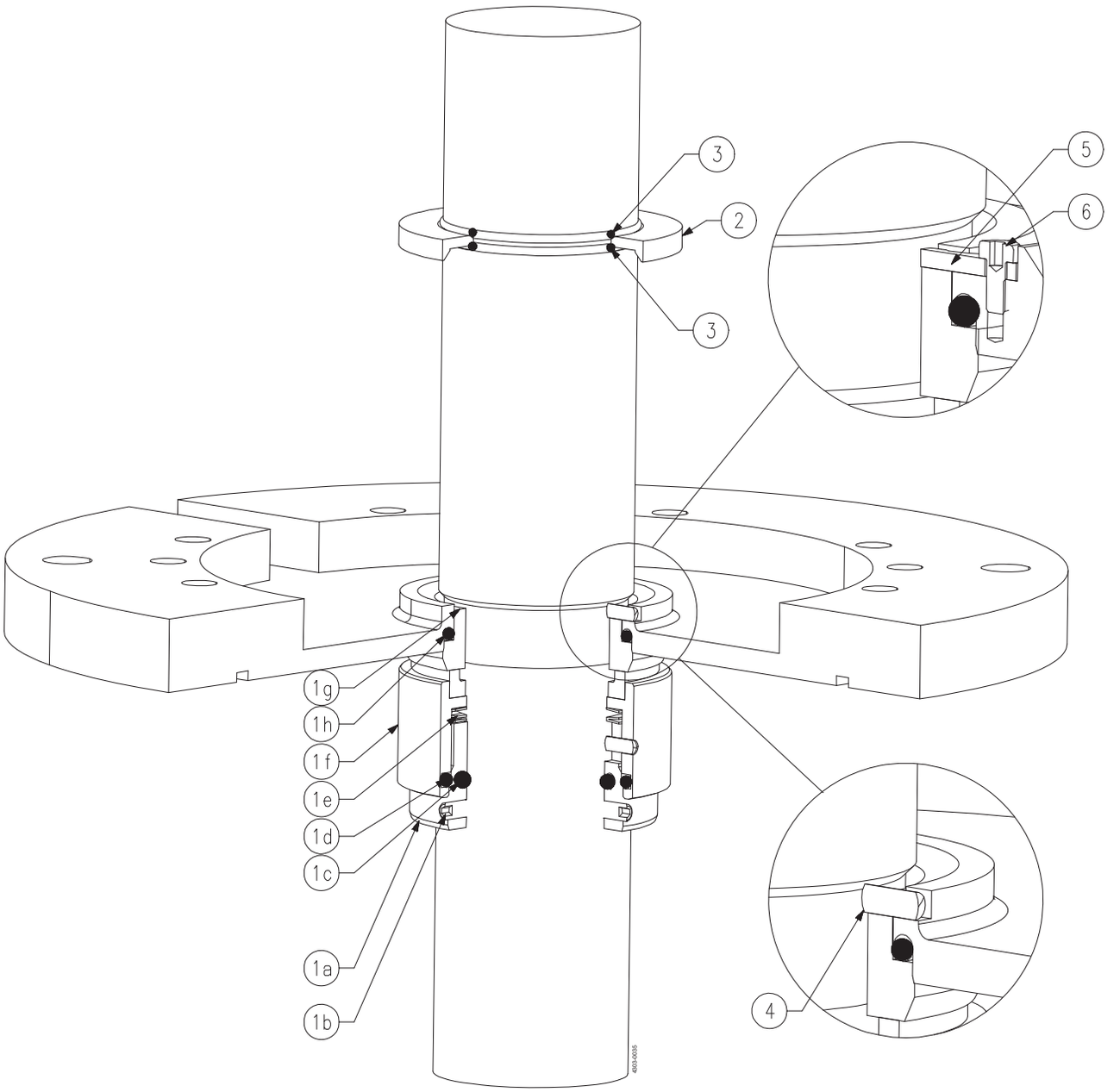
3
2
3
5
6
1g
1h
1f
1e
1d
1c
1a
1b
4
400-0035

Pos		Qty	Denomination	size: Ø30	size: Ø35	size: Ø40	size: Ø45
1	□	1	S3 seal, C/SiC, EPDM	TE2608000017	TE2608000010	TE2608000024	TE2608000026
	◆	1	S3 seal, C/SiC, FPM	TE2608000018	TE2608000013	TE2608000003	TE2608000027
2		1	Oil trap				
		1	Oil trap, (BC160/35)				
3	□◆	2	O-ring, FPM	TE2601000287	TE2601000289	TE2601000292	TE2601000293
4		1	Locking pin	TE2601000428	TE2601000428	TE2601000428	TE2601000428
5		1	Locking plate	TE2604089540	TE2604089540	TE2604089540	TE2604089540
6		1	Screw	TE2601000572	TE2601000572	TE2601000572	TE2601000572

		size: Ø30	size: Ø35	size: Ø40	size: Ø45
Seal Kits					
□	**Seal Kit, S3, C/SiC, EPDM**	**TE2613000087**	**TE2613000076**	**TE2613000091**	**TE2613000093**
◆	**Seal Kit, S3, C/SiC, FPM**	**TE2613000104**	**TE2613000106**	**TE2613000107**	**TE2613000108**

Pos		Qty	Denomination	size: Ø50	size: Ø55	size: Ø60	size: Ø65
1	□	1	S3 seal, C/SiC, EPDM	TE2608000028	TE2608000031	TE2608000030	TE2608000034
	◆	1	S3 seal, C/SiC, FPM	TE2608000029	TE2608000032	TE2608000033	TE2608000060
2		1	Oil trap				
3	□◆	2	O-ring, FPM	TE2601000294	TE2601000295	TE2601000297	TE2601000059
4		1	Locking pin	TE2601000428	TE2601000428	TE2601000428	TE2601000428
5		1	Locking plate	TE2604089540	TE2604089540	TE2604089540	TE2604089540
6		1	Screw	TE2601000572	TE2601000572	TE2601000572	TE2601000572

		size: Ø50	size: Ø55	size: Ø60	size: Ø65
Seal Kits					
□	**Seal Kit, S3, C/SiC, EPDM**	**TE2613000095**	**TE2613000096**	**TE2613000098**	**TE2613000099**
◆	**Seal Kit, S3, C/SiC, FPM**	**TE2613000109**	**TE2613000110**	**TE2613000112**	**TE2613000113**

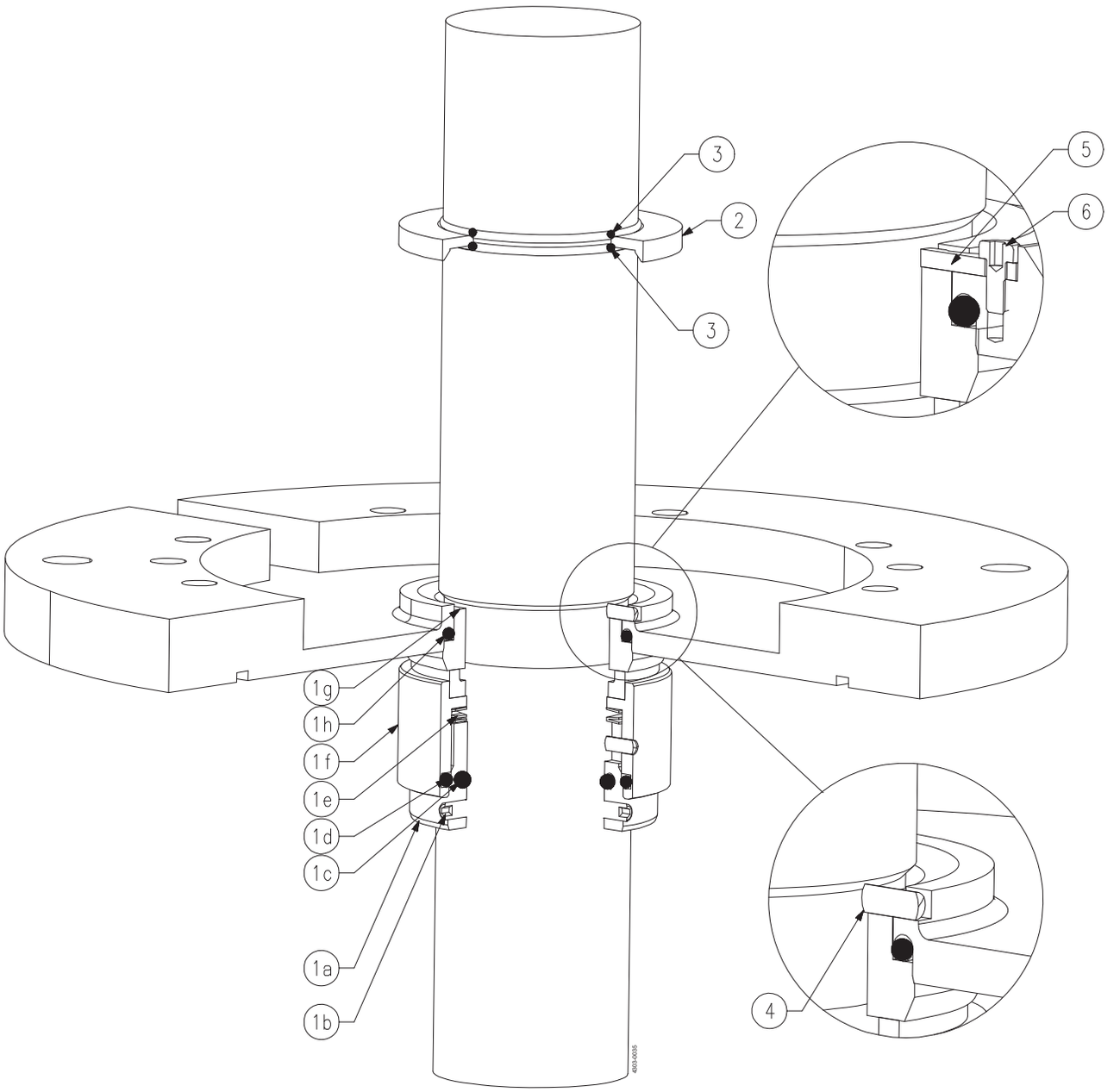
3
2
3
5
6
1g
1h
1f
1e
1d
1c
1a
1b
4
400-0035

Pos		Qty	Denomination	size: Ø70	size: Ø75	size: Ø80	size: Ø90
1	□	1	S3 seal,, C/SiC, EPDM	TE2608000036	TE2608000038	TE2608000040	TE2608000044
	◆	1	S3 seal, C/SiC, FPM	TE2608000037	TE2608000039	TE2608000041	TE2608000045
2		1	Oil trap				
3	□◆	2	O-ring, FPM	TE2601000039	TE2601000403	TE2601000151	TE2601000097
4		1	Locking pin	TE2601000428	TE2601000428	TE2601000428	TE2601000428
5		1	Locking plate	TE2604089540	TE2604089540	TE2604089540	TE2604089540
6		1	Screw	TE2601000572	TE2601000572	TE2601000572	TE2601000572

		size: Ø70	size: Ø75	size: Ø80	size: Ø90
Seal Kits					
□	**Seal Kit, S3, C/SiC, EPDM**	**TE2613000100**	**TE2613000101**	**TE2613000102**	**TE2613000103**
◆	**Seal Kit, S3, C/SiC, FPM**	**TE2613000116**	**TE2613000117**	**TE2613000118**	**TE2613000120**

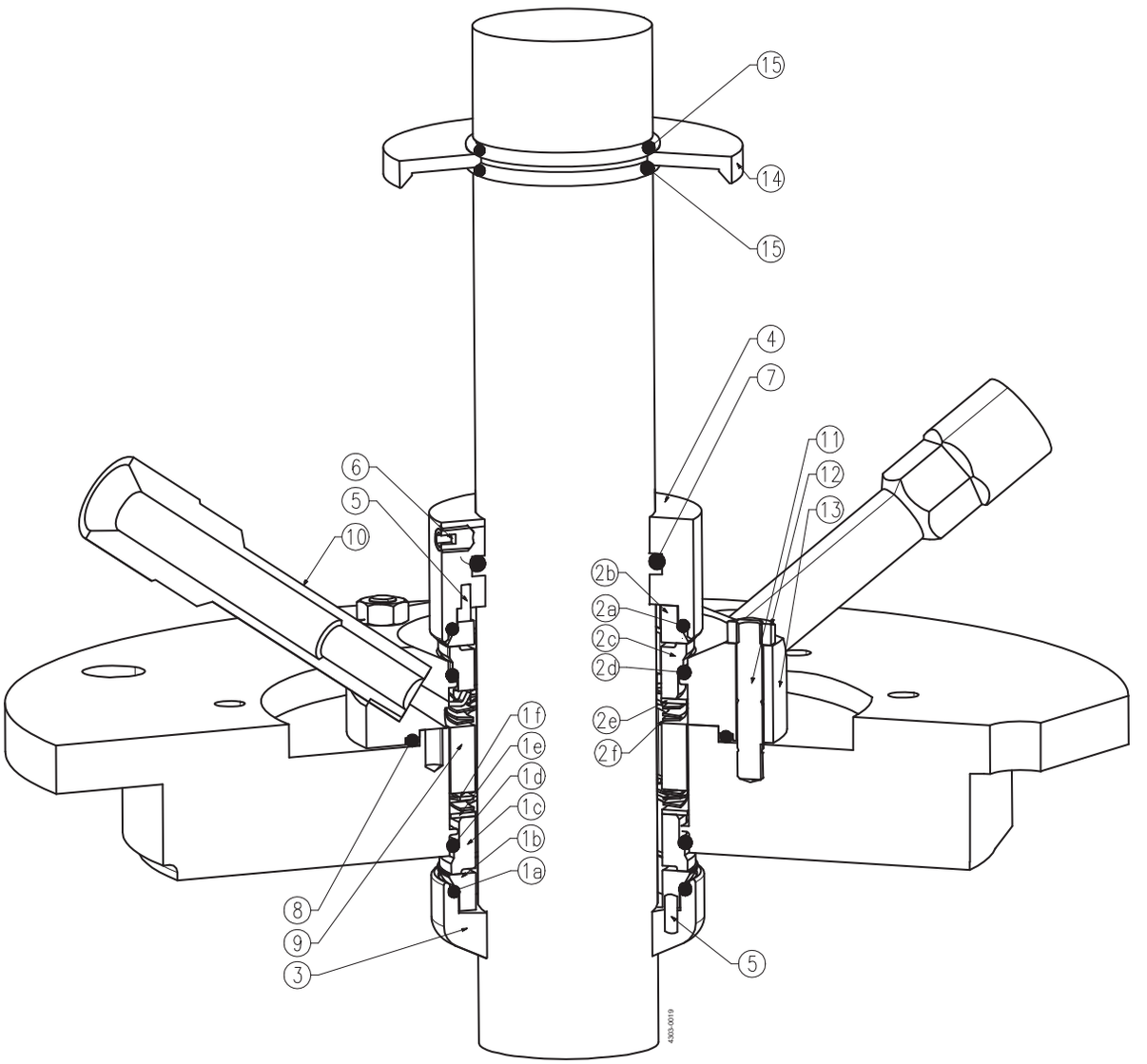
15
14
15
4
7
11
12
13
6
5
10
2b
2a
2c
2d
2e
2f
1f
1e
1d
1c
1b
1a
8
9
3
5
4303.0019

Pos		Qty	Denomination	size: Ø30	size: Ø40
1	♦	1	Seal, C/SiC, EPDM	TE2608041570	TE2608012850
	★	1	Seal, SiC/SiC, EPDM	TE2608037220	TE2608045750
	□	1	Seal, C/SiC, FPM	TE2608058650	TE2608084680
	○	1	Seal, SiC/SiC, FPM	TE2608049740	TE2608049390
2	♦★	1	Seal, C/SiC, EPDM	TE2608041570	TE2608012850
	□○	1	Seal, C/SiC, FPM	TE2608058650	TE2608084680
3		1	Ring, counter**		
4		1	Ring, counter		
5		4	Pin		
6		1	Screw, pointed		
7	□○	1	O-ring, FPM	TE2601000411	TE2601000040
	♦★	1	O-ring, EPDM	TE2601000001	TE2601000424
8	□○	1	O-ring, FPM	TE2601000450	TE2601000403
	♦★	1	O-ring, EPDM	TE2601000387	TE2601000392
9		1	Spacer, (15mm)		
		1	Spacer, (14mm)		
		1	Spacer, (1mm)		
10		2	Flush, connection 1/2"-14 BSP		
11		4	Stud		
12		4	Nut		
13		1	Seal housing		
14		1	Oil trap		
15	□♦○★	2	O-ring, FPM	TE2601000287	TE2601000292
		2	O-ring, FPM, BF*	8010019106	

**Welded onto shaft - maintenance must be carried out by Alfa Laval.

		Ø30	Ø40
Seal kits			
□	**Seal Kit, D, C/SiC-C/SiC, FPM**	**TE2613000121**	**TE2613000122**
□	**Seal Kit, D, C/SiC-C/SiC, FPM, BF***	**8010022656**	
♦	**Seal Kit, D, C/SiC-C/SiC, EPDM**	**TE2613000123**	**TE2613000124**
♦	**Seal Kit, D, C/SiC-C/SiC, EPDM, BF***	**8010022657**	
○	**Seal Kit, D, SiC/SiC-C/SiC, FPM**	**TE2613000125**	**TE2613000126**
○	**Seal Kit, D, SiC/SiC-C/SiC, FPM, BF***	**8010022658**	
★	**Seal Kit, D, SiC/SiC-C/SiC, EPDM**	**TE2613000127**	**TE2613000128**
★	**Seal Kit, D, SiC/SiC-C/SiC, EPDM, BF***	**8010022659**	

* For Agitators with Bearing Frame

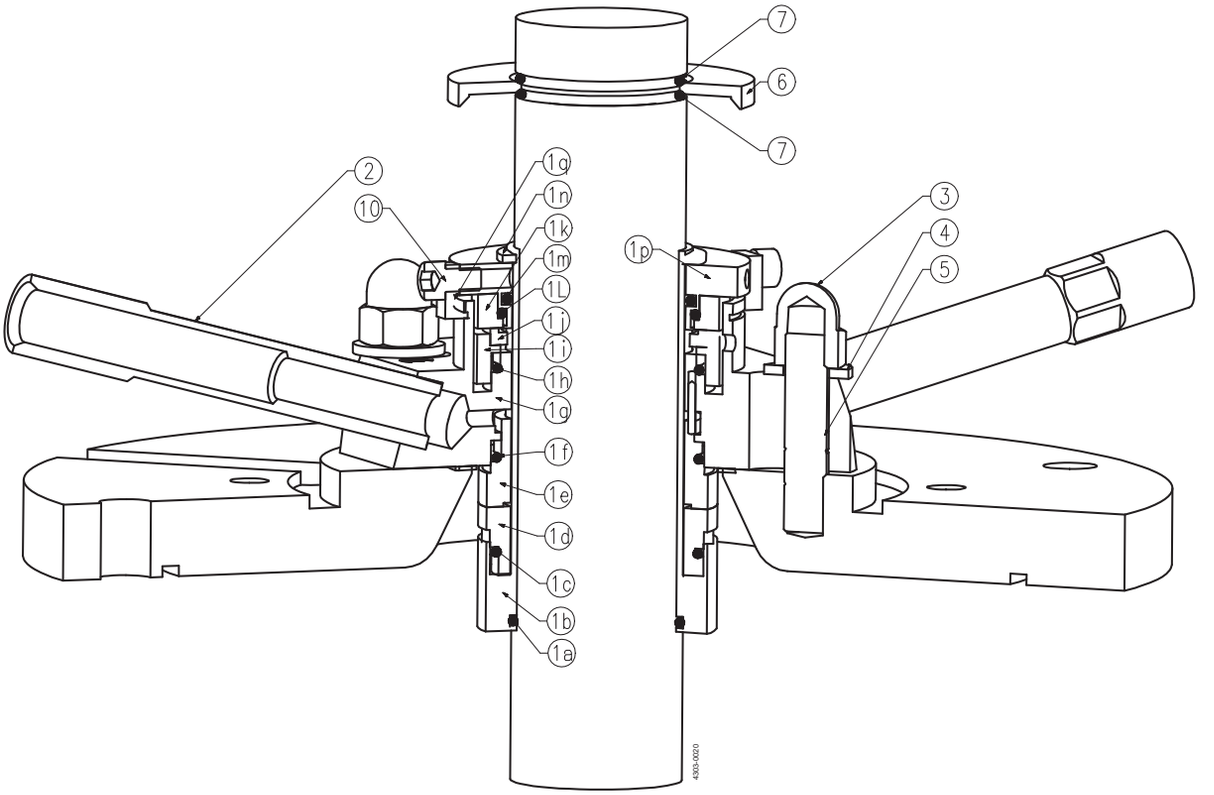
7
6
7
2
10
1q
1n
1k
1m
1L
1j
1i
1h
1g
1f
1e
1d
1c
1b
1a
1p
3
4
5
4303-0020

Pos		Qty	Denomination	size: Ø30	size: Ø35	size: Ø40	size: Ø45
1	□	1	DC seal, C/SiC-C/SiC, EPDM	TE2602000224	TE2602000236	TE2602000091	TE2602000075
	♦	1	DC seal, C/SiC-C/SiC, FPM	TE2602000228	TE2602000239	TE2602000242	TE2602000203
	○	1	DC seal, SiC/SiC-C/SiC, EPDM	TE2602000225	TE2602000237	TE2602000241	TE2602000244
	★	1	DC seal, SiC/SiC-C/SiC, FPM	TE2602000229	TE2602000240	TE2602000243	TE2602000247
2		2	Flush, connection 1/2"-14 BSP	TE2602029060	TE2602029060	TE2602055590	TE2602055590
3		4	Cap nut, M10	TE2601000195	TE2601000195		
		4	Cap nut, M12		TE2601000261	TE2601000261	TE2601000261
4		4	Washer, M10	TE2601000346	TE2601000346		
		4	Washer, M12		TE2601000347	TE2601000347	TE2601000347
5		4	Stud, M10	TE2601000308	TE2601000308		
		4	Stud, M12		TE2601000593	TE2601000593	TE2601000593
6		1	Oil trap	TE2604061570	TE2604059350	TE2604055860	TE2604040440
7	□♦○★	2	O-ring, FPM	TE2601000287	TE2601000289	TE2601000292	TE2601000293

	size: Ø30	size: Ø35	size: Ø40	size: Ø45
Seal kits				
□ Seal Kit, DC, C/SiC-C/SiC, EPDM	TE2613000137	TE2613000138	TE2613000139	TE2613000140
♦ Seal Kit, DC, C/SiC-C/SiC, FPM	TE2613000144	TE2613000145	TE2613000146	TE2613000147
○ Seal Kit, DC, SiC/SiC-C/SiC, EPDM	TE2613000151	TE2613000152	TE2613000153	TE2613000154
★ Seal Kit, DC, SiC/SiC-C/SiC, FPM	TE2613000158	TE2613000159	TE2613000160	TE2613000161

Pos		Qty	Denomination	size: Ø50	size: Ø55	size: Ø60	size: Ø70
1	□	1	DC seal, C/SiC-C/SiC, EPD	TE2602000189	TE2602000251	TE2602000257	TE2602000272
	♦	1	DC seal, C/SiC-C/SiC, FPM	TE2602000249	TE2602000255	TE2602000260	TE2602000276
	○	1	DC seal, SiC/SiC-C/SiC, EPD	TE2602000248	TE2602000252	TE2602000202	TE2602000273
	★	1	DC seal, SiC/SiC-C/SiC, FPM	TE2602000250	TE2602000256	TE2602000261	TE2602000277
2		2	Flush, connection 1/2"-14 BSP	TE2602055590	TE2602055590	TE2602055590	TE2602055590
3		4	Cap nut, M12	TE2601000261	TE2601000261	TE2601000261	TE2601000261
4		4	Washer, M12	TE2601000347			
		4	Washer, special		TE2607014100	TE2607014100	TE2607014100
5		4	Stud, M12	TE2601000593	TE2601000593	TE2601000593	TE2601000593
6		1	Oil trap	TE2604039770	TE2604034420	TE2604053450	TE2604076710
7	□♦○★	2	O-ring, FPM	TE2601000294	TE2601000295	TE2601000297	TE2601000039

	size: Ø50	size: Ø55	size: Ø60	size: Ø70
Seal kits				
□ Seal Kit, DC, C/SiC-C/SiC, EPDM	TE2613000141	TE2613000142	TE2613000143	9615478601
♦ Seal Kit, DC, C/SiC-C/SiC, FPM	TE2613000148	TE2613000149	TE2613000150	9615478701
○ Seal Kit, DC, SiC/SiC-C/SiC, EPDM	TE2613000155	TE2613000156	TE2613000157	9615478801
★ Seal Kit, DC, SiC/SiC-C/SiC, FPM	TE2613000162	TE2613000163	TE2613000164	9615478901

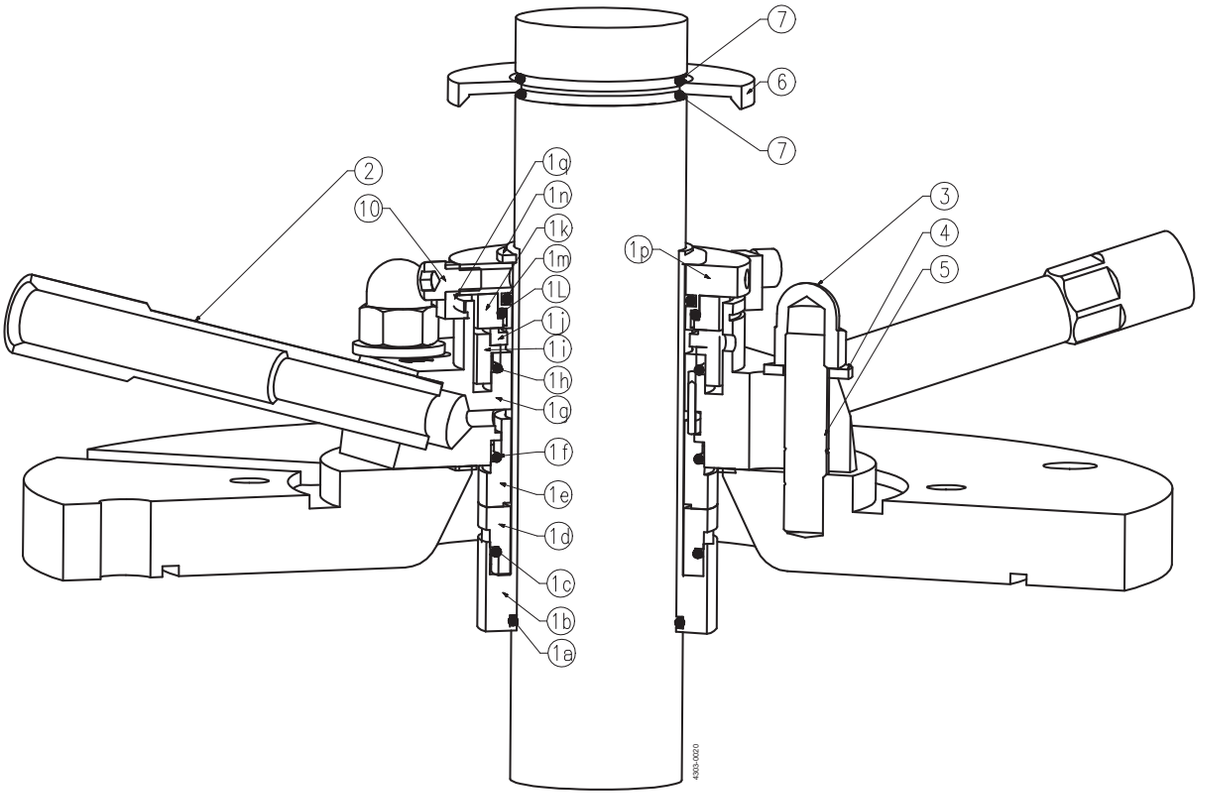
7
6
7
2
10
1q
1n
1k
1m
1L
1j
1i
1h
1g
1f
1e
1d
1c
1b
1a
1p
3
4
5
4303-0020

Pos		Qty	Denomination	size: Ø80	size: Ø90
1	□	1	DC seal, C/SiC-C/SiC, EPDM	TE2602000284	TE2602000336
	♦	1	DC seal, C/SiC-C/SiC, FPM	TE2602000288	TE2602000338
	○	1	DC seal, SiC/SiC-C/SiC, EPDM	TE2602000285	TE2602000337
	★	1	DC seal, SiC/SiC-C/SiC, FPM	TE2602000289	TE2602000339
2		2	Flush, connection 1/2"-14 BSP	TE2602055590	TE2602055590
3		4	Cap nut, M12	TE2601000261	
		4	Cap nut, M16		TE2601000058
4		4	Washer, M16		TE2601000348
		4	Washer, Special	TE2607014100	
5		4	Stud, M12	TE2601000578	
		4	Stud, M16		TE2601000058
6		1	Oil trap	TE2604034400	TE2604034390
7	□♦○★	2	O-ring, FPM	TE2601000151	TE2601000097

	size: Ø80	size: Ø90
Seal kits		
□ Seal Kit, DC, C/SiC-C/SiC, EPDM	9615479001	9615479401
♦ Seal Kit, DC, C/SiC-C/SiC, FPM	9615479101	9615479501
○ Seal Kit, DC, SiC/SiC-C/SiC, EPDM	9615479201	9615479601
★ Seal Kit, DC, SiC/SiC-C/SiC, FPM	9615479301	9615479701

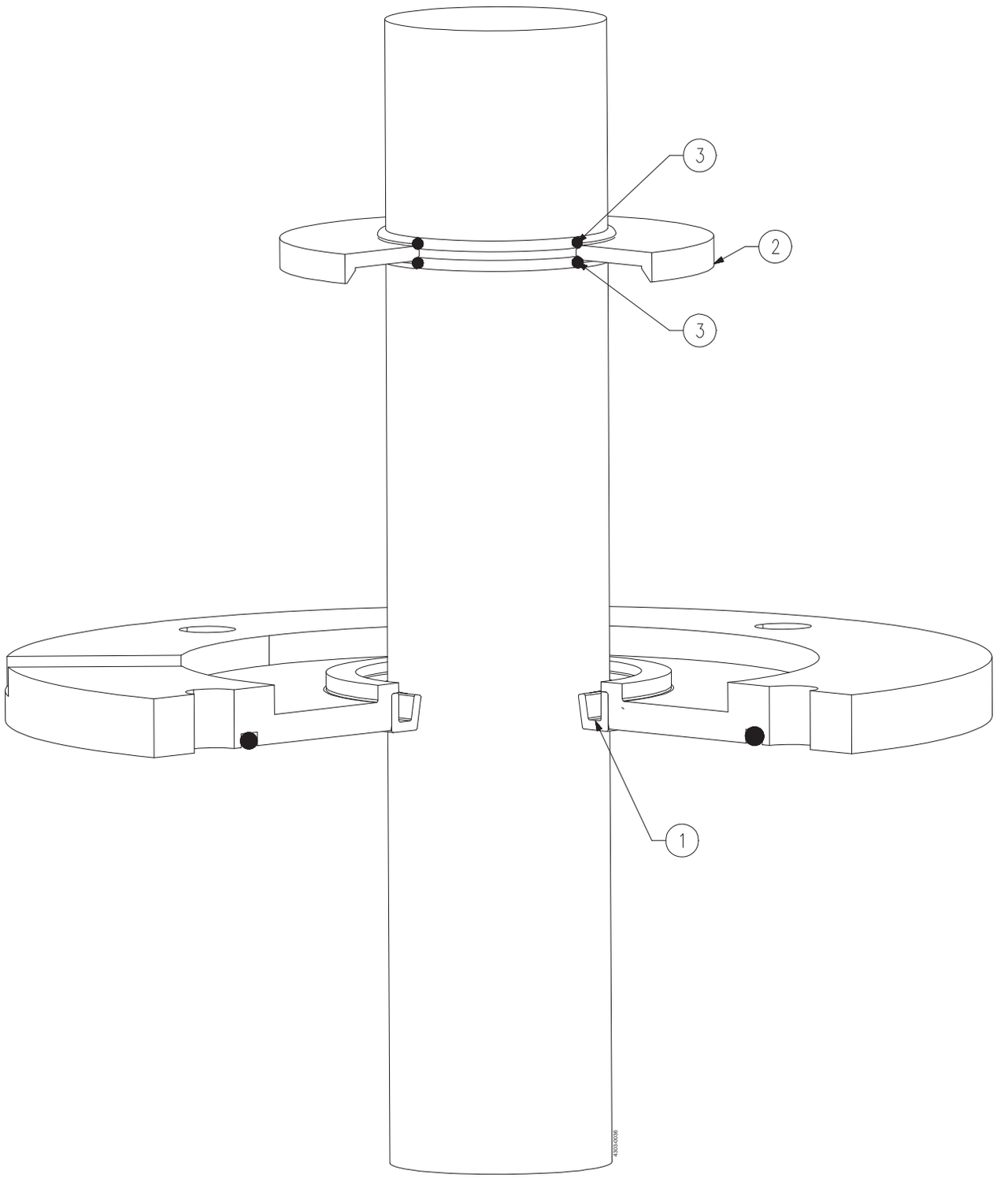
3
2
3
1
4320-0098

Pos		Qty	Denomination	size: Ø20	size: Ø25	size: Ø30	size: Ø35
1	□	1	Radial seal, FPM	TE2601000560	TE2601000592	TE2601000318	
	□	1	Radial seal, FPM (Ø35xØ62x7)				TE2601000227
	♦	1	Radial seal, FPM (Ø35xØ47x7)				TE2601000319
2		1	Oil trap				
3	□♦	2	O-ring, FPM	TE2601000561	TE2601000281	TE2601000287	TE2601000289

	size: Ø20	size: Ø25	size: Ø30	size: Ø35

Seal kits

		size: Ø20	size: Ø25	size: Ø30	size: Ø35
□	Seal Kit, Radial, FPM	TE2613000001	TE2613000002	TE2613000003	TE2613000004
♦	Seal Kit, Radial, FPM				TE2613000190

Pos		Qty	Denomination	size: Ø40	size: Ø45	size: Ø50	size: Ø55
1	□	1	Radial seal, FPM				TE2601000324
	□	1	Radial seal, FPM (Ø40xØ72x7)	TE2601000080			
	♦	1	Radial seal, FPM (Ø40xØ62x7)	TE2601000321			
	□	1	Radial seal, FPM (Ø45xØ72x7)		TE2601000380		
	♦	1	Radial seal, FPM (Ø45xØ62x7)		TE2601000322		
	□	1	Radial seal, FPM (Ø50xØ72x7)			TE2601000323	
	♦	1	Radial seal, FPM (Ø50xØ62x7)			TE2601000359	
2		1	Oil trap				
3	□♦	2	O-ring, FPM	TE2601000292	TE2601000293	TE2601000294	TE2601000295

	size: Ø40	size: Ø45	size: Ø50	size: Ø55

Seal kits

		size: Ø40	size: Ø45	size: Ø50	size: Ø55
□	Seal Kit, Radial, FPM	TE2613000005	TE2613000006	TE2613000194	TE2613000008
♦	Seal Kit, Radial, FPM	TE2613000192	TE2613000193	TE2613000007	

Pos		Qty	Denomination	size: Ø60	size: Ø65	size: Ø70	size: Ø75
1	□	1	Radial seal, FPM	TE2601000325	TE2601000036	TE2601000161	TE2601000573
2		1	Oil trap				
3	□	2	O-ring, FPM	TE2601000297	TE2601000059	TE2601000039	TE2601000403

	size: Ø60	size: Ø65	size: Ø70	size: Ø75

Seal kits

		size: Ø60	size: Ø65	size: Ø70	size: Ø75
□	Seal Kit, Radial, FPM	TE2613000009	TE2613000010	TE2613000011	TE2613000012

Pos		Qty	Denomination	size: Ø80	size: Ø90
1	□	1	Radial seal, FPM	TE2601000170	TE2601000009
2		1	Oil trap		
3	□	2	O-ring, FPM	TE2601000151	TE2601000097

	size: Ø80	size: Ø90

Seal kits

		size: Ø80	size: Ø90
□	Seal Kit, Radial, FPM	TE2613000013	TE2613000014

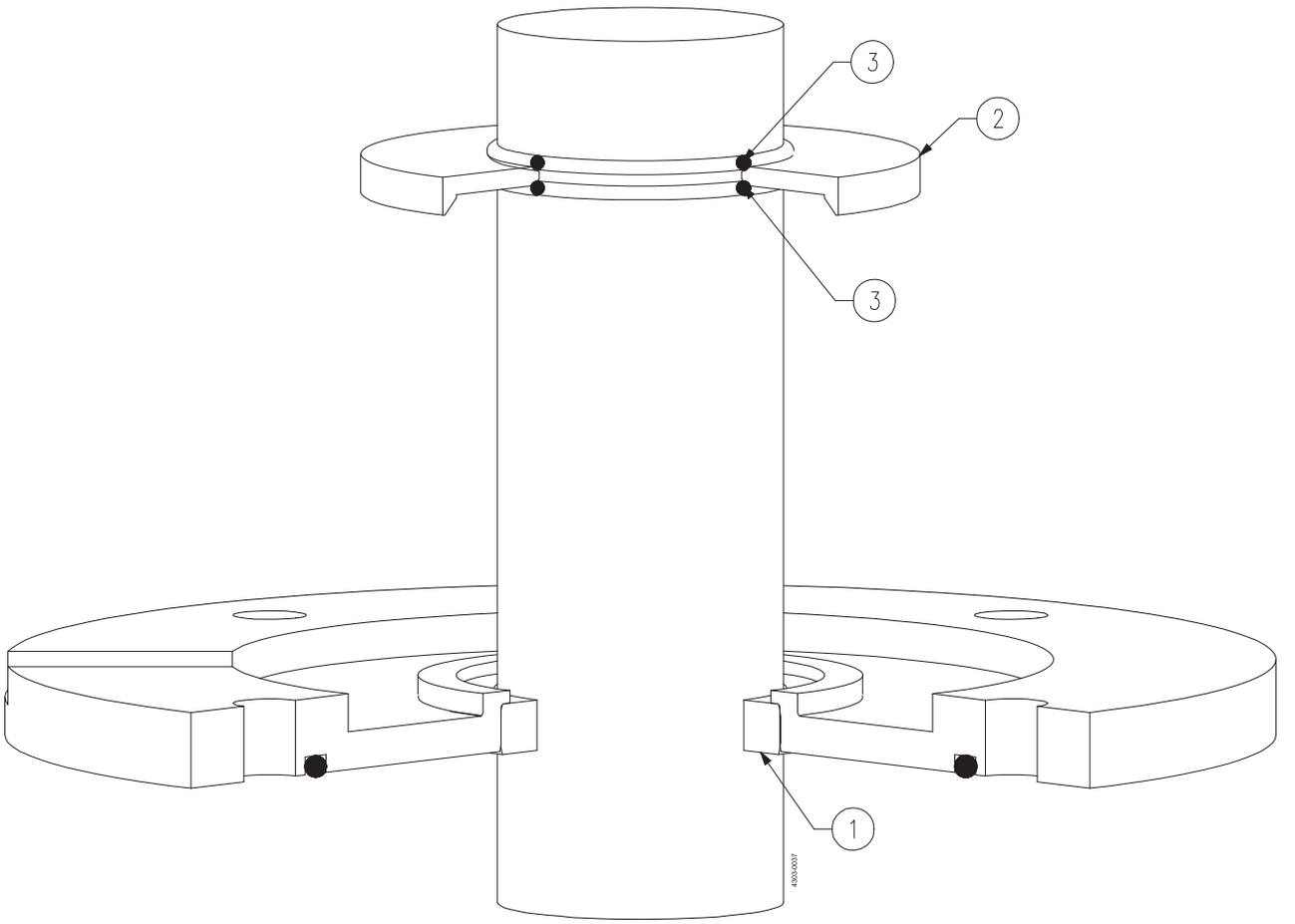
3
2
3
1
4303-0037

Pos		Qty	Denomination	size: Ø20	size: Ø25	size: Ø30	size: Ø35
1	□	1	Gab seal, PTFE	TE2607049240	TE2607049250	TE2607078250	
	□	1	Gab seal, PTFE(Ø62,50xØ36x8)				TE2607078430
	♦	1	Gab seal, PTFE (Ø47,50xØ36x8)				TE2607047220
2		1	Oil trap				
3	□♦	2	O-ring, FPM	TE2601000561	TE2601000281	TE2601000287	TE2601000289

	size: Ø20	size: Ø25	size: Ø30	size: Ø35
Seal kits				
□ **Seal Kit, Gap, PTFE**	**TE2613000015**	**TE2613000016**	**TE2613000017**	**TE2613000018**
♦ **Seal Kit, Gap, PTFE**				**TE2613000195**

Pos		Qty	Denomination	size: Ø40	size: Ø45	size: Ø50	size: Ø55
1	□	1	Gab seal, PTFE				TE2607070460
	□	1	Gab seal, PTFE (Ø72,50xØ41x8)	TE2607078270			
	♦	1	Gab seal, PTFE (Ø62,50xØ41x8)	TE2607078440			
	□	1	Gab seal, PTFE (Ø72,50xØ46x8)		TE2607078280		
	♦	1	Gab seal, PTFE (Ø62,50xØ46x8)		TE2607078450		
	□	1	Gab seal, PTFE (Ø72,50xØ51x8)			TE2607078460	
	♦	1	Gab seal, PTFE (Ø62,50xØ51x8)			TE2607078290	
2		1	Oil trap				
3	□♦	2	O-ring, FPM	TE2601000292	TE2601000293	TE2601000294	TE2601000295

	size: Ø40	size: Ø45	size: Ø50	size: Ø55
Seal kits				
□ **Seal Kit, Gap, PTFE**	**TE2613000019**	**TE2613000020**	**TE2613000198**	**TE2613000022**
♦ **Seal Kit, Gap, PTFE**	**TE2613000196**	**TE2613000197**	**TE2613000021**	

Pos		Qty	Denomination	size: Ø60	size: Ø65	size: Ø70	size: Ø75
1	□	1	Gab seal, PFTE	TE2607078300	TE2607078330	TE2607078340	TE2607049260
2		1	Oil trap				
3	□	2	O-ring, FPM	TE2601000297	TE2601000059	TE2601000039	TE2601000403

	size: Ø60	size: Ø65	size: Ø70	size: Ø75
Seal kits				
□ **Seal Kit, Gap, PTFE**	**TE2613000023**	**TE2613000024**	**TE2613000025**	**TE2613000026**

Pos		Qty	Denomination	size: Ø80	size: Ø90
1	□	1	Gab seal, PTFE	TE2607078360	TE2607078370
2		1	Oil trap		
3	□	2	O-ring, FPM	TE2601000151	TE2601000097

	size: Ø80	size: Ø90
Seal kits		
□ **Seal Kit, Gap, PTFE**	**TE2613000027**	**TE2613000028**

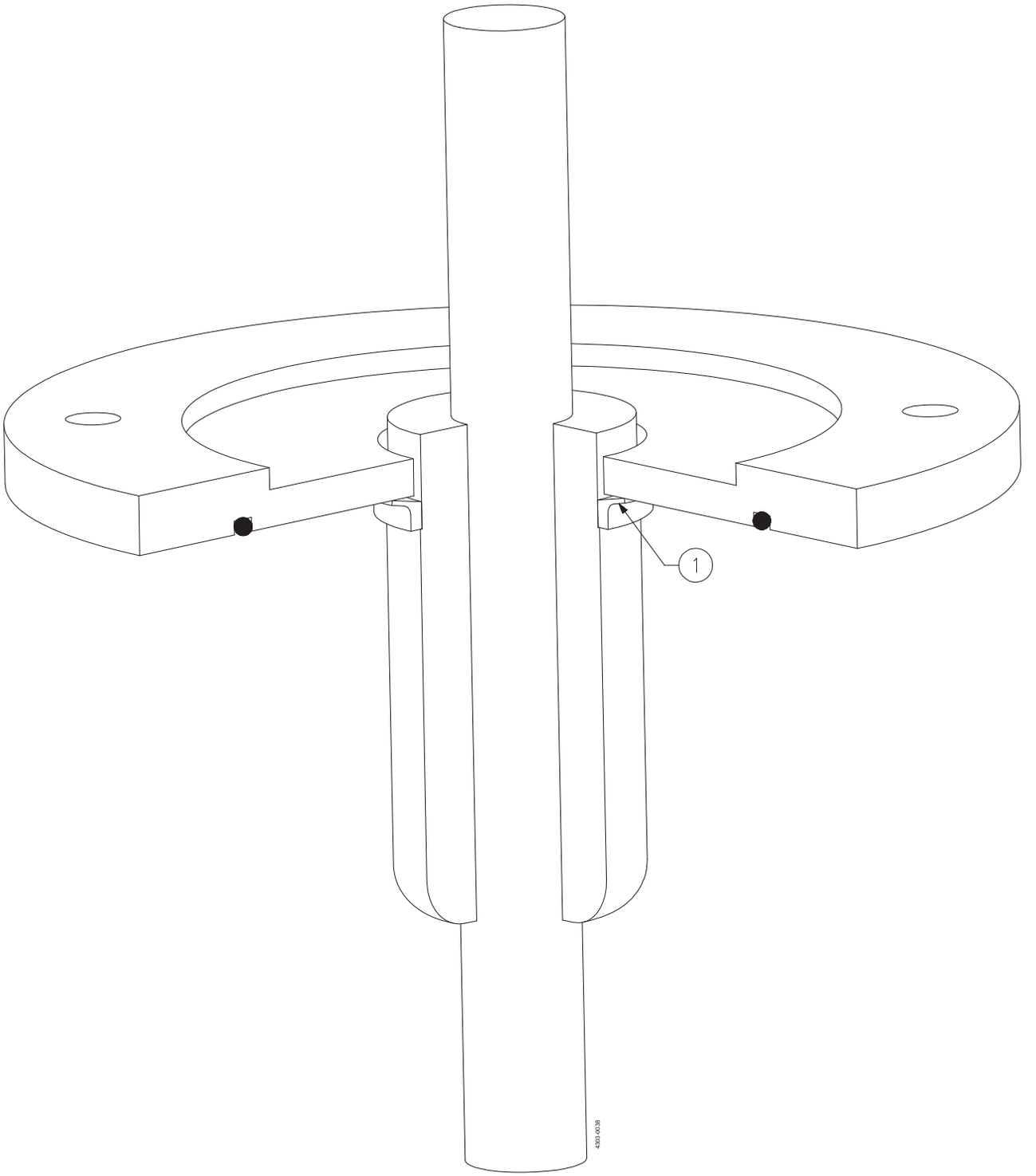
1
4301.0038

Pos	Qty	Denomination	size: Ø20	size: Ø25	size: Ø35
1	1	Lib seal (V), FPM	TE2601000229	TE2601000229	TE2601000363

			size: Ø20	size: Ø25	size: Ø35
Service kits					
		Lip seal (V), FPM	**TE2601000229**	**TE2601000229**	**TE2601000363**

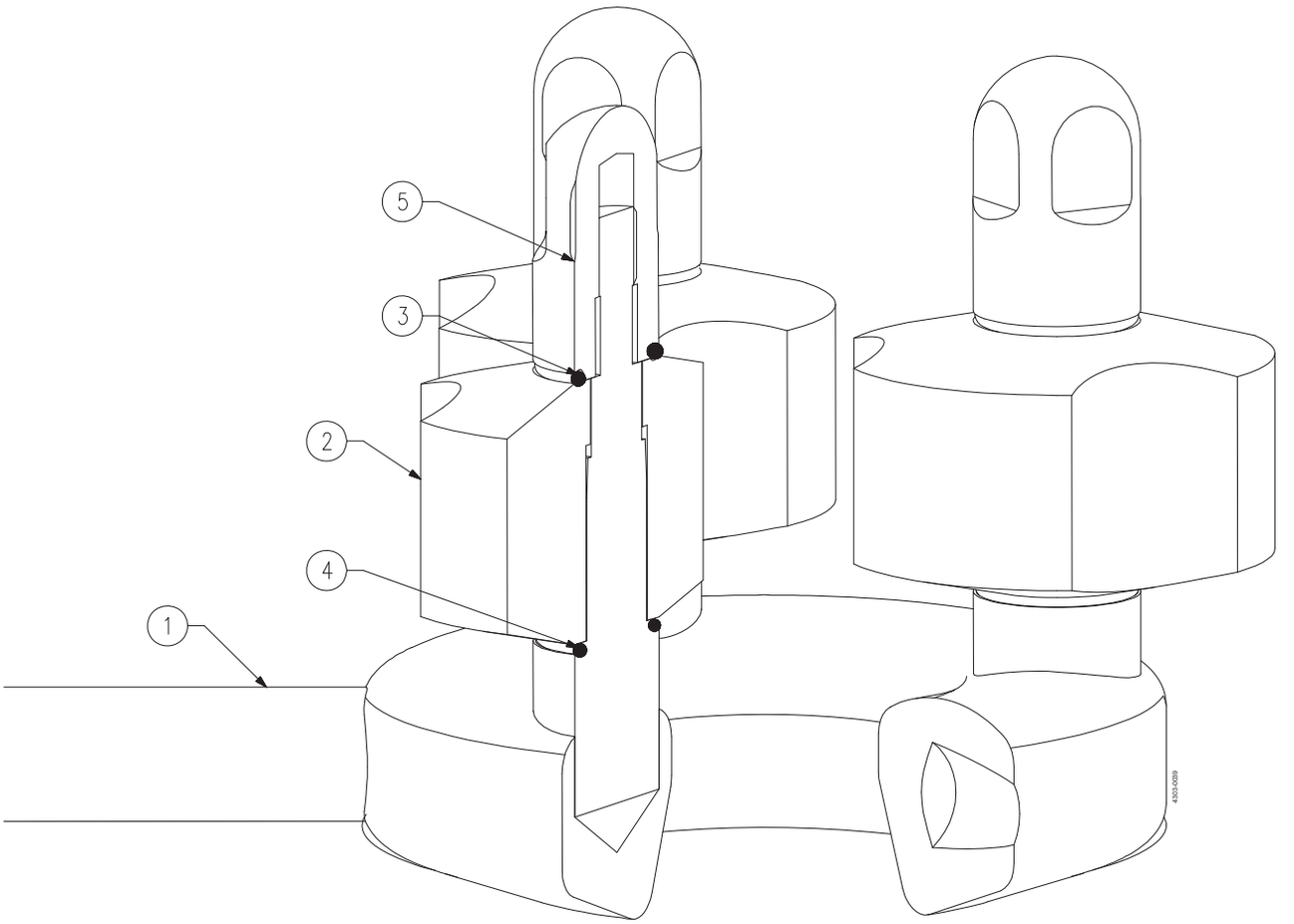
5
3
2
4
1

Pos		Qty	Denomination	size: Ø35/Ø40/Ø50	size: Ø55/Ø65/Ø75	size: Ø60/Ø70/Ø80
1		1	Intermediate steady support	TE26C5079690	TE26C5079730	TE26C5079730
2	□	3	Bushing, PTFE	TE260702671A	TE2607222730	TE2607222850
3	□	3	O-ring, FPM	TE2601000639	TE2601000677	TE2601000677
4	□	3	O-ring, FPM	TE2601000639	TE2601000640	TE2601000640
3	□	3	O-ring, EPDM	TE2601000626	TE2601000676	TE2601000676
4	□	3	O-ring, EPDM	TE2601000626	TE2601000625	TE2601000625
5		3	Nut	TE26C7026860	TE26C7222720	TE26C7222720

		size: Ø35/Ø40/Ø50	size: Ø55/Ø65/Ø75	size: Ø60/Ø70/Ø80
Spare part kits				
□	**Spare part kit, ISB, EPDM/FPM**	**TE2613079680**	**TE2613222920**	**TE2613222930**

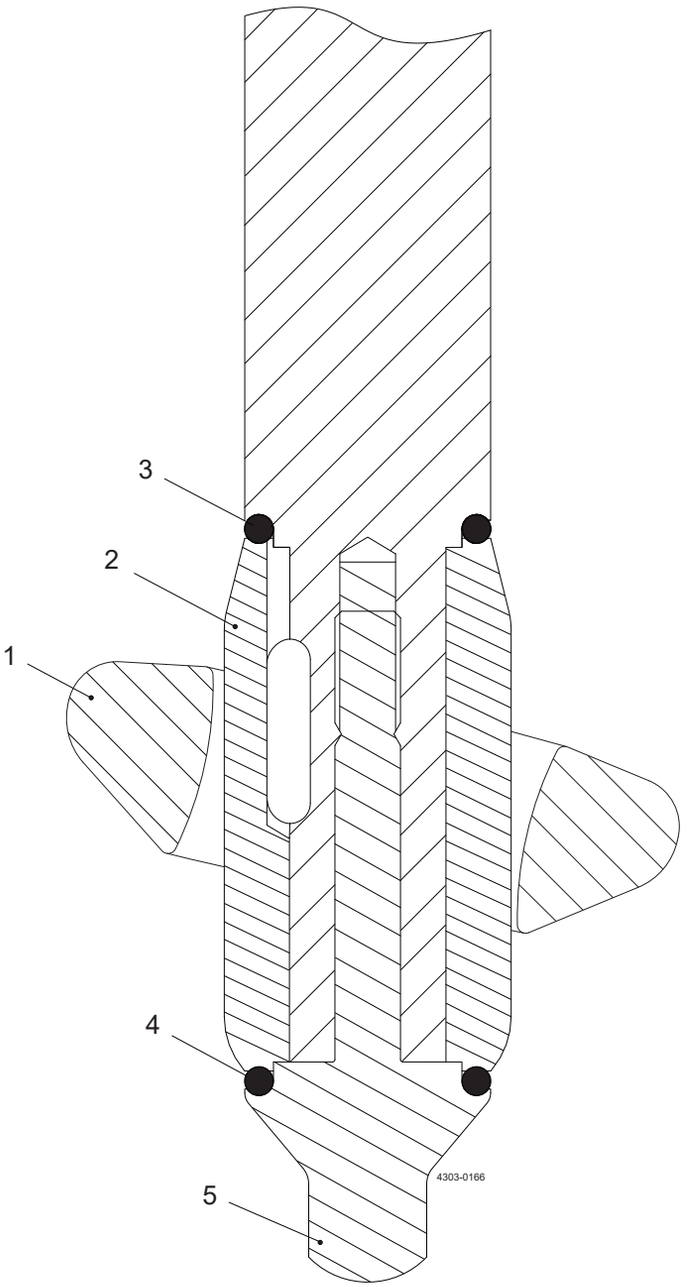
3
2
1
4
5
4303-0166

Pos		Qty	Denomination	size: Ø30/Ø35/ Ø40Ø45	size: Ø50/Ø55/ Ø60/Ø65	size: Ø70/Ø75/ Ø80/Ø90
1		1	Bottom support	9615390801	9615390901	9615391001
2	□◆	1	Bushing, PEEK	9615391101	9615391201	9615391301
3	□	1	O-ring, FPM	9615396101	9615396701	TE2601000654
4	□	1	O-ring, FPM	9615396101	9615396101	9615396101
3	◆	1	O-ring, EPDM	9615396001	9615396601	TE2601000365
4	◆	1	O-ring, EPDM	9615396001	9615396001	9615396001
5		1	Screw	9615391801	9615391801	9615391801

		size: Ø30/Ø35/ Ø40Ø45	size: Ø50/Ø55/ Ø60/Ø65	size: Ø70/Ø75/ Ø80/Ø90
□	**Spare part kit, BS3, FPM**	**9615411604**	**9615411605**	**9615411606**
◆	**Spare part kit, BS3, EPDM**	**9615411601**	**9615411602**	**9615411603**

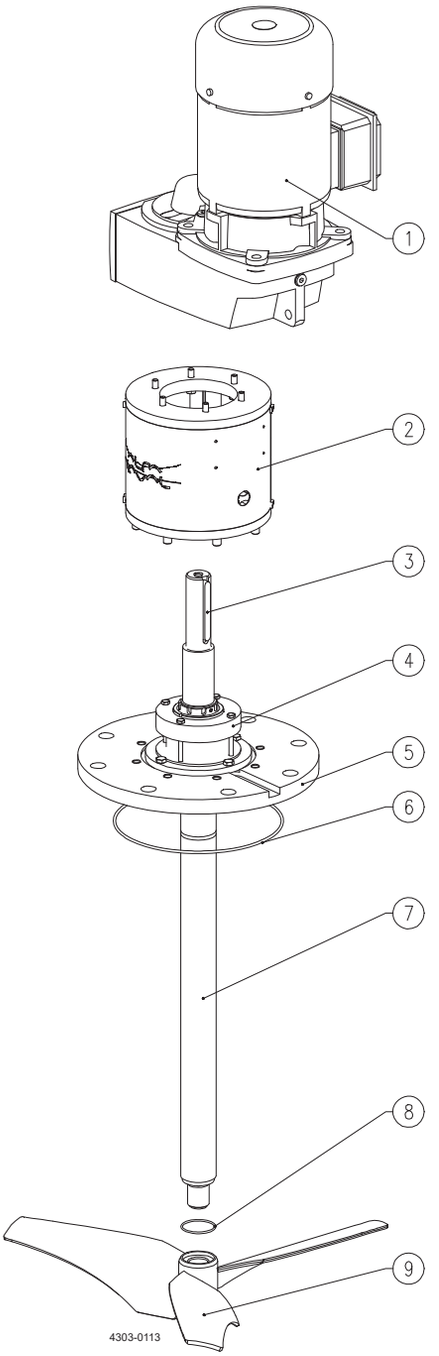
1
2
3
4
5
6
7
8
9
4303-0113

Pos	Qty	Denomination	Impeller Ø550	Impeller Ø600	Impeller Ø650	Impeller Ø700	Impeller Ø750
1	1	GP Gear motor	9615386701	9615365001	9615365101	9615365201	9615365301
2	1	Lantern, complete, [1]					
3	1	Parallel key	TE2601000026	TE2601000026	TE2601000026	TE2601000026	TE2601000028
4	1	Shaft seal, type S3SD, [2]					
5	1	Flange, mounting	9615236701	9615236701	9615236701	9615236701	9615236701
6	1	O-ring (for flange)	TE2601000075	TE2601000075	TE2601000075	TE2601000075	TE2601000075
7	1	Shaft	9615363201	9615363201	9615363201	9615363201	9615363301
8	1	O-ring (for shaft)	TE2601000248	TE2601000248	TE2601000248	TE2601000248	TE2601000248
9	1	Impeller device, EnSaFoil	9615045958	9615045960	9615045624	9615043198	9615045964

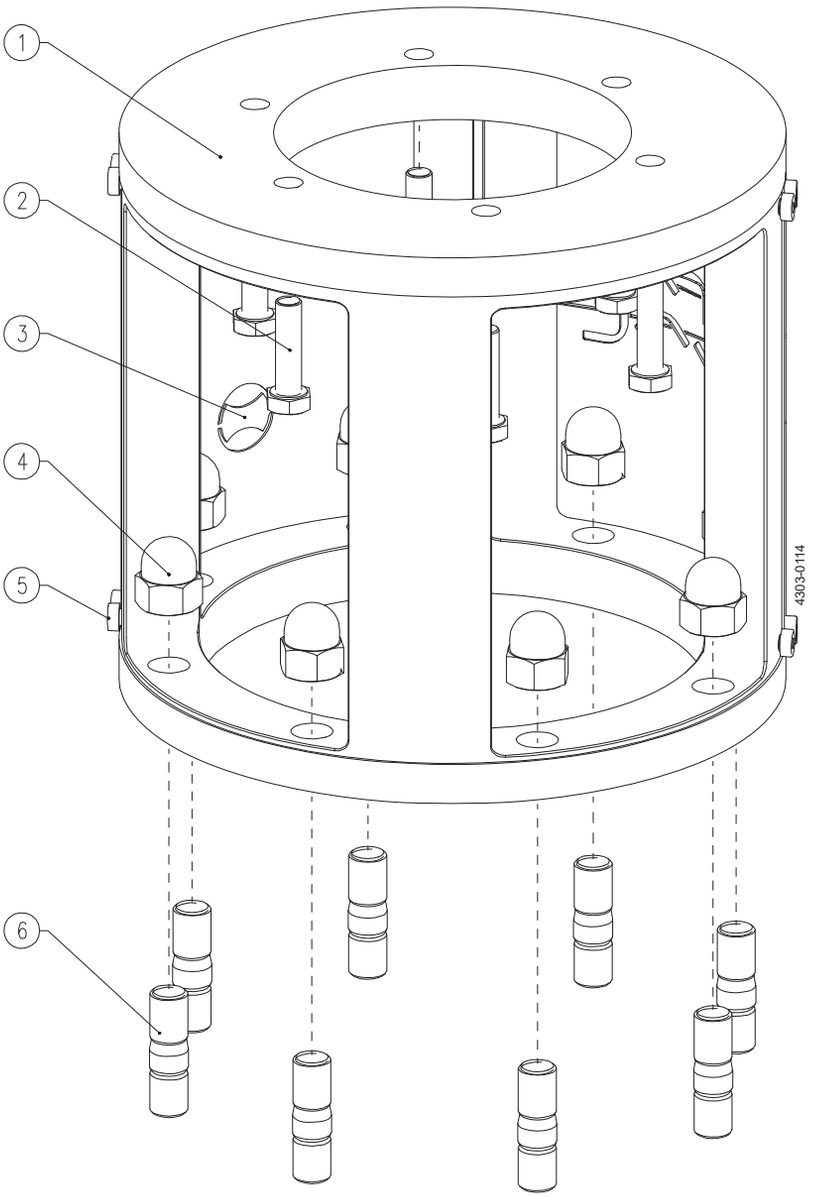
1
2
3
4
5
6
4303-0114

Pos	Qty	Denomination	Impeller Ø550	Impeller Ø600	Impeller Ø650	Impeller Ø700	Impeller Ø750
1	1	Lantern, ext.	9615363501	9615363501	9615363501	9615363501	9615363502
2	6	Screw	TE2601000394	TE2601000394	TE2601000394	TE2601000394	TE2601000390
3	2	Guard, ext.	9615269101	9615269101	9615269101	9615269101	9615269101
4	8	Nut, cap	TE2601000261	TE2601000261	TE2601000261	TE2601000261	TE2601000261
5	8	Screw	TE2601000031	TE2601000031	TE2601000031	TE2601000031	TE2601000031
6	8	Stud	TE2601000309	TE2601000309	TE2601000309	TE2601000309	TE2601000309

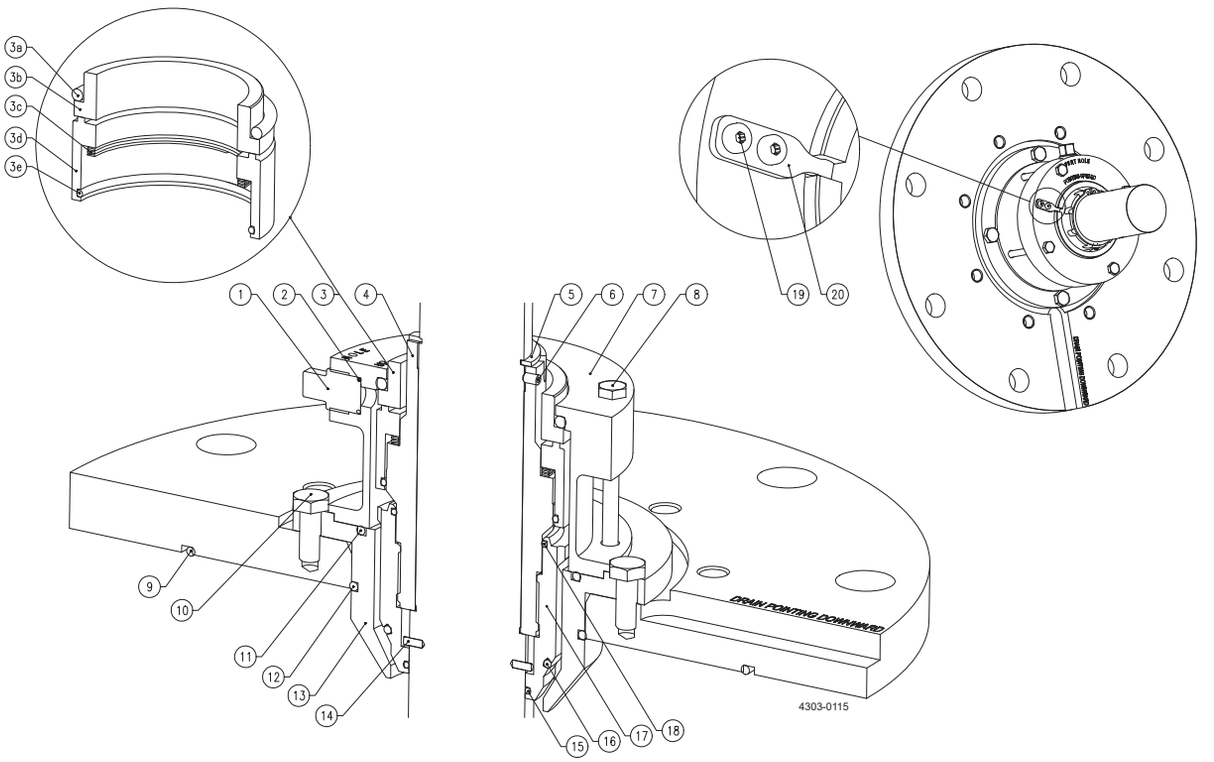
3a
3b
3c
3d
3e
1
2
3
4
5
6
7
8
9
10
11
12
13
14
15
16
17
18
19
20
DRAIN POINTING DOWNWARD
4303-0115

Pos		Qty	Denomination	Item no.
1		1	End Plug	9615269201
2	□♦	1	O-ring, FPM	TE2601000656
3	□♦	1	S3SD Seal, SiC/SiC, FPM	9615365801
4		1	Sleeve, inner	9615236501
5		1	Circlip	TE2601000199
6		1	Screw, pointed	TE2601000062
7		1	Seal housing	9615236301
8		4	Screw	TE2601000657
9	♦	1	O-ring (for flange, mounting)	TE2601000075
10		4	Screw	TE2601000389
11	□♦	1	O-ring, FPM	9615377101
12	♦	1	O-ring, FPM	9615377101
13		1	Flange, support	9615236801
14		2	Locking pin	TE2601000659
15	♦	1	O-ring, FPM	9615377001
16	♦	1	O-ring, FPM	TE2601000654
17		1	Sleeve, outer	9615236401
18	♦	1	O-ring, FPM	TE2601000658
19		2	Screw	TE2601000572
20		1	Plate, retainer S3SD	9615384601

		Item no.
Seal Kits for shaft seal, type S3SD		
□	**Seal Kit, In-place**	**9615364501**
♦	**Seal Kit, Complete**	**9615364601**

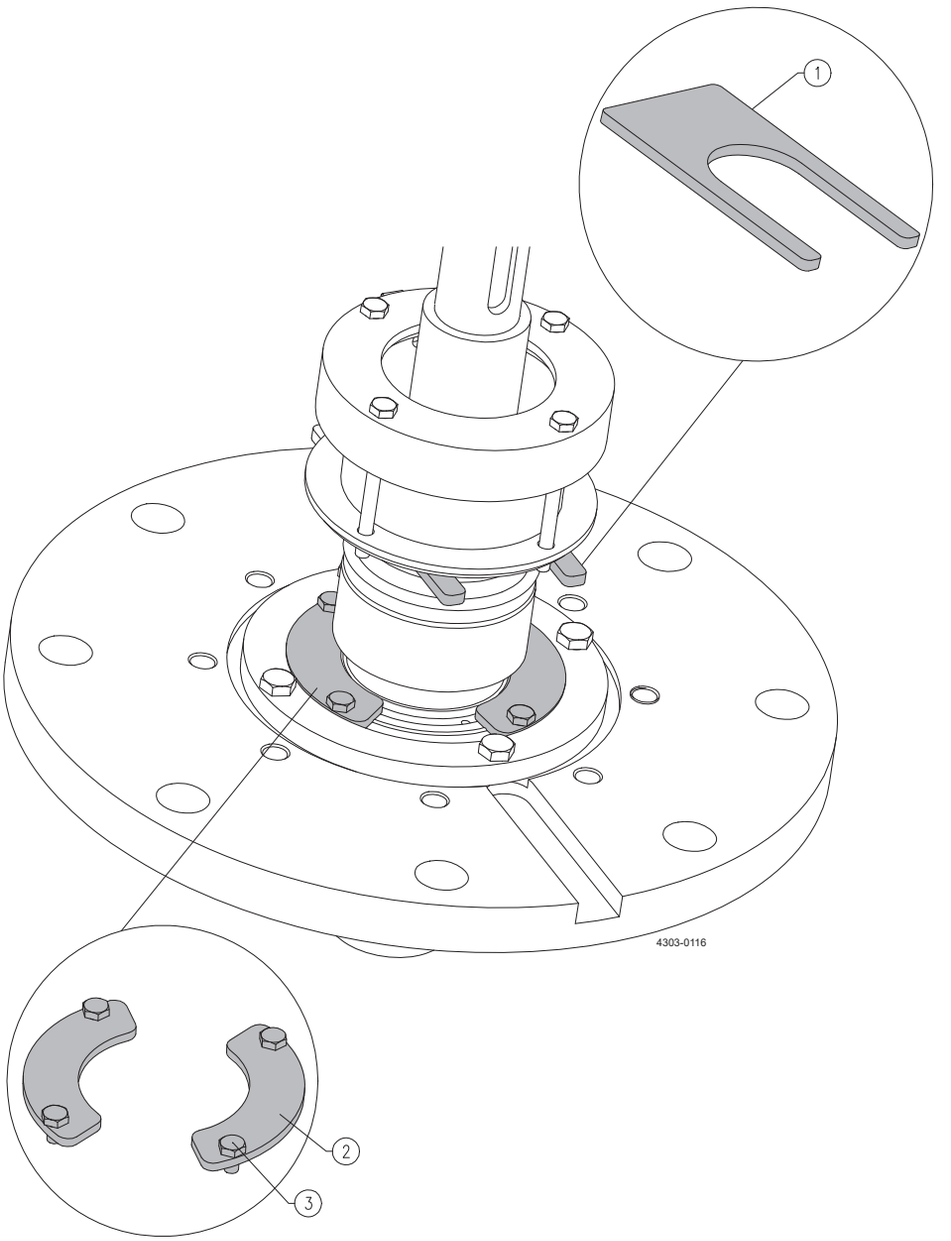
1
4303-0116
2
3

Pos		Qty	Denomination	Item no.
1	◆	1	Tool, flat	9615269301
2	◆	2	Tool, retainer	9615236901
3	◆	4	Screw	TE2601000098
-	◆	1	Hook wrench with pin	9615365701

		Item no.
Seal kit, Tools		
◆	**Seal kit, Tools**	**9615364701**

Agitator ALT ATEX, marking II 1/2G... or II 1/2D..., size Ø30

Thread size	Lk
M10	50
M12	60
M16	80
M20	100

Ø shaft	L2 max	(M-HSL) max	CL
Ø30	274,5	29,5	8,275
Ø40	294,5	47,5	7,25
Ø50	325,5	47,5	7,3
Ø60	323	45	5,8
Ø70	327,5	45	8,325
Ø80	334,5	52	8,325
Ø90	334,5	52	5,825

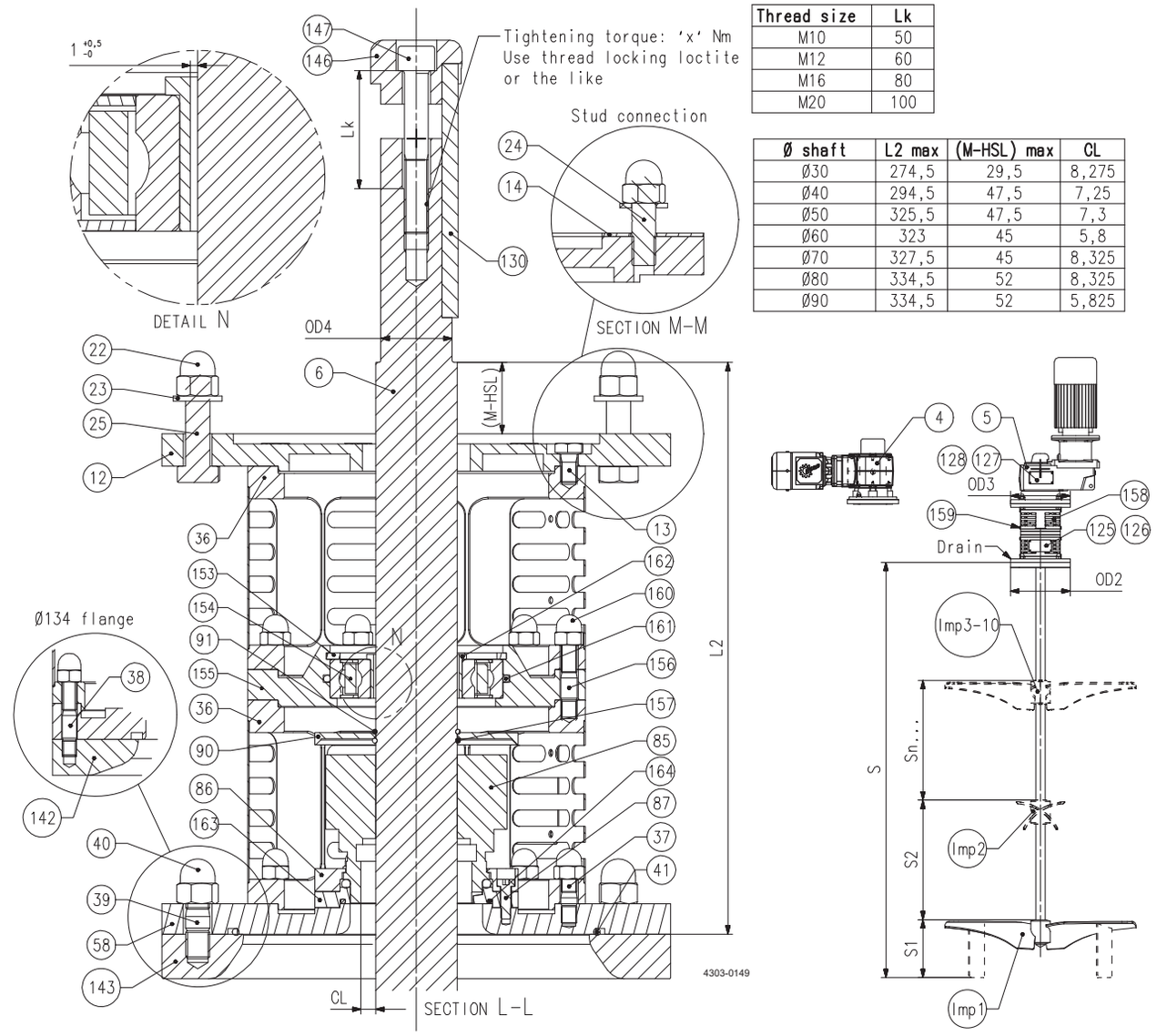

Screwed, with seal O-ring 4 point set screws (4PS)

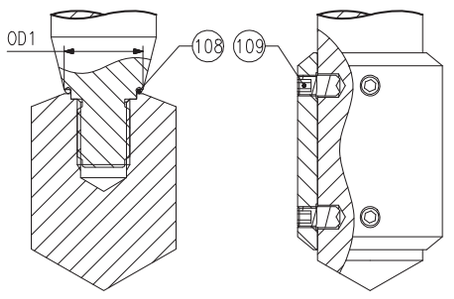

Prepered for welding (PFW)

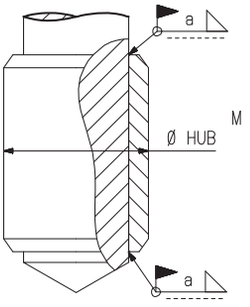

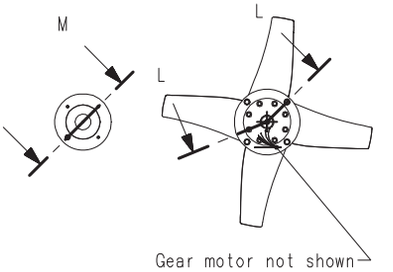

Pos		Qty	Denomination	size: Ø30
Agitator ALT ATEX, marking II 1/2G... or II 1/2D..., size Ø30				
4		1	GR gear motor, hollow shaft	RI
5		1	GP gear motor, hollow shaft	RI
6		1	Shaft	RI
12		1	Drive unit flange, (OD3=140), Sanitary / Industrial	TE26C3066960
		1	Drive unit flange, (OD3=160), Sanitary / Industrial	TE26C306016A
		1	Drive unit flange, (OD3=140), UltraPure	TE26B3066960
		1	Drive unit flange, (OD3=160), UltraPure	TE26B306016A
13		8	Screw	TE2601000098
22		4	Cap nut (for flange OD3 = 140)	TE2601000263
		4	Cap nut (for flange OD3 = 160)	TE2601000263
23		4	Washer (for flange OD3 = 140)	TE2601000349
		4	Washer (for flange OD3 = 160), height 2,5mm	TE2601094010
24		4	Stud (for flange OD3 = 140)	TE2601000312
		4	Stud (for flange OD3 = 160)	TE2601000034
36		2	Lantern, Sanitary / Industrial	TE26C401095A
		2	Lantern, UltraPure	TE26B501095A
37		8	Stud	TE2601000311
38		8	Stud	TE2601000112
39		4	Stud (for flange AL, std. OD2=200)	TE2601000307
40		4	Cap nut (for flange AL, std. OD2=200)	TE2601000355
41		1	O-ring, FEP (for flange AL, std. OD2=134)	TE2601000078
		1	O-ring, FEP (for flange AL, std. OD2=200)	TE2601000073
		1	O-ring, FEP (for flange EN1092, std. OD2=200)	TE2601000072
		1	O-ring, FEP (for flange EN1092, std. OD2=220)	TE2601000073
58		1	Mounting flange, AL, std. (OD2=134), Sanitary / Industrial	TE26C3071740
		1	Mounting flange, AL, std. (OD2=200), Sanitary / Industrial	TE26C306655A
		1	Mounting flange, EN1092-std. (OD2=200), Sanitary / Industrial	TE26C3068960
		1	Mounting flange, EN1092, std. (OD2=220), Sanitary / Industrial	TE26C306154B
		1	Mounting flange, AL, std. (OD2=134), UltraPure	TE26B5071740
		1	Mounting flange, AL, std. (OD2=200), UltraPure	TE26B506655A
		1	Mounting flange, EN1092-std. (OD2=200), UltraPure	TE26B5068960
		1	Mounting flange, EN1092, std. (OD2=220), UltraPure	TE26B506154B
		1	Mounting flange, AL, std. (OD2=134), UltraPure w. E-polish	TE26A5071740
		1	Mounting flange, AL, std. (OD2=200), UltraPure w. E-polish	TE26A506655A
		1	Mounting flange, EN1092-std. (OD2=200), UltraPure w. E-polish	TE26A5068960
		1	Mounting flange, EN1092, std. (OD2=220), UltraPure w. E-polish	TE26A506154B
85	♦	1	S seal, C/SiC, FPM, ATEX II 1/2GD c TX *)	TE2602000307
	□	1	S seal, C/SiC, EPDM, ATEX II 1/2GD c TX *)	TE2602000308
	▲	1	S seal, C/SiC, FFKM, ATEX II 1/2GD c TX *)	TE2602000302
86		1	Ring, retainer	TE260406156C
87		4	Screw	TE2601000326
		4	Screw **)	9615452401
90		1	Oil trap	TE2604061570
91	□♦	1	O-ring	TE2601000287
108		1	O-ring, FEP (for shaft size OD1=25)	TE2601000243
		1	O-ring, FEP (for shaft size OD1=30)	TE2601000244
109		4/Imp	Screw, pointed, M6	TE2601000357
		4/Imp	Screw, pointed, M8	TE2601000358
		4/Imp	Screw, pointed, M10	TE2601000015
		4/Imp	Screw, pointed, M12	TE2601000212
125		1	Name plate	9615273101
126		4	Rivet	TE2601000391
130		1	Parallel key	9615362101
146		1	Fixing element	9615269506
147		1	Screw	9615362001
153		1	Circlip, inner	9615430401
154		1	Bearing	9615431101
155		1	Flange, collision protection	9615425701
156		8	Stud	TE2601000112
157		1	Spring, ring	9615432201
158		4	Guard	9615272801
159		16	Screw	TE2601000031
160		16	Cap nut	TE2601000262
161		1	O-ring	TE2601000673
162		1	Sleeve	9615428301
163		1	Drive ring, stationary **)	9615451701
164		1	O-ring, FEP**)	TE2601000189

RI = Request Item. Article number available upon request by serial number or article number of the agitator.

*) The listed article numbers are for the complete seal. The seal-kit contains only the ceramic parts and elastomers.

**) Only to be used when seal elastomer for pos. 85 is FFKM.

Agitator ALT ATEX, marking II 1/2G... or II 1/2D..., size Ø30

Thread size	Lk
M10	50
M12	60
M16	80
M20	100

Ø shaft	L2 max	(M-HSL) max	CL
Ø30	274,5	29,5	8,275
Ø40	294,5	47,5	7,25
Ø50	325,5	47,5	7,3
Ø60	323	45	5,8
Ø70	327,5	45	8,325
Ø80	334,5	52	8,325
Ø90	334,5	52	5,825

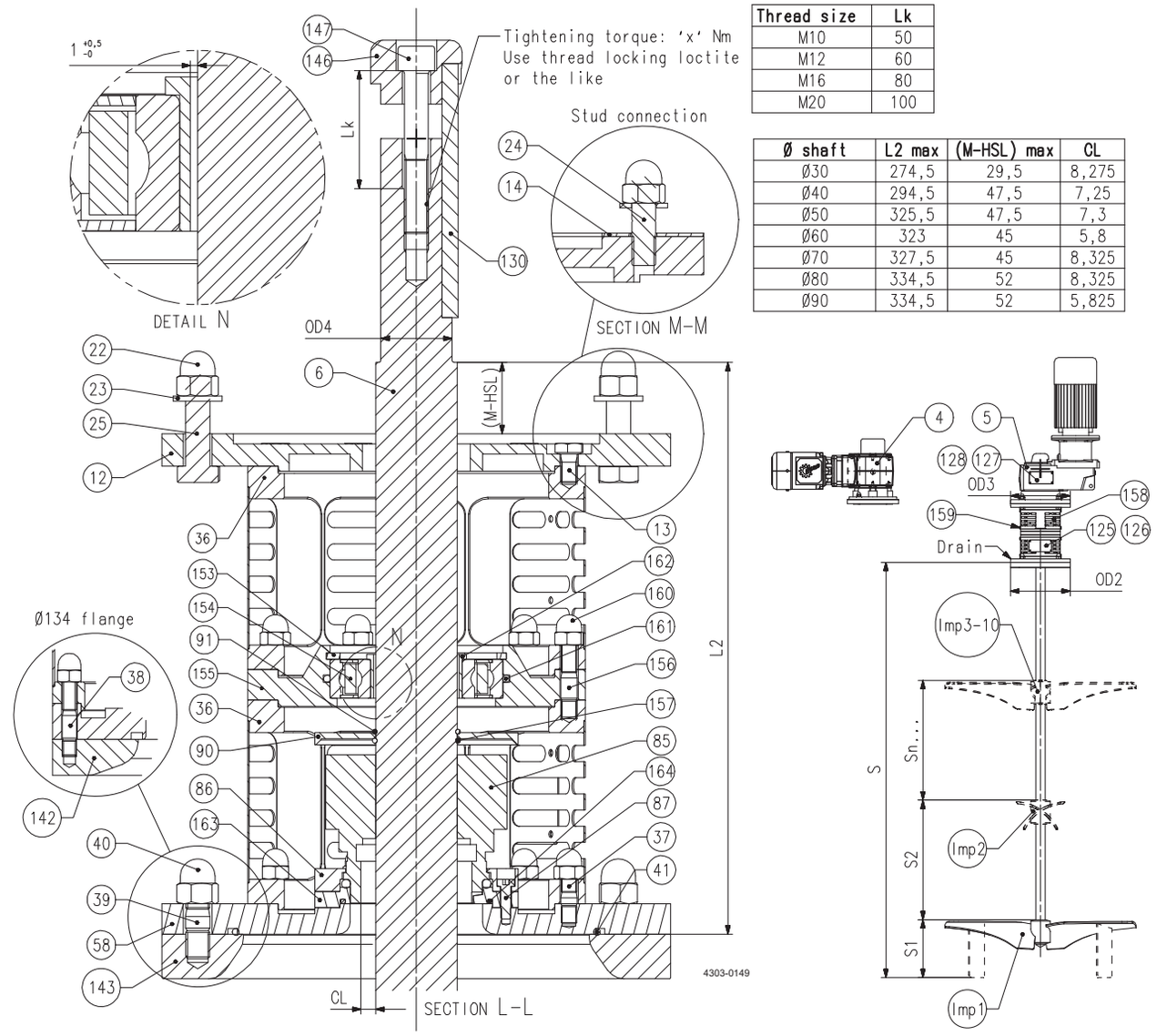

Screwed, with seal O-ring 4 point set screws (4PS)

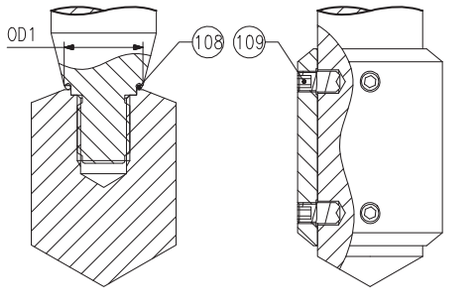

Prepered for welding (PFW)

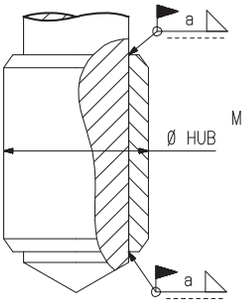

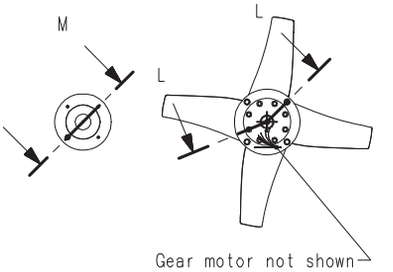

Pos	Qty	Denomination	size: Ø30

Agitator ALT ATEX, marking II 1/2G... or II 1/2D..., size Ø30

Imp1	1	Impeller device, EnSaFoil (E125-E1900, D2(L), D3(L)) or Low Level (L600-L1700) or EnSaFerm (F450-F1900)	RI
Imp2-Imp10	1	Impeller device, EnSaFoil (E250-E1900, D2, D3) or EnSaFerm (F450-F1900)	RI

RI = Request Item. Article number available upon request by serial number or article number of the agitator.

		size: Ø30

Seal kits

□	**Seal kit, S, C/SiC, EPDM**	**TE2613000040**
♦	**Seal kit, S, C/SiC, FPM**	**TE2613000031**
▲	**Seal kit, S, C/SiC, FFKM**	**TE2613000302**

Agitator ALT ATEX, marking II 1/2G... or II 1/2D..., size Ø40

Thread size	Lk
M10	50
M12	60
M16	80
M20	100

Ø shaft	L2 max	(M-HSL) max	CL
Ø30	274,5	29,5	8,275
Ø40	294,5	47,5	7,25
Ø50	325,5	47,5	7,3
Ø60	323	45	5,8
Ø70	327,5	45	8,325
Ø80	334,5	52	8,325
Ø90	334,5	52	5,825

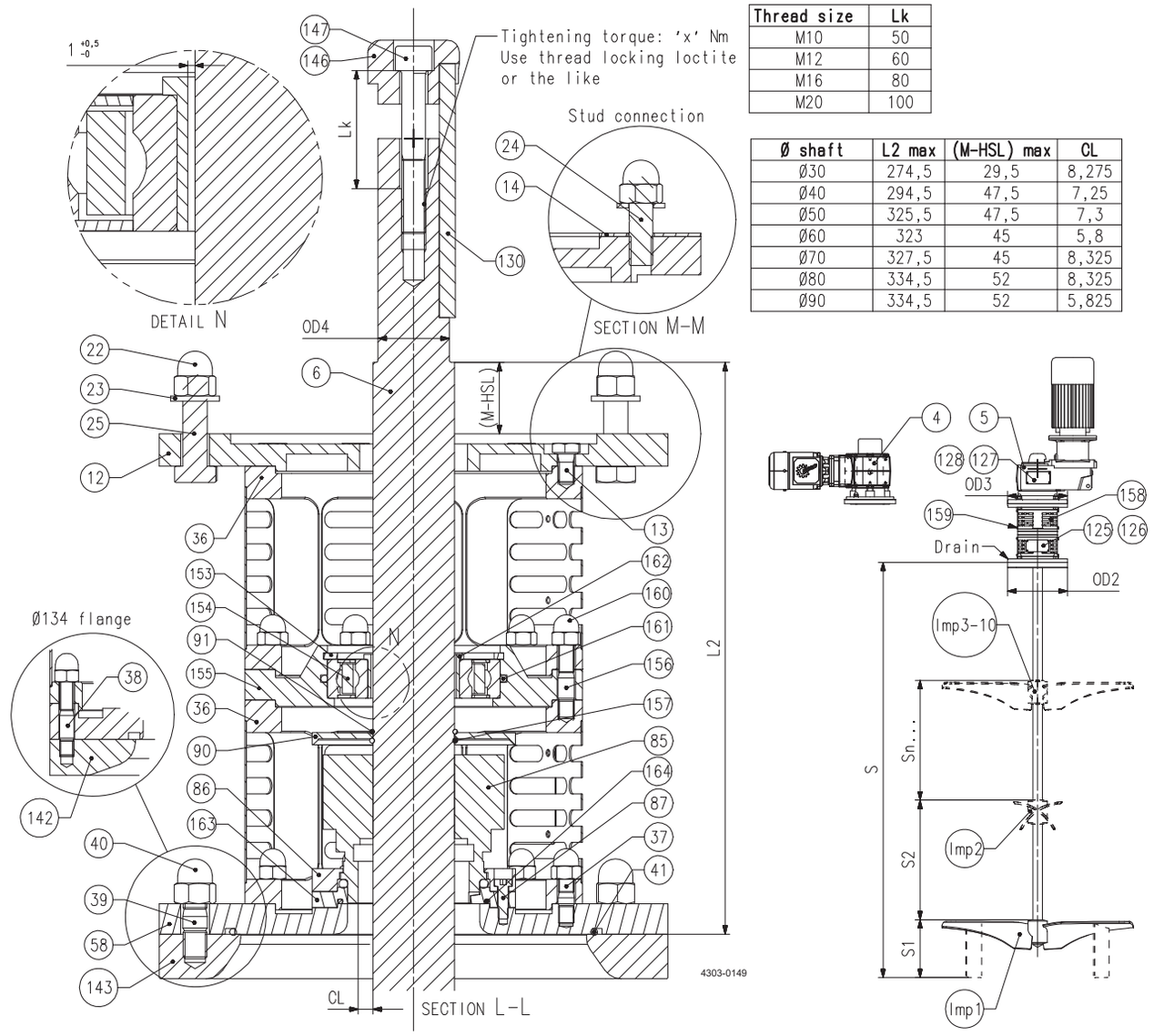

Screwed, with seal O-ring 4 point set screws (4PS)

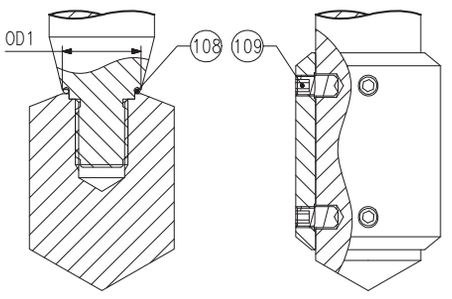

Prepered for welding (PFW)

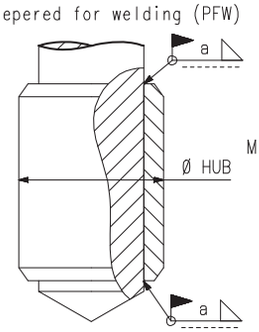

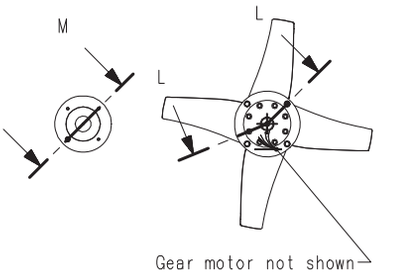

Pos		Qty	Denomination	size: Ø40
Agitator ALT ATEX, marking II 1/2G... or II 1/2D..., size Ø40				
4		1	GR gear motor, hollow shaft	RI
5		1	GP gear motor, hollow shaft	RI
6		1	Shaft	RI
12		1	Drive unit flange, (OD3=200), Sanitary / Industrial	TE26C304913A
		1	Drive unit flange, (OD3=250), Sanitary / Industrial	TE26C306126A
		1	Drive unit flange, (OD3=200), UltraPure	TE26B304913A
		1	Drive unit flange, (OD3=250), UltraPure	TE26B306126A
13		8	Screw	TE2601000554
22		4	Cap nut (for flange OD3 = 200)	TE2601000355
23		4	Washer (for flange OD3 = 200)	TE2601000346
		4	Washer (for flange OD3 = 250)	TE2601000347
		4	Washer (for flange OD3 = 250), height 4mm	TE2601094060
24		4	Stud (for flange OD3 = 200)	TE2601000307
25		4	Screw (for flange OD3 = 250), length 45mm	TE2601000342
		4	Screw (for flange OD3 = 250), length 50mm	TE2601000531
36		2	Lantern, Sanitary / Industrial	TE26C4010110
		2	Lantern, UltraPure	TE26B5010110
37		8	Stud	TE2601000312
39		4	Stud (for flange AL, std. OD2=250)	TE2601000309
40		4	Cap nut (for flange AL, std. OD2=250)	TE2601000261
41		1	O-ring, FEP (for flange OD2=250)	TE2601000074
		1	O-ring, FEP (for flange OD2=285)	TE2601000074
58		1	Mounting flange, AL, std. (OD2=250), Sanitary / Industrial	TE26C3069460
		1	Mounting flange, EN1092, std. (OD2=250), Sanitary / Industrial	TE26C3068980
		1	Mounting flange, EN1092, std. (OD2=285), Sanitary / Industrial	TE26C3070940
		1	Mounting flange, AL, std. (OD2=250), UltraPure	TE26B5069460
		1	Mounting flange, EN1092, std. (OD2=250), UltraPure	TE26B5068980
		1	Mounting flange, EN1092, std. (OD2=285), UltraPure	TE26B5070940
		1	Mounting flange, AL, std. (OD2=250), UltraPure w. E-polish	TE26A5069460
		1	Mounting flange, EN1092, std. (OD2=250), UltraPure w. E-polish	TE26A5068980
		1	Mounting flange, EN1092, std. (OD2=285), UltraPure w. E-polish	TE26A5070940
85	♦	1	S seal, C/SiC, FPM, ATEX II 1/2GD c TX *)	TE2602000304
	□	1	S seal, C/SiC, EPDM, ATEX II 1/2GD c TX *)	TE2602000310
	▲	1	S seal, C/SiC*, FFKM, ATEX II 1/2GD c TX *)	TE2602000314
86		1	Ring, retainer	TE260405177B
87		4	Screw	TE2601000326
		4	Screw **)	9615452401
90		1	Oil trap	TE2604055860
91	□♦	1	O-ring	TE2601000292
108		1	O-ring, FEP (for shaft size OD1=25)	TE2601000243
		1	O-ring, FEP (for shaft size OD1=30)	TE2601000244
		1	O-ring, FEP (for shaft size OD1=35)	TE2601000245
		1	O-ring, FEP (for shaft size OD1=40)	TE2601000246
109		4/Imp	Screw, pointed, M8	TE2601000358
		4/Imp	Screw, pointed, M10	TE2601000015
		4/Imp	Screw, pointed, M12	TE2601000212
125		1	Name plate	9615273101
126		4	Rivet	TE2601000391
130		1	Parallel key (for shaft OD4=30)	9615362101
		1	Parallel key (for shaft OD4=35)	9615316901
146		1	Fixing element (for shaft OD4=30)	9615269503
		1	Fixing element (for shaft OD4=35)	9615269504
147		1	Screw (for shaft OD4=30)	9615362001
		1	Screw (for shaft OD4=35)	9615317001
153		1	Circlip, inner	9615430501
154		1	Bearing	9615431201
155		1	Flange, collision protection	9615426701
156		8	Stud	TE2601000225
157		1	Spring, ring	9615432301
158		4	Guard	9615316701
159		16	Screw	TE2601000031
160		16	Cap nut	TE2601000263
161		1	O-ring	TE2601000501
162		1	Sleeve	9615428302
163		1	Drive ring, stationary **)	9615451702
164		1	O-ring, FEP**)	TE2601000610

RI = Request Item. Article number available upon request by serial number or article number of the agitator.

*) The listed article numbers are for the complete seal. The seal-kit contains only the ceramic parts and elastomers.

**) Only to be used when seal elastomer for pos. 85 is FFKM.

Agitator ALT ATEX, marking II 1/2G... or II 1/2D..., size Ø40

Thread size	Lk
M10	50
M12	60
M16	80
M20	100

Ø shaft	L2 max	(M-HSL) max	CL
Ø30	274,5	29,5	8,275
Ø40	294,5	47,5	7,25
Ø50	325,5	47,5	7,3
Ø60	323	45	5,8
Ø70	327,5	45	8,325
Ø80	334,5	52	8,325
Ø90	334,5	52	5,825

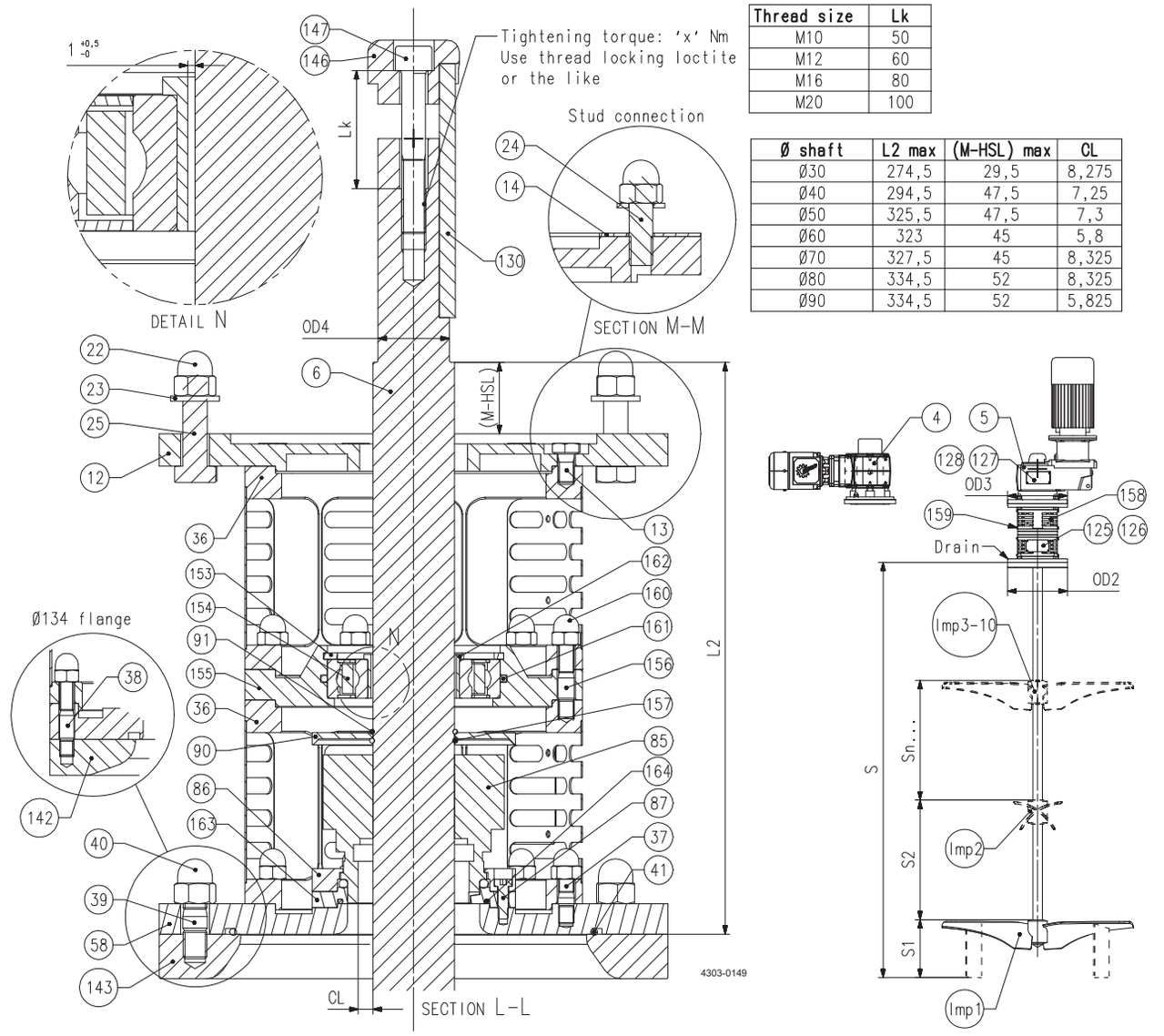

Screwed, with seal O-ring 4 point set screws (4PS)

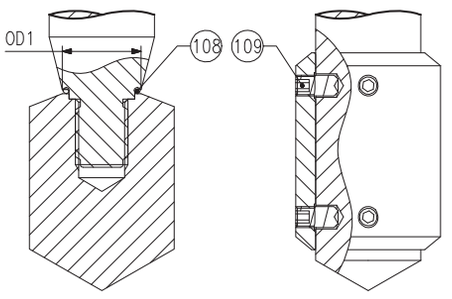

Prepered for welding (PFW)

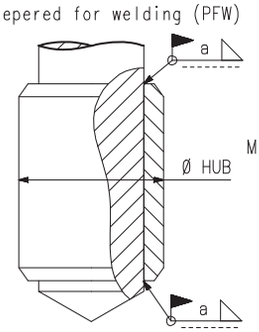

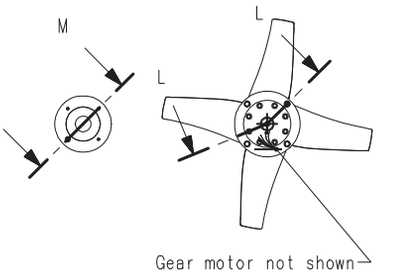

Pos	Qty	Denomination	size: ø40

Agitator ALT ATEX, marking II 1/2G... or II 1/2D..., size Ø40

Imp1	1	Impeller device, EnSaFoil (E125-E1900, D2(L), D3(L)) or Low Level (L600-L1700) or EnSaFerm (F450-F1900)	RI
Imp2-Imp10	1	Impeller device, EnSaFoil (E250-E1900, D2, D3) or EnSaFerm (F450-F1900)	RI

RI = Request Item. Article number available upon request by serial number or article number of the agitator.

		size: Ø40

Seal kits

□	Seal kit, S, C/SiC, EPDM	TE2613000042
♦	Seal kit, S, C/SiC, FPM	TE2613000033
▲	Seal kit, S, C/SiC, FFKM	TE2613000314

Agitator ALT ATEX, marking II 1/2G... or II 1/2D..., size Ø50

Thread size	Lk
M10	50
M12	60
M16	80
M20	100

Ø shaft	L2 max	(M-HSL) max	CL
Ø30	274,5	29,5	8,275
Ø40	294,5	47,5	7,25
Ø50	325,5	47,5	7,3
Ø60	323	45	5,8
Ø70	327,5	45	8,325
Ø80	334,5	52	8,325
Ø90	334,5	52	5,825

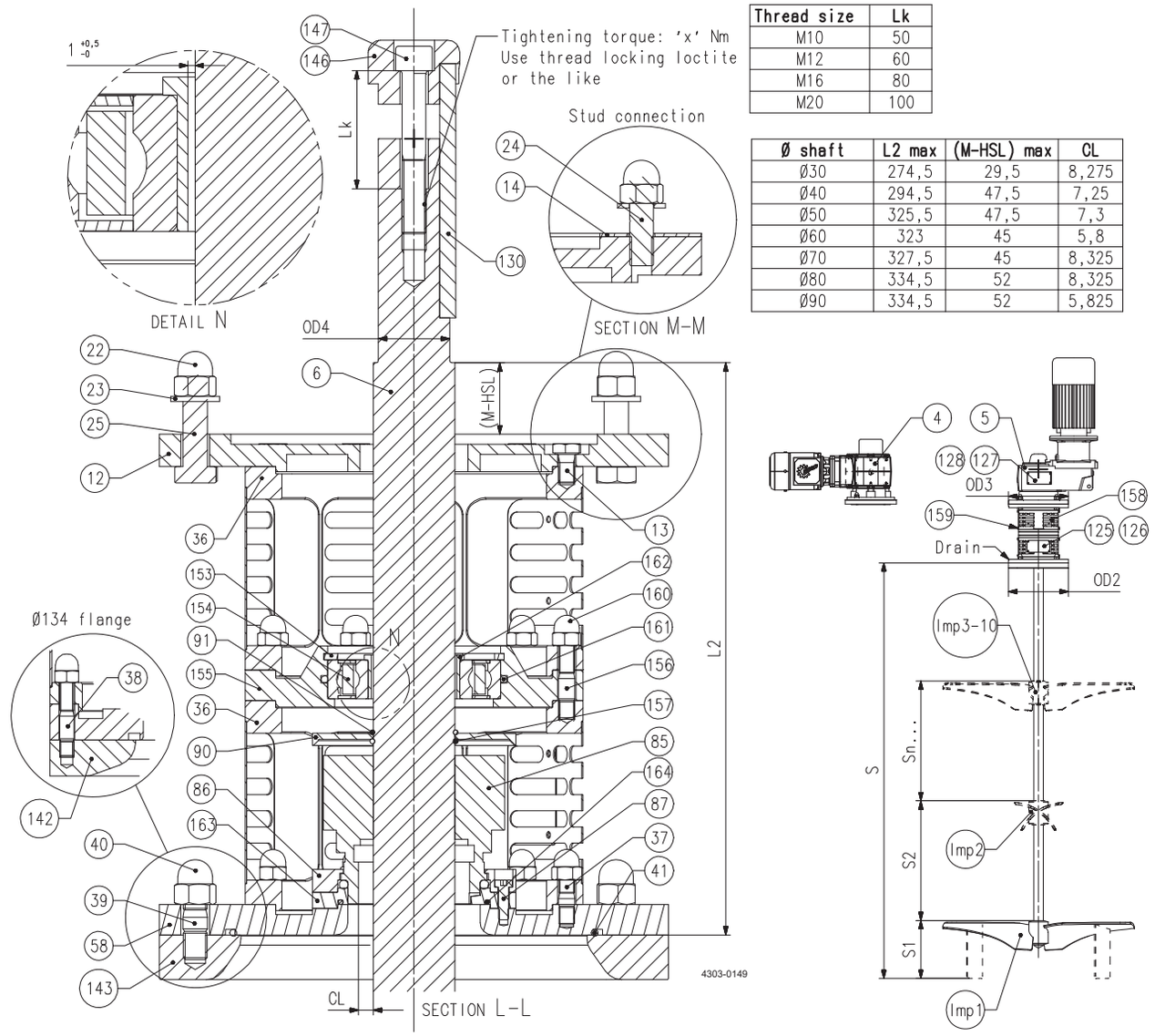

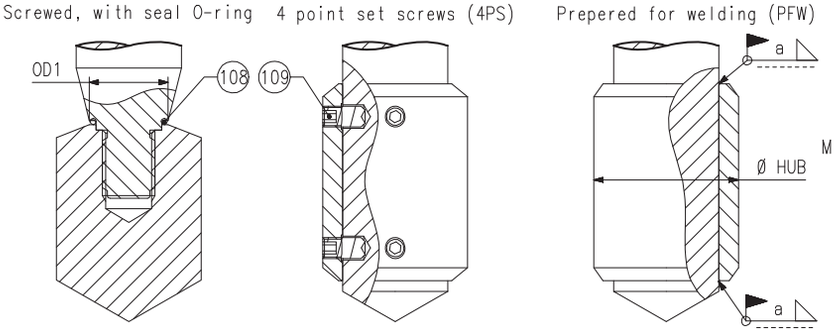

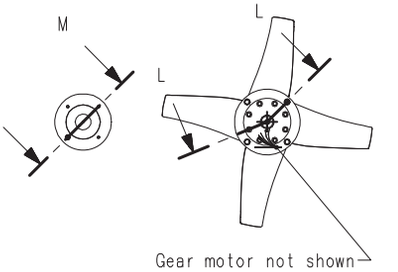

Pos	Qty	Denomination	size: Ø50

Agitator ALT ATEX, marking II 1/2G... or II 1/2D..., size Ø50

4	1	GR gear motor, hollow shaft	RI
5	1	GP gear motor, hollow shaft	RI
6	1	Shaft	RI
12	1	Drive unit flange, (OD3=200), Sanitary / Industrial	TE26C3093800
	1	Drive unit flange, (OD3=250), Sanitary / Industrial	TE26C3065470
	1	Drive unit flange, (OD3=300), Sanitary / Industrial	TE26C303769A
	1	Drive unit flange, (OD3=200), UltraPure	TE26B3093800
	1	Drive unit flange, (OD3=250), UltraPure	TE26B3065470
	1	Drive unit flange, (OD3=300), UltraPure	TE26B303769A
13	8	Screw	TE2601000562
14	1	Disc spacer (for flange OD3=200)	TE2603093820
22	4	Cap nut (for flange OD3 = 200)	TE2601000355
	4	Cap nut (for flange OD3 = 300)	TE2601000261
23	4	Washer (for flange OD3 = 200)	TE2601000346
	4	Washer (for flange OD3 = 250)	TE2601000347
	4	Washer (for flange OD3 = 300)	TE2601000347
24	4	Stud (for flange OD3 = 200)	TE2601000307
	4	Stud (for flange OD3 = 250), length 30mm	TE2601000310
	4	Stud (for flange OD3 = 250), length 35mm	TE2601000393
25	4	Screw (for flange OD3 = 300)	TE2601000016
36	2	Lantern, Sanitary / Industrial	TE26C4010960
	2	Lantern, complete, UltraPure	TE26B5010960
37	8	Stud	TE2601000309
39	4	Stud (for flange AL, std. OD2=300)	TE2601000310
40	4	Cap nut (for flange AL, std. OD2=300)	TE2601000261
41	1	O-ring, FEP (for flange OD2=285)	TE2601000550
	1	O-ring, FEP (for flange OD2=300)	TE2601000075
	1	O-ring, FEP (for flange OD2=340)	TE2601000075
	1	O-ring, FEP (for flange OD2=342,9)	TE2601000076
58	1	Mounting flange, EN1092, std. (OD2=285), Sanitary / Industrial	TE26C3086690
	1	Mounting flange, AL, std. (OD2=300), Sanitary / Industrial	TE26C3087490
	1	Mounting flange, EN1092, std. (OD2=340), Sanitary / Industrial	TE26C306734B
	1	Mounting flange, ANSI, std. (OD2=342,9), Sanitary / Industrial	TE26C3076080
	1	Mounting flange, EN1092, std. (OD2=285), UltraPure	TE26B5086690
	1	Mounting flange, AL, std. (OD2=300), UltraPure	TE26B5087490
	1	Mounting flange, EN1092, std. (OD2=340), UltraPure	TE26B506734B
	1	Mounting flange, ANSI, std. (OD2=342,9), UltraPure	TE26B5076080
	1	Mounting flange, EN1092, std. (OD2=285), UltraPure w. E-polish	TE26A5086690
	1	Mounting flange, AL, std. (OD2=300), UltraPure w. E-polish	TE26A5087490
	1	Mounting flange, EN1092, std. (OD2=340), UltraPure w. E-polish	TE26A506734B
	1	Mounting flange, ANSI, std. (OD2=342,9), UltraPure w. E-polish	TE26A5076080
85 ♦	1	S seal, C/SiC, FPM, ATEX II 1/2GD c TX *)	TE2602000327
□	1	S seal, C/SiC, EPDM, ATEX II 1/2GD c TX *)	TE2602000328
▲	1	S seal, C/SiC, FFKM, ATEX II 1/2GD c TX *)	9615452501
86	1	Ring, retainer	TE260405346B
87	4	Screw	TE2601000326
	4	Screw **)	9615452401
90	1	Oil trap	TE2604039770
91 □♦	1	O-ring	TE2601000294
108	1	O-ring, FEP (for shaft size OD1=25)	TE2601000243
	1	O-ring, FEP (for shaft size OD1=30)	TE2601000244
	1	O-ring, FEP (for shaft size OD1=35)	TE2601000245
	1	O-ring, FEP (for shaft size OD1=40)	TE2601000246
	1	O-ring, FEP (for shaft size OD1=45)	TE2601000247
	1	O-ring, FEP (for shaft size OD1=50)	TE2601000248
109	4/Imp	Screw, pointed, M10	TE2601000443
	4/Imp	Screw, pointed, M12	TE2601000596
125	1	Name plate	9615273101
126	4	Rivet	TE2601000391
130	1	Parallel key (for shaft OD4=40), length = 140mm	9615377301
	1	Parallel key (for shaft OD4=40), length = 160mm	TE2601000678
146	1	Fixing element	9615269505
147	1	Screw	TE2601000665
153	1	Circlip, inner	9615430601
154	1	Bearing	9615431301
155	1	Flange, collision protection	9615426901
156	8	Stud	TE2601000022
157	1	Spring, ring	9615432401
158	4	Guard	9615383201
159	16	Screw	TE2601000031
160	16	Cap nut	TE2601000261

RI = Request Item. Article number available upon request by serial number or article number of the agitator.

*) The listed article numbers are for the complete seal. The seal-kit contains only the ceramic parts and elastomers.

Agitator ALT ATEX, marking II 1/2G... or II 1/2D..., size Ø50

Thread size	Lk
M10	50
M12	60
M16	80
M20	100

Ø shaft	L2 max	(M-HSL) max	CL
Ø30	274,5	29,5	8,275
Ø40	294,5	47,5	7,25
Ø50	325,5	47,5	7,3
Ø60	323	45	5,8
Ø70	327,5	45	8,325
Ø80	334,5	52	8,325
Ø90	334,5	52	5,825

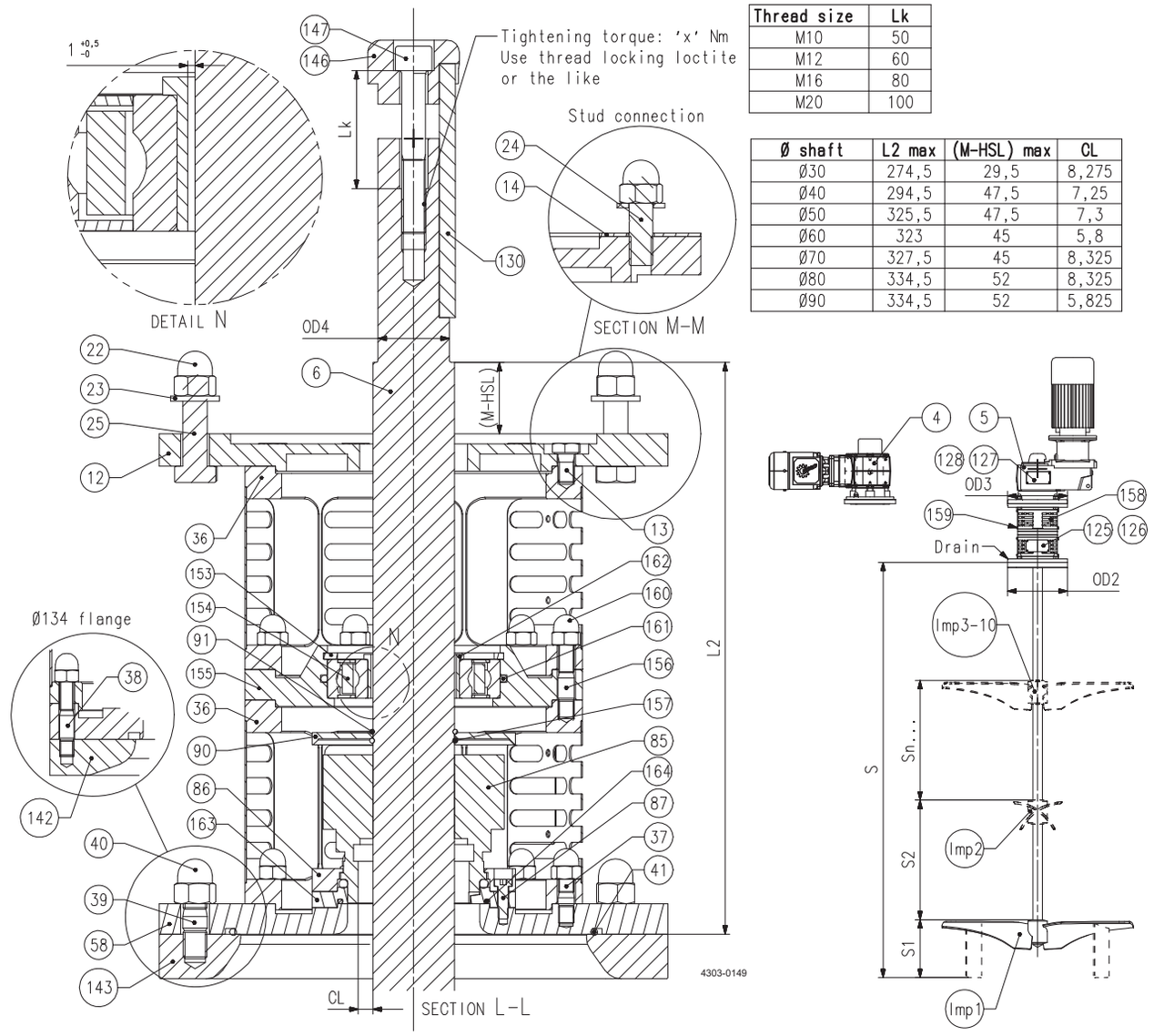

Screwed, with seal O-ring 4 point set screws (4PS)

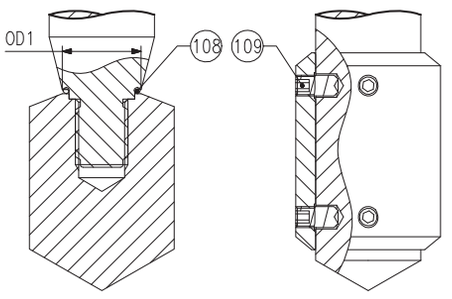

Prepered for welding (PFW)

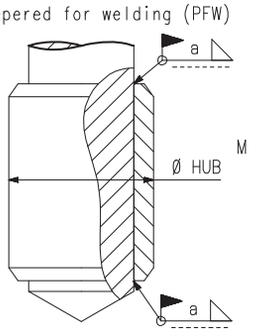

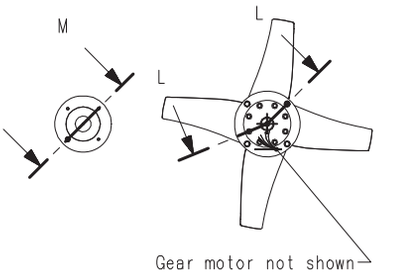

Pos	Qty	Denomination	size: Ø50

Agitator ALT ATEX, marking II 1/2G... or II 1/2D..., size Ø50

161	1	O-ring	9615431801
162	1	Sleeve	9615428303
163	1	Drive ring, stationary **)	9615451703
164	1	O-ring, FEP**)	9615451901
Imp1	1	Impeller device, EnSaFoil (E125-E1900, D2(L), D3(L)) or Low Level (L600-L1700) or EnSaFerm (F450-F1900)	RI
Imp2-Imp10	1	Impeller device, EnSaFoil (E250-E1900, D2, D3) or EnSaFerm (F450-F1900)	RI

RI = Request Item. Article number available upon request by serial number or article number of the agitator.

**) Only to be used when seal elastomer for pos. 85 is FFKM.

	size: Ø50

Seal kits

□	Seal kit, S, C/SiC, EPDM	TE2613000045
♦	Seal kit, S, C/SiC, FPM	TE2613000035
▲	Seal kit, S, C/SiC, FFKM	9615453801

Agitator ALT ATEX, marking II 1/2G... or II 1/2D..., size Ø60

Thread size	Lk
M10	50
M12	60
M16	80
M20	100

Ø shaft	L2 max	(M-HSL) max	CL
Ø30	274,5	29,5	8,275
Ø40	294,5	47,5	7,25
Ø50	325,5	47,5	7,3
Ø60	323	45	5,8
Ø70	327,5	45	8,325
Ø80	334,5	52	8,325
Ø90	334,5	52	5,825

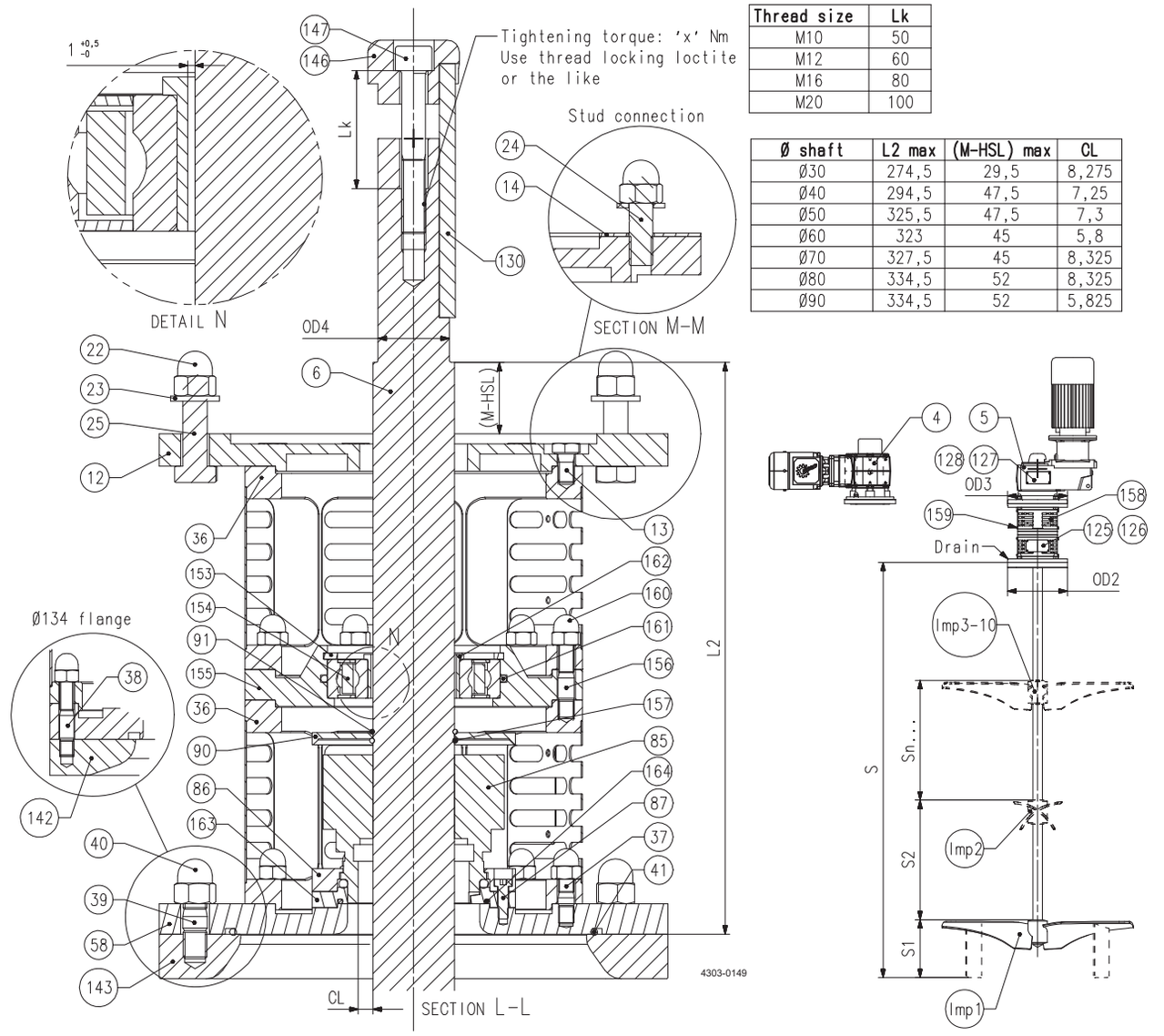

Screwed, with seal O-ring 4 point set screws (4PS)

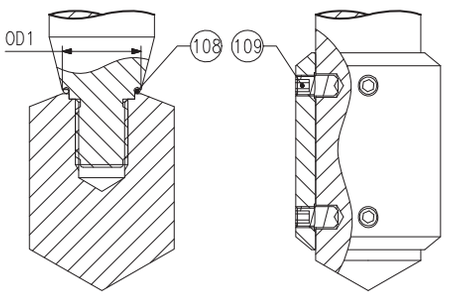

Prepered for welding (PFW)

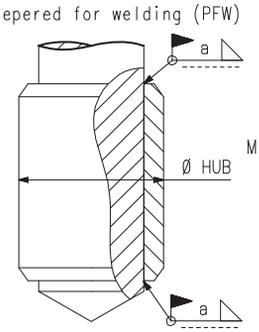

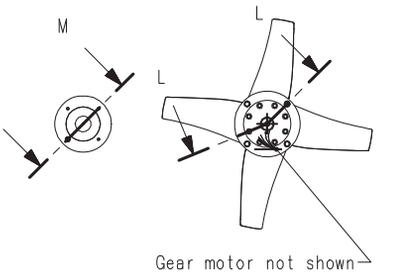

Pos		Qty	Denomination	size: Ø60

Agitator ALT ATEX, marking II 1/2G... or II 1/2D..., size Ø60

4		1	GR gear motor, hollow shaft	RI
5		1	GP gear motor, hollow shaft	RI
6		1	Shaft	RI
12		1	Drive unit flange, (OD3=250), Sanitary / Industrial	TE26C3073230
		1	Drive unit flange, (OD3=300), Sanitary / Industrial	TE26C306549A
		1	Drive unit flange, (OD3=250), UltraPure	TE26B3073230
		1	Drive unit flange, (OD3=300), UltraPure	TE26B306549A
13		8	Screw (for flange OD3=250)	TE2601000562
		12	Screw	TE2601000562
22		4	Cap nut (for flange OD3 = 250)	TE2601000261
		4	Cap nut (for flange OD3 = 300)	TE2601000261
23		4	Washer (for flange OD3 = 250)	TE2601000347
		4	Washer (for flange OD3 = 300)	TE2601000347
24		4	Stud (for flange OD3 = 250), length 30mm	TE2601000310
		4	Stud (for flange OD3 = 250), length 35mm	TE2601000393
25		4	Screw (for flange OD3 = 300)	TE2601000579
36		2	Lantern, Sanitary / Industrial	TE26C4010970
		2	Lantern, complete, UltraPure	TE26B5010970
37		12	Stud	TE2601000309
39		4	Stud (for flange AL, std. OD2=300)	TE2601000310
		4	Stud (for flange AL, std. OD2=350)	TE2601000137
40		4	Cap nut (for flange AL, std. OD2=300)	TE2601000261
		4	Cap nut (for flange AL, std. OD2=350)	TE2601000058
41		1	O-ring, FEP (for flange OD2=300)	TE2601000075
		1	O-ring, FEP (for flange OD2=340)	TE2601000075
		1	O-ring, FEP (for flange OD2=350)	TE2601000076
58		1	Mounting flange, AL, std. (OD2=300), Sanitary / Industrial	TE26C3087500
		1	Mounting flange, EN1092, std. (OD2=340), Sanitary / Industrial	TE26C3087540
		1	Mounting flange, AL, std. (OD2=350), Sanitary / Industrial	TE26C3089040
		1	Mounting flange, AL, std. (OD2=300), UltraPure	TE26B5087500
		1	Mounting flange, EN1092, std. (OD2=340), UltraPure	TE26B5087540
		1	Mounting flange, AL, std. (OD2=350), UltraPure	TE26B5089040
		1	Mounting flange, AL, std. (OD2=300), UltraPure w. E-polish	TE26A5087500
		1	Mounting flange, EN1092, std. (OD2=340), UltraPure w. E-polish	TE26A5087540
		1	Mounting flange, AL, std. (OD2=350), UltraPure w. E-polish	TE26A5089040
85	♦	1	S seal, C/SiC, FPM, ATEX II 1/2GD c TX *)	TE2602000329
	□	1	S seal, C/SiC, EPDM, ATEX II 1/2GD c TX *)	TE2602000330
	▲	1	S seal, C/SiC, FFKM, ATEX II 1/2GD c TX *)	9615452601
86		1	Ring, retainer	TE260405344A
87		4	Screw	TE2601000326
		4	Screw **)	9615452401
90		1	Oil trap	TE2604053450
91	□♦	1	O-ring	TE2601000297
108		1	O-ring, FEP (for shaft size OD1=25)	TE2601000243
		1	O-ring, FEP (for shaft size OD1=30)	TE2601000244
		1	O-ring, FEP (for shaft size OD1=35)	TE2601000245
		1	O-ring, FEP (for shaft size OD1=40)	TE2601000246
		1	O-ring, FEP (for shaft size OD1=45)	TE2601000247
		1	O-ring, FEP (for shaft size OD1=50)	TE2601000248
		1	O-ring, FEP (for shaft size OD1=55)	TE2601000249
		1	O-ring, FEP (for shaft size OD1=60)	TE2601000250
109		4/Imp	Screw, pointed, M10	TE2601000443
		4/Imp	Screw, pointed, M12	TE2601000587
125		1	Name plate	9615273101
126		4	Rivet	TE2601000391
130		1	Parallel key (for shaft OD4=50)	TE2601000664
		1	Parallel key (for shaft OD4=55)	TE2601000557
146		1	Fixing element (for shaft OD4=50)	9615269502
		1	Fixing element (for shaft OD4=55)	9615269509
147		1	Screw (for shaft OD4=50)	TE2601000665
		1	Screw (for shaft OD4=55)	TE2601000663
153		1	Circlip, inner	9615430701
154		1	Bearing	9615431401
155		1	Flange, collision protection	9615427001
156		12	Stud	TE2601000022
157		1	Spring, ring	9615432501
158		4	Guard	9615383901
159		16	Screw	TE2601000031
160		24	Cap nut	TE2601000261
161		1	O-ring	9615432001
162		1	Sleeve	9615428304
163		1	Drive ring, stationary **)	9615451704
164		1	O-ring, FEP**)	9615452001

RI = Request Item. Article number available upon request by serial number or article number of the agitator.
*The listed article numbers are for the complete seal. The seal-kit contains only the ceramic parts and elastomers.

Agitator ALT ATEX, marking II 1/2G... or II 1/2D..., size Ø60

Thread size	Lk
M10	50
M12	60
M16	80
M20	100

Ø shaft	L2 max	(M-HSL) max	CL
Ø30	274,5	29,5	8,275
Ø40	294,5	47,5	7,25
Ø50	325,5	47,5	7,3
Ø60	323	45	5,8
Ø70	327,5	45	8,325
Ø80	334,5	52	8,325
Ø90	334,5	52	5,825

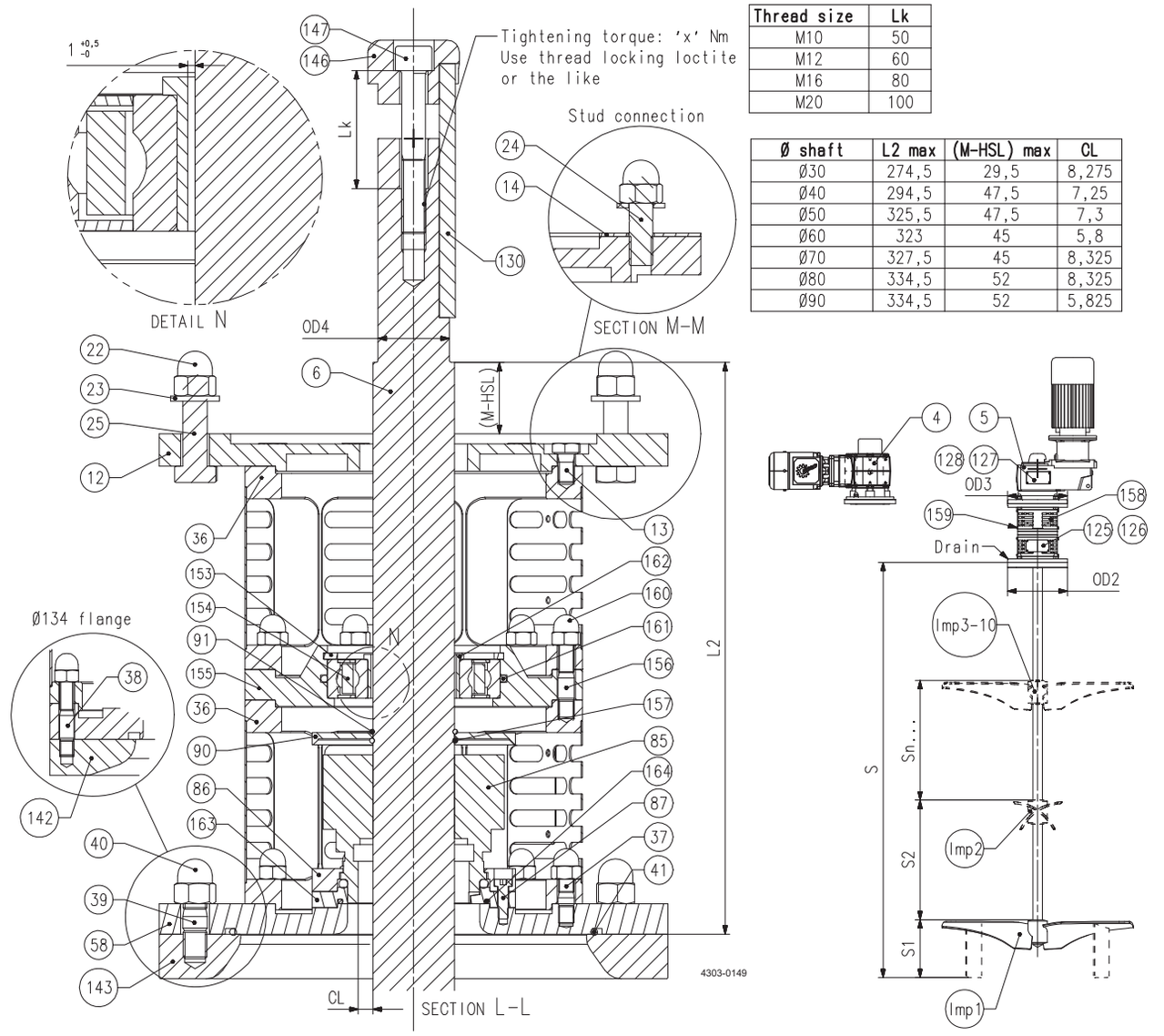

Screwed, with seal O-ring 4 point set screws (4PS)

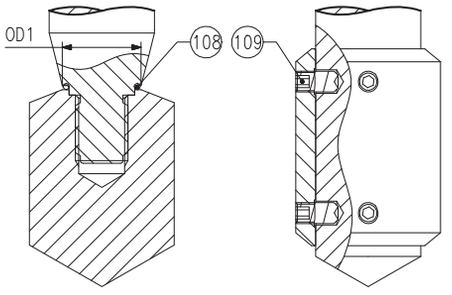

Prepered for welding (PFW)

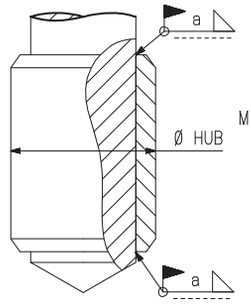

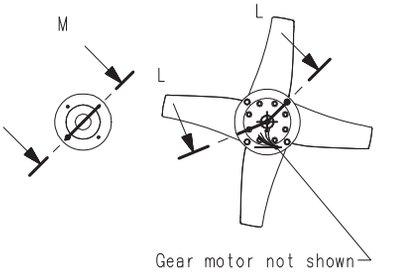

Pos	Qty	Denomination	size: ø60

Agitator ALT ATEX, marking II 1/2G... or II 1/2D..., size Ø60

Imp1	1	Impeller device, EnSaFoil (E125-E1900, D2(L), D3(L)) or Low Level (L600-L1700) or EnSaFerm (F450-F1900)	RI
Imp2-Imp10	1	Impeller device, EnSaFoil (E250-E1900, D2, D3) or EnSaFerm (F450-F1900)	RI

RI = Request Item. Article number available upon request by serial number or article number of the agitator.

		size: Ø60

Seal kits

□	Seal kit, S, C/SiC, EPDM	TE2613000046
♦	Seal kit, S, C/SiC, FPM	TE2613000036
▲	Seal kit, S, C/SiC, FFKM	9615453901

Agitator ALT ATEX, marking II 1/2G... or II 1/2D..., size Ø70

Thread size	Lk
M10	50
M12	60
M16	80
M20	100

Ø shaft	L2 max	(M-HSL) max	CL
Ø30	274,5	29,5	8,275
Ø40	294,5	47,5	7,25
Ø50	325,5	47,5	7,3
Ø60	323	45	5,8
Ø70	327,5	45	8,325
Ø80	334,5	52	8,325
Ø90	334,5	52	5,825

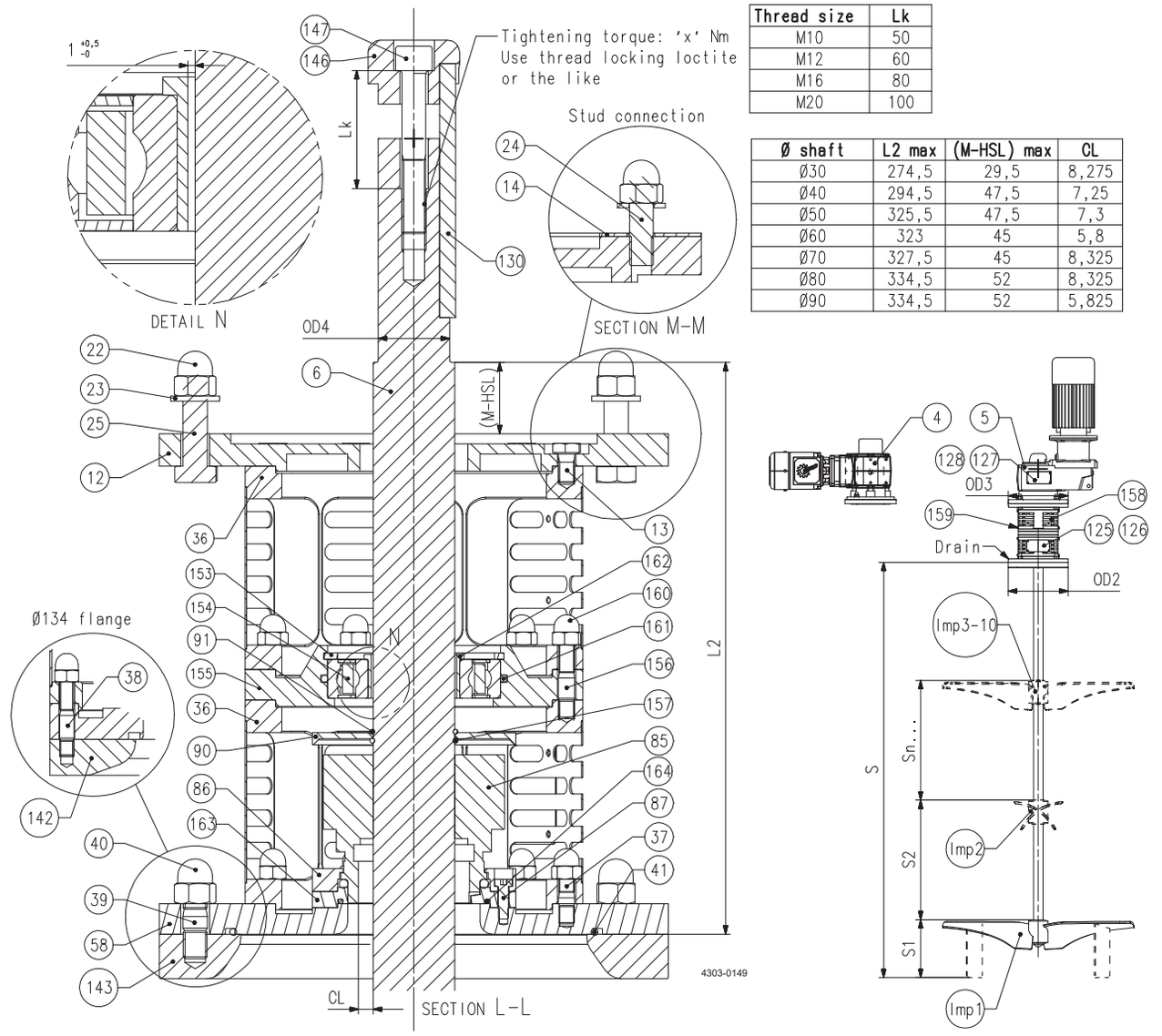

Screwed, with seal O-ring 4 point set screws (4PS)

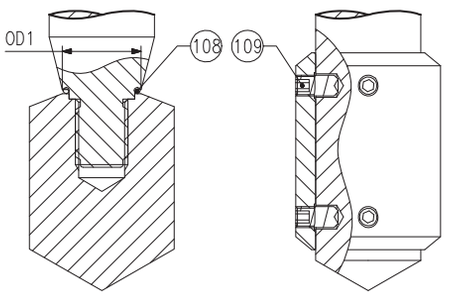

Prepered for welding (PFW)

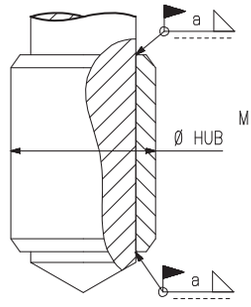

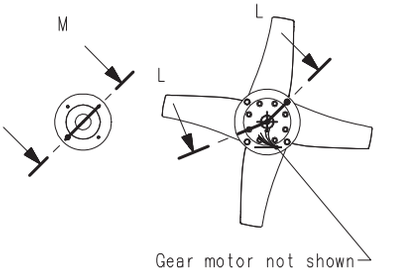

Pos		Qty	Denomination	size: Ø70
Agitator ALT ATEX, marking II 1/2G... or II 1/2D..., size Ø70				
4		1	GR gear motor, hollow shaft	RI
5		1	GP gear motor, hollow shaft	RI
6		1	Shaft	RI
12		1	Drive unit flange, (OD3=350), Sanitary / Industrial	TE26C3067000
		1	Drive unit flange, (OD3=350), UltraPure	TE26B3067000
13		12	Screw	TE2601000563
22		4	Cap nut (for flange OD3 = 350)	TE2601000058
23		4	Washer (for flange OD3 = 350)	TE2601000348
25		4	Screw (for flange OD3 = 350)	TE2601000052
36		2	Lantern, Sanitary / Industrial	TE26C4010980
		2	Lantern, UltraPure	TE26B5010980
37		12	Stud	TE2601000137
39		4	Stud (for flange AL, std. OD2=350)	TE2601000137
40		4	Cap nut (for flange AL, std. OD2=350)	TE2601000058
41		1	O-ring, FEP (for flange OD2=350)	TE2601000076
		1	O-ring, FEP (for flange OD2=395)	TE2601000163
		1	O-ring, FEP (for flange OD2=406,4)	TE2601000163
58		1	Mounting flange, AL, std. (OD2=350), Sanitary / Industrial	TE26C3087510
		1	Mounting flange, EN1092, std. (OD2=395), Sanitary / Industrial	TE26C3087550
		1	Mounting flange, ANSI, std. (OD2=406,4), Sanitary / Industrial	TE26C3076620
		1	Mounting flange, AL, std. (OD2=350), UltraPure	TE26B5087510
		1	Mounting flange, EN1092, std. (OD2=395), UltraPure	TE26B5087550
		1	Mounting flange, ANSI, std. (OD2=406,4), UltraPure	TE26B5076620
		1	Mounting flange, AL, std. (OD2=350), UltraPure w. E-polish	TE26A5087510
		1	Mounting flange, EN1092, std. (OD2=395), UltraPure w. E-polish	TE26A5087550
		1	Mounting flange, ANSI, std. (OD2=406,4), UltraPure w. E-polish	TE26A5076620
85	♦	1	S seal, C/SiC, FPM, ATEX II 1/2GD c TX *)	TE2602000331
	□	1	S seal, C/SiC, EPDM, ATEX II 1/2GD c TX *)	TE2602000332
	▲	1	S seal, C/SiC, FFKM, ATEX II 1/2GD c TX *)	9615452701
86		1	Ring, retainer	TE2604076630
87		4	Screw	TE2601000326
		4	Screw **)	9615452401
90		1	Oil trap	TE2604076710
91	□♦	1	O-ring	TE2601000039
108		1	O-ring, FEP (for shaft size OD1=25)	TE2601000243
		1	O-ring, FEP (for shaft size OD1=30)	TE2601000244
		1	O-ring, FEP (for shaft size OD1=35)	TE2601000245
		1	O-ring, FEP (for shaft size OD1=40)	TE2601000246
		1	O-ring, FEP (for shaft size OD1=45)	TE2601000247
		1	O-ring, FEP (for shaft size OD1=50)	TE2601000248
		1	O-ring, FEP (for shaft size OD1=55)	TE2601000249
		1	O-ring, FEP (for shaft size OD1=60)	TE2601000250
		1	O-ring, FEP (for shaft size OD1=65)	TE2601000189
		1	O-ring, FEP (for shaft size OD1=70)	TE2601000609
109		4/Imp	Screw, pointed, M12	TE2601000587
127		1	Name plate	9615273101
128		4	Rivet	TE2601000202
130		1	Parallel key	TE2601000662
146		1	Fixing element	9615269501
147		1	Screw	TE2601000663
153		1	Circlip, inner	9615430801
154		1	Bearing	9615431501
155		1	Flange, collision protection	9615427401
156		12	Stud	TE2601000588
157		1	Spring, ring	9615432601
158		4	Guard	9615384001
159		16	Screw	TE2601000031
160		24	Cap nut	TE2601000058
161		1	O-ring	TE2601000273
162		1	Sleeve	9615428305
163		1	Drive ring, stationary **)	9615451705
164		1	O-ring, FEP**)	9615452101

RI = Request Item. Article number available upon request by serial number or article number of the agitator.

*) The listed article numbers are for the complete seal. The seal-kit contains only the ceramic parts and elastomers.

**) Only to be used when seal elastomer for pos. 85 is FFKM.

Agitator ALT ATEX, marking II 1/2G... or II 1/2D..., size Ø70

Thread size	Lk
M10	50
M12	60
M16	80
M20	100

Ø shaft	L2 max	(M-HSL) max	CL
Ø30	274,5	29,5	8,275
Ø40	294,5	47,5	7,25
Ø50	325,5	47,5	7,3
Ø60	323	45	5,8
Ø70	327,5	45	8,325
Ø80	334,5	52	8,325
Ø90	334,5	52	5,825

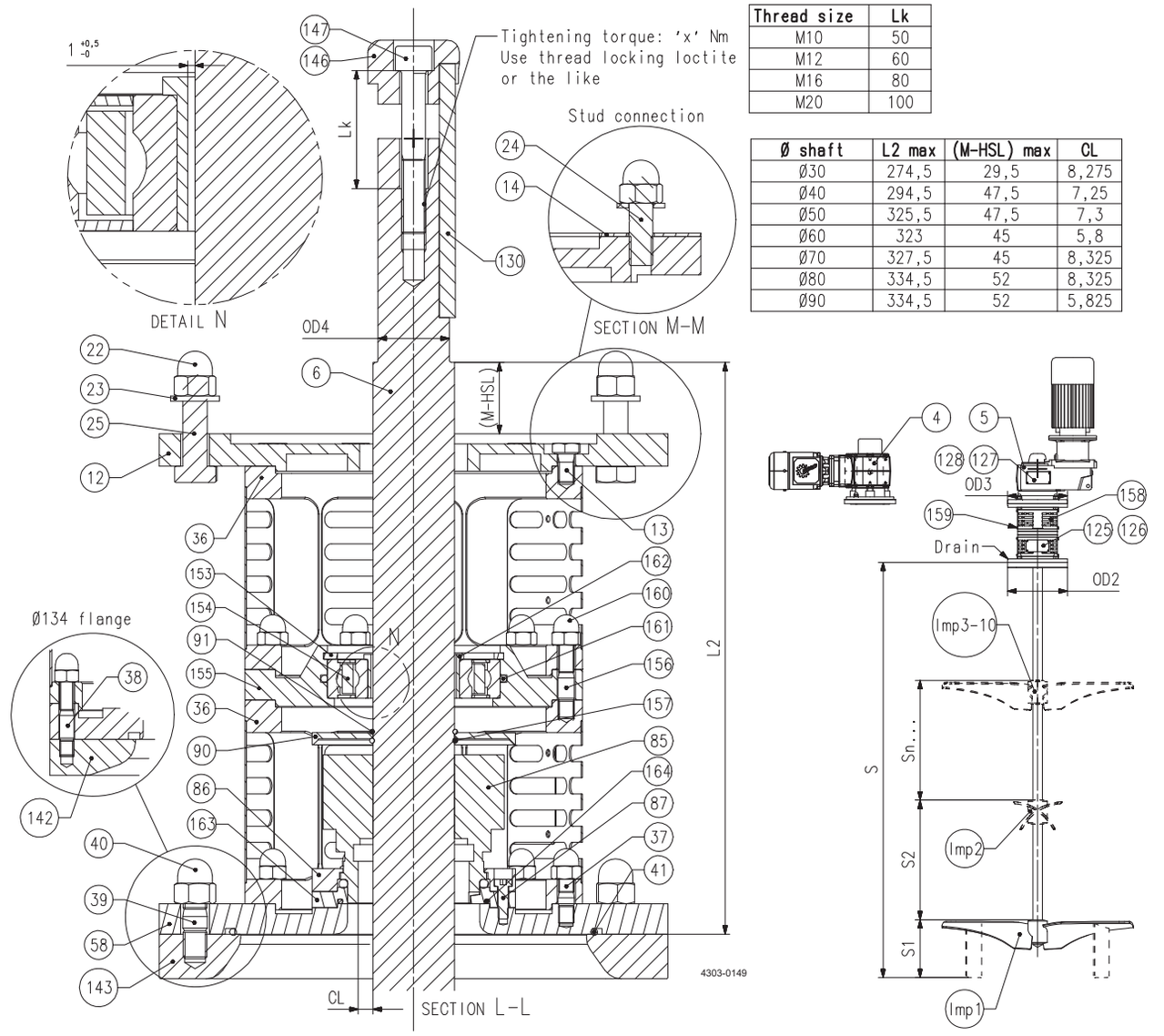

Screwed, with seal O-ring 4 point set screws (4PS)

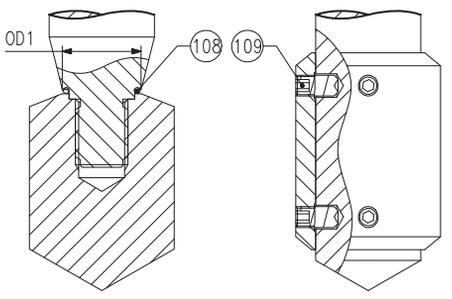

Prepered for welding (PFW)

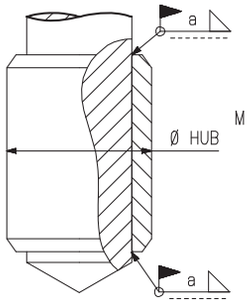

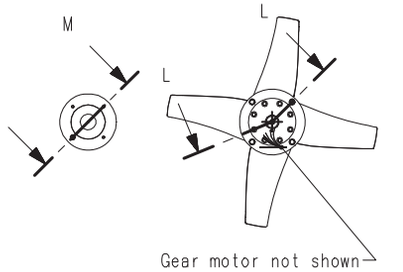

Pos	Qty	Denomination	size: Ø70

Agitator ALT ATEX, marking II 1/2G... or II 1/2D..., size Ø70

Imp1	1	Impeller device, EnSaFoil (E125-E1900, D2(L), D3(L)) or Low Level (L600-L1700) or EnSaFerm (F450-F1900)	RI
Imp2-Imp10	1	Impeller device, EnSaFoil (E250-E1900, D2, D3) or EnSaFerm (F450-F1900)	RI

RI = Request Item. Article number available upon request by serial number or article number of the agitator.

		size: Ø70

Seal kits

□	**Seal kit, S, C/SiC, EPDM**	**TE2613000047**
♦	**Seal kit, S, C/SiC, FPM**	**TE2613000037**
▲	**Seal kit, S, C/SiC, FFKM**	**9615454001**

Agitator ALT ATEX, marking II 1/2G... or II 1/2D..., size Ø80

Thread size	Lk
M10	50
M12	60
M16	80
M20	100

Ø shaft	L2 max	(M-HSL) max	CL
Ø30	274,5	29,5	8,275
Ø40	294,5	47,5	7,25
Ø50	325,5	47,5	7,3
Ø60	323	45	5,8
Ø70	327,5	45	8,325
Ø80	334,5	52	8,325
Ø90	334,5	52	5,825

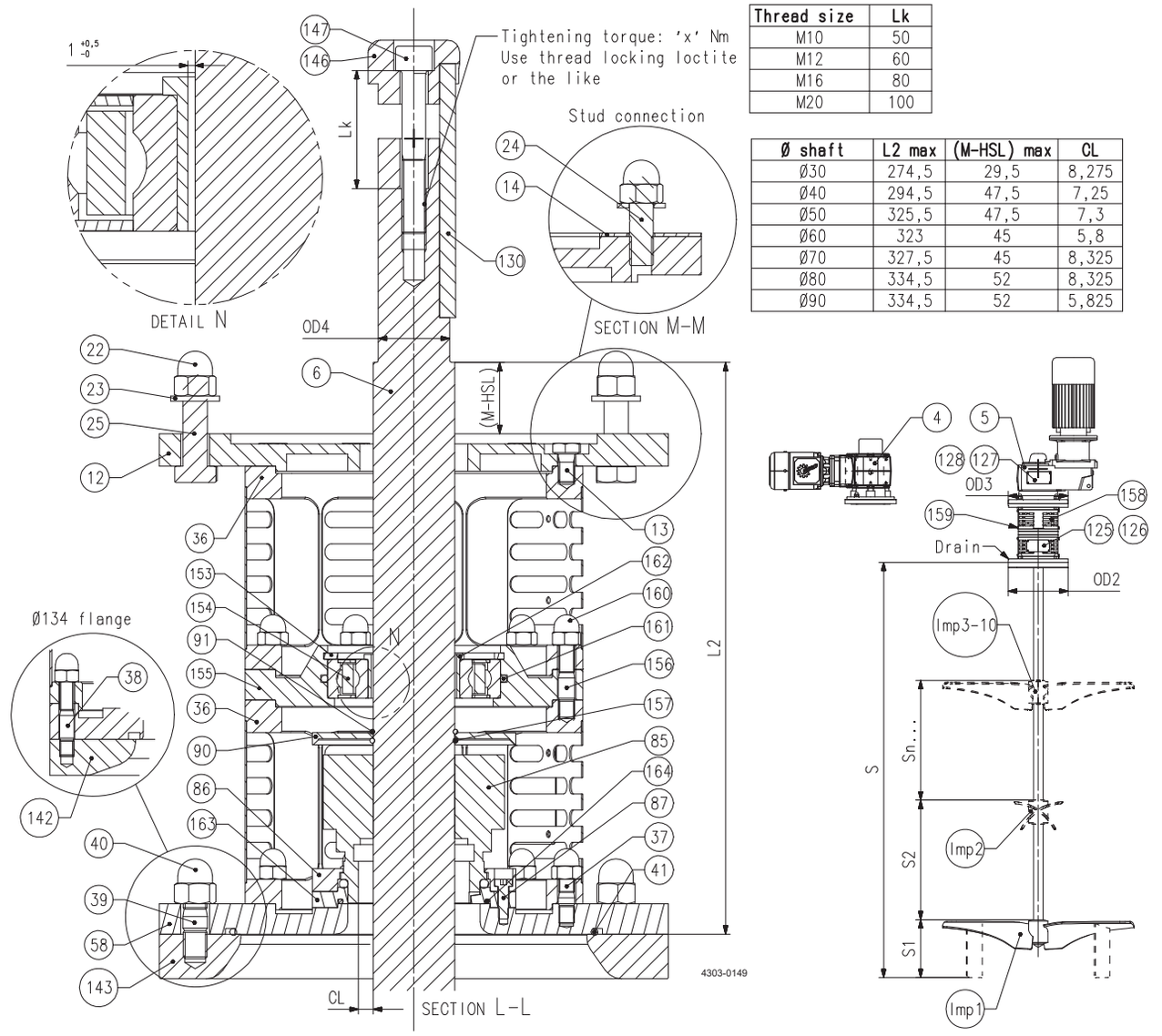

Screwed, with seal O-ring 4 point set screws (4PS)

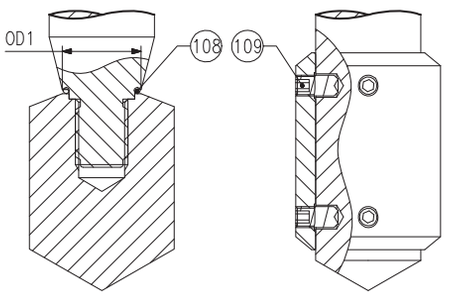

Prepered for welding (PFW)

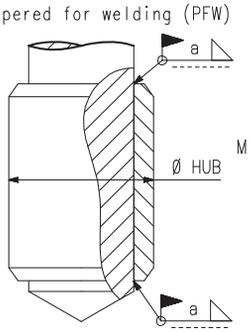

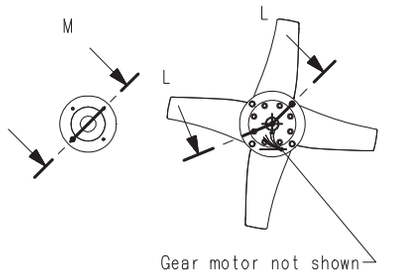

Pos	Qty	Denomination	size: Ø80

Agitator ALT ATEX, marking II 1/2G... or II 1/2D..., size Ø80

4	1	GR gear motor, hollow shaft	RI
5	1	GP gear motor, hollow shaft	RI
6	1	Shaft	RI
12	1	Drive unit flange, (OD3=400), Sanitary / Industrial	TE26C3067010
	1	Drive unit flange, (OD3=450), Sanitary / Industrial	TE26C3067020
	1	Drive unit flange, (OD3=400), UltraPure	TE26B3067010
	1	Drive unit flange, (OD3=450), UltraPure	TE26B3067020
13	12	Screw	TE2601000563
22	4	Cap nut (for flange OD3 = 400)	TE2601000058
	8	Cap nut (for flange OD3 = 450)	TE2601000058
23	4	Washer (for flange OD3 = 400)	TE2601000348
	8	Washer (for flange OD3 = 450)	TE2601000348
25	4	Screw (for flange OD3 = 400)	TE2601000052
	8	Screw (for flange OD3 = 450), length 65mm	TE2601000052
	8	Screw (for flange OD3 = 450), length 70mm	TE2601000601
36	2	Lantern, Sanitary / Industrial	TE26C4010980
	2	Lantern, UltraPure	TE26B5010980
37	12	Stud	TE2601000137
39	4	Stud (for flange AL, std. OD2=350)	TE2601000137
40	4	Cap nut (for flange AL, std. OD2=350)	TE2601000058
41	1	O-ring, FEP (for flange OD2=350)	TE2601000076
	1	O-ring, FEP (for flange OD2=395)	TE2601000163
58	1	Mounting flange, AL, std. (OD2=350), Sanitary / Industrial	TE26C3087520
	1	Mounting flange, EN1092, std. (OD2=395), Sanitary / Industrial	TE26C3087560
	1	Mounting flange, AL, std. (OD2=350), UltraPure	TE26B5087520
	1	Mounting flange, EN1092, std. (OD2=395), UltraPure	TE26B5087560
	1	Mounting flange, AL, std. (OD2=350), UltraPure w. E-polish	TE26A5087520
	1	Mounting flange, EN1092, std. (OD2=395), UltraPure w. E-polish	TE26A5087560
85 ♦	1	S seal, C/SiC, FPM, ATEX II 1/2GD c TX *)	TE2602000325
□	1	S seal, C/SiC, EPDM, ATEX II 1/2GD c TX *)	TE2602000333
▲	1	S seal, C/SiC, FFKM, ATEX II 1/2GD c TX *)	9615452801
86	1	Ring, retainer	TE260405343A
87	4	Screw	TE2601000326
	4	Screw **)	9615452401
90	1	Oil trap	TE2604034400
91 □♦	1	O-ring	TE2601000151
108	1	O-ring, FEP (for shaft size OD1=25)	TE2601000243
	1	O-ring, FEP (for shaft size OD1=30)	TE2601000244
	1	O-ring, FEP (for shaft size OD1=35)	TE2601000245
	1	O-ring, FEP (for shaft size OD1=40)	TE2601000246
	1	O-ring, FEP (for shaft size OD1=45)	TE2601000247
	1	O-ring, FEP (for shaft size OD1=50)	TE2601000248
	1	O-ring, FEP (for shaft size OD1=55)	TE2601000249
	1	O-ring, FEP (for shaft size OD1=60)	TE2601000250
	1	O-ring, FEP (for shaft size OD1=65)	TE2601000189
	1	O-ring, FEP (for shaft size OD1=70)	TE2601000609
	1	O-ring, FEP (for shaft size OD1=75)	TE2601000610
	1	O-ring, FEP (for shaft size OD1=80)	TE2601000611
109	4/Imp	Screw, pointed, M12	TE2601000206
127	1	Name plate	9615273101
128	4	Rivet	TE2601000202
130	1	Parallel key	9615378701
146	1	Fixing element	9615269507
147	1	Screw	TE2601000663
153	1	Circlip, inner	9615430901
154	1	Bearing	9615431601
155	1	Flange, collision protection	9615428101
156	12	Stud	TE2601000588
157	1	Spring, ring	9615432701
158	4	Guard	9615384001
159	16	Screw	TE2601000031
160	24	Cap nut	TE2601000058
161	1	O-ring	961541901
162	1	Sleeve	9615428306
163	1	Drive ring, stationary **)	9615451706
164	1	O-ring, FEP**)	9615452201

*) The listed article numbers are for the complete seal. The seal-kit contains only the ceramic parts and elastomers.

**) Only to be used when seal elastomer for pos. 85 is FFKM.

Agitator ALT ATEX, marking II 1/2G... or II 1/2D..., size Ø80

Thread size	Lk
M10	50
M12	60
M16	80
M20	100

Ø shaft	L2 max	(M-HSL) max	CL
Ø30	274,5	29,5	8,275
Ø40	294,5	47,5	7,25
Ø50	325,5	47,5	7,3
Ø60	323	45	5,8
Ø70	327,5	45	8,325
Ø80	334,5	52	8,325
Ø90	334,5	52	5,825

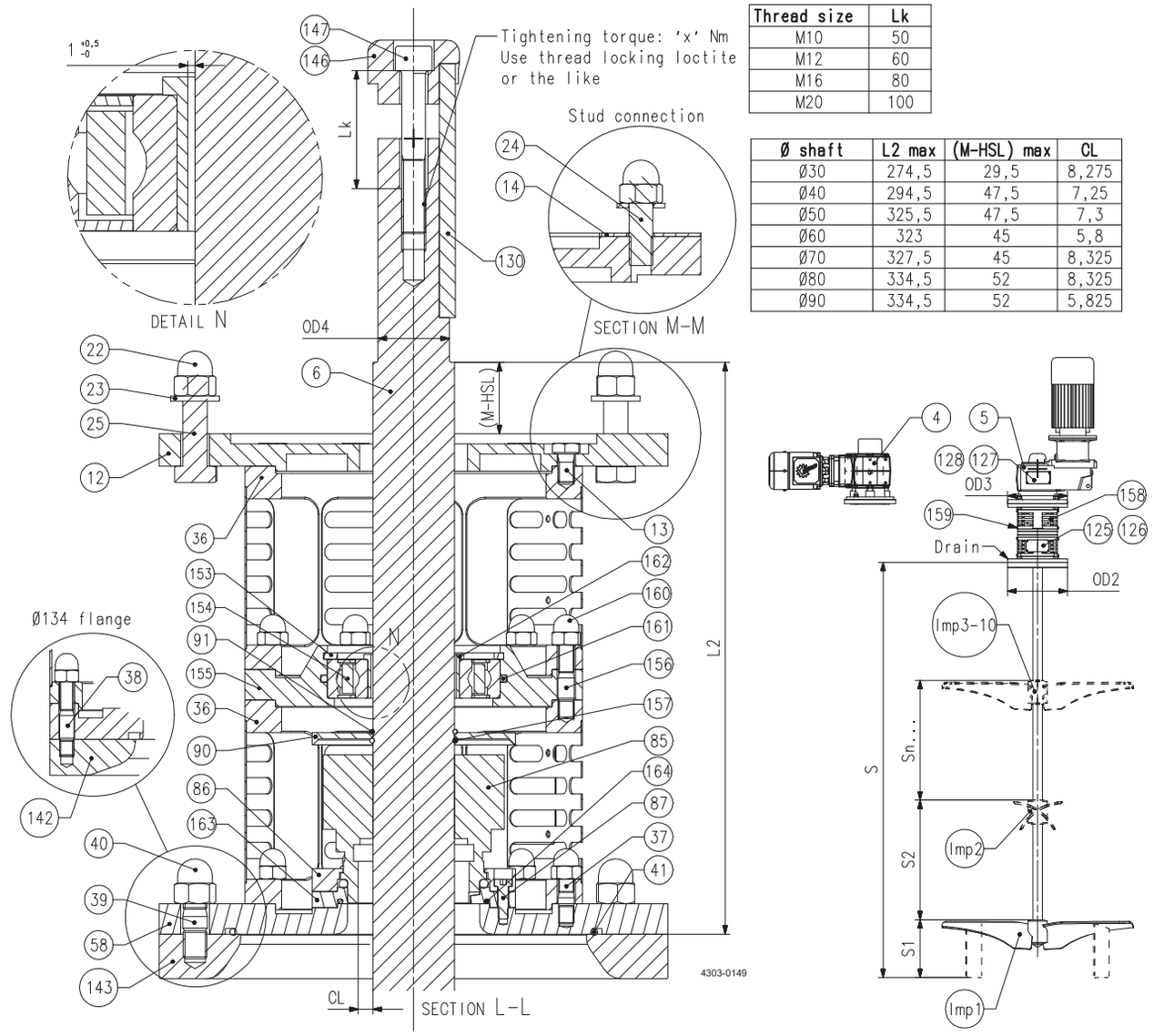

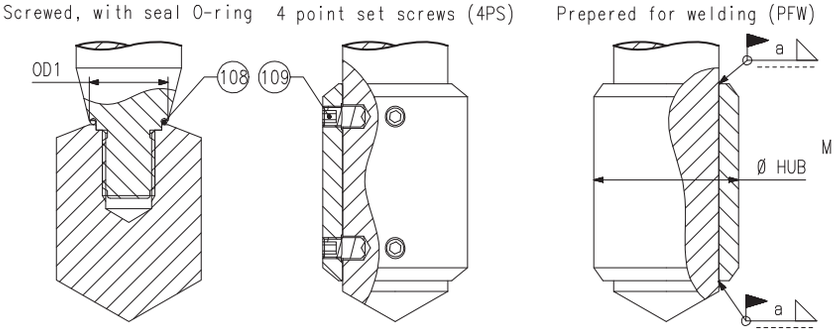

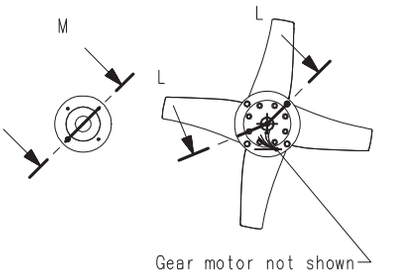

Pos	Qty	Denomination	size: Ø80
Agitator ALT ATEX, marking II 1/2G... or II 1/2D..., size Ø80			
Imp1	1	Impeller device, EnSaFoil (E125-E1900, D2(L), D3(L)) or Low Level (L600-L1700) or EnSaFerm (F450-F1900)	RI
Imp2-Imp10	1	Impeller device, EnSaFoil (E250-E1900, D2, D3) or EnSaFerm (F450-F1900)	RI

RI = Request Item. Article number available upon request by serial number or article number of the agitator.

		size: Ø80
Seal kits		
□	Seal kit, S, C/SiC, EPDM	TE2613000048
♦	Seal kit, S, C/SiC, FPM	TE2613000038
▲	Seal kit, S, C/SiC, FFKM	9615454101

Agitator ALT ATEX, marking II 1/2G... or II 1/2D..., size Ø90

Thread size	Lk
M10	50
M12	60
M16	80
M20	100

Ø shaft	L2 max	(M-HSL) max	CL
Ø30	274,5	29,5	8,275
Ø40	294,5	47,5	7,25
Ø50	325,5	47,5	7,3
Ø60	323	45	5,8
Ø70	327,5	45	8,325
Ø80	334,5	52	8,325
Ø90	334,5	52	5,825

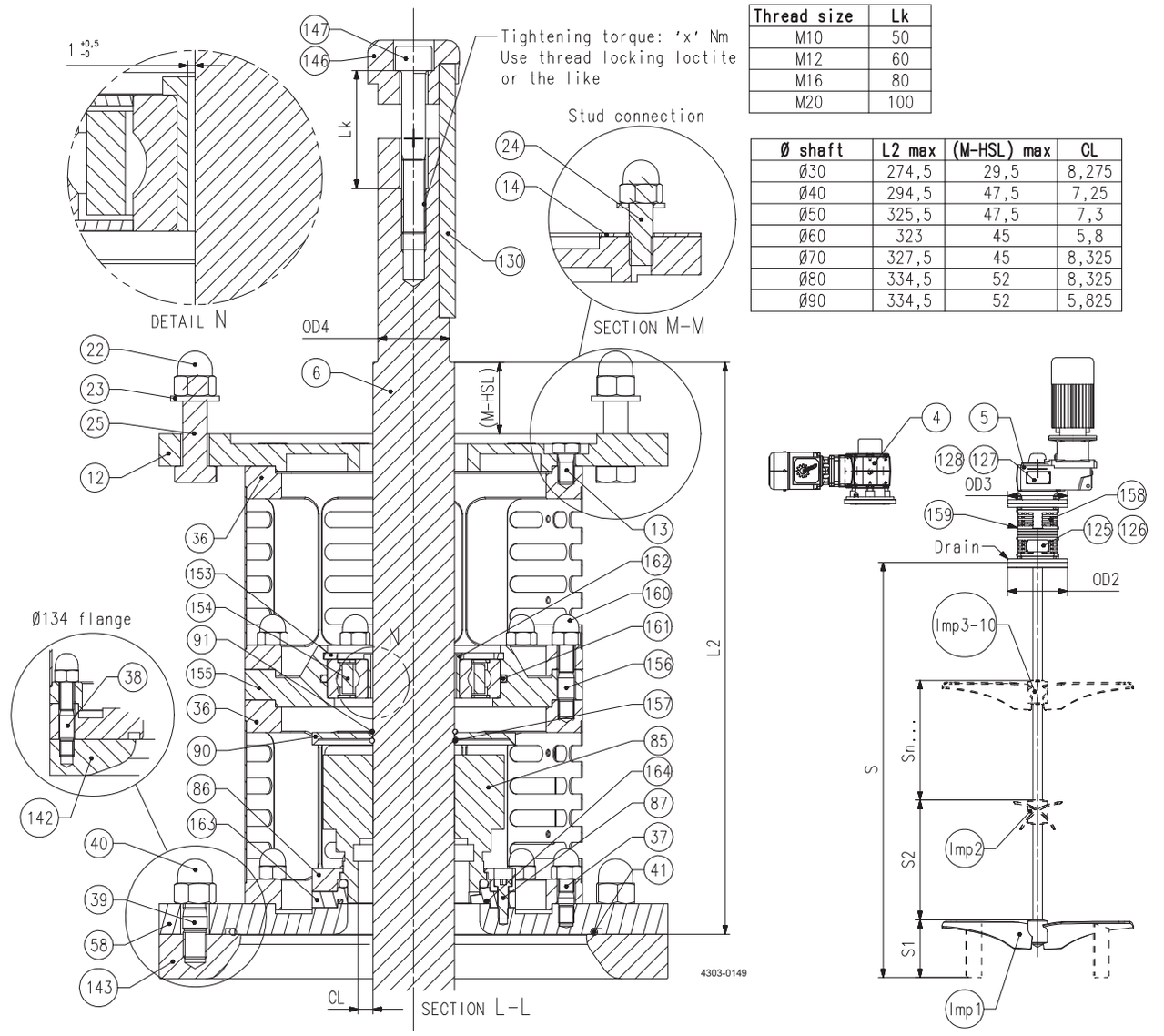

Screwed, with seal O-ring 4 point set screws (4PS)

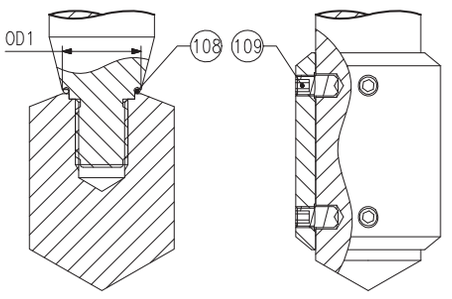

Prepered for welding (PFW)

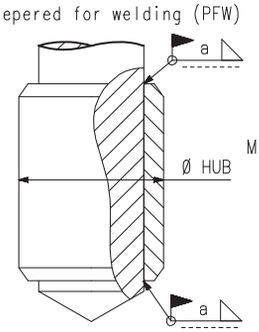

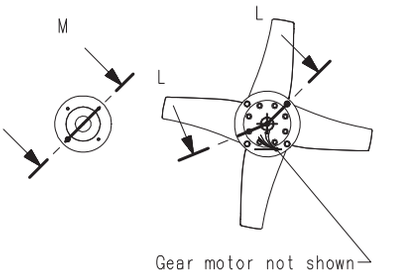

Pos		Qty	Denomination	size: Ø90

Agitator ALT ATEX, marking II 1/2G... or II 1/2D..., size Ø90

4		1	GR gear motor, hollow shaft	RI
5		1	GP gear motor, hollow shaft	RI
6		1	Shaft	RI
12		1	Drive unit flange, (OD3=450), Sanitary / Industrial	TE26C3067020
		1	Drive unit flange, (OD3=450), UltraPure	TE26B3067020
13		12	Screw	TE2601000563
22		8	Cap nut (for flange OD3 = 450)	TE2601000058
23		8	Washer (for flange OD3 = 450)	TE2601000348
25		8	Screw (for flange OD3 = 450), length 65mm	TE2601000052
		8	Screw (for flange OD3 = 450), length 70mm	TE2601000601
36		2	Lantern, Sanitary / Industrial	TE26C4010980
		2	Lantern, UltraPure	TE26B5010980
37		12	Stud	TE2601000137
39		4	Stud (for flange AL, std. OD2=350)	TE2601000137
40		4	Cap nut (for flange AL, std. OD2=350)	TE2601000058
41		1	O-ring, FEP (for flange OD2=350)	TE2601000076
		1	O-ring, FEP (for flange OD2=395)	TE2601000163
58		1	Mounting flange, AL, std. (OD2=350), Sanitary / Industrial	TE26C3087530
		1	Mounting flange, EN1092, std. (OD2=395), Sanitary / Industrial	TE26C3087570
		1	Mounting flange, AL, std. (OD2=350), UltraPure	TE26B5087530
		1	Mounting flange, EN1092, std. (OD2=395), UltraPure	TE26B5087570
		1	Mounting flange, AL, std. (OD2=350), UltraPure w. E-polish	TE26A5087530
		1	Mounting flange, EN1092, std. (OD2=395), UltraPure w. E-polish	TE26A5087570
85	♦	1	S seal, C/SiC, FPM, ATEX II 1/2GD c TX *)	TE2602000334
	□	1	S seal, C/SiC, EPDM, ATEX II 1/2GD c TX *)	TE2602000335
	▲	1	S seal, C/SiC, FFKM, ATEX II 1/2GD c TX *)	9615452901
86		1	Ring, retainer	TE260405635A
87		4	Screw	TE2601000326
		4	Screw **)	9615452401
90		1	Oil trap	TE2604034390
91	□♦	1	O-ring	TE2601000097
108		1	O-ring, FEP (for shaft size OD1=25)	TE2601000243
		1	O-ring, FEP (for shaft size OD1=30)	TE2601000244
		1	O-ring, FEP (for shaft size OD1=35)	TE2601000245
		1	O-ring, FEP (for shaft size OD1=40)	TE2601000246
		1	O-ring, FEP (for shaft size OD1=45)	TE2601000247
		1	O-ring, FEP (for shaft size OD1=50)	TE2601000248
		1	O-ring, FEP (for shaft size OD1=55)	TE2601000249
		1	O-ring, FEP (for shaft size OD1=60)	TE2601000250
		1	O-ring, FEP (for shaft size OD1=65)	TE2601000189
		1	O-ring, FEP (for shaft size OD1=70)	TE2601000609
		1	O-ring, FEP (for shaft size OD1=75)	TE2601000610
		1	O-ring, FEP (for shaft size OD1=80)	TE2601000611
		1	O-ring, FEP (for shaft size OD1=90)	TE2601000612
109		4/Imp	Screw, pointed, M12	TE2601000206
127		1	Name plate	9615273101
128		4	Rivet	TE2601000202
130		1	Parallel key	9615378901
146		1	Fixing element	9615269508
147		1	Screw	TE2601000663
153		1	Circlip, inner	9615431001
154		1	Bearing	9615431701
155		1	Flange, collision protection	9615428201
156		12	Stud	TE2601000588
157		1	Spring, ring	9615432801
158		4	Guard	9615384001
159		16	Screw	TE2601000031
160		24	Cap nut	TE2601000058
161		1	O-ring	9615432101
162		1	Sleeve	9615428307
163		1	Drive ring, stationary **)	9615451707
164		1	O-ring, FEP**)	9615452301

*) The listed article numbers are for the complete seal. The seal-kit contains only the ceramic parts and elastomers.

**) Only to be used when seal elastomer for pos. 85 is FFKM.

Agitator ALT ATEX, marking II 1/2G... or II 1/2D..., size Ø90

Thread size	Lk
M10	50
M12	60
M16	80
M20	100

Ø shaft	L2 max	(M-HSL) max	CL
Ø30	274,5	29,5	8,275
Ø40	294,5	47,5	7,25
Ø50	325,5	47,5	7,3
Ø60	323	45	5,8
Ø70	327,5	45	8,325
Ø80	334,5	52	8,325
Ø90	334,5	52	5,825

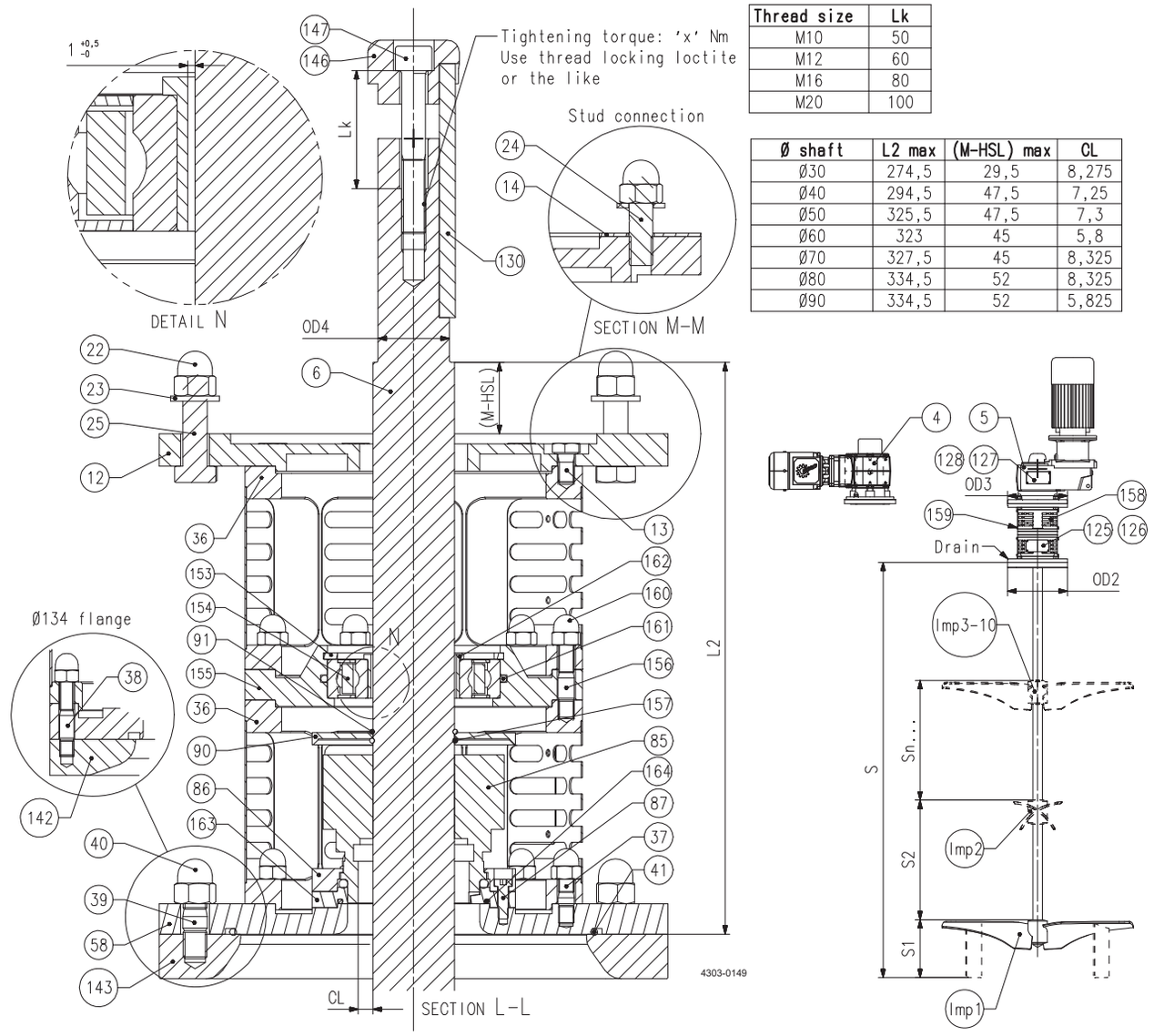

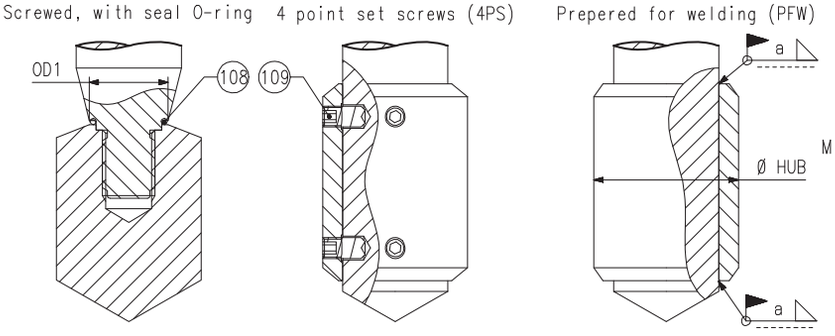

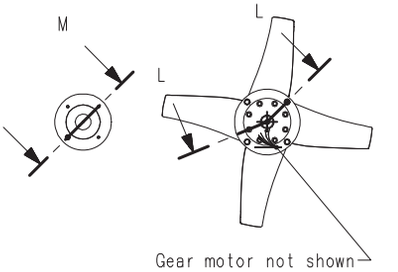

Pos	Qty	Denomination	size: Ø90
Agitator ALT ATEX, marking II 1/2G... or II 1/2D..., size Ø90			
Imp1	1	Impeller device, EnSaFoil (E125-E1900, D2(L), D3(L)) or Low Level (L600-L1700) or EnSaFerm (F450-F1900)	RI
Imp2-Imp10	1	Impeller device, EnSaFoil (E250-E1900, D2, D3) or EnSaFerm (F450-F1900)	RI

RI = Request Item. Article number available upon request by serial number or article number of the agitator.

		size: Ø90
Seal kits		
□	**Seal kit, S, C/SiC, EPDM**	**TE2613000049**
♦	**Seal kit, S, C/SiC, FPM**	**TE2613000039**
▲	**Seal kit, S, C/SiC, FFKM**	**9615454201**

Agitator ALT ATEX, marking II 2G... or II 2D..., size Ø30

Thread size	Lk
M10	50
M12	60
M16	80
M20	100

Ø shaft	L2 max	(M-HSL) max	CL
Ø30	159,5	29,5	8,275
Ø40	179,5	47,5	7,25
Ø50	200,5	47,5	7,3
Ø60	198	45	5,8
Ø70	202,5	45	8,325
Ø80	209,5	52	8,325
Ø90	209,5	52	5,825

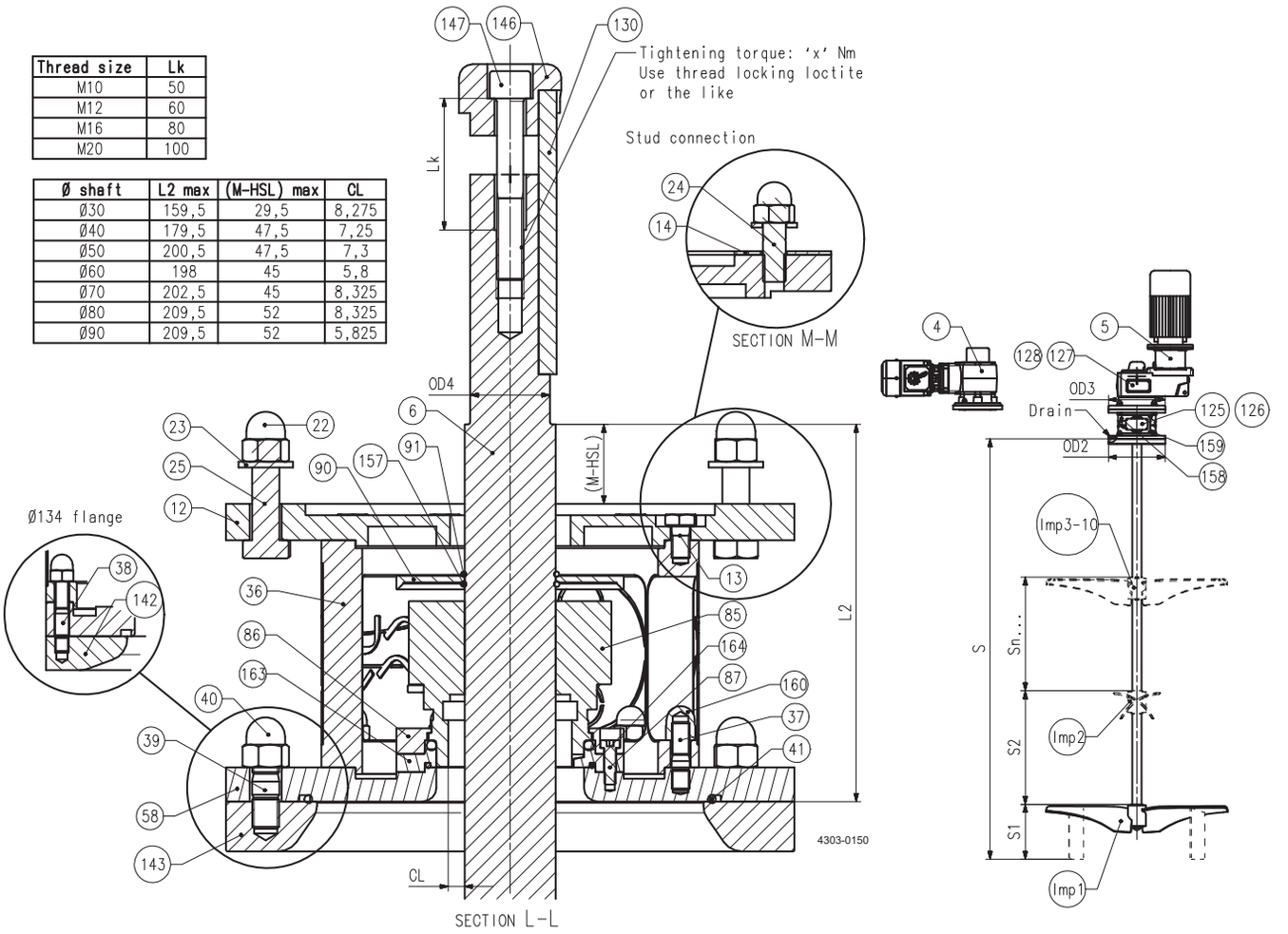

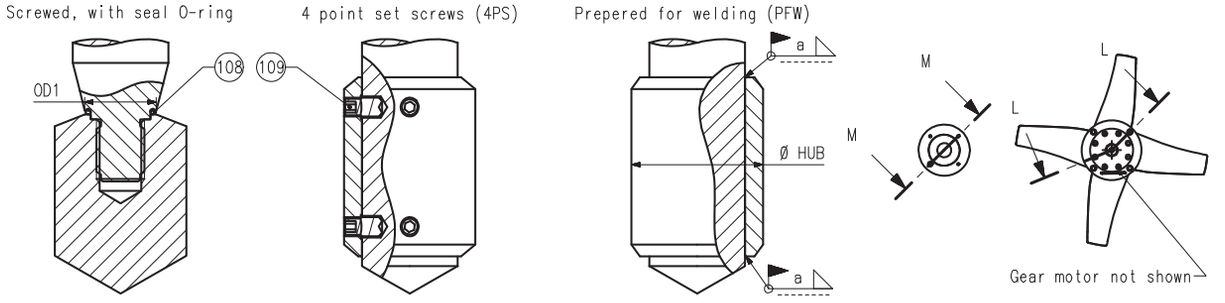

Pos		Qty	Denomination	size: Ø30
Agitator ALT ATEX, marking II 2G... or II 2D..., size Ø30				
4		1	GR gear motor, hollow shaft	RI
5		1	GP gear motor, hollow shaft	RI
6		1	Shaft	RI
12		1	Drive unit flange, (OD3=140), Sanitary / Industrial	TE26C3066960
		1	Drive unit flange, (OD3=160), Sanitary / Industrial	TE26C306016A
		1	Drive unit flange, (OD3=140), UltraPure	TE26B3066960
		1	Drive unit flange, (OD3=160), UltraPure	TE26B306016A
13		8	Screw	TE2601000098
22		4	Cap nut (for flange OD3 = 140)	TE2601000263
		4	Cap nut (for flange OD3 = 160)	TE2601000263
23		4	Washer (for flange OD3 = 140)	TE2601000349
		4	Washer (for flange OD3 = 160), height 2,5mm	TE2601094010
24		4	Stud (for flange OD3 = 140)	TE2601000312
		4	Stud (for flange OD3 = 160)	TE2601000034
36		2	Lantern, Sanitary / Industrial	TE26C401095A
		2	Lantern, UltraPure	TE26B501095A
37		8	Stud	TE2601000311
38		8	Stud	TE2601000112
39		4	Stud (for flange AL, std. OD2=200)	TE2601000307
40		4	Cap nut (for flange AL, std. OD2=200)	TE2601000355
41		1	O-ring, FEP (for flange AL, std. OD2=134)	TE2601000078
		1	O-ring, FEP (for flange AL, std. OD2=200)	TE2601000073
		1	O-ring, FEP (for flange EN1092, std. OD2=200)	TE2601000072
		1	O-ring, FEP (for flange EN1092, std. OD2=220)	TE2601000073
58		1	Mounting flange, AL, std. (OD2=134), Sanitary / Industrial	TE26C3071740
		1	Mounting flange, AL, std. (OD2=200), Sanitary / Industrial	TE26C306655A
		1	Mounting flange, EN1092-std. (OD2=200), Sanitary / Industrial	TE26C3068960
		1	Mounting flange, EN1092, std. (OD2=220), Sanitary / Industrial	TE26C306154B
		1	Mounting flange, AL, std. (OD2=134), UltraPure	TE26B5071740
		1	Mounting flange, AL, std. (OD2=200), UltraPure	TE26B506655A
		1	Mounting flange, EN1092-std. (OD2=200), UltraPure	TE26B5068960
		1	Mounting flange, EN1092, std. (OD2=220), UltraPure	TE26B506154B
		1	Mounting flange, AL, std. (OD2=134), UltraPure w. E-polish	TE26A5071740
		1	Mounting flange, AL, std. (OD2=200), UltraPure w. E-polish	TE26A506655A
		1	Mounting flange, EN1092-std. (OD2=200), UltraPure w. E-polish	TE26A5068960
		1	Mounting flange, EN1092, std. (OD2=220), UltraPure w. E-polish	TE26A506154B
85	♦	1	S seal, C/SiC, FPM, ATEX II 2GD c TX *)	TE2602000303
	□	1	S seal, C/SiC, EPDM, ATEX II 2GD c TX *)	TE2602000305
	▲	1	S seal, C/SiC, FFKM, ATEX II 2GD c TX *)	9615453001
86		1	Ring, retainer	TE260406156C
87		4	Screw	TE2601000326
90		1	Oil trap	TE2604061570
91	□♦	1	O-ring	TE2601000287
108		1	O-ring, FEP (for shaft size OD1=25)	TE2601000243
		1	O-ring, FEP (for shaft size OD1=30)	TE2601000244
109		4/Imp	Screw, pointed, M6	TE2601000357
		4/Imp	Screw, pointed, M8	TE2601000358
		4/Imp	Screw, pointed, M10	TE2601000015
		4/Imp	Screw, pointed, M12	TE2601000212
125		1	Name plate	9615273101
126		4	Rivet	TE2601000391
130		1	Parallel key	9615362101
146		1	Fixing element	9615269506
147		1	Screw	9615362001
157		1	Spring, ring	9615432201
158		2	Guard	9615272801
159		8	Screw	TE2601000031
160		8	Cap nut	TE2601000262
163		1	Drive ring, stationary **)	9615451701
164		1	O-ring, FEP **)	TE2601000189
87		4	Screw **)	9615452401

RI = Request Item. Article number available upon request by serial number or article number of the agitator.

*) The listed article numbers are for the complete seal. The seal-kit contains only the ceramic parts and elastomers.

**) Only to be used when seal elastomer for pos. 85 is FFKM.

Agitator ALT ATEX, marking II 2G... or II 2D..., size Ø30

Thread size	Lk
M10	50
M12	60
M16	80
M20	100

Ø shaft	L2 max	(M-HSL) max	CL
Ø30	159,5	29,5	8,275
Ø40	179,5	47,5	7,25
Ø50	200,5	47,5	7,3
Ø60	198	45	5,8
Ø70	202,5	45	8,325
Ø80	209,5	52	8,325
Ø90	209,5	52	5,825

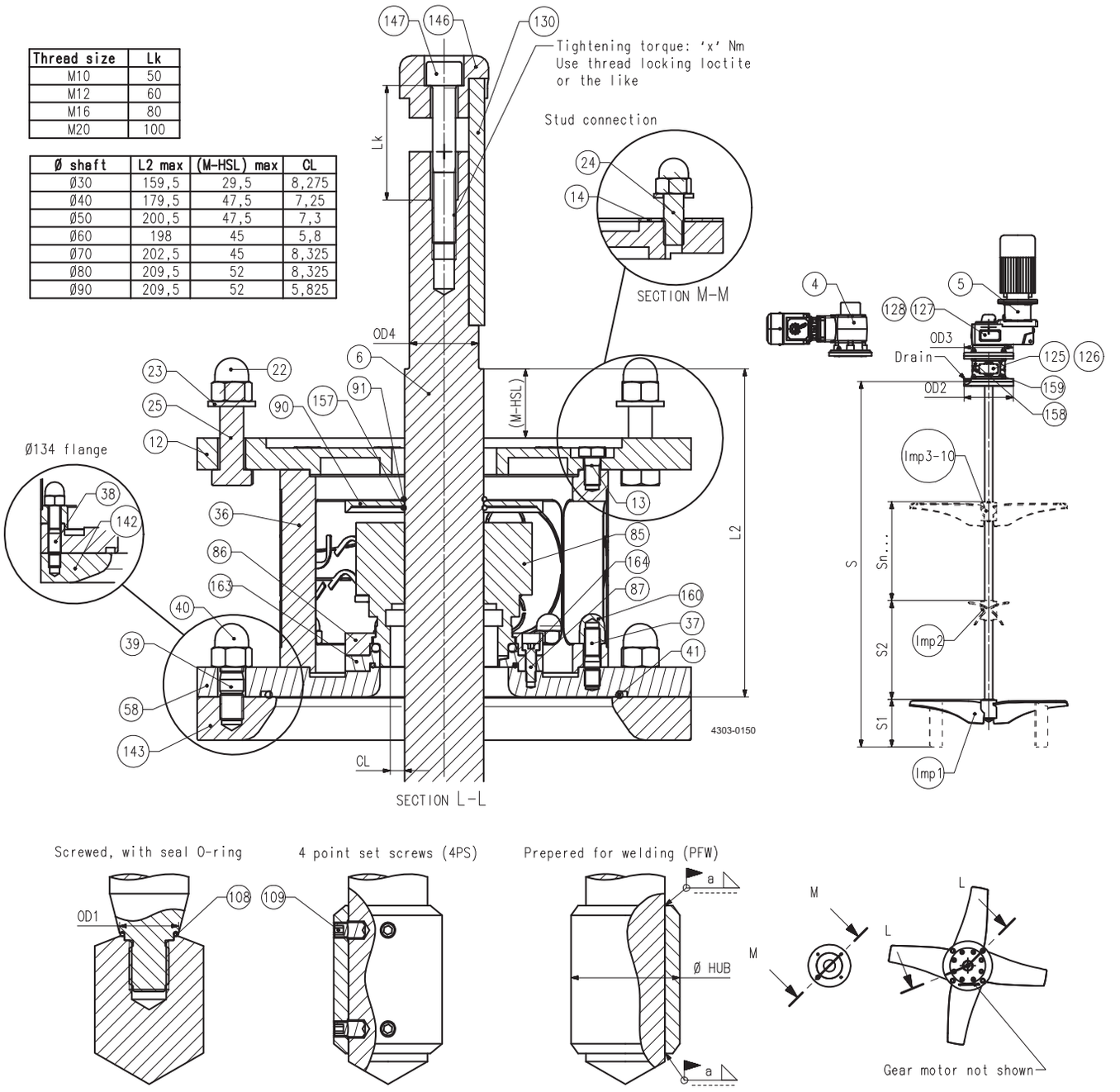

Pos	Qty	Denomination	size: Ø30

Agitator ALT ATEX, marking II 2G... or II 2D..., size Ø30

Imp1	1	Impeller device, EnSaFoil (E125-E1900, D2(L), D3(L)) or Low Level (L600-L1700) or EnSaFerm (F450-F1900)	RI
Imp2-Imp10	1	Impeller device, EnSaFoil (E250-E1900, D2, D3) or EnSaFerm (F450-F1900)	RI

RI = Request Item. Article number available upon request by serial number or article number of the agitator.

		size: Ø30

Seal kits

□	**Seal kit, S, C/SiC, EPDM**	**TE2613000040**
♦	**Seal kit, S, C/SiC, FPM**	**TE2613000031**
▲	**Seal kit, S, C/SiC, FFKM**	**TE2613000302**

Agitator ALT ATEX, marking II 2G... or II 2D..., size Ø40

Thread size	Lk
M10	50
M12	60
M16	80
M20	100

Ø shaft	L2 max	(M-HSL) max	CL
Ø30	159,5	29,5	8,275
Ø40	179,5	47,5	7,25
Ø50	200,5	47,5	7,3
Ø60	198	45	5,8
Ø70	202,5	45	8,325
Ø80	209,5	52	8,325
Ø90	209,5	52	5,825

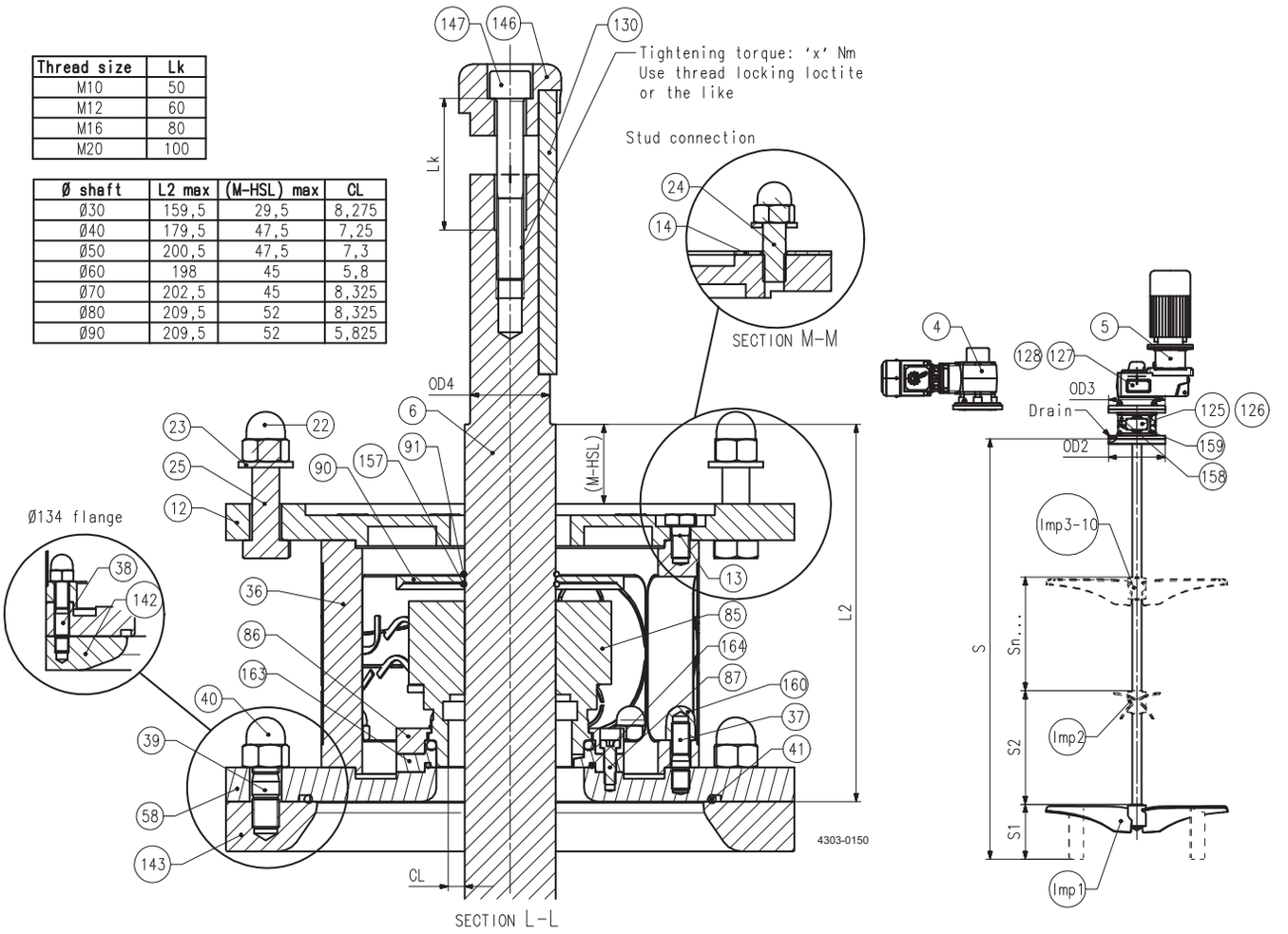

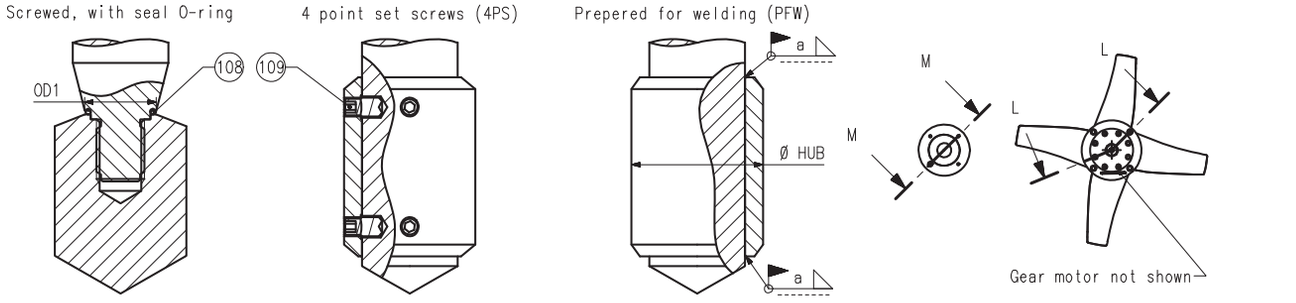

Pos	Qty	Denomination	size: Ø40
Agitator ALT ATEX, marking II 2G... or II 2D..., size Ø40			
4	1	GR gear motor, hollow shaft	RI
5	1	GP gear motor, hollow shaft	RI
6	1	Shaft	RI
12	1	Drive unit flange, (OD3=200), Sanitary / Industrial	TE26C304913A
	1	Drive unit flange, (OD3=250), Sanitary / Industrial	TE26C306126A
	1	Drive unit flange, (OD3=200), UltraPure	TE26B304913A
	1	Drive unit flange, (OD3=250), UltraPure	TE26B306126A
13	8	Screw	TE2601000554
22	4	Cap nut (for flange OD3 = 200)	TE2601000355
23	4	Washer (for flange OD3 = 200)	TE2601000346
	4	Washer (for flange OD3 = 250)	TE2601000347
	4	Washer (for flange OD3 = 250), height 4mm	TE2601094060
24	4	Stud (for flange OD3 = 200)	TE2601000307
25	4	Screw (for flange OD3 = 250), length 45mm	TE2601000342
	4	Screw (for flange OD3 = 250), length 50mm	TE2601000531
36	2	Lantern, Sanitary / Industrial	TE26C4010110
	2	Lantern, UltraPure	TE26B5010110
37	8	Stud	TE2601000312
39	4	Stud (for flange AL, std. OD2=250)	TE2601000309
40	4	Cap nut (for flange AL, std. OD2=250)	TE2601000261
41	1	O-ring, FEP (for flange OD2=250)	TE2601000074
	1	O-ring, FEP (for flange OD2=285)	TE2601000074
58	1	Mounting flange, AL, std. (OD2=250), Sanitary / Industrial	TE26C3069460
	1	Mounting flange, EN1092, std. (OD2=250), Sanitary / Industrial	TE26C3068980
	1	Mounting flange, EN1092, std. (OD2=285), Sanitary / Industrial	TE26C3070940
	1	Mounting flange, AL, std. (OD2=250), UltraPure	TE26B5069460
	1	Mounting flange, EN1092, std. (OD2=250), UltraPure	TE26B5068980
	1	Mounting flange, EN1092, std. (OD2=285), UltraPure	TE26B5070940
	1	Mounting flange, AL, std. (OD2=250), UltraPure w. E-polish	TE26A5069460
	1	Mounting flange, EN1092, std. (OD2=250), UltraPure w. E-polish	TE26A5068980
	1	Mounting flange, EN1092, std. (OD2=285), UltraPure w. E-polish	TE26A5070940
85 ♦	1	S seal, C/SiC, FPM, ATEX II 2GD c TX *)	TE2602000306
□	1	S seal, C/SiC, EPDM, ATEX II 2GD c TX *)	TE2602000309
▲	1	S seal, C/SiC, FFKM, ATEX II 2GD c TX *)	9615453101
86	1	Ring, retainer	TE260405177B
87	4	Screw	TE2601000326
	4	Screw **)	9615452401
90	1	Oil trap	TE2604055860
91 □♦	1	O-ring	TE2601000292
108	1	O-ring, FEP (for shaft size OD1=25)	TE2601000243
	1	O-ring, FEP (for shaft size OD1=30)	TE2601000244
	1	O-ring, FEP (for shaft size OD1=35)	TE2601000245
	1	O-ring, FEP (for shaft size OD1=40)	TE2601000246
109	4/Imp	Screw, pointed, M8	TE2601000358
	4/Imp	Screw, pointed, M10	TE2601000015
	4/Imp	Screw, pointed, M12	TE2601000212
125	1	Name plate	9615273101
126	4	Rivet	TE2601000391
130	1	Parallel key (for shaft OD4=30)	9615362101
	1	Parallel key (for shaft OD4=35)	9615316901
146	1	Fixing element (for shaft OD4=30)	9615269503
	1	Fixing element (for shaft OD4=35)	9615269504
147	1	Screw (for shaft OD4=30)	9615362001
	1	Screw (for shaft OD4=35)	9615317001
157	1	Spring, ring	9615432301
158	2	Guard	9615316701
159	8	Screw	TE2601000031
160	8	Cap nut	TE2601000263
163	1	Drive ring, stationary **)	9615451702
164	1	O-ring, FEP **)	TE2601000610

RI = Request Item. Article number available upon request by serial number or article number of the agitator.

*) The listed article numbers are for the complete seal. The seal-kit contains only the ceramic parts and elastomers.

**) Only to be used when seal elastomer for pos. 85 is FFKM.

Agitator ALT ATEX, marking II 2G... or II 2D..., size Ø40

Thread size	Lk
M10	50
M12	60
M16	80
M20	100

Ø shaft	L2 max	(M-HSL) max	CL
Ø30	159,5	29,5	8,275
Ø40	179,5	47,5	7,25
Ø50	200,5	47,5	7,3
Ø60	198	45	5,8
Ø70	202,5	45	8,325
Ø80	209,5	52	8,325
Ø90	209,5	52	5,825

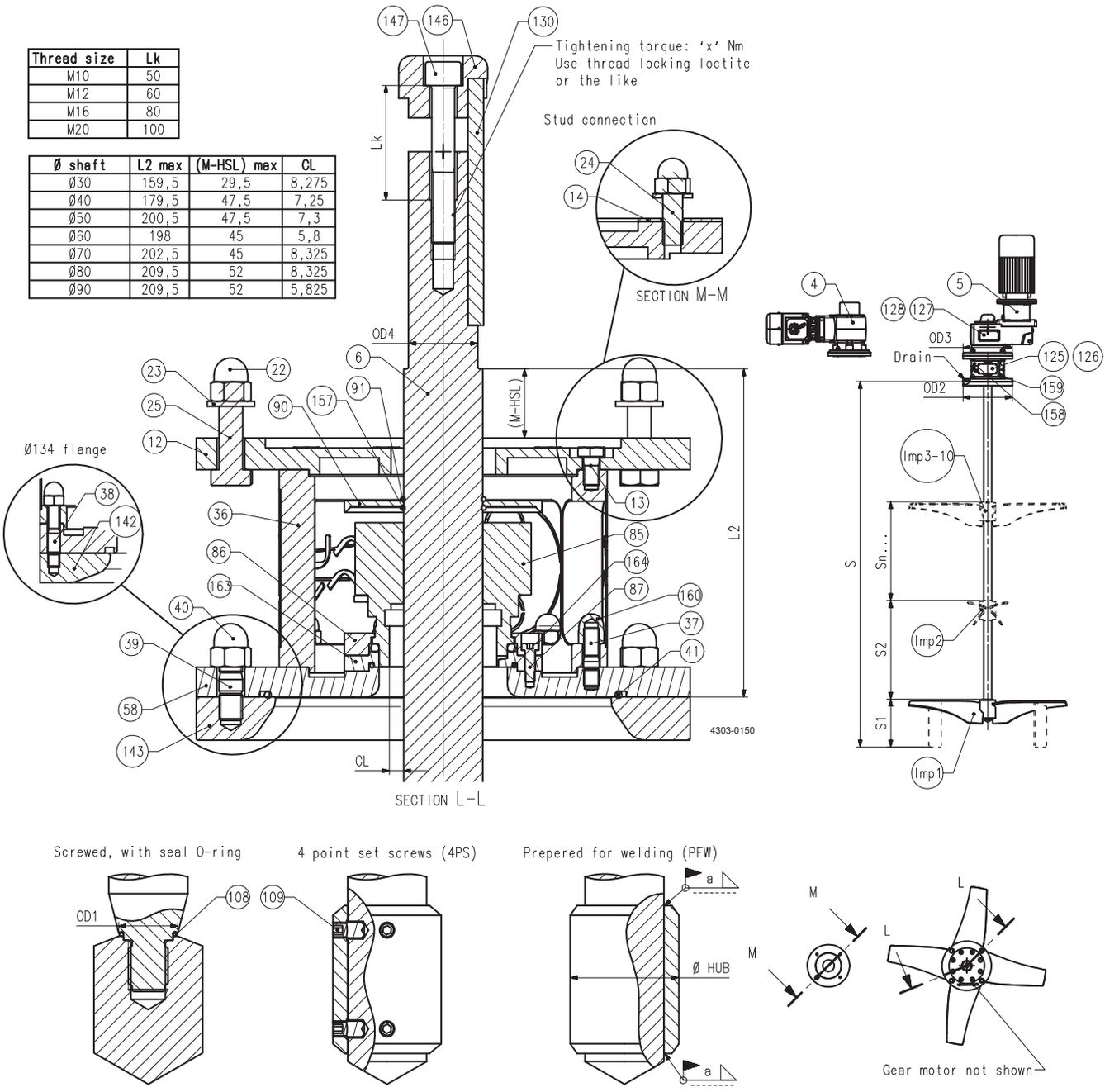

Pos	Qty	Denomination	size: Ø40

Agitator ALT ATEX, marking II 2G... or II 2D..., size Ø40

Imp1	1	Impeller device, EnSaFoil (E125-E1900, D2(L), D3(L)) or Low Level (L600-L1700) or EnSaFerm (F450-F1900)	RI
Imp2-Imp10	1	Impeller device, EnSaFoil (E250-E1900, D2, D3) or EnSaFerm (F450-F1900)	RI

RI = Request Item. Article number available upon request by serial number or article number of the agitator.

		size: Ø40

Seal kits

□	Seal kit, S, C/SiC, EPDM	TE2613000042
♦	Seal kit, S, C/SiC, FPM	TE2613000033
▲	Seal kit, S, C/SiC, FFKM	TE2613000314

Agitator ALT ATEX, marking II 2G... or II 2D..., size Ø50

Thread size	Lk
M10	50
M12	60
M16	80
M20	100

Ø shaft	L2 max	(M-HSL) max	CL
Ø30	159,5	29,5	8,275
Ø40	179,5	47,5	7,25
Ø50	200,5	47,5	7,3
Ø60	198	45	5,8
Ø70	202,5	45	8,325
Ø80	209,5	52	8,325
Ø90	209,5	52	5,825

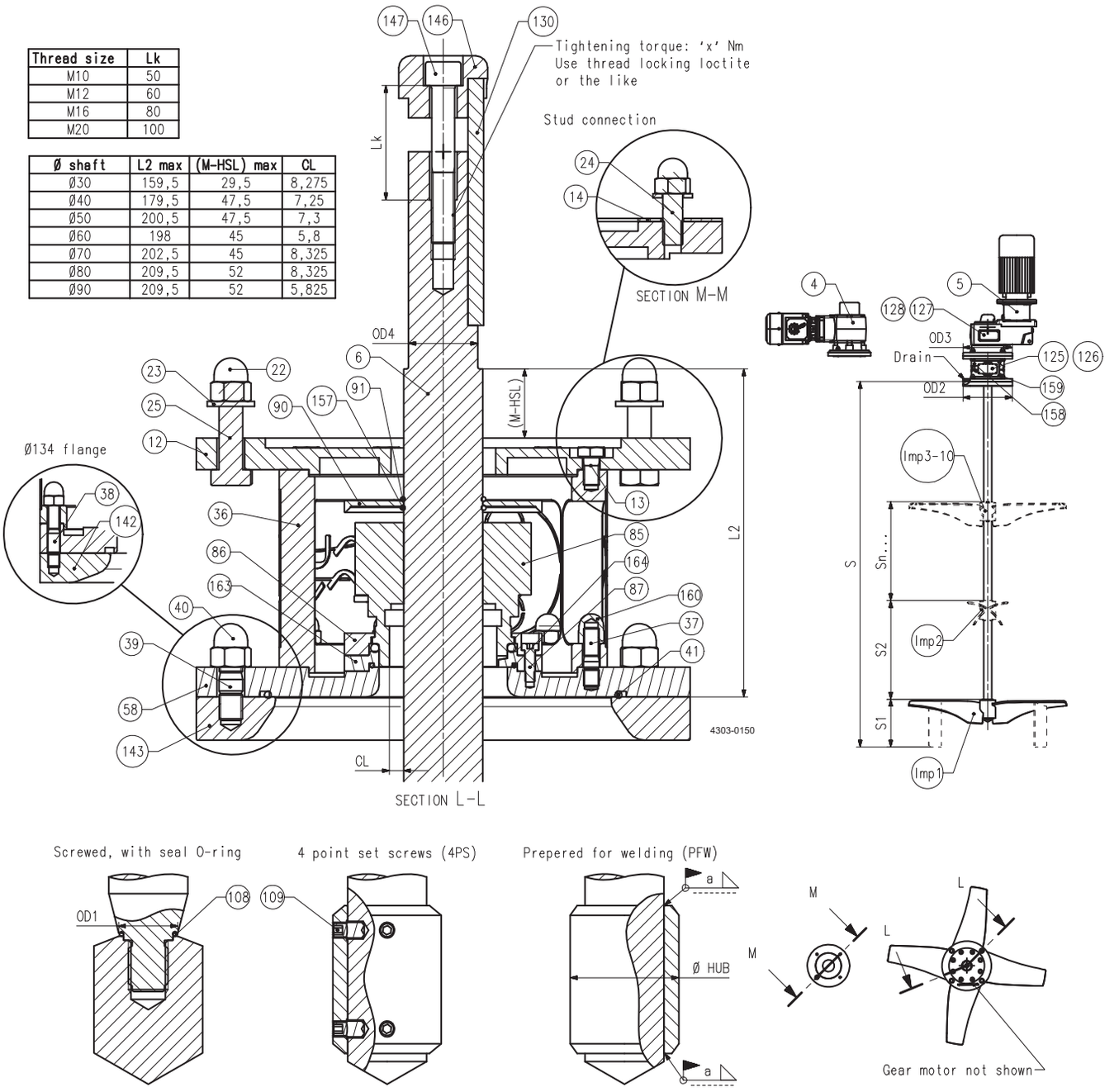

Pos		Qty	Denomination	size: ø50
Agitator ALT ATEX, marking II 2G... or II 2D..., size Ø50				
4		1	GR gear motor, hollow shaft	RI
5		1	GP gear motor, hollow shaft	RI
6		1	Shaft	RI
12		1	Drive unit flange, (OD3=200), Sanitary / Industrial	TE26C3093800
		1	Drive unit flange, (OD3=250), Sanitary / Industrial	TE26C3065470
		1	Drive unit flange, (OD3=300), Sanitary / Industrial	TE26C303769A
		1	Drive unit flange, (OD3=200), UltraPure	TE26B3093800
		1	Drive unit flange, (OD3=250), UltraPure	TE26B3065470
		1	Drive unit flange, (OD3=300), UltraPure	TE26B303769A
13		8	Screw	TE2601000562
14		1	Disc spacer (for flange OD3=200)	TE2603093820
22		4	Cap nut (for flange OD3 = 200)	TE2601000355
		4	Cap nut (for flange OD3 = 300)	TE2601000261
23		4	Washer (for flange OD3 = 200)	TE2601000346
		4	Washer (for flange OD3 = 250)	TE2601000347
		4	Washer (for flange OD3 = 300)	TE2601000347
24		4	Stud (for flange OD3 = 200)	TE2601000307
		4	Stud (for flange OD3 = 250), length 30mm	TE2601000310
		4	Stud (for flange OD3 = 250), length 35mm	TE2601000393
25		4	Screw (for flange OD3 = 300)	TE2601000016
36		2	Lantern, Sanitary / Industrial	TE26C4010960
		2	Lantern, UltraPure	TE26B5010960
37		8	Stud	TE2601000309
39		4	Stud (for flange AL, std. OD2=300)	TE2601000310
40		4	Cap nut (for flange AL, std. OD2=300)	TE2601000261
41		1	O-ring, FEP (for flange OD2=285)	TE2601000550
		1	O-ring, FEP (for flange OD2=300)	TE2601000075
		1	O-ring, FEP (for flange OD2=340)	TE2601000075
		1	O-ring, FEP (for flange OD2=342,9)	TE2601000076
58		1	Mounting flange, EN1092, std. (OD2=285), Sanitary / Industrial	TE26C3086690
		1	Mounting flange, AL, std. (OD2=300), Sanitary / Industrial	TE26C3087490
		1	Mounting flange, EN1092, std. (OD2=340), Sanitary / Industrial	TE26C306734B
		1	Mounting flange, ANSI, std. (OD2=342,9), Sanitary / Industrial	TE26C3076080
		1	Mounting flange, EN1092, std. (OD2=285), UltraPure	TE26B5086690
		1	Mounting flange, AL, std. (OD2=300), UltraPure	TE26B5087490
		1	Mounting flange, EN1092, std. (OD2=340), UltraPure	TE26B506734B
		1	Mounting flange, ANSI, std. (OD2=342,9), UltraPure	TE26B5076080
		1	Mounting flange, EN1092, std. (OD2=285), UltraPure w. E-polish	TE26A5086690
		1	Mounting flange, AL, std. (OD2=300), UltraPure w. E-polish	TE26A5087490
		1	Mounting flange, EN1092, std. (OD2=340), UltraPure w. E-polish	TE26A506734B
		1	Mounting flange, ANSI, std. (OD2=342,9), UltraPure w. E-polish	TE26A5076080
85	♦	1	S seal, C/SiC, FPM, ATEX II 2GD c TX *)	TE2602000315
	□	1	S seal, C/SiC, EPDM, ATEX II 2GD c TX *)	TE2602000311
	▲	1	S seal, C/SiC, FFKM, ATEX II 2GD c TX *)	9615453201
86		1	Ring, retainer	TE260405346B
87		4	Screw	TE2601000326
		4	Screw **)	9615452401
90		1	Oil trap	TE2604039770
91	□♦	1	O-ring	TE2601000294
108		1	O-ring, FEP (for shaft size OD1=25)	TE2601000243
		1	O-ring, FEP (for shaft size OD1=30)	TE2601000244
		1	O-ring, FEP (for shaft size OD1=35)	TE2601000245
		1	O-ring, FEP (for shaft size OD1=40)	TE2601000246
		1	O-ring, FEP (for shaft size OD1=45)	TE2601000247
		1	O-ring, FEP (for shaft size OD1=50)	TE2601000248
109		4/Imp	Screw, pointed, M10	TE2601000443
		4/Imp	Screw, pointed, M12	TE2601000596
125		1	Name plate	9615273101
126		4	Rivet	TE2601000391
130		1	Parallel key (for shaft OD4=40), length = 140mm	9615377301
		1	Parallel key (for shaft OD4=40), length = 160mm	TE2601000678
146		1	Fixing element	9615269505
147		1	Screw	TE2601000665
157		1	Spring, ring	9615432401
158		2	Guard	9615383201
159		8	Screw	TE2601000031
160		8	Cap nut	TE2601000261
163		1	Drive ring, stationary **)	9615451703
164		1	O-ring, FEP **)	9615451901

RI = Request Item. Article number available upon request by serial number or article number of the agitator.

*) The listed article numbers are for the complete seal. The seal-kit contains only the ceramic parts and elastomers.

**) Only to be used when seal elastomer for pos. 85 is FFKM.

Agitator ALT ATEX, marking II 2G... or II 2D..., size Ø50

Thread size	Lk
M10	50
M12	60
M16	80
M20	100

Ø shaft	L2 max	(M-HSL) max	CL
Ø30	159,5	29,5	8,275
Ø40	179,5	47,5	7,25
Ø50	200,5	47,5	7,3
Ø60	198	45	5,8
Ø70	202,5	45	8,325
Ø80	209,5	52	8,325
Ø90	209,5	52	5,825

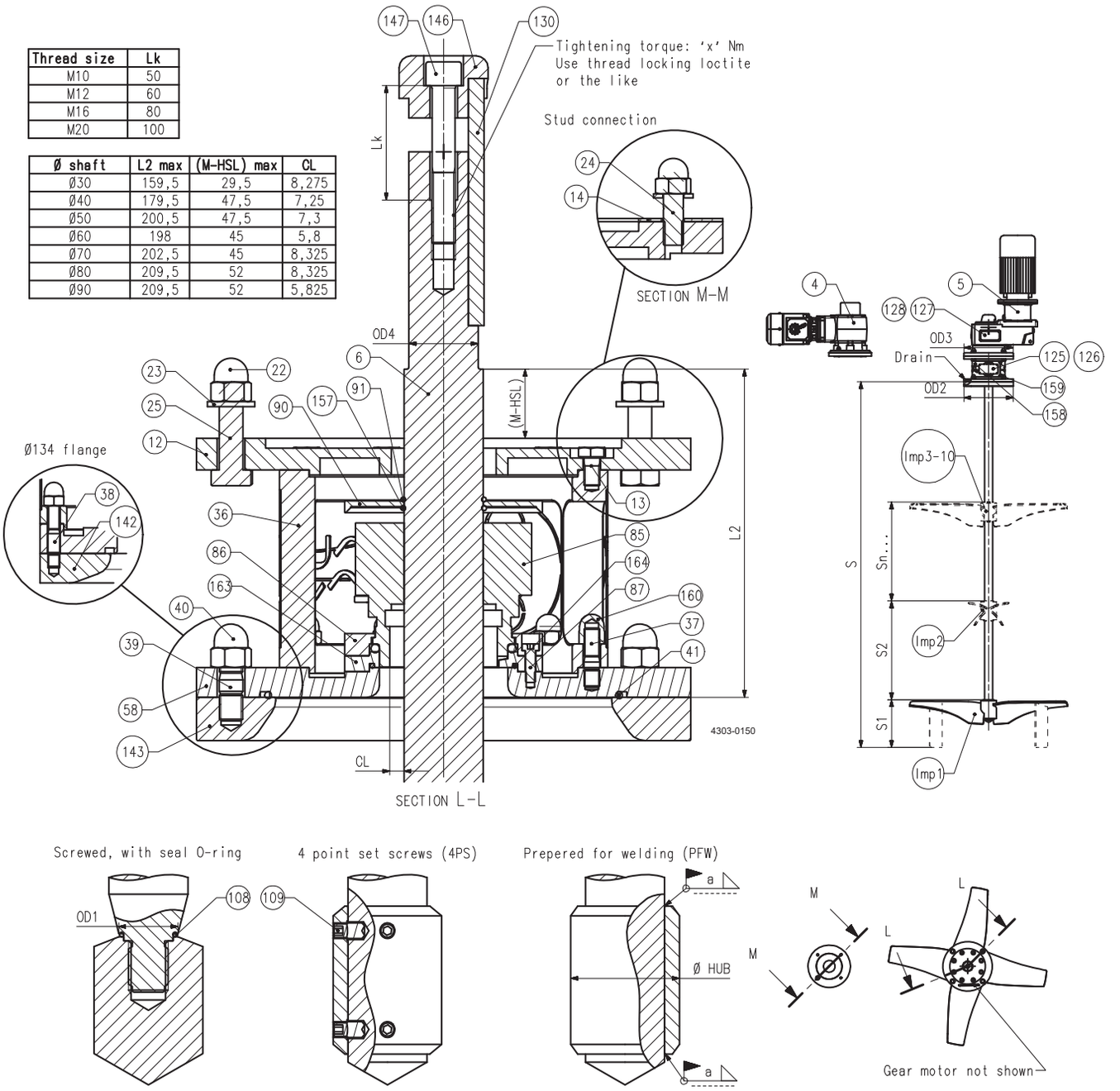

Pos	Qty	Denomination	size: Ø50

Agitator ALT ATEX, marking II 2G... or II 2D..., size Ø50

Imp1	1	Impeller device, EnSaFoil (E125-E1900, D2(L), D3(L)) or Low Level (L600-L1700) or EnSaFerm (F450-F1900)	RI
Imp2-Imp10	1	Impeller device, EnSaFoil (E250-E1900, D2, D3) or EnSaFerm (F450-F1900)	RI

RI = Request Item. Article number available upon request by serial number or article number of the agitator.

		size: Ø50

Seal kits

□	Seal kit, S, C/SiC, EPDM	TE2613000045
♦	Seal kit, S, C/SiC, FPM	TE2613000035
▲	Seal kit, S, C/SiC, FFKM	9615453801

Agitator ALT ATEX, marking II 2G... or II 2D..., size Ø60

Thread size	Lk
M10	50
M12	60
M16	80
M20	100

Ø shaft	L2 max	(M-HSL) max	CL
Ø30	159,5	29,5	8,275
Ø40	179,5	47,5	7,25
Ø50	200,5	47,5	7,3
Ø60	198	45	5,8
Ø70	202,5	45	8,325
Ø80	209,5	52	8,325
Ø90	209,5	52	5,825

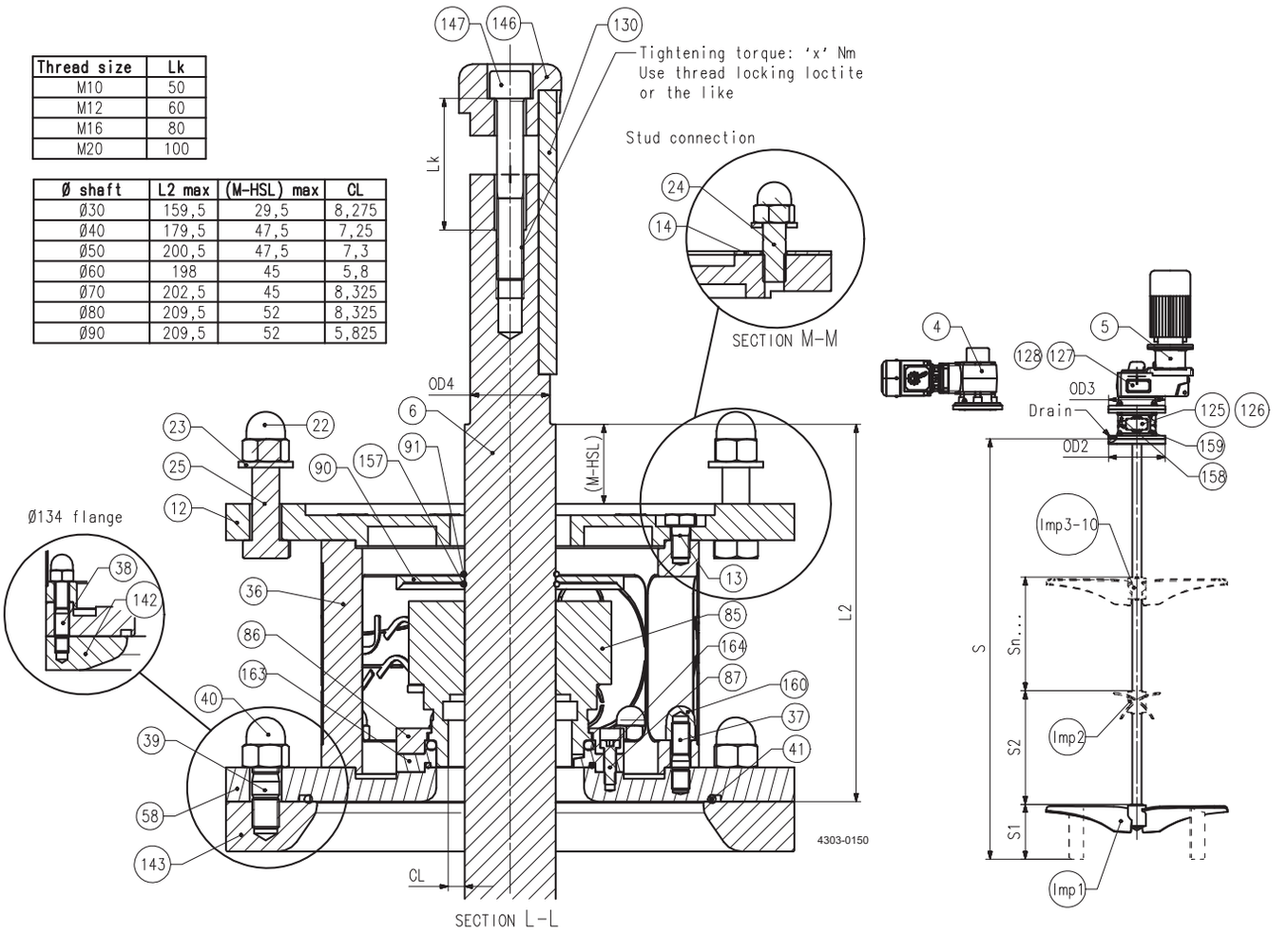

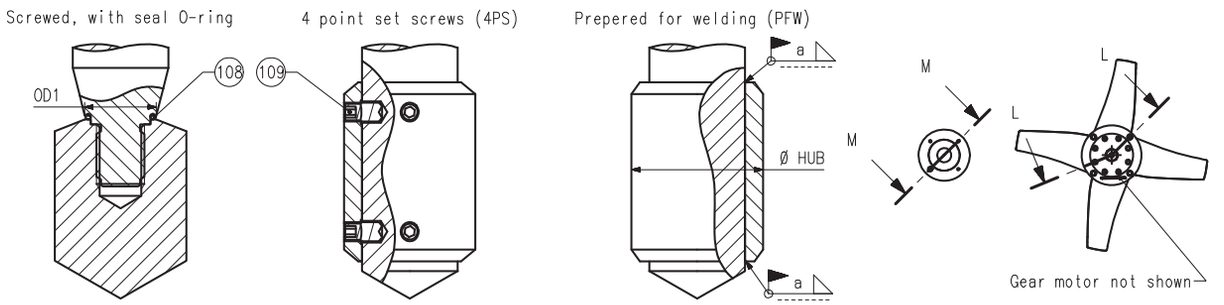

Pos	Qty	Denomination	size: Ø60
Agitator ALT ATEX, marking II 2G... or II 2D..., size Ø60			
4	1	GR gear motor, hollow shaft	RI
5	1	GP gear motor, hollow shaft	RI
6	1	Shaft	RI
12	1	Drive unit flange, (OD3=250), Sanitary / Industrial	TE26C3073230
	1	Drive unit flange, (OD3=300), Sanitary / Industrial	TE26C306549A
	1	Drive unit flange, (OD3=250), UltraPure	TE26B3073230
	1	Drive unit flange, (OD3=300), UltraPure	TE26B306549A
13	8	Screw (for flange OD3=250)	TE2601000562
	12	Screw	TE2601000562
22	4	Cap nut (for flange OD3 = 250)	TE2601000261
	4	Cap nut (for flange OD3 = 300)	TE2601000261
23	4	Washer (for flange OD3 = 250)	TE2601000347
	4	Washer (for flange OD3 = 300)	TE2601000347
24	4	Stud (for flange OD3 = 250), length 30mm	TE2601000310
	4	Stud (for flange OD3 = 250), length 35mm	TE2601000393
25	4	Screw (for flange OD3 = 300)	TE2601000579
36	2	Lantern, Sanitary / Industrial	TE26C4010970
	2	Lantern, UltraPure	TE26B5010970
37	12	Stud	TE2601000309
39	4	Stud (for flange AL, std. OD2=300)	TE2601000310
	4	Stud (for flange AL, std. OD2=350)	TE2601000137
40	4	Cap nut (for flange AL, std. OD2=300)	TE2601000261
	4	Cap nut (for flange AL, std. OD2=350)	TE2601000058
41	1	O-ring, FEP (for flange OD2=300)	TE2601000075
	1	O-ring, FEP (for flange OD2=340)	TE2601000075
	1	O-ring, FEP (for flange OD2=350)	TE2601000076
58	1	Mounting flange, AL, std. (OD2=300), Sanitary / Industrial	TE26C3087500
	1	Mounting flange, EN1092, std. (OD2=340), Sanitary / Industrial	TE26C3087540
	1	Mounting flange, AL, std. (OD2=350), Sanitary / Industrial	TE26C3089040
	1	Mounting flange, AL, std. (OD2=300), UltraPure	TE26B5087500
	1	Mounting flange, EN1092, std. (OD2=340), UltraPure	TE26B5087540
	1	Mounting flange, AL, std. (OD2=350), UltraPure	TE26B5089040
	1	Mounting flange, AL, std. (OD2=300), UltraPure w. E-polish	TE26A5087500
	1	Mounting flange, EN1092, std. (OD2=340), UltraPure w. E-polish	TE26A5087540
	1	Mounting flange, AL, std. (OD2=350), UltraPure w. E-polish	TE26A5089040
85 ♦	1	S seal, C/SiC, FPM, ATEX II 2GD c TX *)	TE2602000317
□	1	S seal, C/SiC, EPDM, ATEX II 2GD c TX *)	TE2602000316
▲	1	S seal, C/SiC, FFKM, ATEX II 2GD c TX *)	9615453301
86	1	Ring, retainer	TE260405344A
87	4	Screw	TE2601000326
	4	Screw **)	9615452401
90	1	Oil trap	TE2604053450
91 □♦	1	O-ring	TE2601000297
108	1	O-ring, FEP (for shaft size OD1=25)	TE2601000243
	1	O-ring, FEP (for shaft size OD1=30)	TE2601000244
	1	O-ring, FEP (for shaft size OD1=35)	TE2601000245
	1	O-ring, FEP (for shaft size OD1=40)	TE2601000246
	1	O-ring, FEP (for shaft size OD1=45)	TE2601000247
	1	O-ring, FEP (for shaft size OD1=50)	TE2601000248
	1	O-ring, FEP (for shaft size OD1=55)	TE2601000249
	1	O-ring, FEP (for shaft size OD1=60)	TE2601000250
109	4/Imp	Screw, pointed, M10	TE2601000443
	4/Imp	Screw, pointed, M12	TE2601000587
125	1	Name plate	9615273101
126	4	Rivet	TE2601000391
130	1	Parallel key (for shaft OD4=50)	TE2601000664
	1	Parallel key (for shaft OD4=55)	TE2601000557
146	1	Fixing element (for shaft OD4=50)	9615269502
	1	Fixing element (for shaft OD4=55)	9615269509
147	1	Screw (for shaft OD4=50)	TE2601000665
	1	Screw (for shaft OD4=55)	TE2601000663
157	1	Spring, ring	9615432501
158	2	Guard	9615383901
159	8	Screw	TE2601000031
160	12	Cap nut	TE2601000261
163	1	Drive ring, stationary **)	9615451704
164	1	O-ring, FEP **)	9615452001

RI = Request Item. Article number available upon request by serial number or article number of the agitator.

*) The listed article numbers are for the complete seal. The seal-kit contains only the ceramic parts and elastomers.

**) Only to be used when seal elastomer for pos. 85 is FFKM.

Agitator ALT ATEX, marking II 2G... or II 2D..., size Ø60

Thread size	Lk
M10	50
M12	60
M16	80
M20	100

Ø shaft	L2 max	(M-HSL) max	CL
Ø30	159,5	29,5	8,275
Ø40	179,5	47,5	7,25
Ø50	200,5	47,5	7,3
Ø60	198	45	5,8
Ø70	202,5	45	8,325
Ø80	209,5	52	8,325
Ø90	209,5	52	5,825

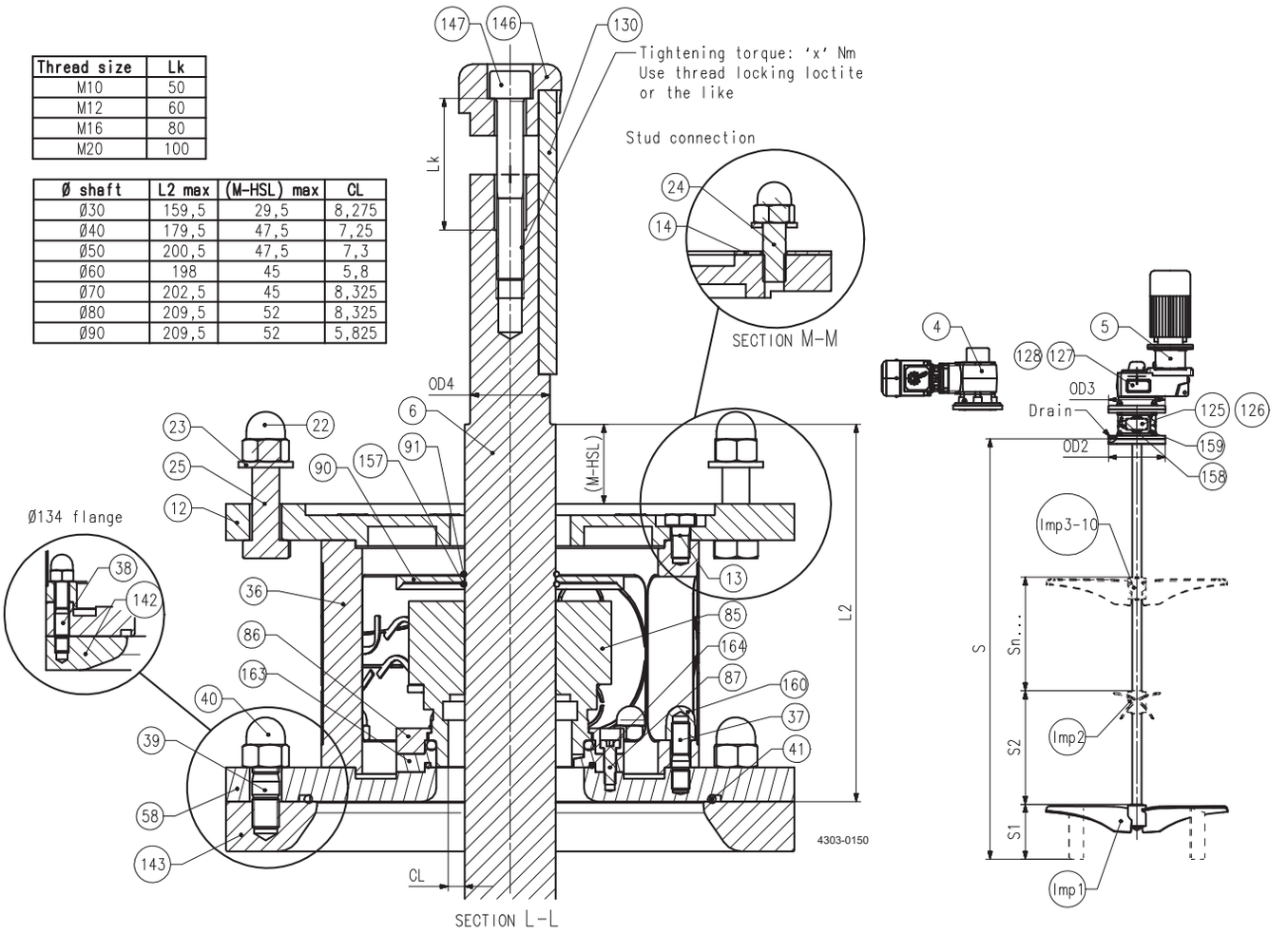

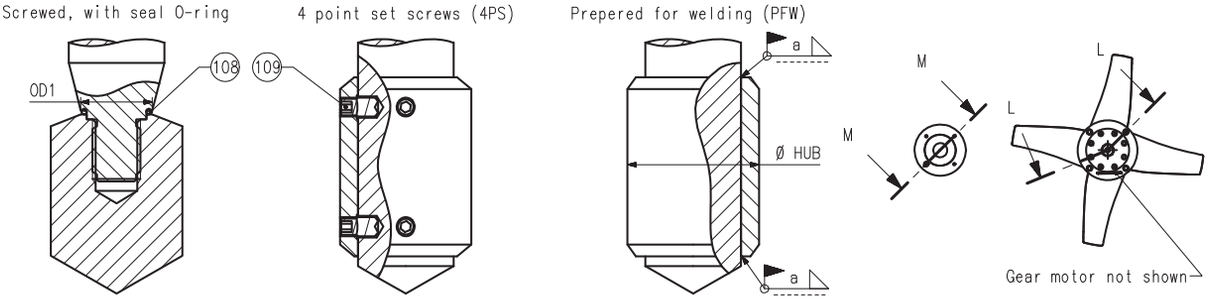

Pos	Qty	Denomination	size: Ø60

Agitator ALT ATEX, marking II 2G... or II 2D..., size Ø60

Imp1	1	Impeller device, EnSaFoil (E125-E1900, D2(L), D3(L)) or Low Level (L600-L1700) or EnSaFerm (F450-F1900)	RI
Imp2-Imp10	1	Impeller device, EnSaFoil (E250-E1900, D2, D3) or EnSaFerm (F450-F1900)	RI

RI = Request Item. Article number available upon request by serial number or article number of the agitator.

		size: Ø60

Seal kits

□	**Seal kit, S, C/SiC, EPDM**	**TE2613000046**
♦	**Seal kit, S, C/SiC, FPM**	**TE2613000036**
▲	**Seal kit, S, C/SiC, FFKM**	**9615453901**

Agitator ALT ATEX, marking II 2G... or II 2D..., size Ø70

Thread size	Lk
M10	50
M12	60
M16	80
M20	100

Ø shaft	L2 max	(M-HSL) max	CL
Ø30	159,5	29,5	8,275
Ø40	179,5	47,5	7,25
Ø50	200,5	47,5	7,3
Ø60	198	45	5,8
Ø70	202,5	45	8,325
Ø80	209,5	52	8,325
Ø90	209,5	52	5,825

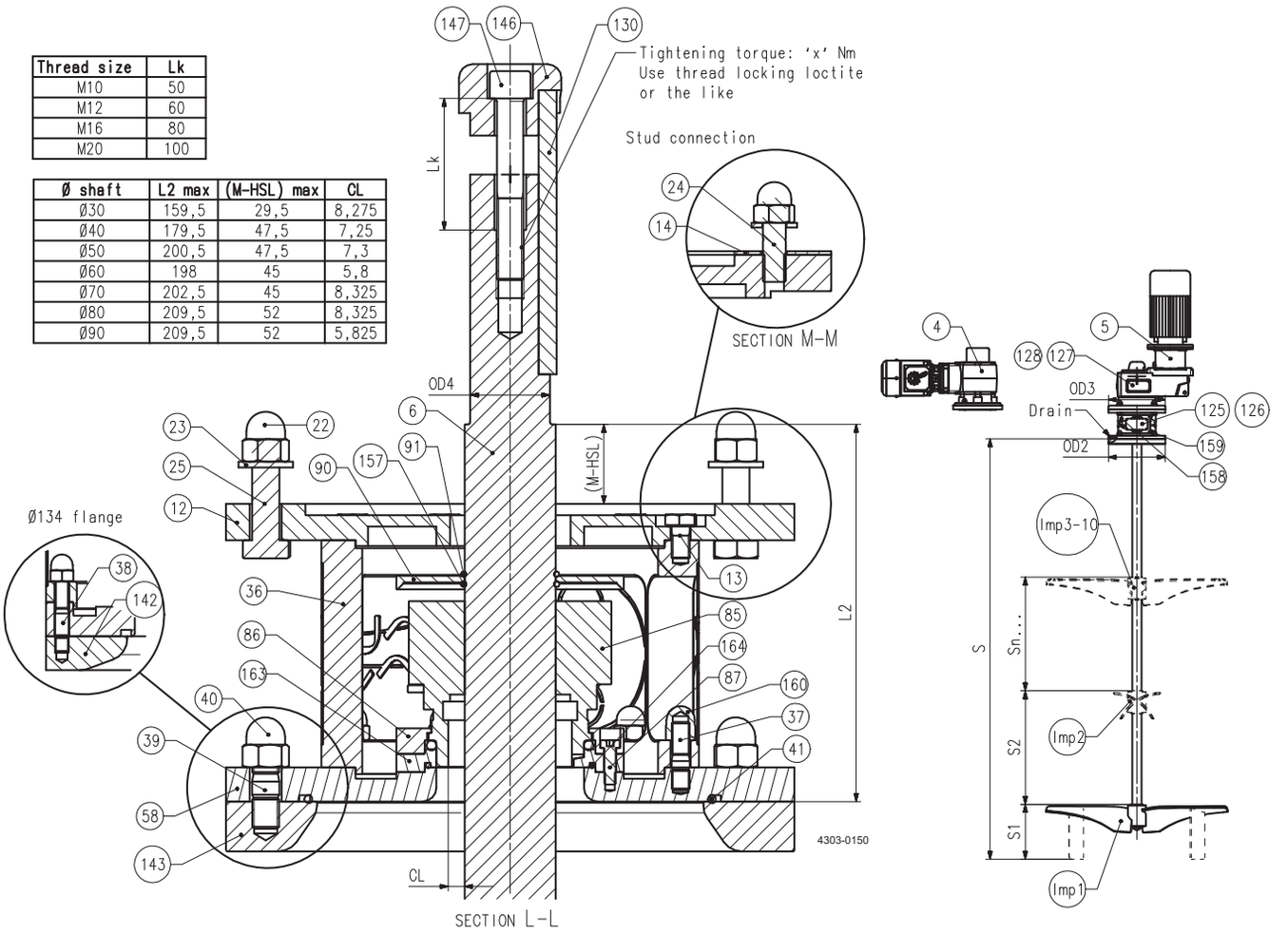

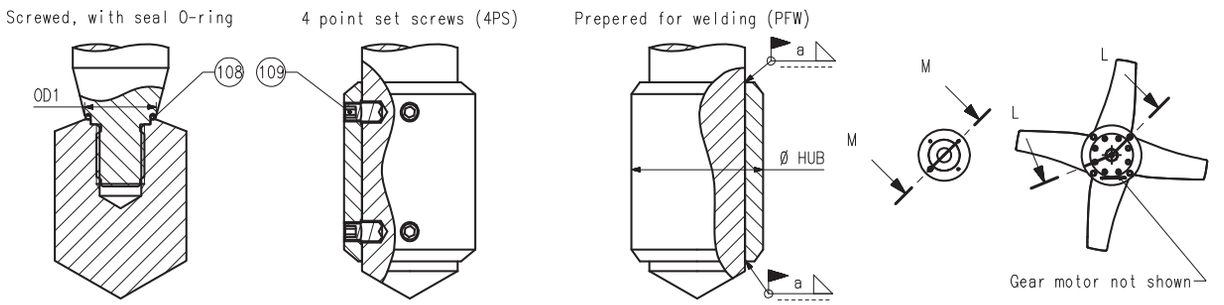

Pos	Qty	Denomination	size: ø70
Agitator ALT ATEX, marking II 2G... or II 2D..., size Ø70			
4	1	GR gear motor, hollow shaft	RI
5	1	GP gear motor, hollow shaft	RI
6	1	Shaft	RI
12	1	Drive unit flange, (OD3=350), Sanitary / Industrial	TE26C3067000
	1	Drive unit flange, (OD3=350), UltraPure	TE26B3067000
13	12	Screw	TE2601000563
22	4	Cap nut (for flange OD3 = 350)	TE2601000058
23	4	Washer (for flange OD3 = 350)	TE2601000348
25	4	Screw (for flange OD3 = 350)	TE2601000052
36	2	Lantern, Sanitary / Industrial	TE26C4010980
	2	Lantern, UltraPure	TE26B5010980
37	12	Stud	TE2601000137
39	4	Stud (for flange AL, std. OD2=350)	TE2601000137
40	4	Cap nut (for flange AL, std. OD2=350)	TE2601000058
41	1	O-ring, FEP (for flange OD2=350)	TE2601000076
	1	O-ring, FEP (for flange OD2=395)	TE2601000163
	1	O-ring, FEP (for flange OD2=406,4)	TE2601000163
58	1	Mounting flange, AL, std. (OD2=350), Sanitary / Industrial	TE26C3087510
	1	Mounting flange, EN1092, std. (OD2=395), Sanitary / Industrial	TE26C3087550
	1	Mounting flange, ANSI, std. (OD2=406,4), Sanitary / Industrial	TE26C3076620
	1	Mounting flange, AL, std. (OD2=350), UltraPure	TE26B5087510
	1	Mounting flange, EN1092, std. (OD2=395), UltraPure	TE26B5087550
	1	Mounting flange, ANSI, std. (OD2=406,4), UltraPure	TE26B5076620
	1	Mounting flange, AL, std. (OD2=350), UltraPure w. E-polish	TE26A5087510
	1	Mounting flange, EN1092, std. (OD2=395), UltraPure w. E-polish	TE26A5087550
	1	Mounting flange, ANSI, std. (OD2=406,4), UltraPure w. E-polish	TE26A5076620
85 ♦	1	S seal, C/SiC, FPM, ATEX II 2GD c TX *)	TE2602000319
□	1	S seal, C/SiC, EPDM, ATEX II 2GD c TX *)	TE2602000318
▲	1	S seal, C/SiC, FFKM, ATEX II 2GD c TX *)	9615453401
86	1	Ring, retainer	TE2604076630
87	4	Screw	TE2601000326
	4	Screw **)	9615452401
90	1	Oil trap	TE2604076710
91 □♦	1	O-ring	TE2601000039
108	1	O-ring, FEP (for shaft size OD1=25)	TE2601000243
	1	O-ring, FEP (for shaft size OD1=30)	TE2601000244
	1	O-ring, FEP (for shaft size OD1=35)	TE2601000245
	1	O-ring, FEP (for shaft size OD1=40)	TE2601000246
	1	O-ring, FEP (for shaft size OD1=45)	TE2601000247
	1	O-ring, FEP (for shaft size OD1=50)	TE2601000248
	1	O-ring, FEP (for shaft size OD1=55)	TE2601000249
	1	O-ring, FEP (for shaft size OD1=60)	TE2601000250
	1	O-ring, FEP (for shaft size OD1=65)	TE2601000189
	1	O-ring, FEP (for shaft size OD1=70)	TE2601000609
109	4/Imp	Screw, pointed, M12	TE2601000587
127	1	Name plate	9615273101
128	4	Rivet	TE2601000202
130	1	Parallel key	TE2601000662
146	1	Fixing element	9615269501
147	1	Screw	TE2601000663
157	1	Spring, ring	9615432601
158	2	Guard	9615384001
159	8	Screw	TE2601000031
160	12	Cap nut	TE2601000058
163	1	Drive ring, stationary **)	9615451705
164**	1	O-ring, FEP **)	9615452101
Imp1	1	Impeller device, EnSaFoil (E125-E1900, D2(L), D3(L)) or Low Level (L600-L1700) or EnSaFerm (F450-F1900)	RI
Imp2-Imp10	1	Impeller device, EnSaFoil (E250-E1900, D2, D3) or EnSaFerm (F450-F1900)	RI

RI = Request Item. Article number available upon request by serial number or article number of the agitator.

*) The listed article numbers are for the complete seal. The seal-kit contains only the ceramic parts and elastomers.

**) Only to be used when seal elastomer for pos. 85 is FFKM.

	size: Ø70
Seal kits	
□ **Seal kit, S, C/SiC, EPDM**	**TE2613000047**
♦ **Seal kit, S, C/SiC, FPM**	**TE2613000037**
▲ **Seal kit, S, C/SiC, FFKM**	**9615454001**

Agitator ALT ATEX, marking II 2G... or II 2D..., size Ø80

Thread size	Lk
M10	50
M12	60
M16	80
M20	100

Ø shaft	L2 max	(M-HSL) max	CL
Ø30	159,5	29,5	8,275
Ø40	179,5	47,5	7,25
Ø50	200,5	47,5	7,3
Ø60	198	45	5,8
Ø70	202,5	45	8,325
Ø80	209,5	52	8,325
Ø90	209,5	52	5,825

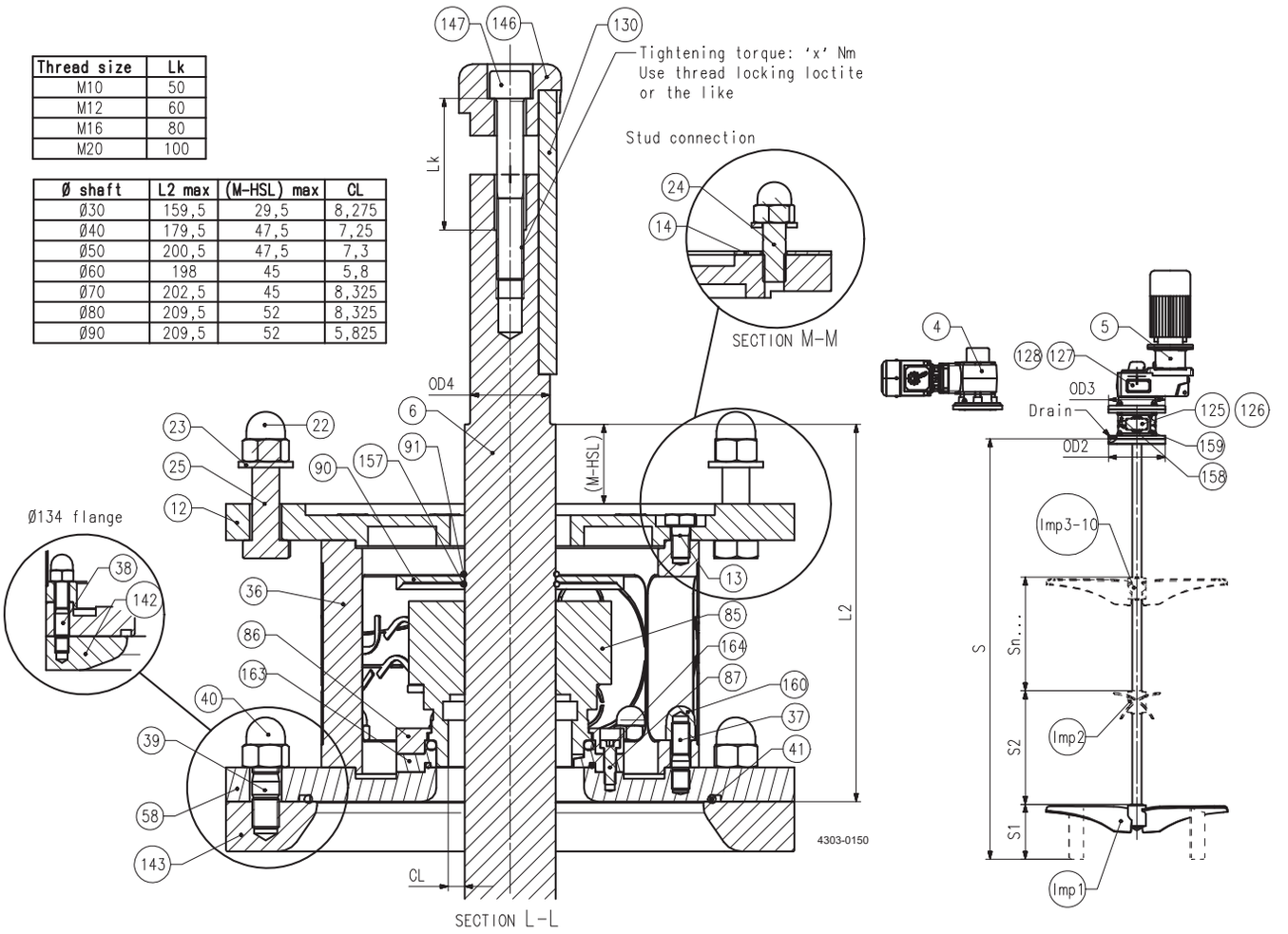

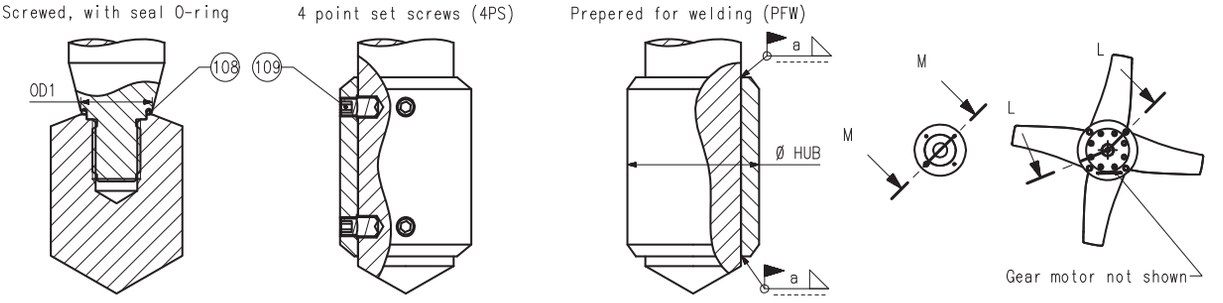

Pos	Qty	Denomination	size: Ø80
Agitator ALT ATEX, marking II 2G... or II 2D..., size Ø80			
4	1	GR gear motor, hollow shaft	RI
5	1	GP gear motor, hollow shaft	RI
6	1	Shaft	RI
12	1	Drive unit flange, (OD3=400), Sanitary / Industrial	TE26C3067010
	1	Drive unit flange, (OD3=450), Sanitary / Industrial	TE26C3067020
	1	Drive unit flange, (OD3=400), UltraPure	TE26B3067010
	1	Drive unit flange, (OD3=450), UltraPure	TE26B3067020
13	12	Screw	TE2601000563
22	4	Cap nut (for flange OD3 = 400)	TE2601000058
	8	Cap nut (for flange OD3 = 450)	TE2601000058
23	4	Washer (for flange OD3 = 400)	TE2601000348
	8	Washer (for flange OD3 = 450)	TE2601000348
25	4	Screw (for flange OD3 = 400)	TE2601000052
	8	Screw (for flange OD3 = 450), length 65mm	TE2601000052
	8	Screw (for flange OD3 = 450), length 70mm	TE2601000601
36	2	Lantern, Sanitary / Industrial	TE26C4010980
	2	Lantern, UltraPure	TE26B5010980
37	12	Stud	TE2601000137
39	4	Stud (for flange AL, std. OD2=350)	TE2601000137
40	4	Cap nut (for flange AL, std. OD2=350)	TE2601000058
41	1	O-ring, FEP (for flange OD2=350)	TE2601000076
	1	O-ring, FEP (for flange OD2=395)	TE2601000163
58	1	Mounting flange, AL, std. (OD2=350), Sanitary / Industrial	TE26C3087520
	1	Mounting flange, EN1092, std. (OD2=395), Sanitary / Industrial	TE26C3087560
	1	Mounting flange, AL, std. (OD2=350), UltraPure	TE26B5087520
	1	Mounting flange, EN1092, std. (OD2=395), UltraPure	TE26B5087560
	1	Mounting flange, AL, std. (OD2=350), UltraPure w. E-polish	TE26A5087520
	1	Mounting flange, EN1092, std. (OD2=395), UltraPure w. E-polish	TE26A5087560
85 ♦	1	S seal, C/SiC, FPM, ATEX II 2GD c TX *)	TE2602000321
□	1	S seal, C/SiC, EPDM, ATEX II 2GD c TX *)	TE2602000320
▲	1	S seal, C/SiC, FFKM, ATEX II 2GD c TX *)	9615453501
86	1	Ring, retainer	TE260405343A
87	4	Screw	TE2601000326
	4	Screw **)	9615452401
90	1	Oil trap	TE2604034400
91 □♦	1	O-ring	TE2601000151
108	1	O-ring, FEP (for shaft size OD1=25)	TE2601000243
	1	O-ring, FEP (for shaft size OD1=30)	TE2601000244
	1	O-ring, FEP (for shaft size OD1=35)	TE2601000245
	1	O-ring, FEP (for shaft size OD1=40)	TE2601000246
	1	O-ring, FEP (for shaft size OD1=45)	TE2601000247
	1	O-ring, FEP (for shaft size OD1=50)	TE2601000248
	1	O-ring, FEP (for shaft size OD1=55)	TE2601000249
	1	O-ring, FEP (for shaft size OD1=60)	TE2601000250
	1	O-ring, FEP (for shaft size OD1=65)	TE2601000189
	1	O-ring, FEP (for shaft size OD1=70)	TE2601000609
	1	O-ring, FEP (for shaft size OD1=75)	TE2601000610
	1	O-ring, FEP (for shaft size OD1=80)	TE2601000611
109	4/Imp	Screw, pointed, M12	TE2601000206
127	1	Name plate	9615273101
128	4	Rivet	TE2601000202
130	1	Parallel key	9615378701
146	1	Fixing element	9615269507
147	1	Screw	TE2601000663
157	1	Spring, ring	9615432701
158	2	Guard	9615384001
159	8	Screw	TE2601000031
160	12	Cap nut	TE2601000058
163	1	Drive ring, stationary **)	9615451706
164	1	O-ring, FEP **)	9615452201

RI = Request Item. Article number available upon request by serial number or article number of the agitator.

*) The listed article numbers are for the complete seal. The seal-kit contains only the ceramic parts and elastomers.

**) Only to be used when seal elastomer for pos. 85 is FFKM.

Agitator ALT ATEX, marking II 2G... or II 2D..., size Ø80

Thread size	Lk
M10	50
M12	60
M16	80
M20	100

Ø shaft	L2 max	(M-HSL) max	CL
Ø30	159,5	29,5	8,275
Ø40	179,5	47,5	7,25
Ø50	200,5	47,5	7,3
Ø60	198	45	5,8
Ø70	202,5	45	8,325
Ø80	209,5	52	8,325
Ø90	209,5	52	5,825

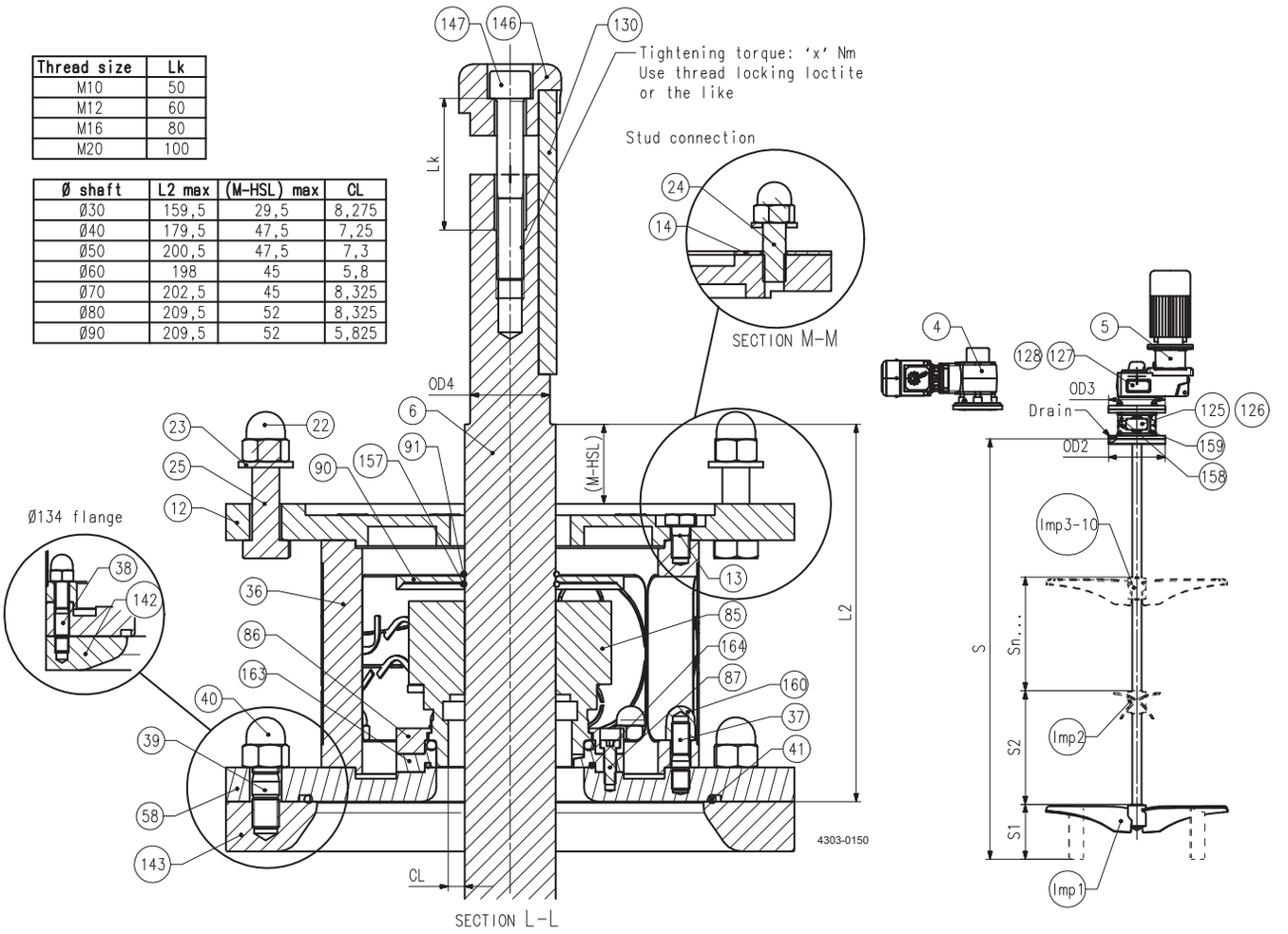

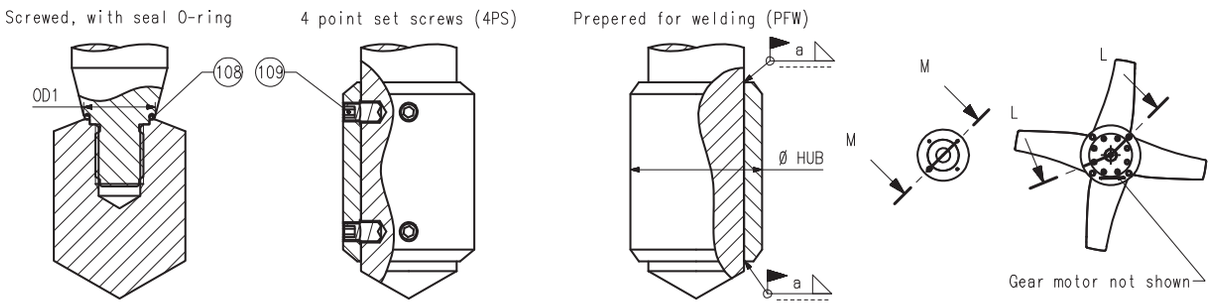

Pos	Qty	Denomination	size: Ø80

Agitator ALT ATEX, marking II 2G... or II 2D..., size Ø80

Imp1	1	Impeller device, EnSaFoil (E125-E1900, D2(L), D3(L)) or Low Level (L600-L1700) or EnSaFerm (F450-F1900)	RI
Imp2-Imp10	1	Impeller device, EnSaFoil (E250-E1900, D2, D3) or EnSaFerm (F450-F1900)	RI

RI = Request Item. Article number available upon request by serial number or article number of the agitator.

		size: Ø80

Seal kits

□	Seal kit, S, C/SiC, EPDM	TE2613000048
♦	Seal kit, S, C/SiC, FPM	TE2613000038
▲	Seal kit, S, C/SiC, FFKM	9615454101

Agitator ALT ATEX, marking II 2G... or II 2D..., size Ø90

Thread size	Lk
M10	50
M12	60
M16	80
M20	100

Ø shaft	L2 max	(M-HSL) max	CL
Ø30	159,5	29,5	8,275
Ø40	179,5	47,5	7,25
Ø50	200,5	47,5	7,3
Ø60	198	45	5,8
Ø70	202,5	45	8,325
Ø80	209,5	52	8,325
Ø90	209,5	52	5,825

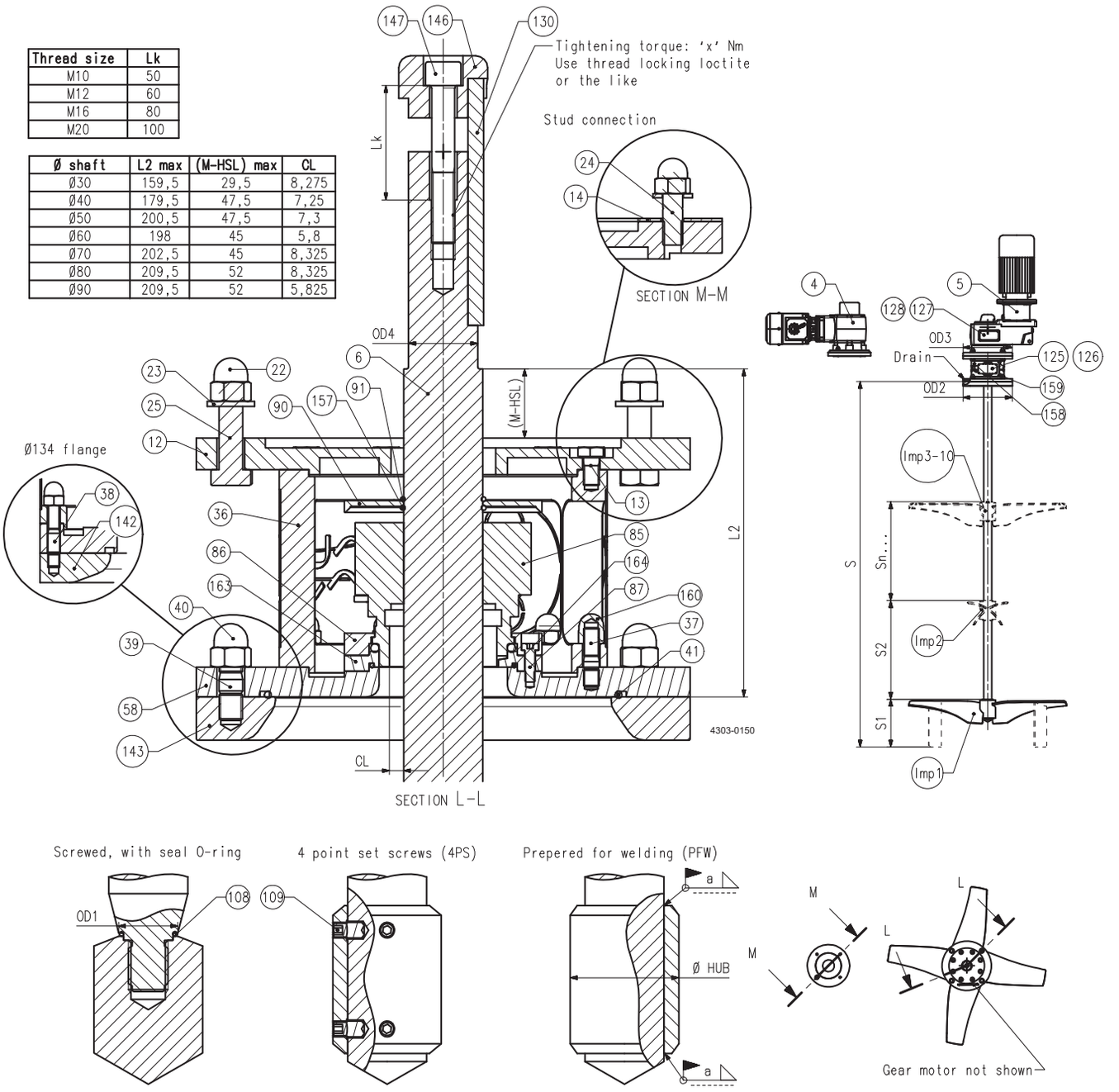

Pos	Qty	Denomination	size: ø90
Agitator ALT ATEX, marking II 2G... or II 2D..., size Ø80			
4	1	GR gear motor, hollow shaft	RI
5	1	GP gear motor, hollow shaft	RI
6	1	Shaft	RI
12	1	Drive unit flange, (OD3=450), Sanitary / Industrial	TE26C3067020
	1	Drive unit flange, (OD3=450), UltraPure	TE26B3067020
13	12	Screw	TE2601000563
22	8	Cap nut (for flange OD3 = 450)	TE2601000058
23	8	Washer (for flange OD3 = 450)	TE2601000348
25	8	Screw (for flange OD3 = 450), length 65mm	TE2601000052
	8	Screw (for flange OD3 = 450), length 70mm	TE2601000601
36	2	Lantern, Sanitary / Industrial	TE26C4010980
	2	Lantern, UltraPure	TE26B5010980
37	12	Stud	TE2601000137
39	4	Stud (for flange AL, std. OD2=350)	TE2601000137
40	4	Cap nut (for flange AL, std. OD2=350)	TE2601000058
41	1	O-ring, FEP (for flange OD2=350)	TE2601000076
	1	O-ring, FEP (for flange OD2=395)	TE2601000163
58	1	Mounting flange, AL, std. (OD2=350), Sanitary / Industrial	TE26C3087530
	1	Mounting flange, EN1092, std. (OD2=395), Sanitary / Industrial	TE26C3087570
	1	Mounting flange, AL, std. (OD2=350), UltraPure	TE26B5087530
	1	Mounting flange, EN1092, std. (OD2=395), UltraPure	TE26B5087570
	1	Mounting flange, AL, std. (OD2=350), UltraPure w. E-polish	TE26A5087530
	1	Mounting flange, EN1092, std. (OD2=395), UltraPure w. E-polish	TE26A5087570
85 ♦	1	S seal, C/SiC, FPM, ATEX II 2GD c TX *)	TE2602000323
□	1	S seal, C/SiC, EPDM, ATEX II 2GD c TX *)	TE2602000322
▲	1	S seal, C/SiC, FFKM, ATEX II 2GD c TX *)	9615453601
86	1	Ring, retainer	TE260405635A
87	4	Screw	TE2601000326
	4	Screw **)	9615452401
90	1	Oil trap	TE2604034390
91 □♦	1	O-ring	TE2601000097
108	1	O-ring, FEP (for shaft size OD1=25)	TE2601000243
	1	O-ring, FEP (for shaft size OD1=30)	TE2601000244
	1	O-ring, FEP (for shaft size OD1=35)	TE2601000245
	1	O-ring, FEP (for shaft size OD1=40)	TE2601000246
	1	O-ring, FEP (for shaft size OD1=45)	TE2601000247
	1	O-ring, FEP (for shaft size OD1=50)	TE2601000248
	1	O-ring, FEP (for shaft size OD1=55)	TE2601000249
	1	O-ring, FEP (for shaft size OD1=60)	TE2601000250
	1	O-ring, FEP (for shaft size OD1=65)	TE2601000189
	1	O-ring, FEP (for shaft size OD1=70)	TE2601000609
	1	O-ring, FEP (for shaft size OD1=75)	TE2601000610
	1	O-ring, FEP (for shaft size OD1=80)	TE2601000611
	1	O-ring, FEP (for shaft size OD1=90)	TE2601000612
109	4/Imp	Screw, pointed, M12	TE2601000206
127	1	Name plate	9615273101
128	4	Rivet	TE2601000202
130	1	Parallel key	9615378901
146	1	Fixing element	9615269508
147	1	Screw	TE2601000663
157	1	Spring, ring	9615432801
158	2	Guard	9615384001
159	8	Screw	TE2601000031
160	12	Cap nut	TE2601000058
163	1	Drive ring, stationary **)	9615451707
164	1	O-ring, FEP **)	9615452301
87	4	Screw **)	9615452401
Imp1	1	Impeller device, EnSaFoil (E125-E1900, D2(L), D3(L)) or Low Level (L600-L1700) or EnSaFerm (F450-F1900)	RI
Imp2-Imp10	1	Impeller device, EnSaFoil (E250-E1900, D2, D3) or EnSaFerm (F450-F1900)	RI

RI = Request Item. Article number available upon request by serial number or article number of the agitator.

*) The listed article numbers are for the complete seal. The seal-kit contains only the ceramic parts and elastomers.

**) Only to be used when seal elastomer for pos. 85 is FFKM.

	size: Ø90
Seal kits	
□ Seal kit, S, C/SiC, EPDM	TE2613000049
♦ Seal kit, S, C/SiC, FPM	TE2613000039
▲ Seal kit, S, C/SiC, FFKM	9615454201

Agitator ALT ATEX, shaft divided, marking II 1/2G... or II 1/2D..., size Ø30

Ø shaft	L2 max	(M-HSL) max	CL
Ø30	274,5	29,5	8,275
Ø40	294,5	47,5	7,25
Ø50	325,5	47,5	7,3

Thread size	Lk
M10	50
M12	60
M16	80
M20	100

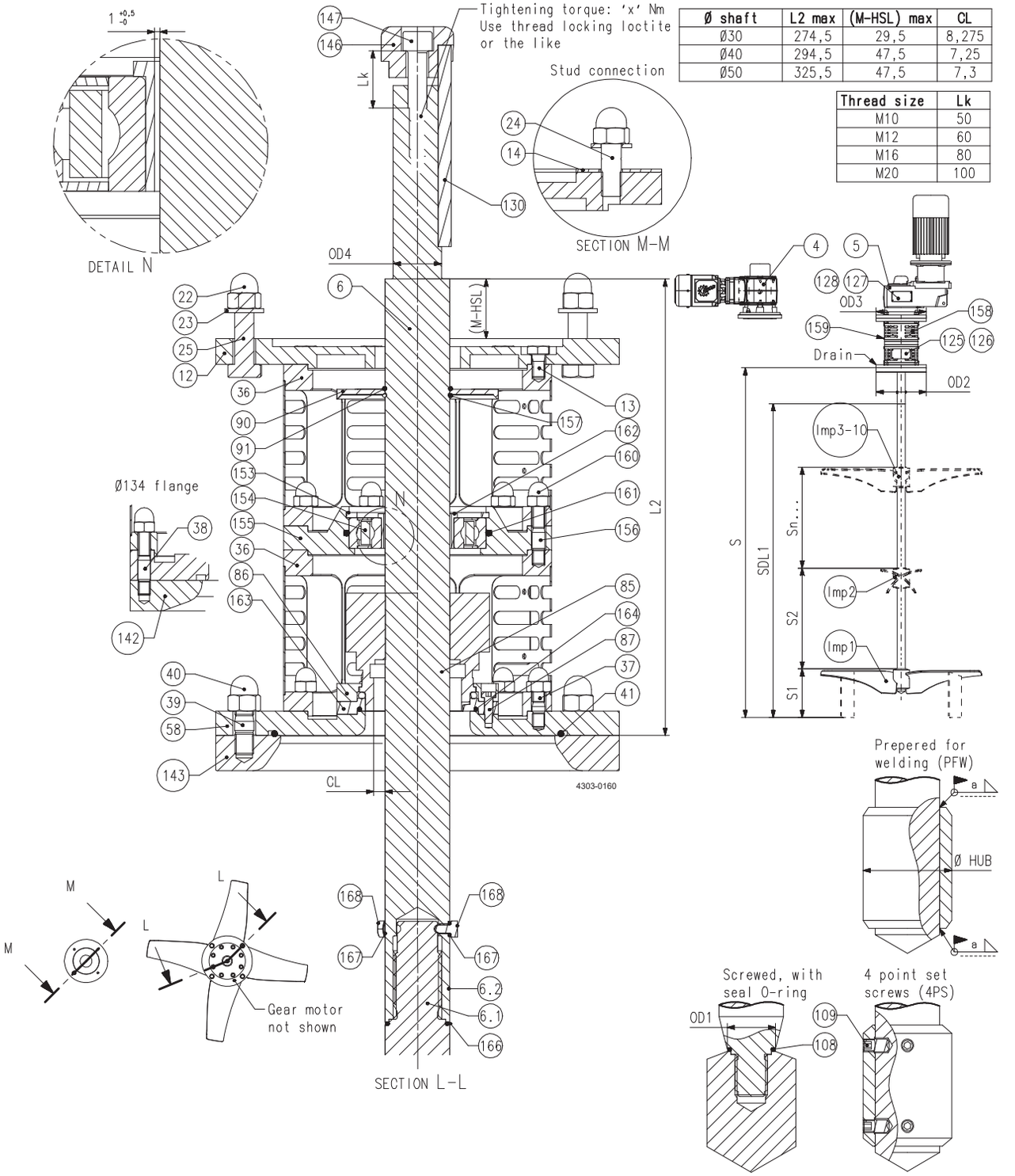

Pos		Qty	Denomination	size: Ø30
Agitator ALT ATEX, shaft divided, marking II 1/2G... or II 1/2D..., size Ø30				
4		1	GR gear motor, hollow shaft	RI
5		1	GP gear motor, hollow shaft	RI
6		1	Shaft divided	RI
12		1	Drive unit flange, (OD3=140), Sanitary / Industrial	TE26C3066960
		1	Drive unit flange, (OD3=160), Sanitary / Industrial	TE26C306016A
		1	Drive unit flange, (OD3=140), UltraPure	TE26B3066960
		1	Drive unit flange, (OD3=160), UltraPure	TE26B306016A
13		8	Screw	TE2601000098
22		4	Cap nut (for flange OD3 = 140)	TE2601000263
		4	Cap nut (for flange OD3 = 160)	TE2601000263
23		4	Washer (for flange OD3 = 140)	TE2601000349
		4	Washer (for flange OD3 = 160), height 2,5mm	TE2601094010
24		4	Stud (for flange OD3 = 140)	TE2601000312
		4	Stud (for flange OD3 = 160)	TE2601000034
36		2	Lantern, Sanitary / Industrial	TE26C401095A
		2	Lantern, UltraPure	TE26B501095A
37		8	Stud	TE2601000311
38		8	Stud	TE2601000112
39		4	Stud (for flange AL, std. OD2=200)	TE2601000307
40		4	Cap nut (for flange AL, std. OD2=200)	TE2601000355
41		1	O-ring, FEP (for flange AL, std. OD2=134)	TE2601000078
		1	O-ring, FEP (for flange AL, std. OD2=200)	TE2601000073
		1	O-ring, FEP (for flange EN1092, std. OD2=200)	TE2601000072
		1	O-ring, FEP (for flange EN1092, std. OD2=220)	TE2601000073
58		1	Mounting flange, AL, std. (OD2=134), Sanitary / Industrial	TE26C3071740
		1	Mounting flange, AL, std. (OD2=200), Sanitary / Industrial	TE26C306655A
		1	Mounting flange, EN1092-std. (OD2=200), Sanitary / Industrial	TE26C3068960
		1	Mounting flange, EN1092, std. (OD2=220), Sanitary / Industrial	TE26C306154B
		1	Mounting flange, AL, std. (OD2=134), UltraPure	TE26B5071740
		1	Mounting flange, AL, std. (OD2=200), UltraPure	TE26B506655A
		1	Mounting flange, EN1092-std. (OD2=200), UltraPure	TE26B5068960
		1	Mounting flange, EN1092, std. (OD2=220), UltraPure	TE26B506154B
		1	Mounting flange, AL, std. (OD2=134), UltraPure w. E-polish	TE26A5071740
		1	Mounting flange, AL, std. (OD2=200), UltraPure w. E-polish	TE26A506655A
		1	Mounting flange, EN1092-std. (OD2=200), UltraPure w. E-polish	TE26A5068960
		1	Mounting flange, EN1092, std. (OD2=220), UltraPure w. E-polish	TE26A506154B
85	♦	1	S seal, C/SiC, FPM, ATEX II 1/2GD c TX *)	TE2602000307
	□	1	S seal, C/SiC, EPDM, ATEX II 1/2GD c TX *)	TE2602000308
	▲	1	S seal, C/SiC, FFKM, ATEX II 1/2GD c TX *)	TE2602000302
86		1	Ring, retainer	TE260406156C
87		4	Screw	TE2601000326
		4	Screw **)	9615452401
90		1	Oil trap	TE2604061570
91	□♦	1	O-ring	TE2601000287
108		1	O-ring, FEP (for shaft size OD1=25)	TE2601000243
		1	O-ring, FEP (for shaft size OD1=30)	TE2601000244
109		4/Imp	Screw, pointed, M6	TE2601000357
		4/Imp	Screw, pointed, M8	TE2601000358
		4/Imp	Screw, pointed, M10	TE2601000015
		4/Imp	Screw, pointed, M12	TE2601000212
125		1	Name plate	9615273101
126		4	Rivet	TE2601000391
130		1	Parallel key	9615362101
146		1	Fixing element	9615269506
147		1	Screw	9615362001
153		1	Circlip, inner	9615430401
154		1	Bearing	9615431101
155		1	Flange, collision protection	9615425701
156		8	Stud	TE2601000112
157		1	Spring, ring	9615432201
158		4	Guard	9615272801
159		16	Screw	TE2601000031
160		16	Cap nut	TE2601000262
161		1	O-ring	TE2601000673
162		1	Sleeve	9615428301
163		1	Drive ring, stationary **)	9615451701
164		1	O-ring, FEP**)	TE2601000189
166		1	O-ring, FEP	TE2601000244
167		2	O-ring, FEP	TE2601000542
168		2	Screw	TE2607221200

RI = Request Item. Article number available upon request by serial number or article number of the agitator.

*) The listed article numbers are for the complete seal. The seal-kit contains only the ceramic parts and elastomers.

**) Only to be used when seal elastomer for pos. 85 is FFKM.

Agitator ALT ATEX, shaft divided, marking II 1/2G... or II 1/2D..., size Ø30

Ø shaft	L2 max	(M-HSL) max	CL
Ø30	274,5	29,5	8,275
Ø40	294,5	47,5	7,25
Ø50	325,5	47,5	7,3

Thread size	Lk
M10	50
M12	60
M16	80
M20	100

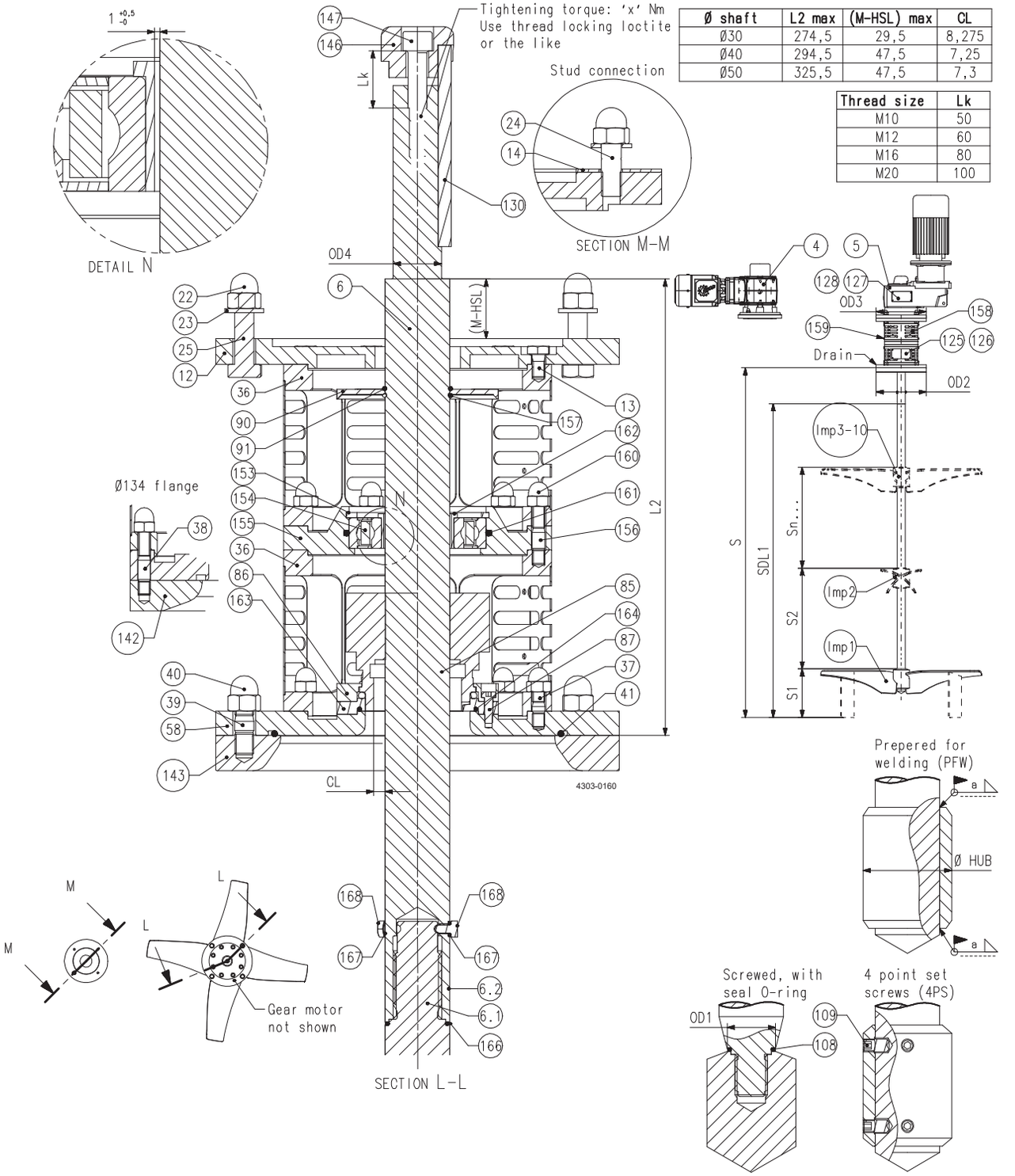

Pos	Qty	Denomination	size: Ø30
Agitator ALT ATEX, shaft divided, marking II 1/2G... or II 1/2D..., size Ø30			
Imp1	1	Impeller device, EnSaFoil (E125-E1900, D2(L), D3(L)) or Low Level (L600-L1700) or EnSaFerm (F450-F1900)	RI
Imp2-Imp10	1	Impeller device, EnSaFoil (E250-E1900, D2, D3) or EnSaFerm (F450-F1900)	RI

RI = Request Item. Article number available upon request by serial number or article number of the agitator.

		size: Ø30
Seal kits		
□	Seal kit, S, C/SiC, EPDM	TE2613000040
♦	Seal kit, S, C/SiC, FPM	TE2613000031
▲	Seal kit, S, C/SiC, FFKM	TE2613000302

Agitator ALT ATEX, shaft divided, marking II 1/2G... or II 1/2D..., size Ø40

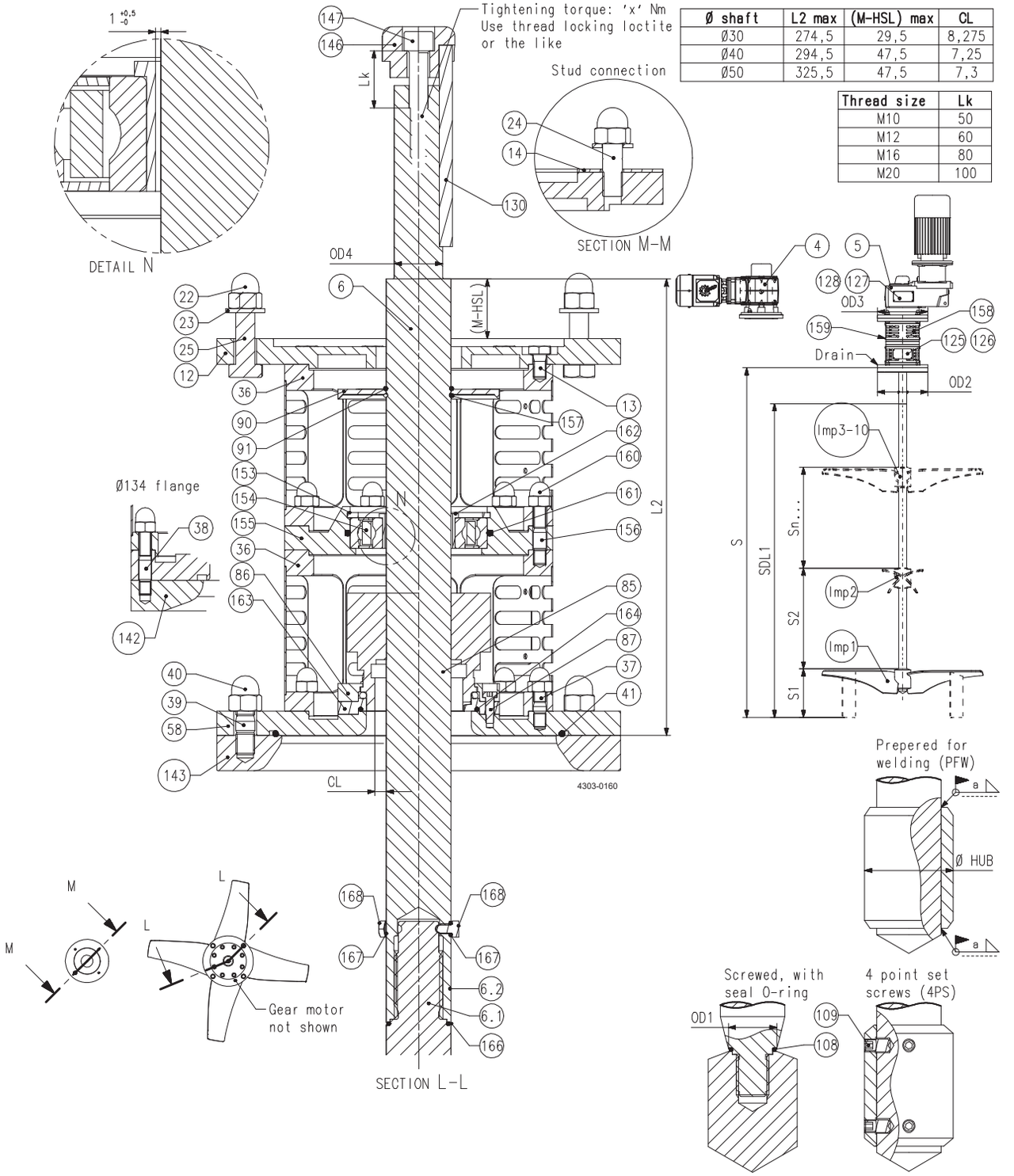

Ø shaft	L2 max	(M-HSL) max	CL
Ø30	274,5	29,5	8,275
Ø40	294,5	47,5	7,25
Ø50	325,5	47,5	7,3

Thread size	Lk
M10	50
M12	60
M16	80
M20	100

Pos	Qty	Denomination	size: Ø40
Agitator ALT ATEX, shaft divided, marking II 1/2G... or II 1/2D..., size Ø40			
4	1	GR gear motor, hollow shaft	RI
5	1	GP gear motor, hollow shaft	RI
6	1	Shaft divided	RI
12	1	Drive unit flange, (OD3=200), Sanitary / Industrial	TE26C304913A
	1	Drive unit flange, (OD3=250), Sanitary / Industrial	TE26C306126A
	1	Drive unit flange, (OD3=200), UltraPure	TE26B304913A
	1	Drive unit flange, (OD3=250), UltraPure	TE26B306126A
13	8	Screw	TE2601000554
22	4	Cap nut (for flange OD3 = 200)	TE2601000355
23	4	Washer (for flange OD3 = 200)	TE2601000346
	4	Washer (for flange OD3 = 250)	TE2601000347
	4	Washer (for flange OD3 = 250), height 4mm	TE2601094060
24	4	Stud (for flange OD3 = 200)	TE2601000307
25	4	Screw (for flange OD3 = 250), length 45mm	TE2601000342
	4	Screw (for flange OD3 = 250), length 50mm	TE2601000531
36	2	Lantern, Sanitary / Industrial	TE26C4010110
	2	Lantern, UltraPure	TE26B5010110
37	8	Stud	TE2601000312
39	4	Stud (for flange AL, std. OD2=250)	TE2601000309
40	4	Cap nut (for flange AL, std. OD2=250)	TE2601000261
41	1	O-ring, FEP (for flange OD2=250)	TE2601000074
	1	O-ring, FEP (for flange OD2=285)	TE2601000074
58	1	Mounting flange, AL, std. (OD2=250), Sanitary / Industrial	TE26C3069460
	1	Mounting flange, EN1092, std. (OD2=250), Sanitary / Industrial	TE26C3068980
	1	Mounting flange, EN1092, std. (OD2=285), Sanitary / Industrial	TE26C3070940
	1	Mounting flange, AL, std. (OD2=250), UltraPure	TE26B5069460
	1	Mounting flange, EN1092, std. (OD2=250), UltraPure	TE26B5068980
	1	Mounting flange, EN1092, std. (OD2=285), UltraPure	TE26B5070940
	1	Mounting flange, AL, std. (OD2=250), UltraPure w. E-polish	TE26A5069460
	1	Mounting flange, EN1092, std. (OD2=250), UltraPure w. E-polish	TE26A5068980
	1	Mounting flange, EN1092, std. (OD2=285), UltraPure w. E-polish	TE26A5070940
85 ♦	1	S seal, C/SiC, FPM, ATEX II 1/2GD c TX *)	TE2602000304
□	1	S seal, C/SiC, EPDM, ATEX II 1/2GD c TX *)	TE2602000310
▲	1	S seal, C/SiC*, FFKM, ATEX II 1/2GD c TX *)	TE2602000314
86	1	Ring, retainer	TE260405177B
87	4	Screw	TE2601000326
	4	Screw **)	9615452401
90	1	Oil trap	TE2604055860
91 □♦	1	O-ring	TE2601000292
108	1	O-ring, FEP (for shaft size OD1=25)	TE2601000243
	1	O-ring, FEP (for shaft size OD1=30)	TE2601000244
	1	O-ring, FEP (for shaft size OD1=35)	TE2601000245
	1	O-ring, FEP (for shaft size OD1=40)	TE2601000246
109	4/Imp	Screw, pointed, M8	TE2601000358
	4/Imp	Screw, pointed, M10	TE2601000015
	4/Imp	Screw, pointed, M12	TE2601000212
125	1	Name plate	9615273101
126	4	Rivet	TE2601000391
130	1	Parallel key (for shaft OD4=30)	9615362101
	1	Parallel key (for shaft OD4=35)	9615316901
146	1	Fixing element (for shaft OD4=30)	9615269503
	1	Fixing element (for shaft OD4=35)	9615269504
147	1	Screw (for shaft OD4=30)	9615362001
	1	Screw (for shaft OD4=35)	9615317001
153	1	Circlip, inner	9615430501
154	1	Bearing	9615431201
155	1	Flange, collision protection	9615426701
156	8	Stud	TE2601000225
157	1	Spring, ring	9615432301
158	4	Guard	9615316701
159	16	Screw	TE2601000031
160	16	Cap nut	TE2601000263
161	1	O-ring	TE2601000501
162	1	Sleeve	9615428302
163	1	Drive ring, stationary **)	9615451702
164	1	O-ring, FEP**)	TE2601000610
166	1	O-ring, FEP	TE2601000246
167	2	O-ring, FEP	TE2601000542
168	2	Screw	TE2607221200

RI = Request Item. Article number available upon request by serial number or article number of the agitator.

*) The listed article numbers are for the complete seal. The seal-kit contains only the ceramic parts and elastomers.

**) Only to be used when seal elastomer for pos. 85 is FFKM.

Agitator ALT ATEX, shaft divided, marking II 1/2G... or II 1/2D..., size Ø40

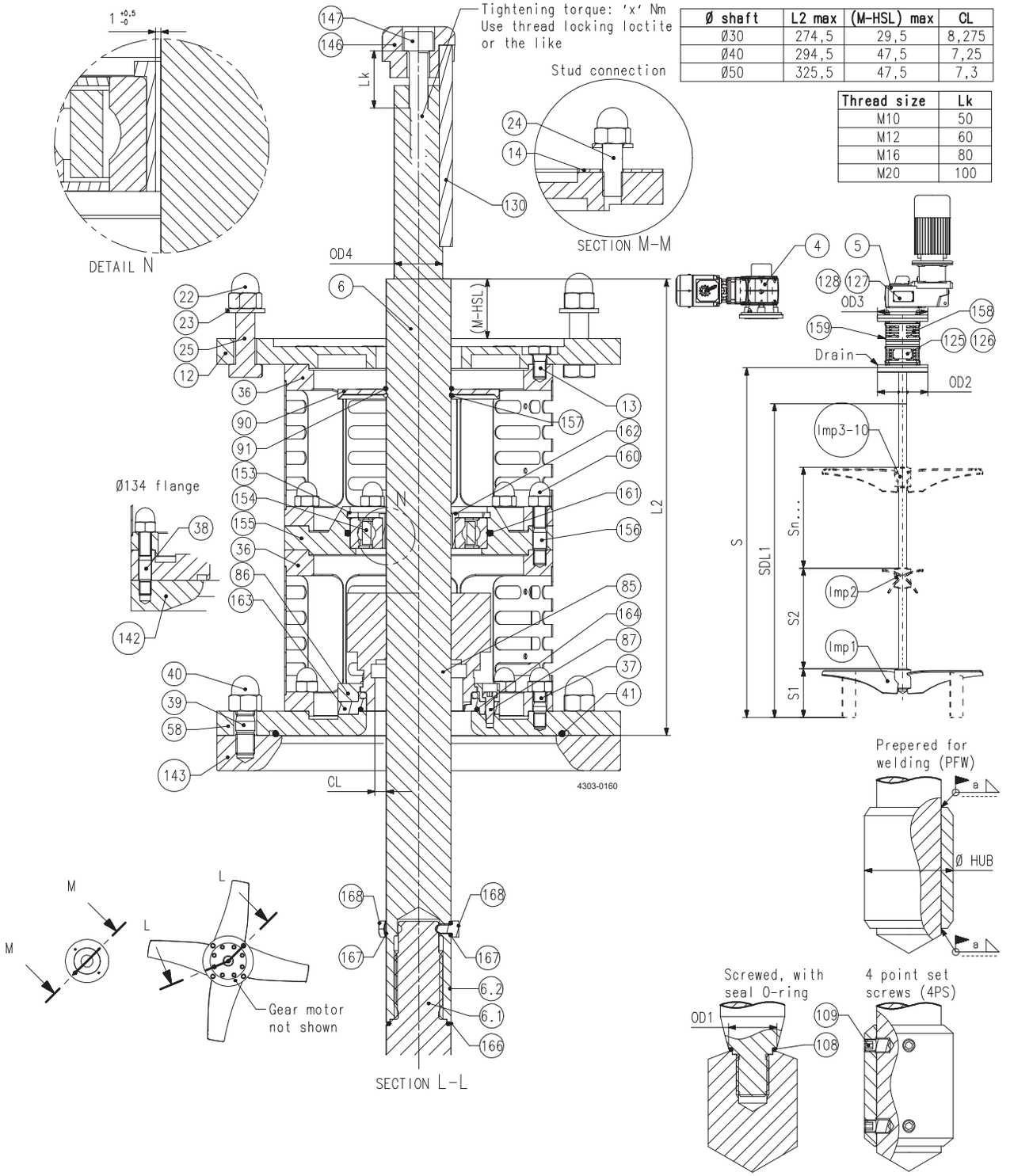

Ø shaft	L2 max	(M-HSL) max	CL
Ø30	274,5	29,5	8,275
Ø40	294,5	47,5	7,25
Ø50	325,5	47,5	7,3

Thread size	Lk
M10	50
M12	60
M16	80
M20	100

Pos	Qty	Denomination	size: Ø40
Agitator ALT ATEX, shaft divided, marking II 1/2G... or II 1/2D..., size Ø40			
Imp1	1	Impeller device, EnSaFoil (E125-E1900, D2(L), D3(L)) or Low Level (L600-L1700) or EnSaFerm (F450-F1900)	RI
Imp2-Imp10	1	Impeller device, EnSaFoil (E250-E1900, D2, D3) or EnSaFerm (F450-F1900)	RI

RI = Request Item. Article number available upon request by serial number or article number of the agitator.

		size: Ø40
Seal kits		
□	Seal kit, S, C/SiC, EPDM	TE2613000042
♦	Seal kit, S, C/SiC, FPM	TE2613000033
▲	Seal kit, S, C/SiC, FFKM	TE2613000314

Agitator ALT ATEX, shaft divided, marking II 1/2G... or II 1/2D..., size Ø50

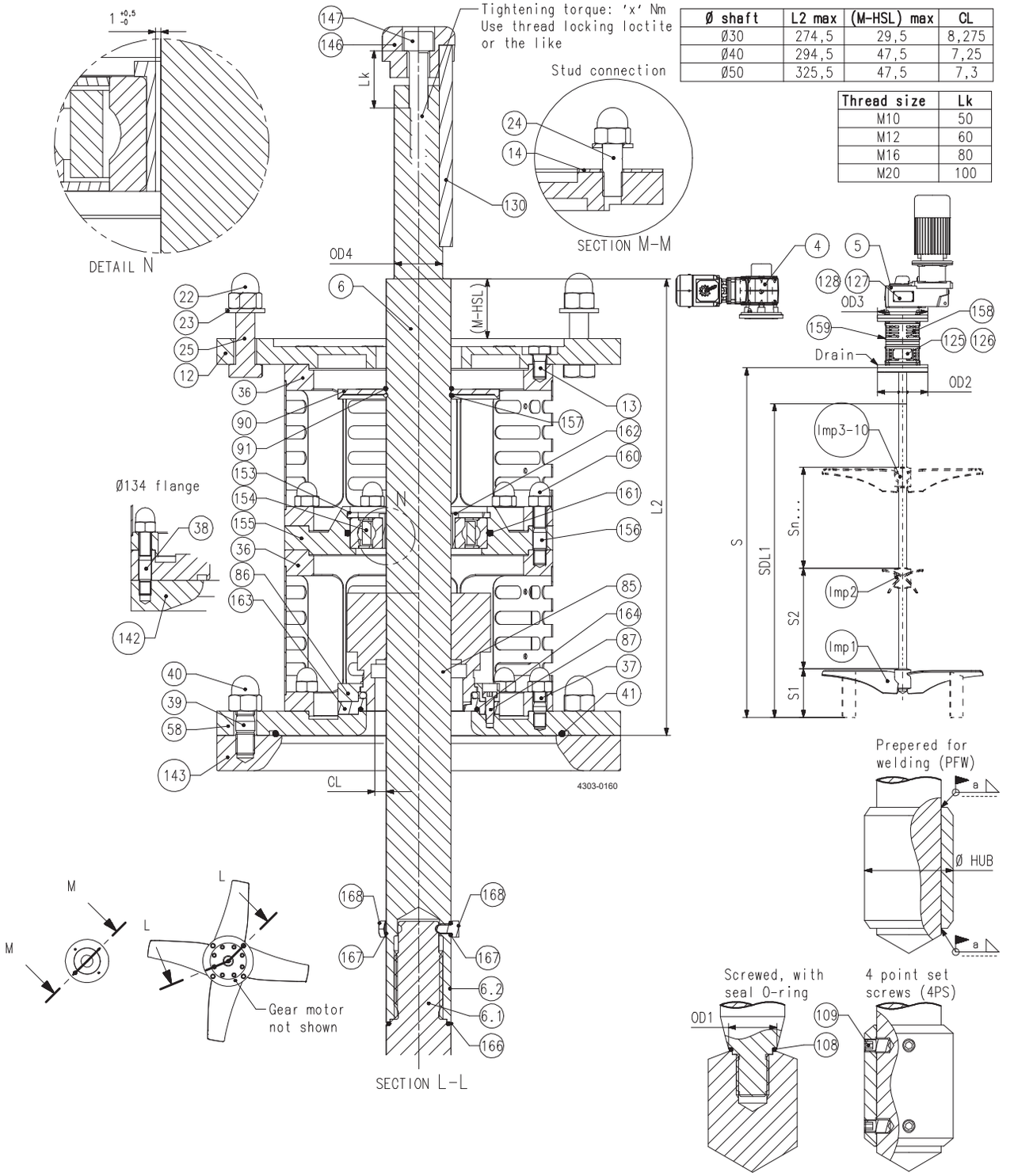

Ø shaft	L2 max	(M-HSL) max	CL
Ø30	274,5	29,5	8,275
Ø40	294,5	47,5	7,25
Ø50	325,5	47,5	7,3

Thread size	Lk
M10	50
M12	60
M16	80
M20	100

Pos	Qty	Denomination	size: Ø50
Agitator ALT ATEX, shaft divided, marking II 1/2G... or II 1/2D..., size Ø50			
4	1	GR gear motor, hollow shaft	RI
5	1	GP gear motor, hollow shaft	RI
6	1	Shaft divided	RI
12	1	Drive unit flange, (OD3=200), Sanitary / Industrial	TE26C3093800
	1	Drive unit flange, (OD3=250), Sanitary / Industrial	TE26C3065470
	1	Drive unit flange, (OD3=300), Sanitary / Industrial	TE26C303769A
	1	Drive unit flange, (OD3=200), UltraPure	TE26B3093800
	1	Drive unit flange, (OD3=250), UltraPure	TE26B3065470
	1	Drive unit flange, (OD3=300), UltraPure	TE26B303769A
13	8	Screw	TE2601000562
14	1	Disc spacer (for flange OD3=200)	TE2603093820
22	4	Cap nut (for flange OD3 = 200)	TE2601000355
	4	Cap nut (for flange OD3 = 300)	TE2601000261
23	4	Washer (for flange OD3 = 200)	TE2601000346
	4	Washer (for flange OD3 = 250)	TE2601000347
	4	Washer (for flange OD3 = 300)	TE2601000347
24	4	Stud (for flange OD3 = 200)	TE2601000307
	4	Stud (for flange OD3 = 250), length 30mm	TE2601000310
	4	Stud (for flange OD3 = 250), length 35mm	TE2601000393
25	4	Screw (for flange OD3 = 300)	TE2601000016
36	2	Lantern, Sanitary / Industrial	TE26C4010960
	2	Lantern, complete, UltraPure	TE26B5010960
37	8	Stud	TE2601000309
39	4	Stud (for flange AL, std. OD2=300)	TE2601000310
40	4	Cap nut (for flange AL, std. OD2=300)	TE2601000261
41	1	O-ring, FEP (for flange OD2=285)	TE2601000550
	1	O-ring, FEP (for flange OD2=300)	TE2601000075
	1	O-ring, FEP (for flange OD2=340)	TE2601000075
	1	O-ring, FEP (for flange OD2=342,9)	TE2601000076
58	1	Mounting flange, EN1092, std. (OD2=285), Sanitary / Industrial	TE26C3086690
	1	Mounting flange, AL, std. (OD2=300), Sanitary / Industrial	TE26C3087490
	1	Mounting flange, EN1092, std. (OD2=340), Sanitary / Industrial	TE26C306734B
	1	Mounting flange, ANSI, std. (OD2=342,9), Sanitary / Industrial	TE26C3076080
	1	Mounting flange, EN1092, std. (OD2=285), UltraPure	TE26B5086690
	1	Mounting flange, AL, std. (OD2=300), UltraPure	TE26B5087490
	1	Mounting flange, EN1092, std. (OD2=340), UltraPure	TE26B506734B
	1	Mounting flange, ANSI, std. (OD2=342,9), UltraPure	TE26B5076080
	1	Mounting flange, EN1092, std. (OD2=285), UltraPure w. E-polish	TE26A5086690
	1	Mounting flange, AL, std. (OD2=300), UltraPure w. E-polish	TE26A5087490
	1	Mounting flange, EN1092, std. (OD2=340), UltraPure w. E-polish	TE26A506734B
	1	Mounting flange, ANSI, std. (OD2=342,9), UltraPure w. E-polish	TE26A5076080
85 ♦	1	S seal, C/SiC, FPM, ATEX II 1/2GD c TX *)	TE2602000327
□	1	S seal, C/SiC, EPDM, ATEX II 1/2GD c TX *)	TE2602000328
▲	1	S seal, C/SiC, FFKM, ATEX II 1/2GD c TX *)	9615452501
86	1	Ring, retainer	TE260405346B
87	4	Screw	TE2601000326
	4	Screw **)	9615452401
90	1	Oil trap	TE2604039770
91 □♦	1	O-ring	TE2601000294
108	1	O-ring, FEP (for shaft size OD1=25)	TE2601000243
	1	O-ring, FEP (for shaft size OD1=30)	TE2601000244
	1	O-ring, FEP (for shaft size OD1=35)	TE2601000245
	1	O-ring, FEP (for shaft size OD1=40)	TE2601000246
	1	O-ring, FEP (for shaft size OD1=45)	TE2601000247
	1	O-ring, FEP (for shaft size OD1=50)	TE2601000248
109	4/Imp	Screw, pointed, M10	TE2601000443
	4/Imp	Screw, pointed, M12	TE2601000596
125	1	Name plate	9615273101
126	4	Rivet	TE2601000391
130	1	Parallel key (for shaft OD4=40), length = 140mm	9615377301
	1	Parallel key (for shaft OD4=40), length = 160mm	TE2601000678
146	1	Fixing element	9615269505
147	1	Screw	TE2601000665
153	1	Circlip, inner	9615430601
154	1	Bearing	9615431301
155	1	Flange, collision protection	9615426901
156	8	Stud	TE2601000022
157	1	Spring, ring	9615432401
158	4	Guard	9615383201
159	16	Screw	TE2601000031
160	16	Cap nut	TE2601000261

RI = Request Item. Article number available upon request by serial number or article number of the agitator.

*) The listed article numbers are for the complete seal. The seal-kit contains only the ceramic parts and elastomers.

Agitator ALT ATEX, shaft divided, marking II 1/2G... or II 1/2D..., size Ø50

Ø shaft	L2 max	(M-HSL) max	CL
Ø30	274,5	29,5	8,275
Ø40	294,5	47,5	7,25
Ø50	325,5	47,5	7,3

Thread size	Lk
M10	50
M12	60
M16	80
M20	100

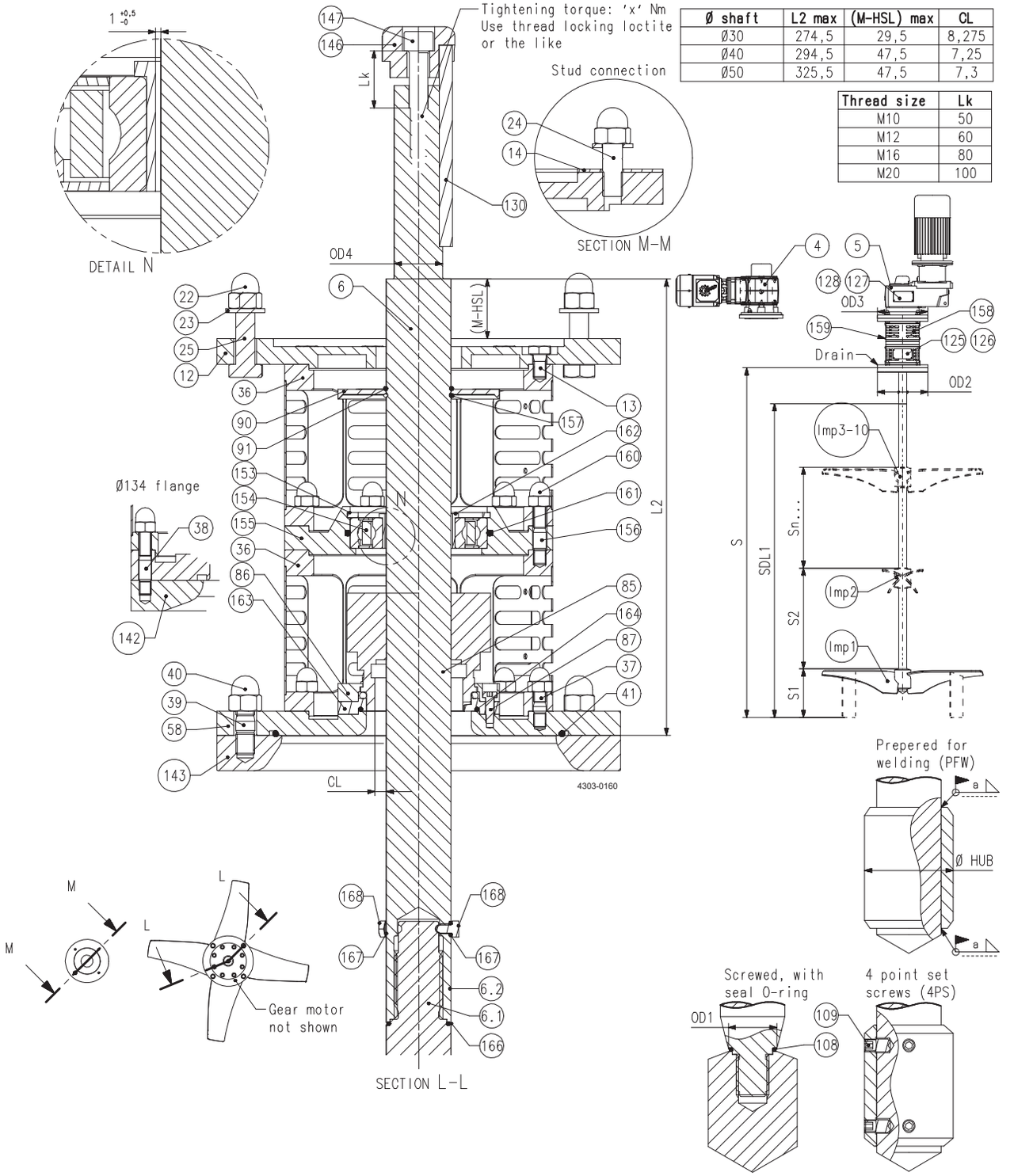

Pos	Qty	Denomination	size: Ø50
Agitator ALT ATEX, shaft divided, marking II 1/2G... or II 1/2D..., size Ø50			
161	1	O-ring	9615431801
162	1	Sleeve	9615428303
163	1	Drive ring, stationary **)	9615451703
164	1	O-ring, FEP**)	9615451901
166	1	O-ring, FEP	TE2601000248
167	2	O-ring, FEP	TE2601000542
168	2	Screw	9615489501
Imp1	1	Impeller device, EnSaFoil (E125-E1900, D2(L), D3(L)) or Low Level (L600-L1700) or EnSaFerm (F450-F1900)	RI
Imp2-Imp10	1	Impeller device, EnSaFoil (E250-E1900, D2, D3) or EnSaFerm (F450-F1900)	RI

RI = Request Item. Article number available upon request by serial number or article number of the agitator.

**) Only to be used when seal elastomer for pos. 85 is FFKM.

		size: Ø50
Seal kits		
□	**Seal kit, S, C/SiC, EPDM**	**TE2613000045**
♦	**Seal kit, S, C/SiC, FPM**	**TE2613000035**
▲	**Seal kit, S, C/SiC, FFKM**	**9615453801**

Agitator ALT ATEX, shaft divided, marking II 2G... or II 2D..., size Ø30

Thread size	Lk
M10	50
M12	60
M16	80
M20	100

Ø shaft	L2 max	(M-HSL) max	CL
Ø30	159,5	29,5	8,275
Ø40	179,5	47,5	7,25
Ø50	200,5	47,5	7,3

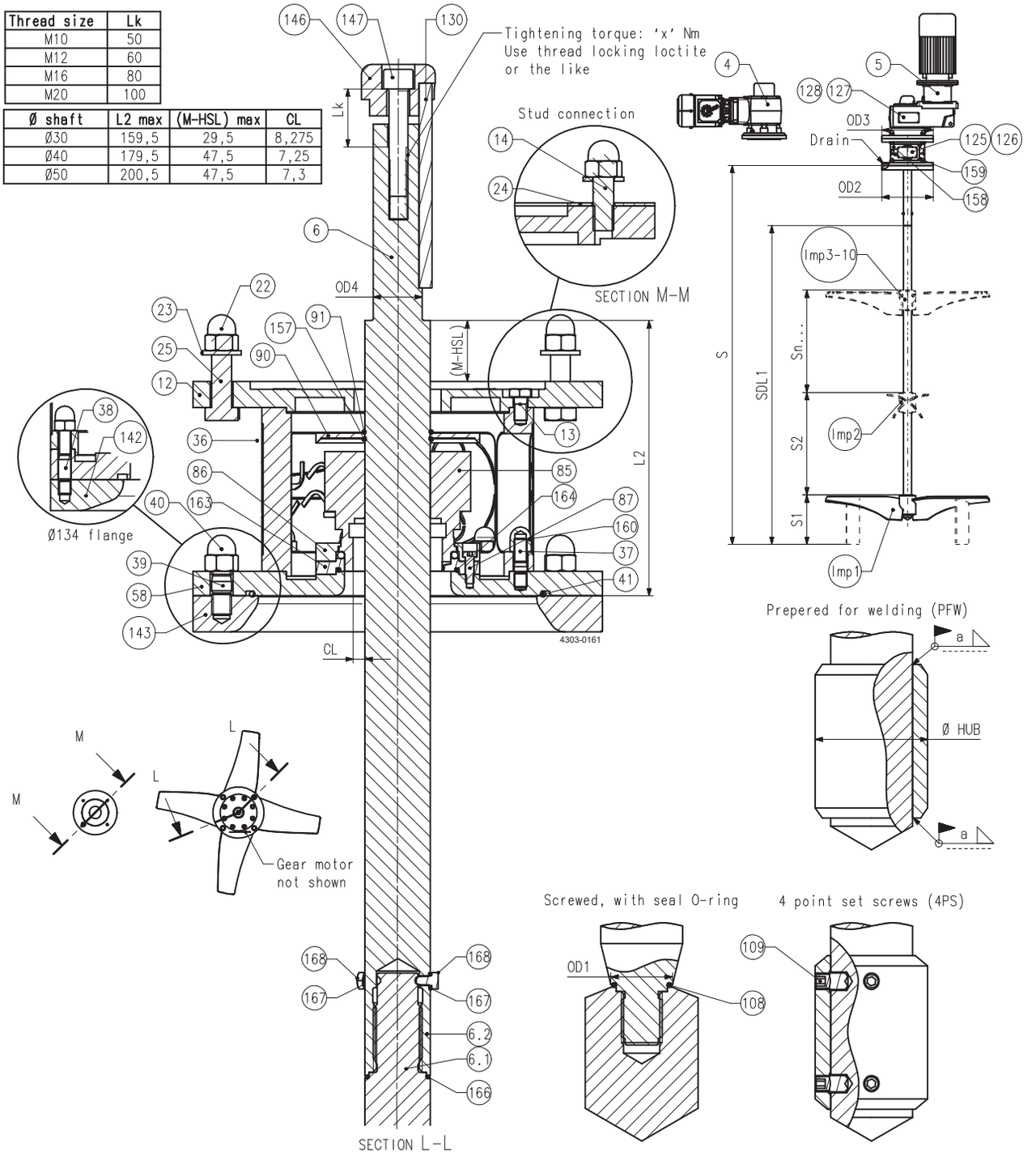

Pos	Qty	Denomination	size: Ø30
Agitator ALT ATEX, shaft divided, marking II 2G... or II 2D..., size Ø30			
4	1	GR gear motor, hollow shaft	RI
5	1	GP gear motor, hollow shaft	RI
6	1	Shaft divided	RI
12	1	Drive unit flange, (OD3=140), Sanitary / Industrial	TE26C3066960
	1	Drive unit flange, (OD3=160), Sanitary / Industrial	TE26C306016A
	1	Drive unit flange, (OD3=140), UltraPure	TE26B3066960
	1	Drive unit flange, (OD3=160), UltraPure	TE26B306016A
13	8	Screw	TE2601000098
22	4	Cap nut (for flange OD3 = 140)	TE2601000263
	4	Cap nut (for flange OD3 = 160)	TE2601000263
23	4	Washer (for flange OD3 = 140)	TE2601000349
	4	Washer (for flange OD3 = 160), height 2,5mm	TE2601094010
24	4	Stud (for flange OD3 = 140)	TE2601000312
	4	Stud (for flange OD3 = 160)	TE2601000034
36	2	Lantern, Sanitary / Industrial	TE26C401095A
	2	Lantern, UltraPure	TE26B501095A
37	8	Stud	TE2601000311
38	8	Stud	TE2601000112
39	4	Stud (for flange AL, std. OD2=200)	TE2601000307
40	4	Cap nut (for flange AL, std. OD2=200)	TE2601000355
41	1	O-ring, FEP (for flange AL, std. OD2=134)	TE2601000078
	1	O-ring, FEP (for flange AL, std. OD2=200)	TE2601000073
	1	O-ring, FEP (for flange EN1092, std. OD2=200)	TE2601000072
	1	O-ring, FEP (for flange EN1092, std. OD2=220)	TE2601000073
58	1	Mounting flange, AL, std. (OD2=134), Sanitary / Industrial	TE26C3071740
	1	Mounting flange, AL, std. (OD2=200), Sanitary / Industrial	TE26C306655A
	1	Mounting flange, EN1092-std. (OD2=200), Sanitary / Industrial	TE26C3068960
	1	Mounting flange, EN1092, std. (OD2=220), Sanitary / Industrial	TE26C306154B
	1	Mounting flange, AL, std. (OD2=134), UltraPure	TE26B5071740
	1	Mounting flange, AL, std. (OD2=200), UltraPure	TE26B506655A
	1	Mounting flange, EN1092-std. (OD2=200), UltraPure	TE26B5068960
	1	Mounting flange, EN1092, std. (OD2=220), UltraPure	TE26B506154B
	1	Mounting flange, AL, std. (OD2=134), UltraPure w. E-polish	TE26A5071740
	1	Mounting flange, AL, std. (OD2=200), UltraPure w. E-polish	TE26A506655A
	1	Mounting flange, EN1092-std. (OD2=200), UltraPure w. E-polish	TE26A5068960
	1	Mounting flange, EN1092, std. (OD2=220), UltraPure w. E-polish	TE26A506154B
85 ♦	1	S seal, C/SiC, FPM, ATEX II 2GD c TX *)	TE2602000303
□	1	S seal, C/SiC, EPDM, ATEX II 2GD c TX *)	TE2602000305
▲	1	S seal, C/SiC, FFKM, ATEX II 2GD c TX *)	9615453001
86	1	Ring, retainer	TE260406156C
87	4	Screw	TE2601000326
90	1	Oil trap	TE2604061570
91 □♦	1	O-ring	TE2601000287
108	1	O-ring, FEP (for shaft size OD1=25)	TE2601000243
	1	O-ring, FEP (for shaft size OD1=30)	TE2601000244
109	4/Imp	Screw, pointed, M6	TE2601000357
	4/Imp	Screw, pointed, M8	TE2601000358
	4/Imp	Screw, pointed, M10	TE2601000015
	4/Imp	Screw, pointed, M12	TE2601000212
125	1	Name plate	9615273101
126	4	Rivet	TE2601000391
130	1	Parallel key	9615362101
146	1	Fixing element	9615269506
147	1	Screw	9615362001
157	1	Spring, ring	9615432201
158	2	Guard	9615272801
159	8	Screw	TE2601000031
160	8	Cap nut	TE2601000262
163	1	Drive ring, stationary **)	9615451701
164	1	O-ring, FEP **)	TE2601000189
166	1	O-ring, FEP	TE2601000244
167	2	O-ring, FEP	TE2601000542
168	2	Screw	TE2607221200
87	4	Screw **)	9615452401

RI = Request Item. Article number available upon request by serial number or article number of the agitator.

*) The listed article numbers are for the complete seal. The seal-kit contains only the ceramic parts and elastomers.

**) Only to be used when seal elastomer for pos. 85 is FFKM.

Agitator ALT ATEX, shaft divided, marking II 2G... or II 2D..., size Ø30

Thread size	Lk
M10	50
M12	60
M16	80
M20	100

Ø shaft	L2 max	(M-HSL) max	CL
Ø30	159,5	29,5	8,275
Ø40	179,5	47,5	7,25
Ø50	200,5	47,5	7,3

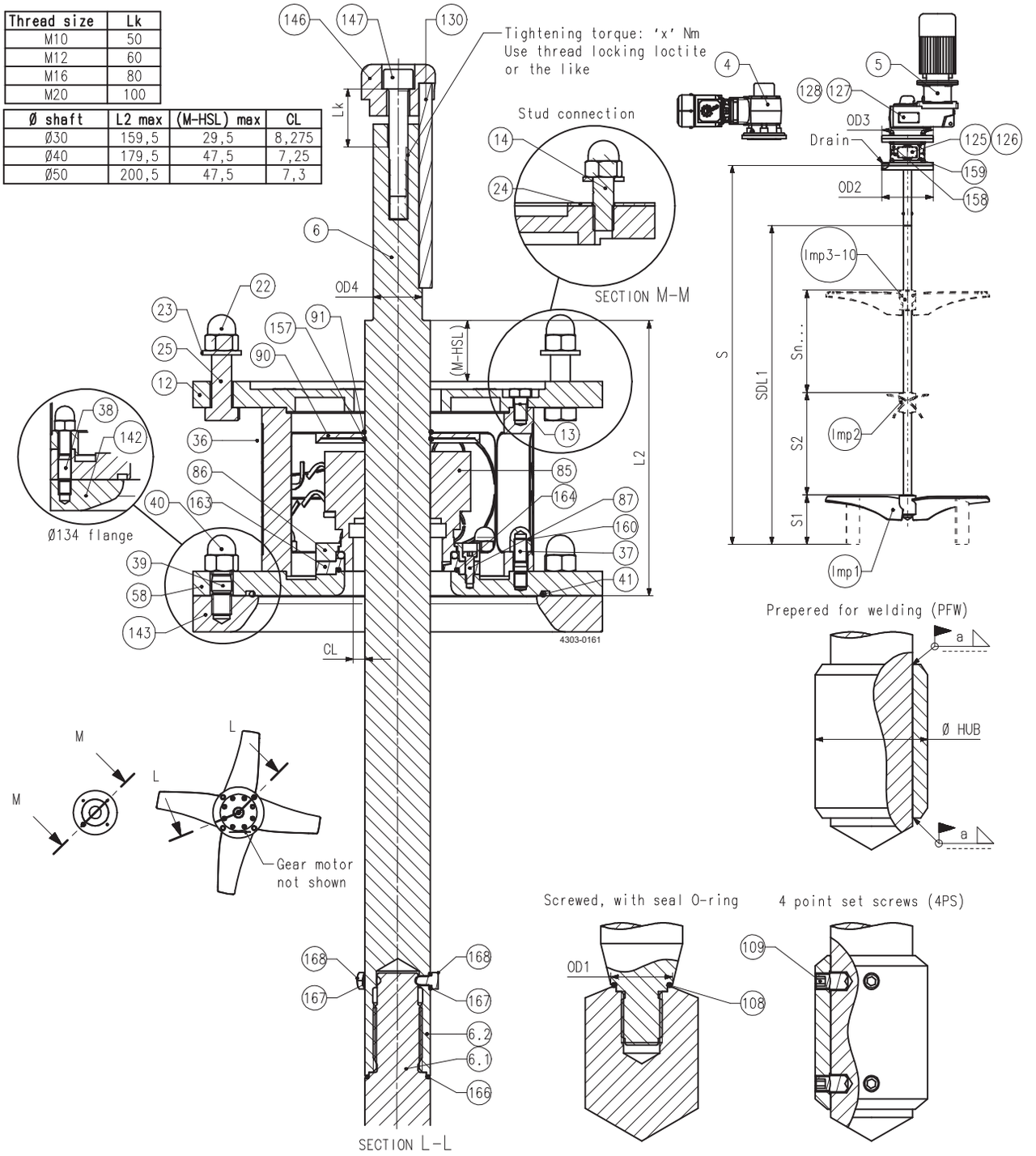

Pos	Qty	Denomination	size: Ø30

Agitator ALT ATEX, shaft divided, marking II 2G... or II 2D..., size Ø30

Imp1	1	Impeller device, EnSaFoil (E125-E1900, D2(L), D3(L)) or Low Level (L600-L1700) or EnSaFerm (F450-F1900)	RI
Imp2-Imp10	1	Impeller device, EnSaFoil (E250-E1900, D2, D3) or EnSaFerm (F450-F1900)	RI

RI = Request Item. Article number available upon request by serial number or article number of the agitator.

		size: Ø30

Seal kits

□	**Seal kit, S, C/SiC, EPDM**	**TE2613000040**
♦	**Seal kit, S, C/SiC, FPM**	**TE2613000031**
▲	**Seal kit, S, C/SiC, FFKM**	**TE2613000302**

Agitator ALT ATEX, shaft divided, marking II 2G... or II 2D..., size Ø40

Thread size	Lk
M10	50
M12	60
M16	80
M20	100

Ø shaft	L2 max	(M-HSL) max	CL
Ø30	159,5	29,5	8,275
Ø40	179,5	47,5	7,25
Ø50	200,5	47,5	7,3

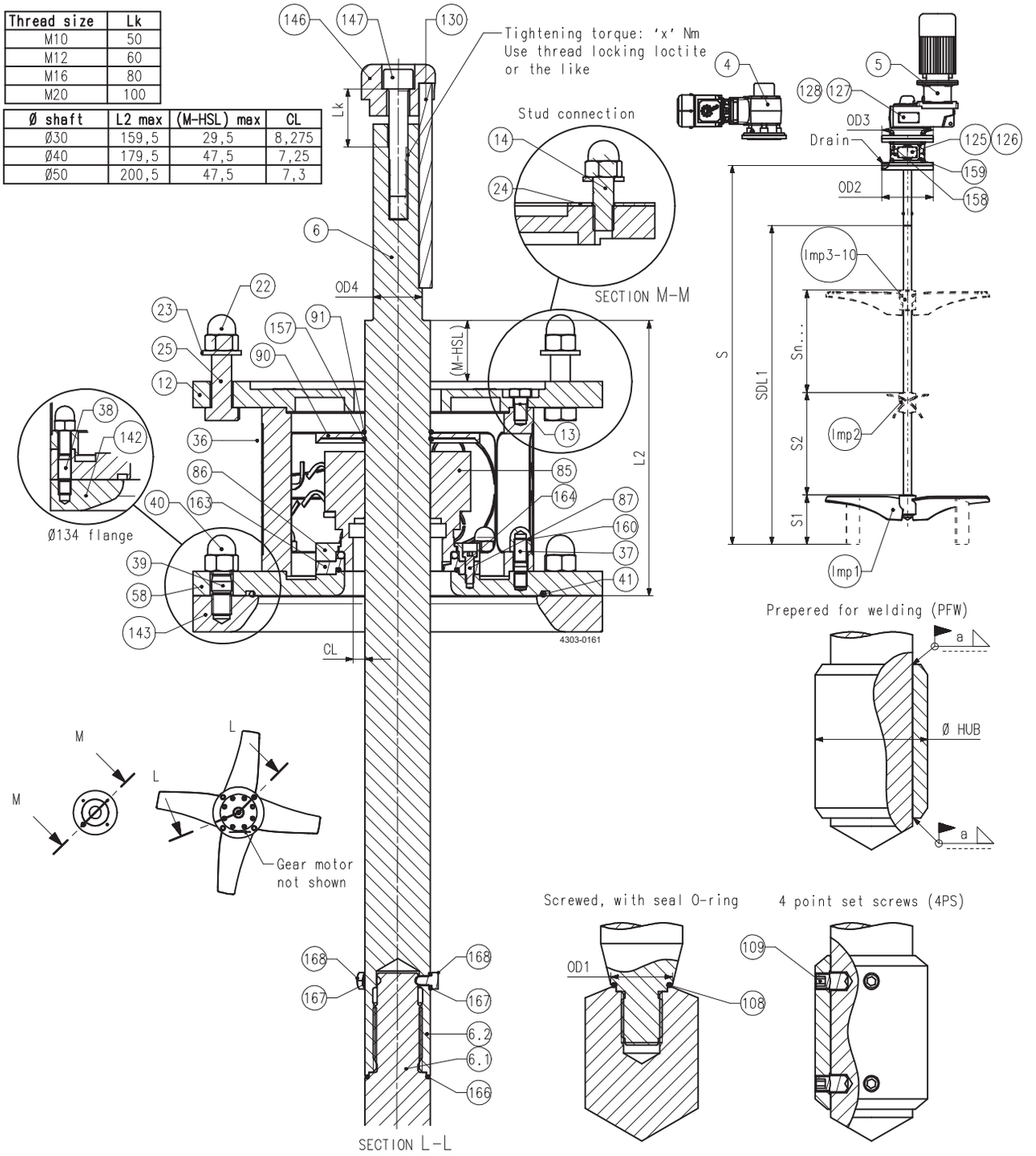

Pos	Qty	Denomination	size: Ø40
Agitator ALT ATEX, shaft divided, marking II 2G... or II 2D..., size Ø40			
4	1	GR gear motor, hollow shaft	RI
5	1	GP gear motor, hollow shaft	RI
6	1	Shaft divided	RI
12	1	Drive unit flange, (OD3=200), Sanitary / Industrial	TE26C304913A
	1	Drive unit flange, (OD3=250), Sanitary / Industrial	TE26C306126A
	1	Drive unit flange, (OD3=200), UltraPure	TE26B304913A
	1	Drive unit flange, (OD3=250), UltraPure	TE26B306126A
13	8	Screw	TE2601000554
22	4	Cap nut (for flange OD3 = 200)	TE2601000355
23	4	Washer (for flange OD3 = 200)	TE2601000346
	4	Washer (for flange OD3 = 250)	TE2601000347
	4	Washer (for flange OD3 = 250), height 4mm	TE2601094060
24	4	Stud (for flange OD3 = 200)	TE2601000307
25	4	Screw (for flange OD3 = 250), length 45mm	TE2601000342
	4	Screw (for flange OD3 = 250), length 50mm	TE2601000531
36	2	Lantern, Sanitary / Industrial	TE26C4010110
	2	Lantern, UltraPure	TE26B5010110
37	8	Stud	TE2601000312
39	4	Stud (for flange AL, std. OD2=250)	TE2601000309
40	4	Cap nut (for flange AL, std. OD2=250)	TE2601000261
41	1	O-ring, FEP (for flange OD2=250)	TE2601000074
	1	O-ring, FEP (for flange OD2=285)	TE2601000074
58	1	Mounting flange, AL, std. (OD2=250), Sanitary / Industrial	TE26C3069460
	1	Mounting flange, EN1092, std. (OD2=250), Sanitary / Industrial	TE26C3068980
	1	Mounting flange, EN1092, std. (OD2=285), Sanitary / Industrial	TE26C3070940
	1	Mounting flange, AL, std. (OD2=250), UltraPure	TE26B5069460
	1	Mounting flange, EN1092, std. (OD2=250), UltraPure	TE26B5068980
	1	Mounting flange, EN1092, std. (OD2=285), UltraPure	TE26B5070940
	1	Mounting flange, AL, std. (OD2=250), UltraPure w. E-polish	TE26A5069460
	1	Mounting flange, EN1092, std. (OD2=250), UltraPure w. E-polish	TE26A5068980
	1	Mounting flange, EN1092, std. (OD2=285), UltraPure w. E-polish	TE26A5070940
85 ♦	1	S seal, C/SiC, FPM, ATEX II 2GD c TX *)	TE2602000306
□	1	S seal, C/SiC, EPDM, ATEX II 2GD c TX *)	TE2602000309
▲	1	S seal, C/SiC, FFKM, ATEX II 2GD c TX *)	9615453101
86	1	Ring, retainer	TE260405177B
87	4	Screw	TE2601000326
	4	Screw **)	9615452401
90	1	Oil trap	TE2604055860
91 □♦	1	O-ring	TE2601000292
108	1	O-ring, FEP (for shaft size OD1=25)	TE2601000243
	1	O-ring, FEP (for shaft size OD1=30)	TE2601000244
	1	O-ring, FEP (for shaft size OD1=35)	TE2601000245
	1	O-ring, FEP (for shaft size OD1=40)	TE2601000246
109	4/Imp	Screw, pointed, M8	TE2601000358
	4/Imp	Screw, pointed, M10	TE2601000015
	4/Imp	Screw, pointed, M12	TE2601000212
125	1	Name plate	9615273101
126	4	Rivet	TE2601000391
130	1	Parallel key (for shaft OD4=30)	9615362101
	1	Parallel key (for shaft OD4=35)	9615316901
146	1	Fixing element (for shaft OD4=30)	9615269503
	1	Fixing element (for shaft OD4=35)	9615269504
147	1	Screw (for shaft OD4=30)	9615362001
	1	Screw (for shaft OD4=35)	9615317001
157	1	Spring, ring	9615432301
158	2	Guard	9615316701
159	8	Screw	TE2601000031
160	8	Cap nut	TE2601000263
163	1	Drive ring, stationary **)	9615451702
164	1	O-ring, FEP **)	TE2601000610
166	1	O-ring, FEP	TE2601000246
167	2	O-ring, FEP	TE2601000542
168	2	Screw	TE2607221200

RI = Request Item. Article number available upon request by serial number or article number of the agitator.

*) The listed article numbers are for the complete seal. The seal-kit contains only the ceramic parts and elastomers.

**) Only to be used when seal elastomer for pos. 85 is FFKM.

Agitator ALT ATEX, shaft divided, marking II 2G... or II 2D..., size Ø40

Thread size	Lk
M10	50
M12	60
M16	80
M20	100

Ø shaft	L2 max	(M-HSL) max	CL
Ø30	159,5	29,5	8,275
Ø40	179,5	47,5	7,25
Ø50	200,5	47,5	7,3

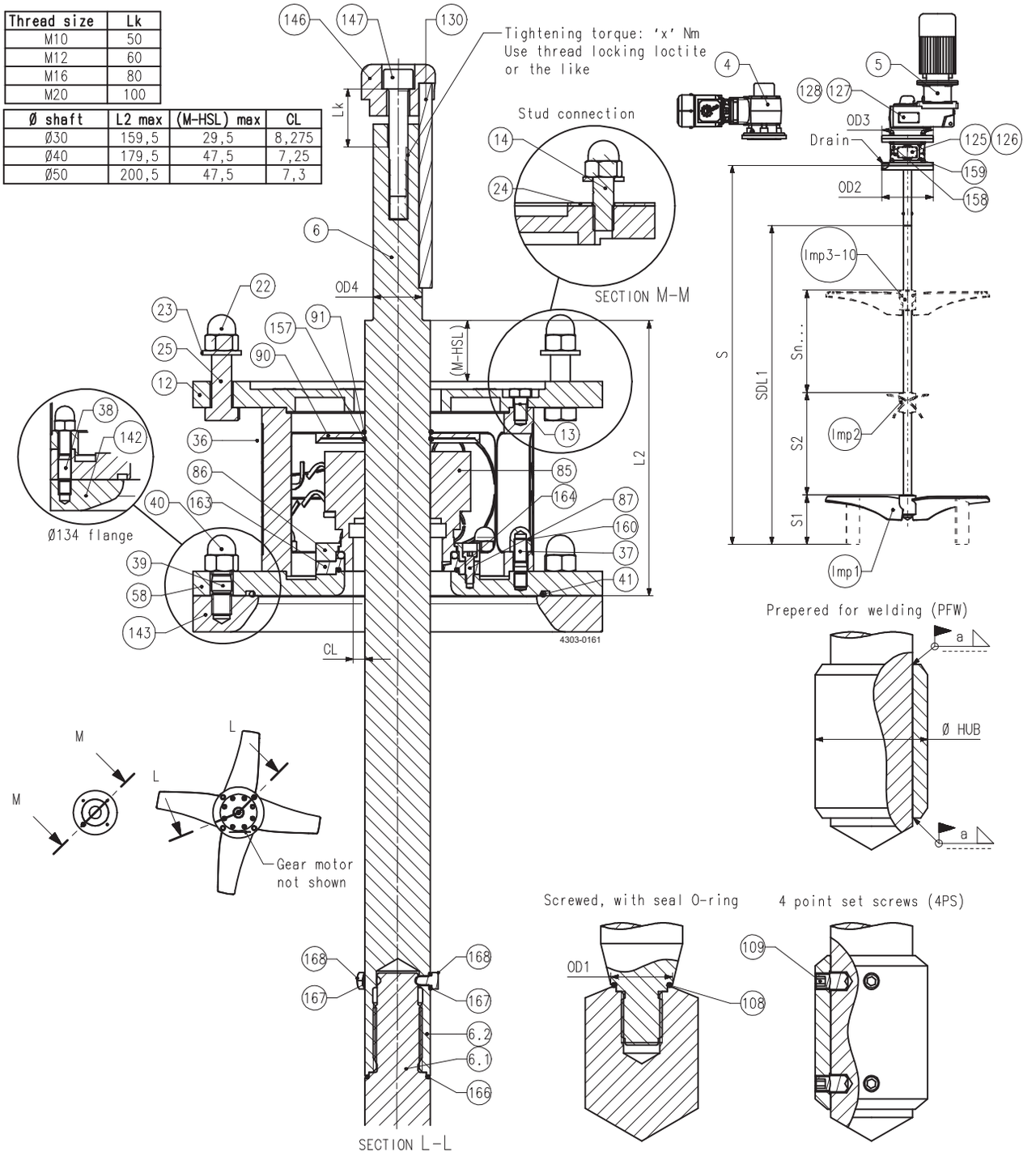

Pos	Qty	Denomination	size: Ø40

Agitator ALT ATEX, shaft divided, marking II 2G... or II 2D..., size Ø40

Imp1	1	Impeller device, EnSaFoil (E125-E1900, D2(L), D3(L)) or Low Level (L600-L1700) or EnSaFerm (F450-F1900)	RI
Imp2-Imp10	1	Impeller device, EnSaFoil (E250-E1900, D2, D3) or EnSaFerm (F450-F1900)	RI

RI = Request Item. Article number available upon request by serial number or article number of the agitator.

		size: Ø40

Seal kits

□	**Seal kit, S, C/SiC, EPDM**	**TE2613000042**
♦	**Seal kit, S, C/SiC, FPM**	**TE2613000033**
▲	**Seal kit, S, C/SiC, FFKM**	**TE2613000314**

Agitator ALT ATEX, shaft divided, marking II 2G... or II 2D..., size Ø50

Thread size	Lk
M10	50
M12	60
M16	80
M20	100

Ø shaft	L2 max	(M-HSL) max	CL
Ø30	159,5	29,5	8,275
Ø40	179,5	47,5	7,25
Ø50	200,5	47,5	7,3

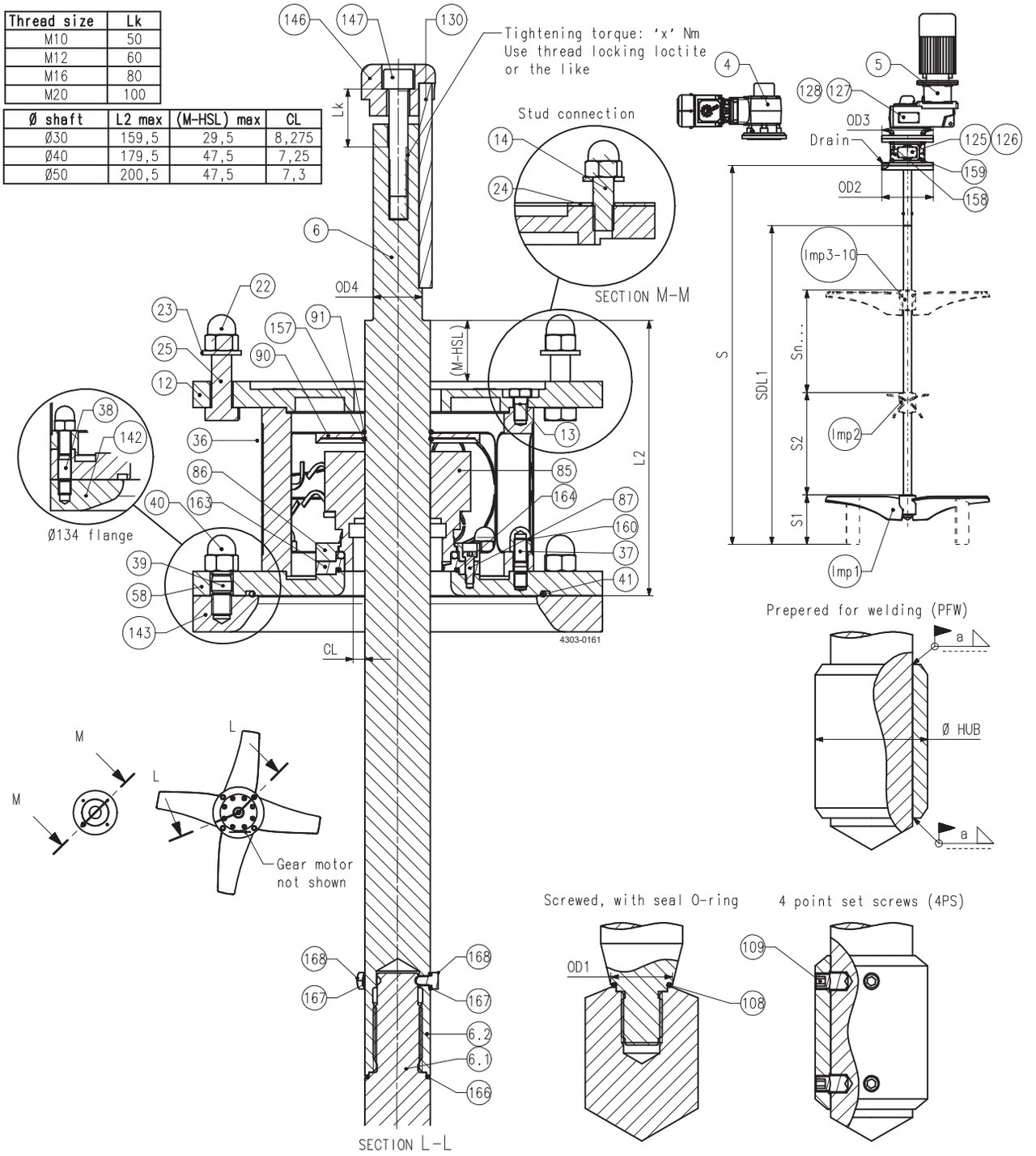

Pos		Qty	Denomination	size: Ø50
Agitator ALT ATEX, shaft divided, marking II 2G... or II 2D..., size Ø50				
4		1	GR gear motor, hollow shaft	RI
5		1	GP gear motor, hollow shaft	RI
6		1	Shaft divided	RI
12		1	Drive unit flange, (OD3=200), Sanitary / Industrial	TE26C304913A
		1	Drive unit flange, (OD3=250), Sanitary / Industrial	TE26C306126A
		1	Drive unit flange, (OD3=200), UltraPure	TE26B304913A
		1	Drive unit flange, (OD3=250), UltraPure	TE26B306126A
13		8	Screw	TE2601000554
22		4	Cap nut (for flange OD3 = 200)	TE2601000355
23		4	Washer (for flange OD3 = 200)	TE2601000346
		4	Washer (for flange OD3 = 250)	TE2601000347
		4	Washer (for flange OD3 = 250), height 4mm	TE2601094060
24		4	Stud (for flange OD3 = 200)	TE2601000307
25		4	Screw (for flange OD3 = 250), length 45mm	TE2601000342
		4	Screw (for flange OD3 = 250), length 50mm	TE2601000531
36		2	Lantern, Sanitary / Industrial	TE26C4010110
		2	Lantern, UltraPure	TE26B5010110
37		8	Stud	TE2601000312
39		4	Stud (for flange AL, std. OD2=250)	TE2601000309
40		4	Cap nut (for flange AL, std. OD2=250)	TE2601000261
41		1	O-ring, FEP (for flange OD2=250)	TE2601000074
		1	O-ring, FEP (for flange OD2=285)	TE2601000074
58		1	Mounting flange, AL, std. (OD2=250), Sanitary / Industrial	TE26C3069460
		1	Mounting flange, EN1092, std. (OD2=250), Sanitary / Industrial	TE26C3068980
		1	Mounting flange, EN1092, std. (OD2=285), Sanitary / Industrial	TE26C3070940
		1	Mounting flange, AL, std. (OD2=250), UltraPure	TE26B5069460
		1	Mounting flange, EN1092, std. (OD2=250), UltraPure	TE26B5068980
		1	Mounting flange, EN1092, std. (OD2=285), UltraPure	TE26B5070940
		1	Mounting flange, AL, std. (OD2=250), UltraPure w. E-polish	TE26A5069460
		1	Mounting flange, EN1092, std. (OD2=250), UltraPure w. E-polish	TE26A5068980
		1	Mounting flange, EN1092, std. (OD2=285), UltraPure w. E-polish	TE26A5070940
85	♦	1	S seal, C/SiC, FPM, ATEX II 2GD c TX *)	TE2602000306
	□	1	S seal, C/SiC, EPDM, ATEX II 2GD c TX *)	TE2602000309
	▲	1	S seal, C/SiC, FFKM, ATEX II 2GD c TX *)	9615453101
86		1	Ring, retainer	TE260405177B
87		4	Screw	TE2601000326
		4	Screw **)	9615452401
90		1	Oil trap	TE2604055860
91	□♦	1	O-ring	TE2601000292
108		1	O-ring, FEP (for shaft size OD1=25)	TE2601000243
		1	O-ring, FEP (for shaft size OD1=30)	TE2601000244
		1	O-ring, FEP (for shaft size OD1=35)	TE2601000245
		1	O-ring, FEP (for shaft size OD1=40)	TE2601000246
109		4/Imp	Screw, pointed, M8	TE2601000358
		4/Imp	Screw, pointed, M10	TE2601000015
		4/Imp	Screw, pointed, M12	TE2601000212
125		1	Name plate	9615273101
126		4	Rivet	TE2601000391
130		1	Parallel key (for shaft OD4=30)	9615362101
		1	Parallel key (for shaft OD4=35)	9615316901
146		1	Fixing element (for shaft OD4=30)	9615269503
		1	Fixing element (for shaft OD4=35)	9615269504
147		1	Screw (for shaft OD4=30)	9615362001
		1	Screw (for shaft OD4=35)	9615317001
157		1	Spring, ring	9615432301
158		2	Guard	9615316701
159		8	Screw	TE2601000031
160		8	Cap nut	TE2601000263
163		1	Drive ring, stationary **)	9615451702
164		1	O-ring, FEP **)	TE2601000610
166		1	O-ring, FEP	TE2601000248
167		2	O-ring, FEP	TE2601000542
168		2	Screw	9615489501

RI = Request Item. Article number available upon request by serial number or article number of the agitator.

*) The listed article numbers are for the complete seal. The seal-kit contains only the ceramic parts and elastomers.

**) Only to be used when seal elastomer for pos. 85 is FFKM.

Agitator ALT ATEX, shaft divided, marking II 2G... or II 2D..., size Ø50

Thread size	Lk
M10	50
M12	60
M16	80
M20	100

Ø shaft	L2 max	(M-HSL) max	CL
Ø30	159,5	29,5	8,275
Ø40	179,5	47,5	7,25
Ø50	200,5	47,5	7,3

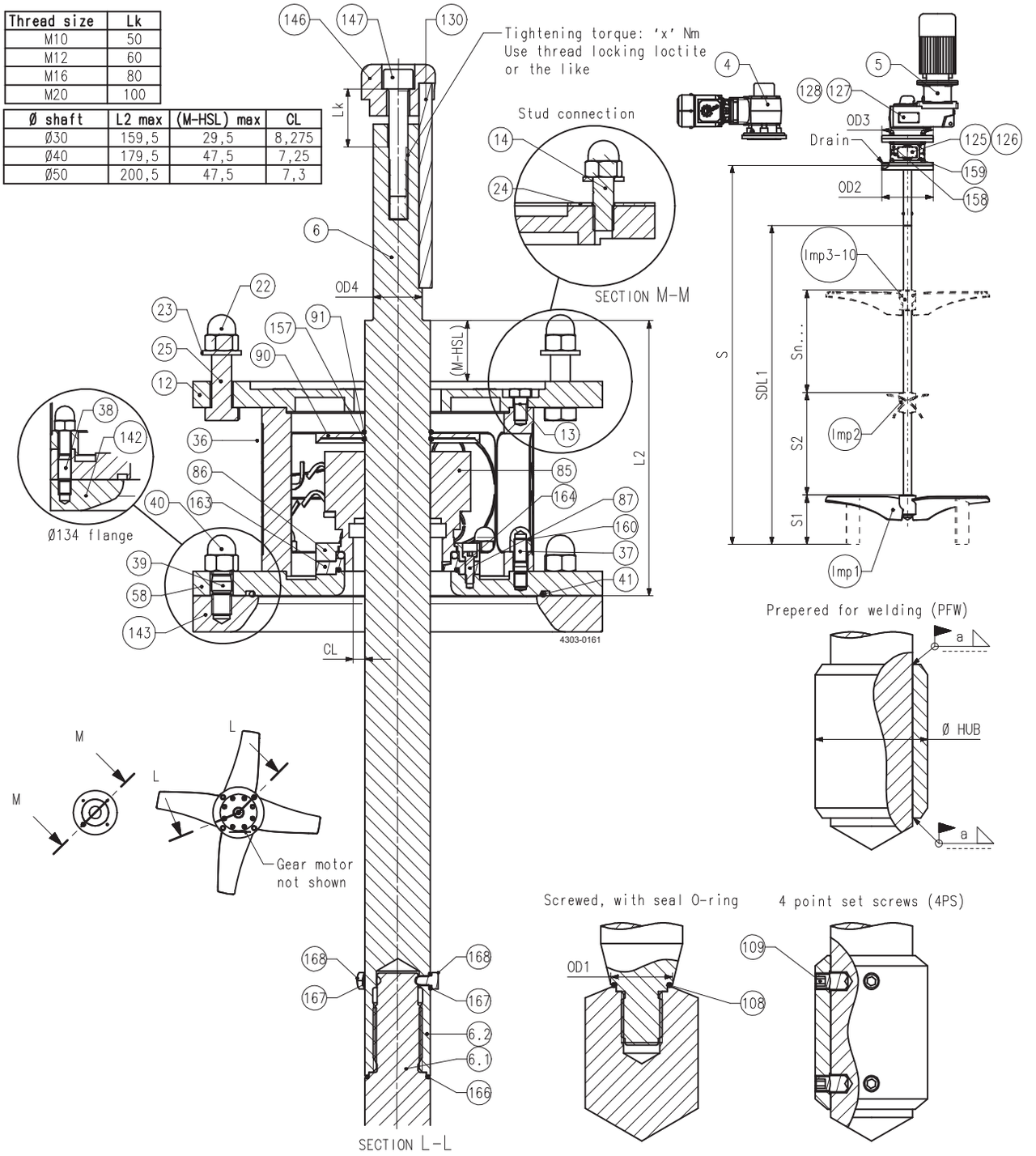

Pos	Qty	Denomination	size: Ø50

Agitator ALT ATEX, shaft divided, marking II 2G... or II 2D..., size Ø50

Imp1	1	Impeller device, EnSaFoil (E125-E1900, D2(L), D3(L)) or Low Level (L600-L1700) or EnSaFerm (F450-F1900)	RI
Imp2-Imp10	1	Impeller device, EnSaFoil (E250-E1900, D2, D3) or EnSaFerm (F450-F1900)	RI

RI = Request Item. Article number available upon request by serial number or article number of the agitator.

		size: Ø50

Seal kits

□	**Seal kit, S, C/SiC, EPDM**	**TE2613000042**
♦	**Seal kit, S, C/SiC, FPM**	**TE2613000033**
▲	**Seal kit, S, C/SiC, FFKM**	**TE2613000314**

Not manufactured anymore

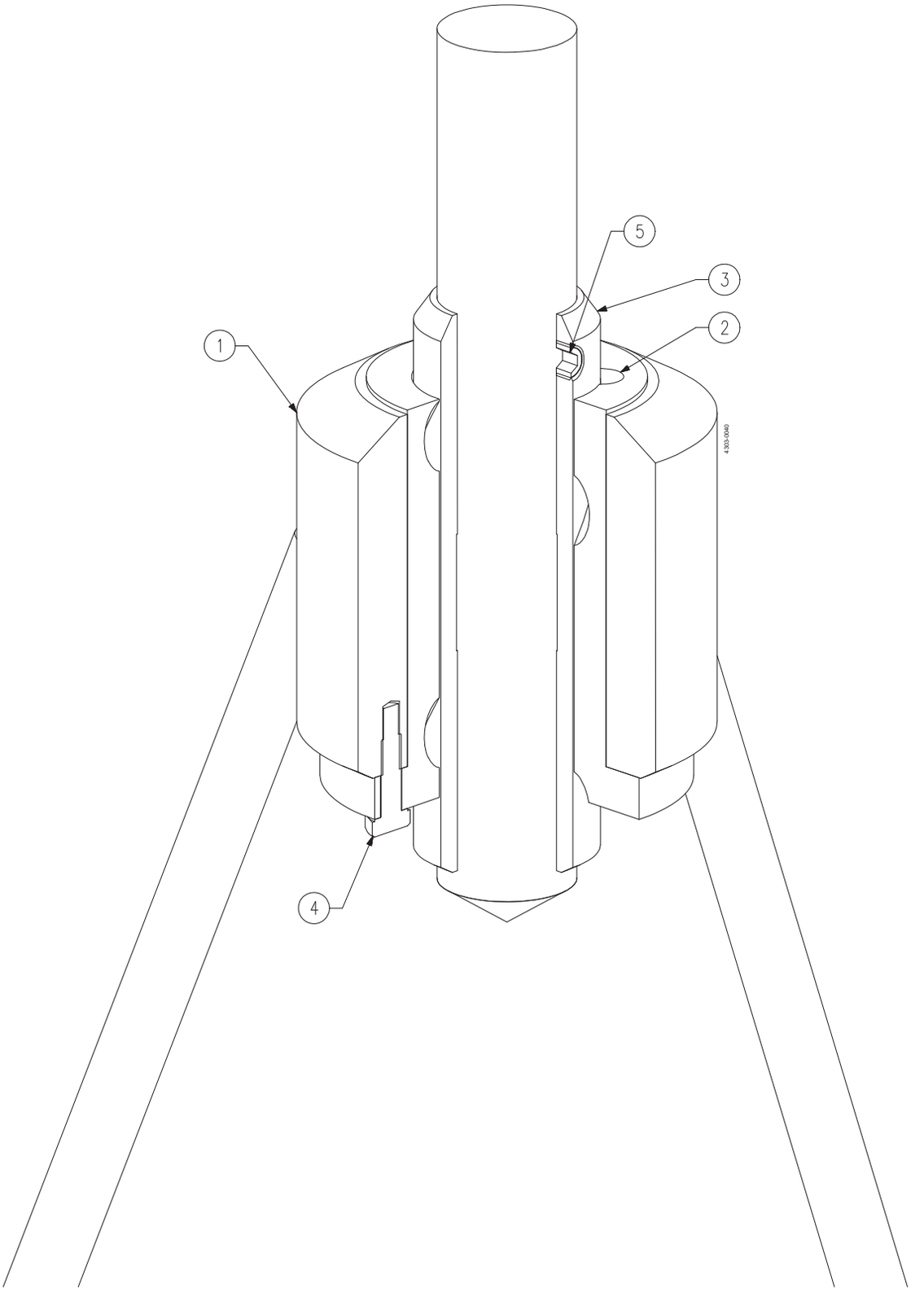

Pos		Qty	Denomination	size: Ø25	size: Ø30	size: Ø35	size: Ø40
1		1	Bottom steady support	TE26C504149A	TE26C504149A	TE26C504149A	TE26C501852A
		1	Bottom steady support	TE26C504149A	TE26C501852A	TE26C501852A	TE26C5023060
2	□	1	Bushing, PTFE	TE2607041510	TE2607041450	TE2607041500	TE260702356B
	♦	1	Bushing, PTFE	TE2607041500	TE260702356B	TE260701849B	TE260702278B
3	♦	1	Wear sleeve	TE26C7034270	TE26C7034280	TE26C7034290	TE26C7034300
4		1	Screw, special	TE2607018550	TE2607018550	TE2607018550	TE2607018550
5		2	Screw, pointed	TE2601000358	TE2601000358	TE2601000358	TE2601000358

	size: Ø25	size: Ø30	size: Ø35	size: Ø40
Spare part kits				
□ Spare part kit, BS1	TE2613000133	TE2613000134	TE2613000135	TE2613000136
♦ Spare part kit, BS1 + wear sleeve	TE2613000165	TE2613000166	TE2613000167	TE2613000168

Pos		Qty	Denomination	size: Ø45	size: Ø50	size: Ø55	size: Ø60
1		1	Bottom steady support	TE26C501852A	TE26C5023060	TE26C5023060	TE26C5023050
		1	Bottom steady support	TE26C5023060	TE26C5023050	TE26C5023050	TE26C5023050
2	□	1	Bushing, PTFE	TE260701849B	TE260702278B	TE260702240B	TE2607063040
	♦	1	Bushing, PTFE	TE260702240B	TE2607063040	TE2607063050	TE2607063060
3	♦	1	Wear sleeve	TE26C703894B	TE26C7034310	TE26C7034320	TE26C7034330
4		1	Screw, special	TE2607018550	TE2607018550	TE2607018550	
		3	Screw, special				TE2607018550
5		2	Screw, pointed	TE2601000358	TE2601000358	TE2601000358	TE2601000358

	size: Ø45	size: Ø50	size: Ø55	size: Ø60
Spare part kits				
□ Spare part kit, BS1	TE2613000029	TE2613000030	TE2613000178	TE2613000179
♦ Spare part kit, BS1 + wear sleeve	TE2613000169	TE2613000170	TE2613000171	TE2613000172

Not manufactured anymore

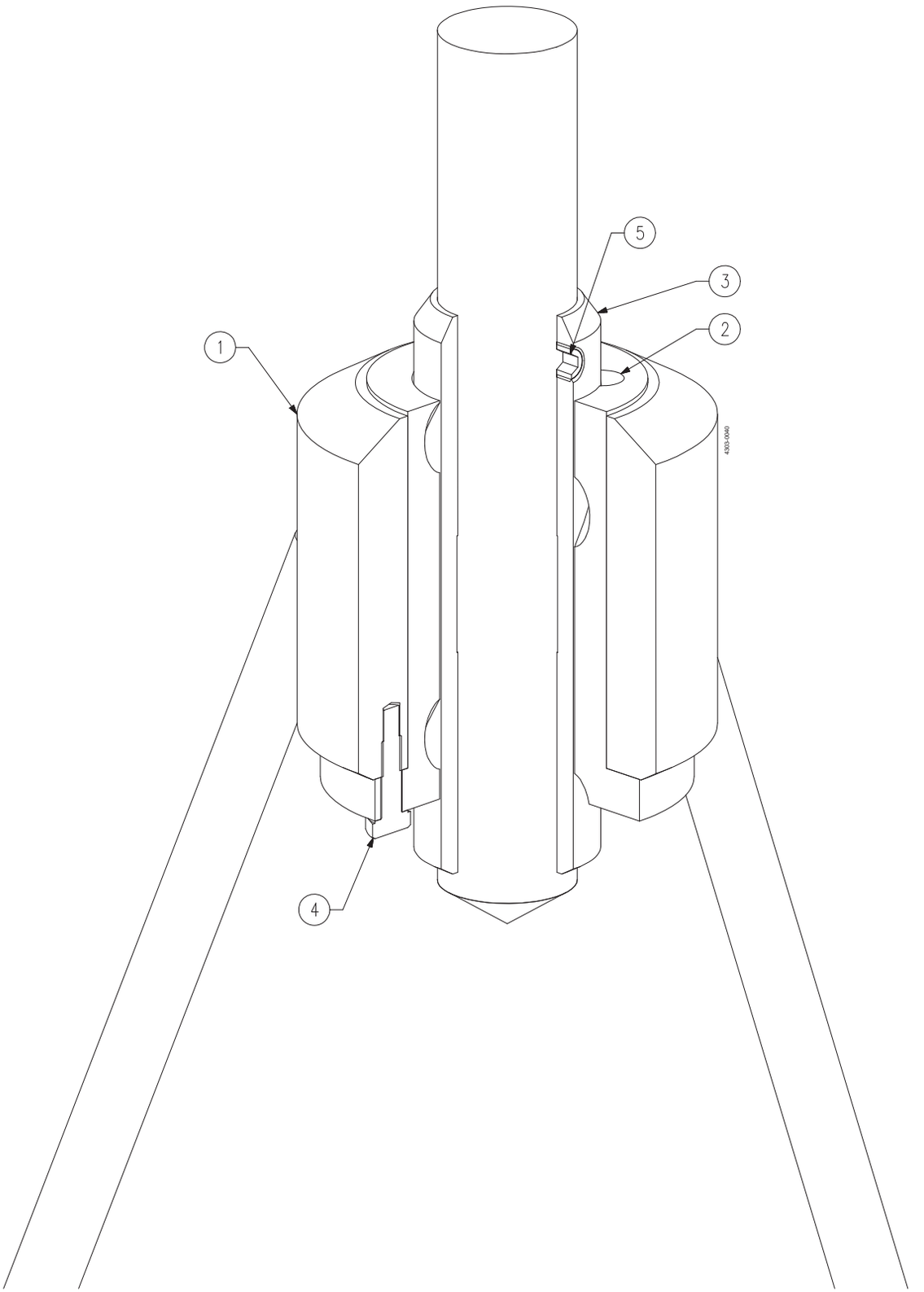

Pos		Qty	Denomination	size: Ø65	size: Ø70	size: Ø75	size: Ø80
1		1	Bottom steady support	TE26C5023050	TE26C5023050	TE26C5023050	TE26C5079410
		1	Bottom steady support	TE26C5023050	TE26C5079410	TE26C5079410	TE26C5079410
2	□	1	Bushing, PTFE	TE2607063050	TE2607063060	TE2607063070	TE2607079420
	♦	1	Bushing, PTFE	TE2607063070	TE2607079420	TE2607079430	TE2607079440
3	♦	1	Wear sleeve	TE26C7034340	TE26C7034350	TE26C7034360	TE26C7034370
4		3	Screw, special	TE2607018550	TE2607018550	TE2607018550	TE2607018550
5		2	Screw, pointed	TE2601000358	TE2601000358	TE2601000358	TE2601000358

	size: Ø65	size: Ø70	size: Ø75	size: Ø80
Spare part kits				
□ Spare part kit, BS1	TE2613000180	TE2613000186	TE2613000187	TE2613000188
♦ Spare part kit, BS1 + wear sleeve	TE2613000173	TE2613000174	TE2613000175	TE2613000177

Pos		Qty	Denomination	size: Ø90
1		1	Bottom steady support	TE26C5079410
2	□	1	Bushing, PTFE	TE2607079440
4		3	Screw, special	TE2607018550

	size: Ø90
Spare part kits	
□ Spare part kit, BS1	TE2613000189

Not manufactured anymore

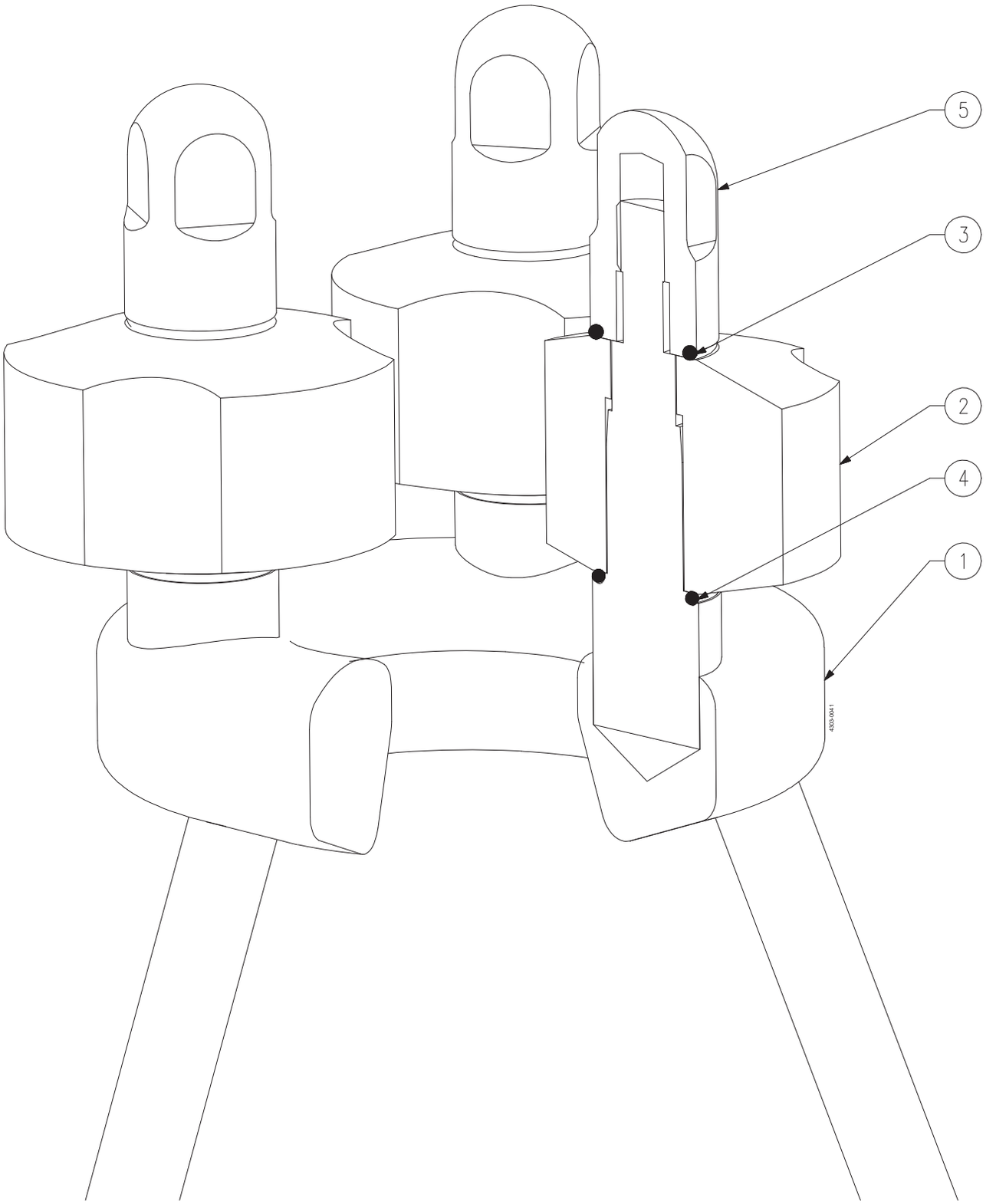

Pos		Qty	Denomination	size: Ø35/Ø40/Ø50	size: Ø55/Ø65/Ø75	size: Ø60/Ø70/Ø80
1		1	Bottom steady support	TE26C5033220	TE26C5029100	TE26C5029100
2	□◆	3	Bushing, PTFE	TE260702681A	TE2607222730	TE2607222850
3	□	3	O-ring, FPM	TE2601000639	TE2601000677	TE2601000677
4	□	3	O-ring, FPM	TE2601000639	TE2601000640	TE2601000640
3	◆	3	O-ring, EPDM	TE2601000626	TE2601000676	TE2601000676
4	◆	3	O-ring, EPDM	TE2601000626	TE2601000625	TE2601000625
5		3	Nut, special	TE26C7026860	TE26C7222720	TE26C7222720

		size: Ø35/Ø40/Ø50	size: Ø55/Ø65/Ø75	size: Ø60/Ø70/Ø80
Spare part kits				
□	Spare part kit, BS2, FPM	TE2613209210	TE2613222900	TE2613222910
◆	Spare part kit, BS2, EPDM	TE2613026830	TE2613222740	TE2613222840

1.3 Mixers

For mixing or stirring your products.



Spare parts

LeviMag/LeviMag UltraPure product overview - WP50 . . . . . 1.3.234
LeviMag/LeviMag UltraPure product overview - WP80 . . . . . 1.3.236
LeviMag/LeviMag UltraPure drive unit – WP50 . . . . . 1.3.238
LeviMag/LeviMag UltraPure drive unit – WP80 . . . . . 1.3.240
LeviMag/LeviMag UltraPure tools 1.3.242
IM10 Rotary Jet Mixer 1.3.246
IM15 Rotary Jet Mixer 1.3.248
IM20 Rotary Jet Mixer 1.3.256
IM25 Rotary Jet Mixer 1.3.264
Hybrid Powder Mixer HPM-M15 complete 1.3.270
Hybrid Powder Mixer MPM-M15 Butterfly valve 1.3.272
HPM-M15 In-line sight glass 1.3.274
Hybrid Powder Mixer HPM-S15 complete 1.3.276
Hybrid Powder Mixer common parts, Flush Container 1.3.278
Hybrid Powder Mixer common parts, C-ball valve 1.3.280
Hybrid Powder Mixer common parts, Inlet tube 1.3.282
Hybrid Powder Mixer common parts, High Shear and Pump Unit 1.3.284
Tri-blender F2116 and F2116 EZ system blenders 1.3.286
Tri-blender F3218 . . . . . 1.3.290
Tri-blender F4329 . . . . . 1.3.294

Spare parts for obsolete products

Magnetic Mixer MM338 . . . . . 1.3.298
Magnetic Mixer MM338 upgrade possibilities 1.3.304
Magnetic Mixer MM434 . . . . . 1.3.308
Magnetic Mixer MM434 upgrade possibilities 1.3.314
IM20 Rotary Jet Mixer 1.3.318

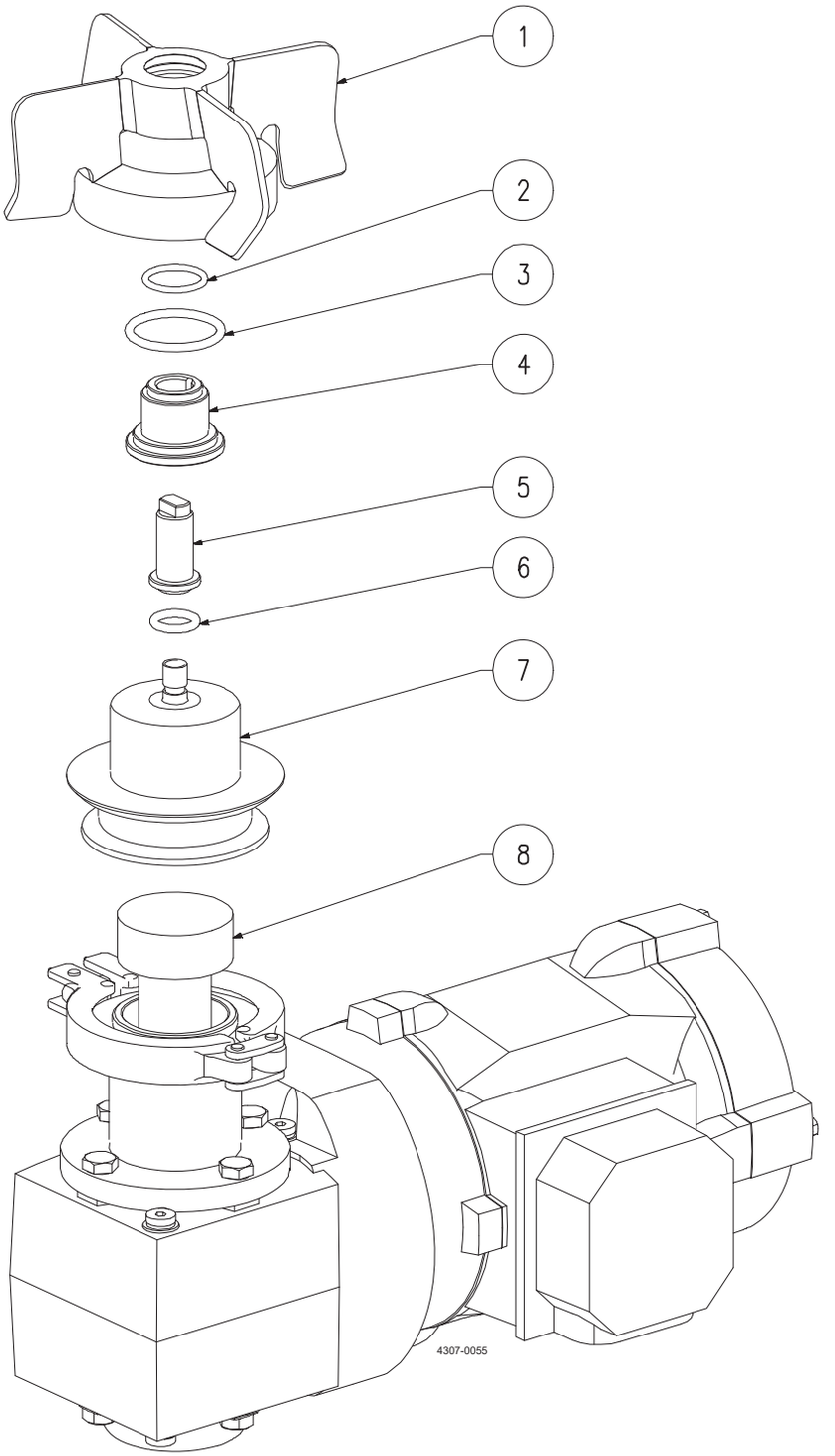
1
2
3
4
5
6
7
8
4307-0055

Pos		Qty	Denomination	Item
1		1	Impeller	
2	□△	1	O-ring	
3	□△	1	O-ring	
4	□	1	Female Bearing	
5	◆	1	Male Bearing	
6	◆△	1	O-ring	
7		1	Weld Plate	9615454401
8		1	Drive Unit	

		Item
Service kits		
□	**Service kit Female bearing - incl. Female bearing tool, see**	**9615463201**
□	**Service kit Female bearing, UltraPure (Q-doc) - incl. Female bearing tool, see**	**9615470301**
◆	**Service kit Male bearing - incl. Male bearing tool, see**	**9615463101**
◆	**Service kit Male bearing, UltraPure (Q-doc) - incl. Male bearing tool, see**	**9615470201**
△	**Service kit O-rings**	**8010005956**
△	**Service kit O-rings, UltraPure (Q-doc)**	**8010005957**

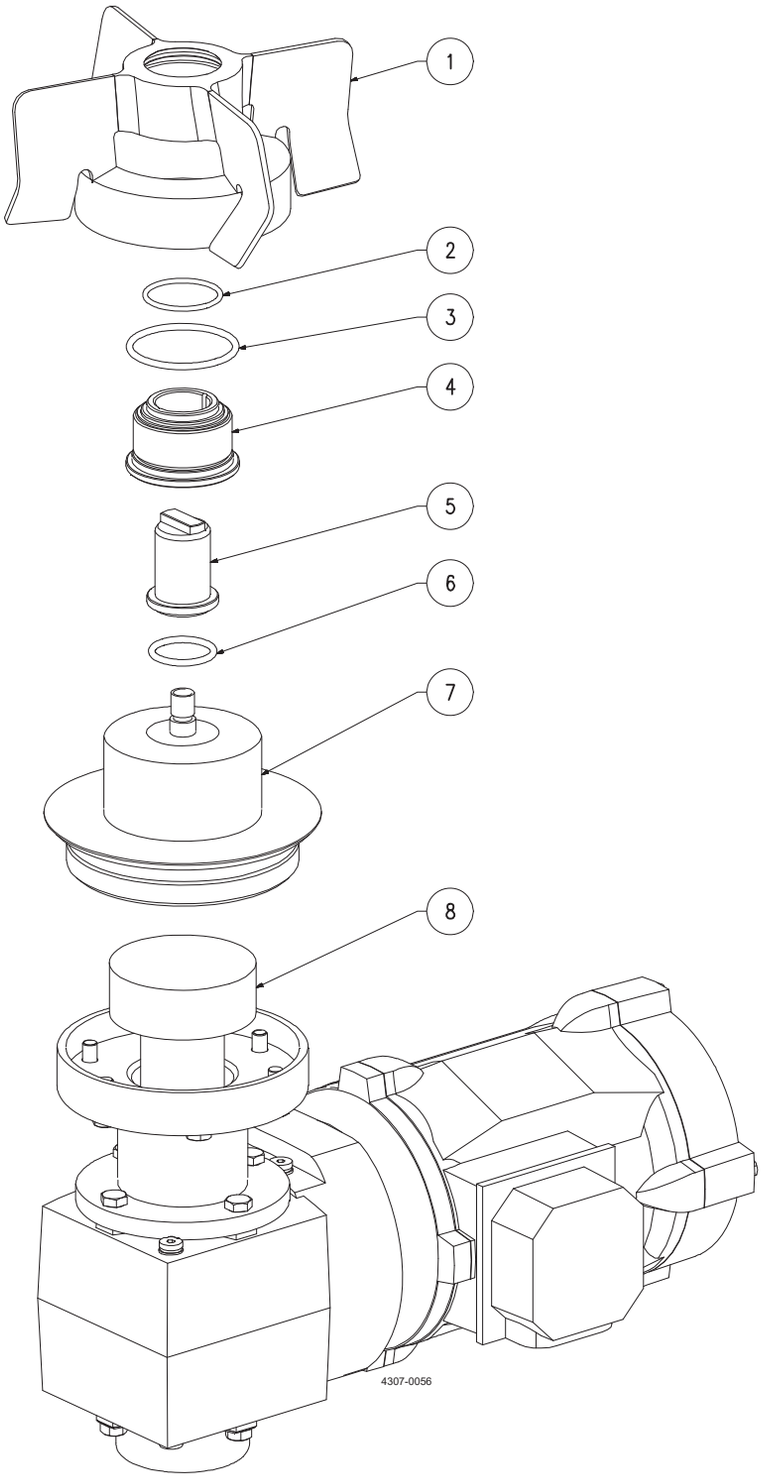
1
2
3
4
5
6
7
8
4307-0056

Pos		Qty	Denomination	Item
1		1	Impeller	
2	□△	1	O-ring	
3	□△	1	O-ring	
4	□	1	Female Bearing	
5	◆	1	Male Bearing	
6	◆△	1	O-ring	
7		1	Weld Plate	9615433701
8		1	Drive Unit	

		Item
Service kits		
□	**Service kit Female bearing - incl. Female bearing tool, see**	**9615463001**
□	**Service kit Female bearing, UltraPure (Q-doc) - incl. Female bearing tool, see**	**9615470501**
◆	**Service kit Male bearing - incl. Male bearing tool, see**	**9615462901**
◆	**Service kit Male bearing, UltraPure (Q-doc) - incl. Male bearing tool, see**	**9615470401**
△	**Service kit O-rings**	**8010005958**
△	**Service kit O-rings, UltraPure (Q-doc)**	**8010005959**

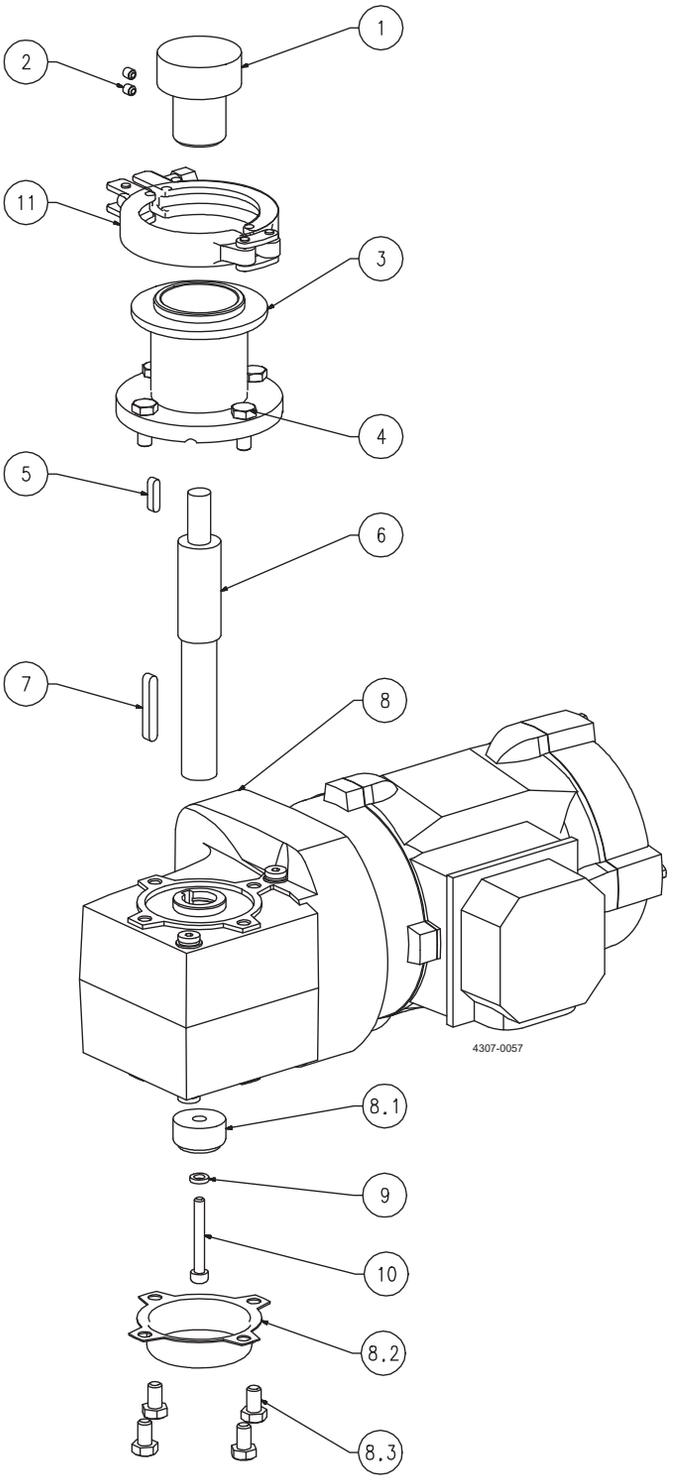
1
2
11
3
4
5
6
7
8
4307-0057
8.1
9
10
8.2
8.3

Pos		Qty	Denomination	Item
1		1	Drive Rotor	9615454701
2		2	Screw	9615457001
3	□	1	Flange, length 70 mm, [1)]	
	■	1	Flange, length 120 mm, [1)]	
4		4	Screw	TE2601000389
5		1	Parallel Key	9615456601
6	□	1	Shaft, length 173 mm	9615454601
	■	1	Shaft, length 223 mm	9615454602
7		1	Parallel Key	9615457401
8		1	Gear motor, - Blue, α = 0°-22°	9615456701
		1	Gear motor, - Blue, α = 23°-45°	9615456703
		1	Gear motor, - Clean room, α = 0°-22°	9615456702
		1	Gear motor, - Clean room, α = 23°-45°	9615456704
8.1		1	Fastening Element*	
8.2		1	Cover*	
8.3		4	Screw*	
9		1	Washer	9615462801
10		1	Screw	TE2601000184
11		1	Clamp	9634086467

NOTE

Length "□ " and "■" must match each other

* parts are included in the gear motor

[1)] These are request items that can only be sold on special Item number. We request serial number and item number of the machine they are to be replaced on.

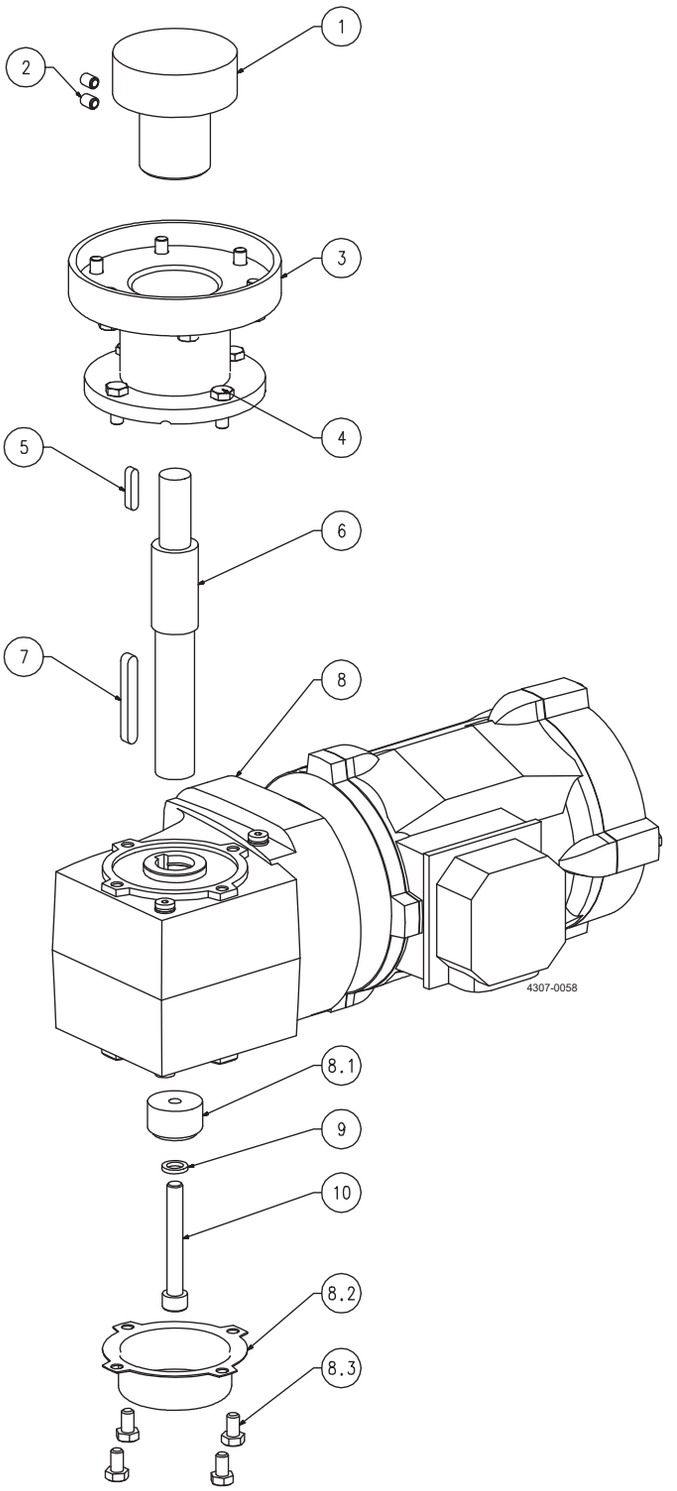
1
2
3
4
5
6
7
8
4307-0058
8.1
9
10
8.2
8.3

Pos		Qty	Denomination	Item
1		1	Drive Rotor	9615434001
2		2	Screw	9615434401
3	□	1	Flange, length 90 mm, [1]	
	■	1	Flange, length 140 mm, [1]	
4		10	Screw	TE2601000389
5		1	Parallel Key	9615434701
6	□	1	Shaft, - length 205 mm	9615433901
	■	1	Shaft, - length 255 mm	9615433902
7		1	Parallel Key	9615456801
8		1	Gear motor, - Blue, α = 0°-22°	9615435101
		1	Gear motor, - Blue, α = 23°-45°	9615435103
		1	Gear motor, - Clean room, α = 0°-22°	9615435102
		1	Gear motor, - Clean room, α = 23°-45°	9615435104
8.1		1	Fastening Element*	
8.2		1	Cover*	
8.3		4	Screw*	
9		1	Washer	TE2601000166
10		1	Screw	9615362001

NOTE

Length "□ " and "■" must match each other

* parts are included in the gear motor

[1] These are request items that can only be sold on special Item number. We request serial number and item number of the machine they are to be replaced on.

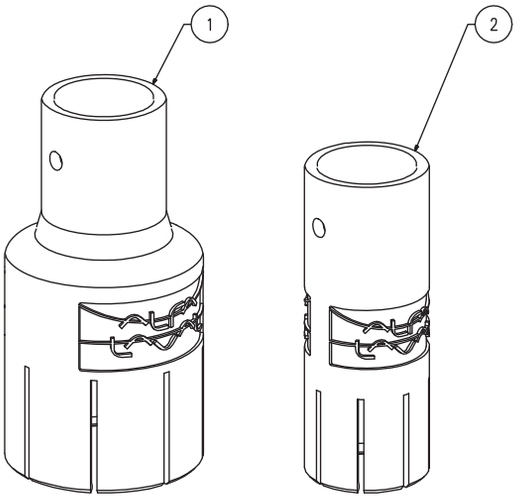
1
2

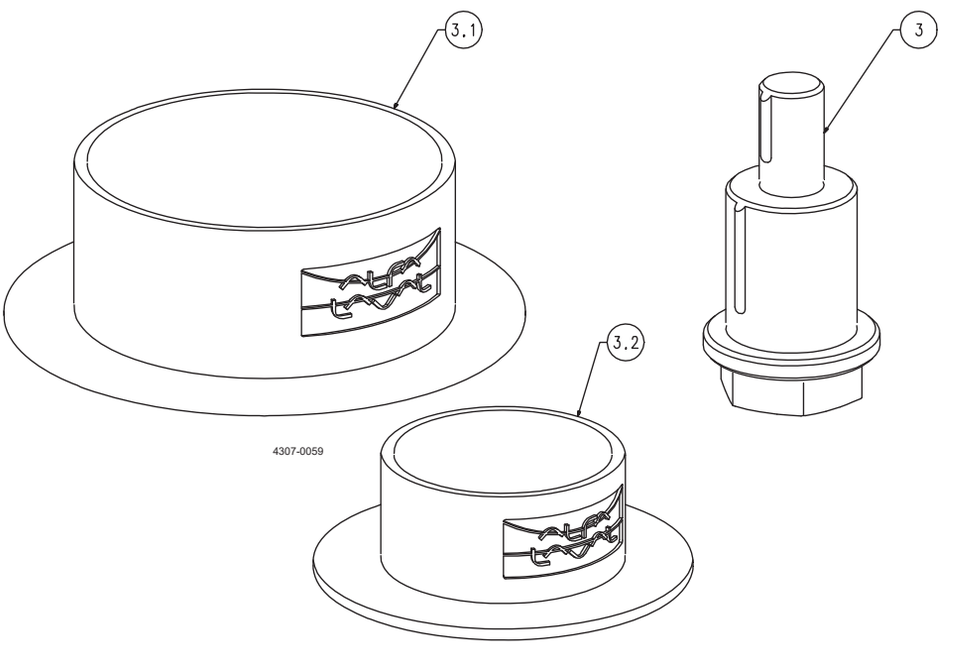
3.1
3
3.2
4307-0059

Pos	Qty	Denomination	Item
Male Bearing tool			
1	1	Male Bearing Tool - WP81*	9615471901
2	1	Male Bearing Tool - WP50*	9615472301

Pos	Qty	Denomination	Item
Female Bearing tool kit - WP81			
		Female Bearing Tool kit - WP81*	9615469801
		consisting of:	
3	1	Female Bearing tool	
3.1	1	Protection Shield Female Bearing - WP81	

Pos	Qty	Denomination	Item
Female Bearing tool kit - WP50			
		Female Bearing tool kit - WP50*	9615469701
		consisting of:	
3	1	Female Bearing tool	
3.2	1	Protection Shield Female Bearing - WP50	

* Tools are included when ordering bearing Service kits.

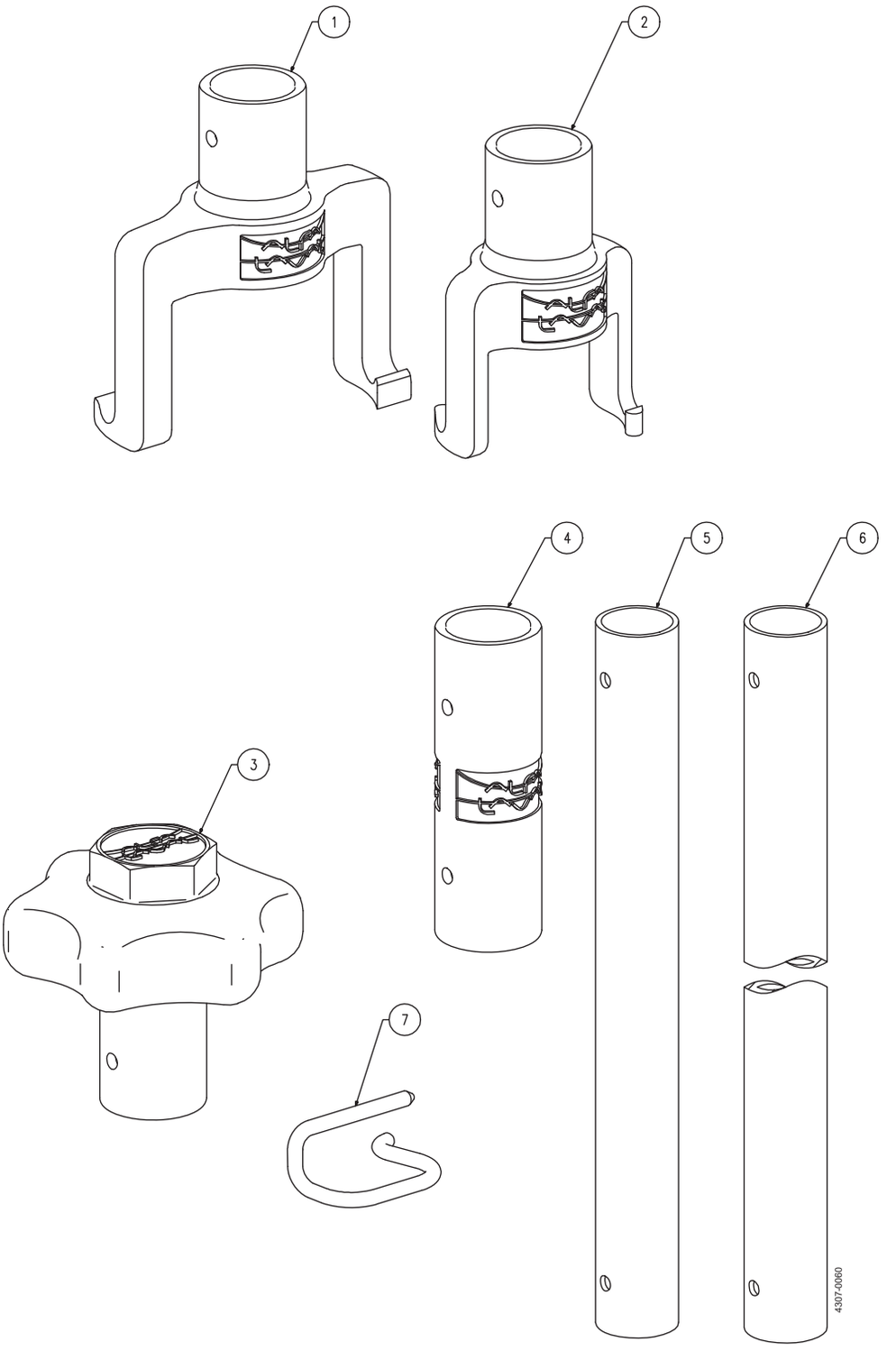
1
2
4
5
6
3
7
4307-0060

Pos	Qty	Denomination	Item
Impeller Lifting Devices			
1	1	Impeller Lifting Device WP81	9615472101
2	1	Impeller Lifting Device WP50	9615472501

Pos	Qty	Denomination	Item
Lifting Rod Handle kit			
		Lifting Rod Handle kit	9615469901
		consisting of:	
3	1	Lifting Rod Handle	
5	1	Lifting Rod 200 mm	
7	2	Clip	

Pos	Qty	Denomination	Item
Lifting Rod kit, 700 mm			
		Lifting Rod kit, 700 mm	9615470101
		consisting of:	
6	1	Lifting Rod 700 mm	
4	1	Lifting Rod Connection Piece	
7	2	Clip	

Pos	Qty	Denomination	Item
Lifting Rod kit, 200 mm			
		Lifting Rod kit, 200 mm	9615470001
		consisting of:	
5	1	Lifting Rod 200 mm	
4	1	Lifting Rod Connection Piece	
7	2	Clip	

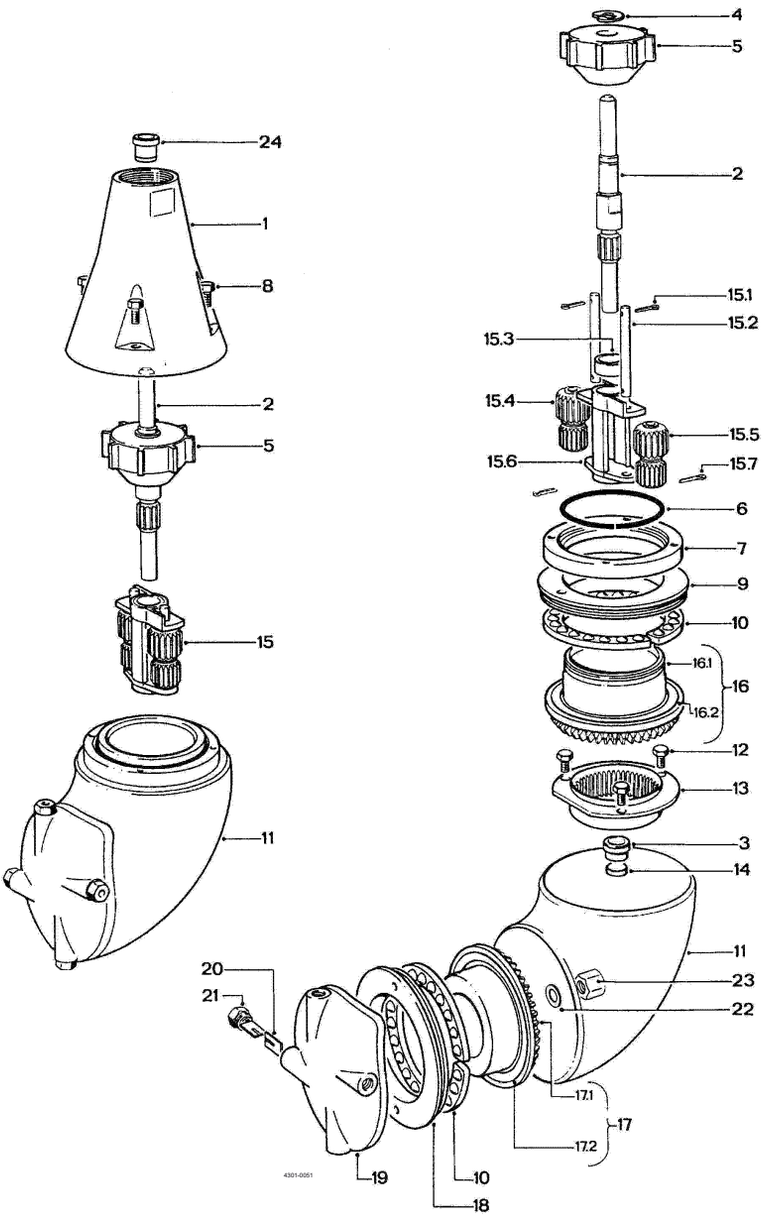
4
5
24
2
1
15.1
8
15.2
15.3
2
15.4
15.5
5
15.6
15.7
6
7
15
9
10
16.1
16
16.2
12
13
11
3
14
11
20
23
21
22
17.1
17
17.2
19
10
18

Pos		Qty	Denomination	Article no.	Material	Remarks
1		1	Cone 1" BSP	TE20G508	Stainless steel	Spare part
2		1	Turbine shaft	TE30B511	Stainless steel	Spare part
3	◆	1	Bearing for turbine shaft (body)	TE20G640	Polymer	Wear part
4		1	Circlip RS 10, DIN 6799	TE51C201	Stainless steel	Spare part
5	☐	1	Impeller, (ø3.5/3.9 mm nozzle)	TE20G553	Polymer	Spare part
	☐	1	Impeller, (ø4.5/4.6 mm nozzle)	TE20G554	Polymer	Spare part
	☐	1	Impeller, (ø5,5 mm nozzle)	TE20G555	Polymer	Spare part
6		1	Retainer spring	TE20G565	Stainless steel	Spare part
7		1	Retaining ring	TE20G563	Stainless steel	Spare part
8		4	Screw	TE51A172	Stainless steel	Spare part
9	◆	1	Stem nut with ball race	TE20G571	Stainless steel	Wear part
10	◆	2	Ball retainer with balls	TE30B302	PFA/Stainless steel	Wear part
11		1	Body		Stainless steel	*Note
12		3	Screw	TE51A170	Stainless steel	Spare part
13		1	Internal gear	TE20G525	Stainless steel	Spare part
14	◆	1	Slide bearing	TE20G641	Polymer	Wear part
15		1	Planet complete	TE30B307	Assembly	Spare part
15.1	◆	2	Cotter pin	TE51C102	Stainless steel	Spare part
15.2		2	Shaft for Planet wheel	TE30B514	Stainless steel	Spare part
15.3	◆	1	Bearing for Planet wheel carrier	TE20G642	Polymer	Wear part
15.4	◆	1	Planet wheel I	TE20G643	Polymer	Wear part
15.5	◆	1	Planet wheel II	TE20G644	Polymer	Wear part
15.6		1	Planet gear carrier	TE20G530	Stainless steel	Spare part
15.7		2	Cotter pin (=15.1)	TE51C102	Stainless steel	Spare part
16		1	Stem complete	TE20G319	Stainless steel	Spare part
16.1		1	Stem	TE20G624	Stainless steel	Spare part
16.2	◆	1	Ball race	TE20G574	Stainless steel	Wear part
17		1	Hub complete	TE20G320	Stainless steel	Spare part
17.1		1	Hub	TE20G625	Stainless steel	Spare part
17.2		1	Ball race (= pos. 16.2)	TE20G574	Stainless steel	Wear part
18	◆	1	Hub nut with ball race	TE20G573	Stainless steel	Wear part
19	☐	1	Hub cover with pin		Stainless steel	**Note
	☐	1	Hub cover with vanes and logo	TE20G620	Stainless steel	Spare part
20		8	Nozzle vane	TE20G594	Stainless steel	Spare part
21	☐	4	Nozzle, ø3.9 mm	TE20G608	Stainless steel	Spare part
	☐	4	Nozzle, ø4.6 mm	TE20G609	Stainless steel	Spare part
	☐	4	Nozzle, ø5.5 mm	TE20G605	Stainless steel	Spare part
22	◆	1	Washer, USIT	TE20G584	Stainless steel/elastomer	Spare part
23		1	Cap nut	TE51A521	Stainless steel	Spare part
24	◆	1	Bearing for turbine shaft (cone)	TE20G548	Polymer	Wear part

**Note pos. 19: For machine maintenance/repair, please order item no. TE20G390.

*Note: Pos. 11 is not sold as single Spare part component but only as part of a machine maintenance/repair order. For further information please contact Alfa Laval Customer Support.

☐ Configuration according to delivery note/order.

Service kit

◆	**Service kit for Alfa Laval IM 10**	**TE30B292**	

Parts marked with ◆ are included in the Service Kit for Alfa Laval IM 10: TE30B292

Pos	Qty	Denomination	Item no.
		Tools	
		Standard Tool Kit for Alfa Laval IM 10 Rotary Jet Mixer	TE81B085
		Consisting of:	
	-	5 mm caliper	TE369
	-	8 mm socket wrench with pin	TE462A
	-	Spanner, 36 mm	TE81B040
	-	Spanner, 12/13 mm	TE81B041
		Additional tool available on request	
		Fixture tool kit for body	TE20J386

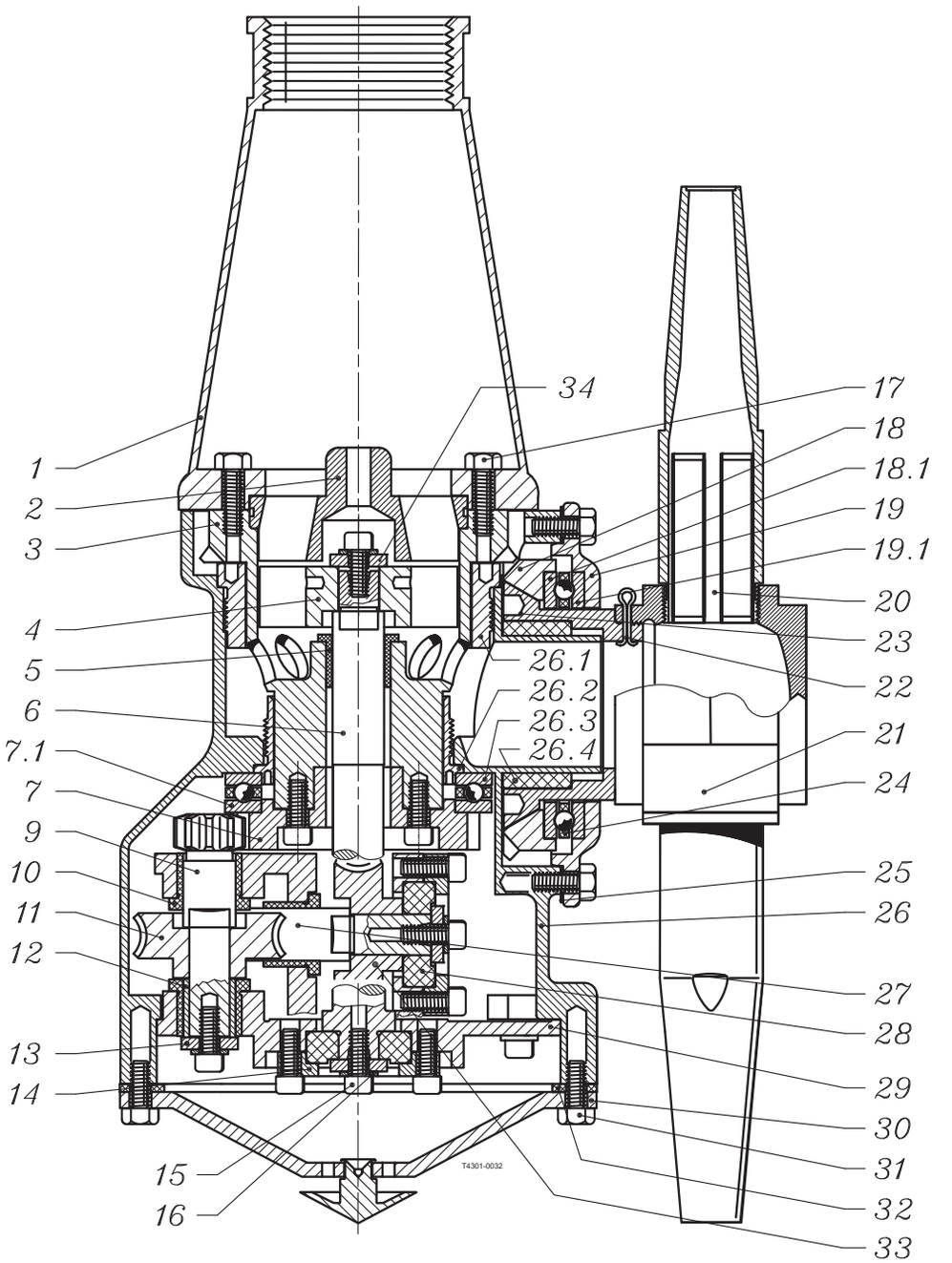
1
2
3
4
5
6
7.1
7
9
10
11
12
13
14
15
16
34
17
18
18.1
19
19.1
20
23
22
21
24
25
26
27
28
29
30
31
32
33
26.1
26.2
26.3
26.4
T4301-0032

Part List - Alfa Laval IM 15 Rotary Jet Mixer with 2 nozzles

Pos		Qty	Denomination	Item no.	Material	Material	Material	Remark
1	□	1	Top Cone, 1½" BSP	TE21D500	Stainless steel		Spare part	
	□	1	Top Cone, 1½" NPT	TE21D501	Stainless steel		Spare part	
2	□	1	Guide, 100%	TE703	Stainless steel		Spare part	
	□	1	Guide ring, 0%	TE803-0	Stainless steel		Spare part	
3		1	Stem	TE21B526	Stainless steel	Polymer	Spare part	
4		1	Impeller, 100%	TE31B512	Stainless steel		Spare part	
5	◆○	1	Main bush	TE21A526	Polymer		Wear part	
6	◆○	1	Turbine shaft	TE31B511	Stainless steel		Wear part	
7		1	Gear wheel w. ball race	TE31B304	Stainless steel		Spare part	
7.1	◆○	(1)	Ball race	TE31B510	Stainless steel		Wear part	
9		1	Pinion	TE814	Stainless steel		Spare part	
10	◆○	3	Collar bush	TE21A586	Polymer		Wear part	
11	◆○	1	Worm wheel, w. reinforcement	TE21A367	Polymer		Wear part	
12		1	Journal	TE817	Stainless steel		Spare part	
13		3	Washer	TE719A	Stainless steel		Spare part	
14		2	Bearing cover	TE731	Stainless steel		Spare part	
15		22	Screw	TE118	Stainless steel		Spare part	
16		8	Spring washer	TE156	Stainless steel		Spare part	
17		6	Screw	TE402H	Stainless steel		Spare part	
18		1	Bevel gear w. ball race	TE31B306	Stainless steel		Spare part	
18.1	◆○	(1)	Ball race	TE31B510	Stainless steel		Wear part	
19		1	Hub cover w. ball race	TE31B305	Stainless steel		Spare part	
19.1	◆○	(1)	Ball race	TE31B510	Stainless steel		Wear part	
20	□	2	Nozzle, ø8 mm	TE50B008	Stainless steel		Spare part	
	□	2	Nozzle, ø9 mm	TE50B009	Stainless steel		Spare part	
		2	Nozzle, ø10 mm	TE50B010	Stainless steel		Spare part	
	□	2	Nozzle, ø11 mm	TE50B011	Stainless steel		Spare part	
21		1	Hub	TE21B536	Stainless steel		Spare part	
22		1	Split pin for 2 nozzle	TE448	Stainless steel		Spare part	
23		1	Hub conical part	TE724215	Stainless steel		Spare part	
24	□◆	2	Ball retainer with balls	TE31B303	Polymer	Ceramics	Wear part	
	□○	2	Ball retainer with balls	TE21A380	Polymer	Stainless steel	Wear part	
25		1	Hub gasket	TE21D562	Polymer	Elastomer	Spare part	
26		1	Body, [1]		Stainless steel			
26.1		1	Main collar upper	TE21B520	Polymer		Wear part	
26.2		1	Main collar lower	TE21B521	Polymer		Wear part	
26.3	◆○	(1)	Ball race	TE31B510	Stainless steel		Wear part	
26.4		1	Hub collar	TE21D522	Polymer		Wear part	
27	◆○	1	Horizontal shaft	TE828Z	Stainless steel		Wear part	
28	◆○	2	Slide bearing	TE21A571	Polymer		Wear part	
29		1	Gear frame	TE730	Stainless steel		Spare part	
30		1	Bottom cover compl.	TE21D350	Stainless steel		Spare part	
31		10	Hex Screw	TE421H	Stainless steel		Spare part	
32		1	Bottom gasket	TE21D563	Elastomer	Polymer	Spare part	
33	◆○	1	Worm wheel w. reinforcement	TE21A367	Polymer		Wear part	
34		1	Washer	TE31B515	Stainless steel		Spare part	

	Item no.
Service kits	
◆ Standard service kit	TE31B299
○ Standard service kit for ATEX/IECEx machines	TE31B29970

[1] Pos. 26 is not sold as single spare part component. Only sold as part of a machine maintenance/repair order. For further information please contact Alfa Laval Customer Support.

Please note that some of the polymer parts are in PEEK. PEEK is not resistant to concentrated sulfuric acid.

□ Configuration according to delivery note/order.

Parts marked with ◆ are included in the Standard Service Kit TE31B299

Parts marked with ○ are included in the Standard Service Kit TE31B29970 (ATEX/IECEx)

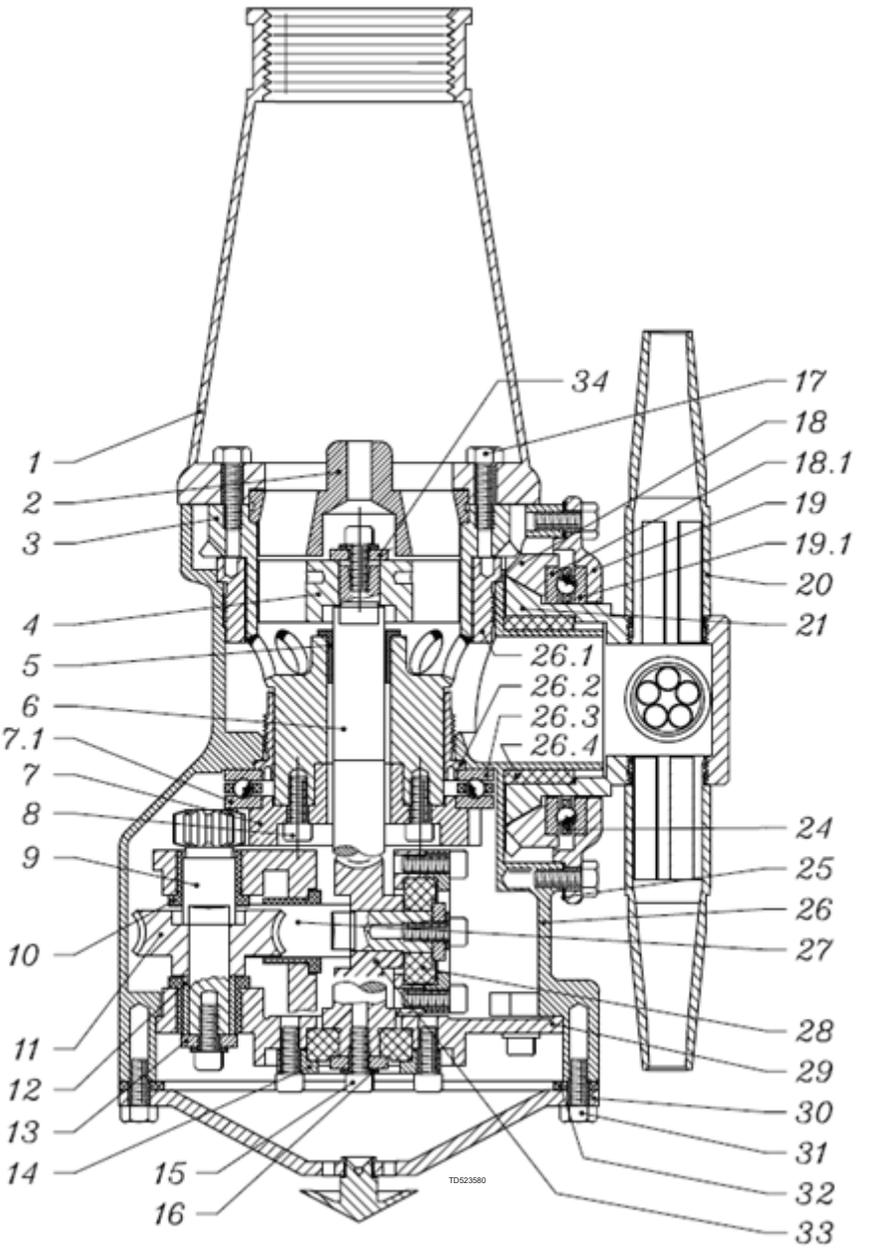
1
2
3
4
5
6
7.1
7
8
9
10
11
12
13
14
15
16
34
17
18
18.1
19
19.1
20
21
26.1
26.2
26.3
26.4
24
25
26
27
28
29
30
31
32
33
TD523580

Part List - Alfa Laval IM 15 Rotary Jet Mixer with 4 nozzles

Pos		Qty	Denomination	Item no.	Material	Material	Remark
1	□	1	Top Cone , 1½" BSP	TE21D500	Stainless steel		Spare part
	□	1	Top Cone , 1½" NPT	TE21D501	Stainless steel		Spare part
2	□	1	Guide , 100%	TE703	Stainless steel		Spare part
	□	1	Guide, 0%	TE803-0	Stainless steel		Spare part
3		1	Stem	TE21B526	Stainless steel		Spare part
4		1	Impeller, 100%	TE31B512	Stainless steel		Spare part
5	◆○	1	Main bush	TE21A526	Polymer		Wear part
6	◆○	1	Turbine shaft	TE31B511	Stainless steel		Wear part
7		1	Gear wheel w. ball race	TE31B304	Stainless steel		Spare part
7.1	◆○	1	Ball race	TE31B510	Stainless steel		Wear part
9		1	Pinion	TE814	Stainless steel		Spare part
10	◆○	3	Collar bush	TE21A586	Polymer		Wear part
11	◆○	1	Worm wheel, w. reinforcement	TE21A367	Polymer		Wear part
12		1	Journal	TE817	Stainless steel		Spare part
13		3	Washer	TE719A	Stainless steel		Spare part
14		2	Bearing cover	TE731	Stainless steel		Spare part
15		22	Screw	TE118	Stainless steel		Spare part
16		8	Spring washer	TE156	Stainless steel		Spare part
17		6	Screw	TE402H	Stainless steel		Spare part
18		1	Bevel gear w. ball race	TE31B306	Stainless steel		Spare part
18.1	◆○	1	Ball race	TE31B510	Stainless steel		Wear part
19		1	Hub cover w. ball race	TE31B305	Stainless steel		Spare part
19.1	◆○	1	Ball race	TE31B510	Stainless steel		Wear part
20	□	4	Nozzle , ø6 mm	TE50A006	Stainless steel		Spare part
	□	4	Nozzle, ø7 mm	TE50A007	Stainless steel		Spare part
	□	4	Nozzle, ø8 mm	TE50A008	Stainless steel		Spare part
21		1	Hub for 4 nozzle	TE21C536	Stainless steel		Spare part
24	□◆	2	Ball retainer with balls	TE31B303	Polymer	Ceramics	Wear part
	□○	2	Ball retainer with balls	TE21A380	Polymer	Stainless steel	Wear part
25		1	Hub gasket	TE21D562	Polymer	Elastomer	Spare part
26		1	Body, [1]		Stainless steel		
26.1		1	Main collar upper	TE21B520	Polymer		Wear part
26.2		1	Main collar lower	TE21B521	Polymer		Wear part
26.3	◆○	1	Ball race	TE31B510	Stainless steel		Wear part
26.4		1	Hub collar	TE21D522	Polymer		Wear part
27	◆○	1	Horizontal shaft	TE828Z	Stainless steel		Wear part
28	◆○	2	Slide bearing	TE21A571	Polymer		Wear part
29		1	Gear frame	TE730	Stainless steel		Spare part
30		1	Bottom cover compl.	TE21D350	Stainless steel		Spare part
31		10	Hex Screw	TE421H	Stainless steel		Spare part
32		1	Bottom gasket	TE21D563	Elastomer	Polymer	Spare part
33	◆○	1	Worm wheel w. reinforcement	TE21A367	Polymer		Wear part
34		1	Washer	TE31B515	Stainless steel		Spare part

Service kits

	Item no.
Standard Service Kit	TE31B299
Standard service kit for ATEX/IECEx machines	TE31B29970

[1] Pos. 26 is not sold as single spare part component. Only sold as part of a machine maintenance/repair order. For further information please contact Alfa Laval Customer Support.

Please note that some of the polymer parts are in PEEK. PEEK is not resistant to concentrated sulfuric acid.

□ Configuration according to delivery note/order.

Parts marked with ◆ are included in the Standard Service Kit TE31B299

Parts marked with ○ are included in the Standard Service Kit TE31B29970 (ATEX/IECEx)

Service intervals

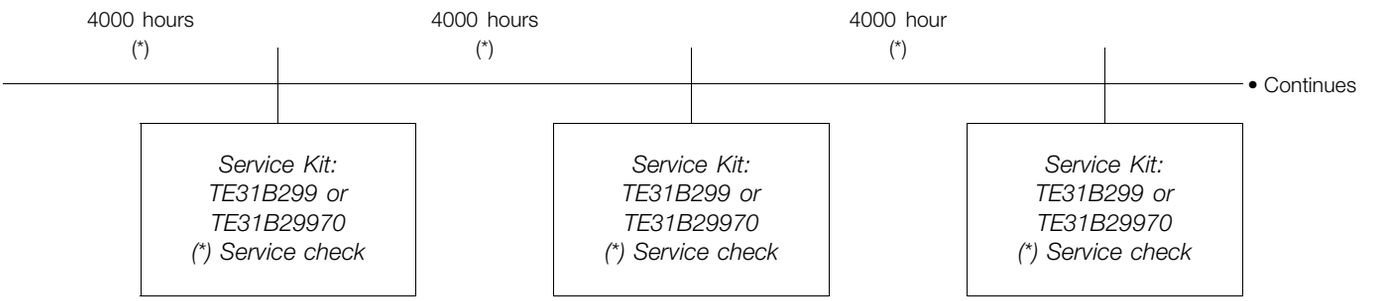

NOTE
The service intervals are recommended on the basis of pure liquids. When liquids contain particles and other kind of abrasives, we recommend shorter service intervals depending on the actual running conditions.

Pos	Qty	Denomination	Item no.
Service kits			
		Service kit for IM 15	TE31B299
Consisting of:			
-	2	Worm wheel w. steel core	TE21A367
-	1	Main bush	TE21A526
	2	Slide bearing	TE21A571
	3	Collar Bush	TE21A586
	2	Ball Retainer with Balls	TE31B303
	4	Ball Race	TE31B510
	1	Turbine Shaft	TE31B511
	1	Horizontal Shaft	TE828Z

Pos	Qty	Denomination	Item no.
		Service Kit for IM 15 ATEX/IECEx	TE31B29970
Consisting of:			
-	2	Worm wheel w. steel core	TE21A367
-	1	Main bush	TE21A526
	2	Slide bearing	TE21A571
	3	Collar Bush	TE21A586
	2	Ball retainer with balls	TE21a380
	4	Ball Race	TE31B510
	1	Turbine Shaft	TE31B511
	1	Horizontal Shaft	TE828Z

Tools for replacement of Collars bush

TE81B033: Pusher for 1½" Collar bush

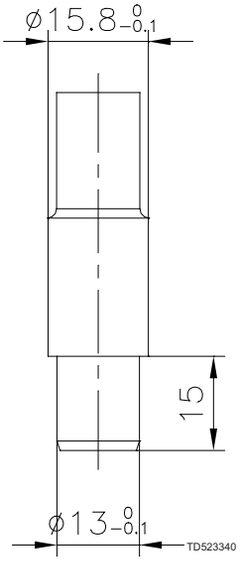

Sketch of tools for replacement of Main collars

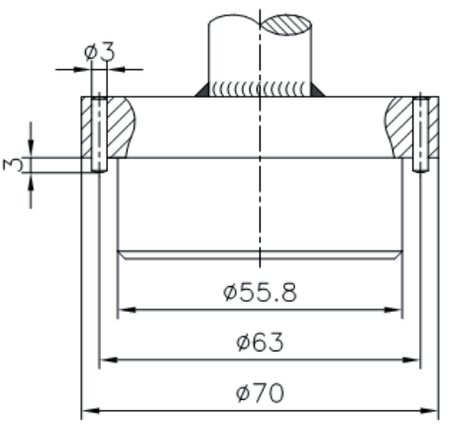

TE81B129: Tool for upper collar

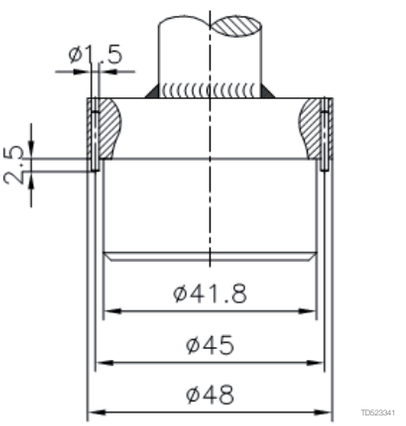

TE81B130: Tool for lower collar

Pos	Qty	Denomination	Item no.
Standard tool kit			
		Standard tool kit	TE81B055
Consisting of:			
	1	Hex key	TE134
	2	Hex screwdriver	TE134A
	1	Socket wrench w. pin	TE462A

Available on request:

Pos	Qty	Denomination	Item no
	1	Pusher f. 1½" machines	TE81B033
	1	Tool f. upper collar (1½" TCM) compl.	TE81B129
-		Tool f. lower collar (1½" TCM) compl.	TE81B130

Machine with 2 nozzles

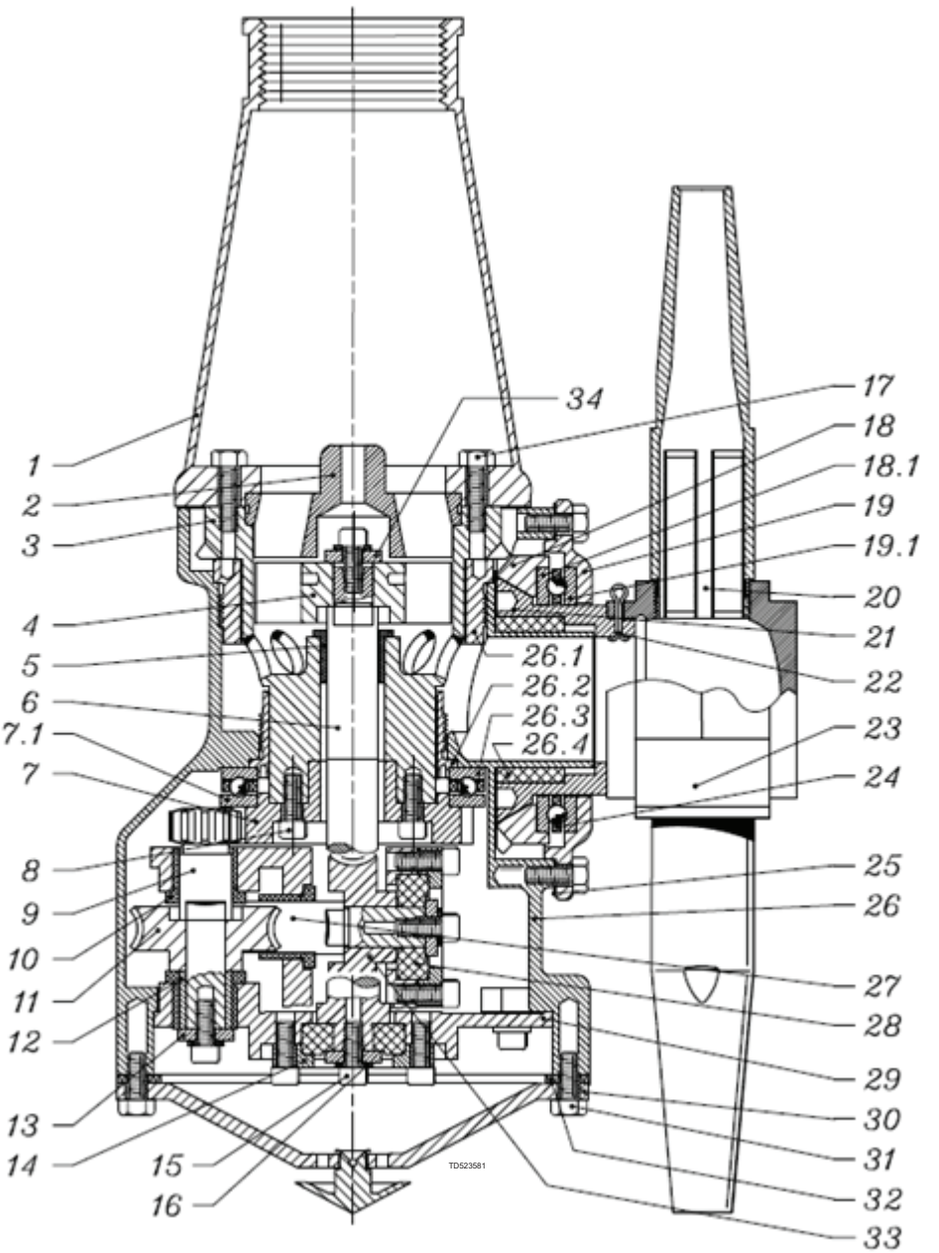

Pos		Qty	Denomination	Item no.	Material	Material	Remark
Machine with 2 nozzles							
1	□	1	Top cone, 2" BSP	TE22D500	Stainless steel		Spare part
	□	1	Top cone, 2" NPT	TE22D501	Stainless steel		Spare part
2		1	Guide ring, 0%	TE1030	Stainless steel		Spare part
3		1	Stem	TE32B526	Stainless steel		Spare part
4		1	Impeller, 100%	TE32B508	Stainless steel		Spare part
5	◆○	1	Main bush	TE32B576	Polymer		Wear part
6	◆○	1	Turbine shaft	TE32B511	Stainless steel		Wear part
7		1	Gear wheel w. ball race	TE32B303	Stainless steel		Spare part
7.1	◆○	1	Ball race	TE32B510	Stainless steel		Wear part
8		6	Screw	TE120	Stainless steel		Spare part
9		1	Pinion	TE114	Stainless steel		Spare part
10	◆○	3	Collar bush	TE22A586	Polymer		Wear part
11	◆○	1	Worm wheel	TE22A365	Polymer		Wear part
12		1	Journal	TE117	Stainless steel		Spare part
13		9	Spring washer	TE156	Stainless steel		Spare part
14		2	Bearing cover	TE531	Stainless steel		Spare part
15		17	Screw	TE118	Stainless steel		Spare part
16		3	Washer	TE619A	Stainless steel		Spare part
17		8	Screw	TE902H	Stainless steel		Spare part
18		1	Bevel gear with ball race	TE32B307	Stainless steel		Spare part
18.1	◆○	1	Ball race	TE32B510	Stainless steel		Wear part
19		1	Hub cover with ball race	TE32B306	Stainless steel		Spare part
19.1	◆○	1	Ball race	TE32B510	Stainless steel		Wear part
20	□	2	Nozzle, ø12	TE50C012	Stainless steel		Spare part
	□	2	Nozzle, ø13	TE50C013	Stainless steel		Spare part
	□	2	Nozzle, ø14	TE50C014	Stainless steel		Spare part
	□	2	Nozzle, ø15	TE50C015	Stainless steel		Spare part
21		1	Hub conical part	TE32B534	Stainless steel		Spare part
22		1	Cotter pin	TE448	Stainless steel		Wear part
23		1	Hub nozzle part for 2 nozzle	TE624215	Stainless steel		Wear part
24	□◆	2	Ball retainer with balls	TE32B302	Polymer	Ceramics	Wear part
	□○	2	Ball retainer with balls	TE126S	Polymer	Stainless steel	Wear part
25		1	Hub gasket	TE22D553	Polymer	Elastomer	Spare part
26		1	Body[1)]		Stainless steel		N/A
26.1		1	Main collar upper	TE32B577	Polymer		Wear part
26.2		1	Main collar lower	TE32B578	Polymer		Wear part
26.3	◆○	1	Ball race	TE32B510	Stainless steel		Wear part
26.4		1	Hub collar	TE32B575	Polymer		Wear part
27	◆○	1	Horizontal shaft	TE128Z	Stainless steel		Wear part
28	◆○	2	Slide bearing	TE22A571	Polymer		Wear part
29		1	Gear frame	TE630	Stainless steel		Spare part
30		1	Bottom cover, compl.	TE32B350	Stainless steel		Spare part
31		12	Screw	TE421H	Stainless steel		Spare part
32		1	Bottom gasket	TE22D554	Polymer	Elastomer	Spare part
33	◆○	1	Worm wheel	TE22A365	Polymer		Wear part
34		1	Washer	TE32B515	Stainless steel		Spare part

Service kits

◆	Service Kit - machines delivered after December 27, 2010. From serial no. 1012-002	TE32B299
○	Standard service kit for ATEX/IECEx machines	TE32B29970

[1)] Pos. 26 is not sold as single spare part component. Only sold as part of a machine maintenance/repair order. For further information please contact Alfa Laval Customer Support.

Please note that some of the polymer parts are in PEEK. PEEK is not resistant to concentrated sulfuric acid.

□ Configuration according to delivery note/order.

Parts marked with ◆ are included in the Standard Service Kit TE32B299

Parts marked with ○ are included in the Standard Service Kit TE32B29970 (ATEX/IECEx)

Machine with 4 nozzles

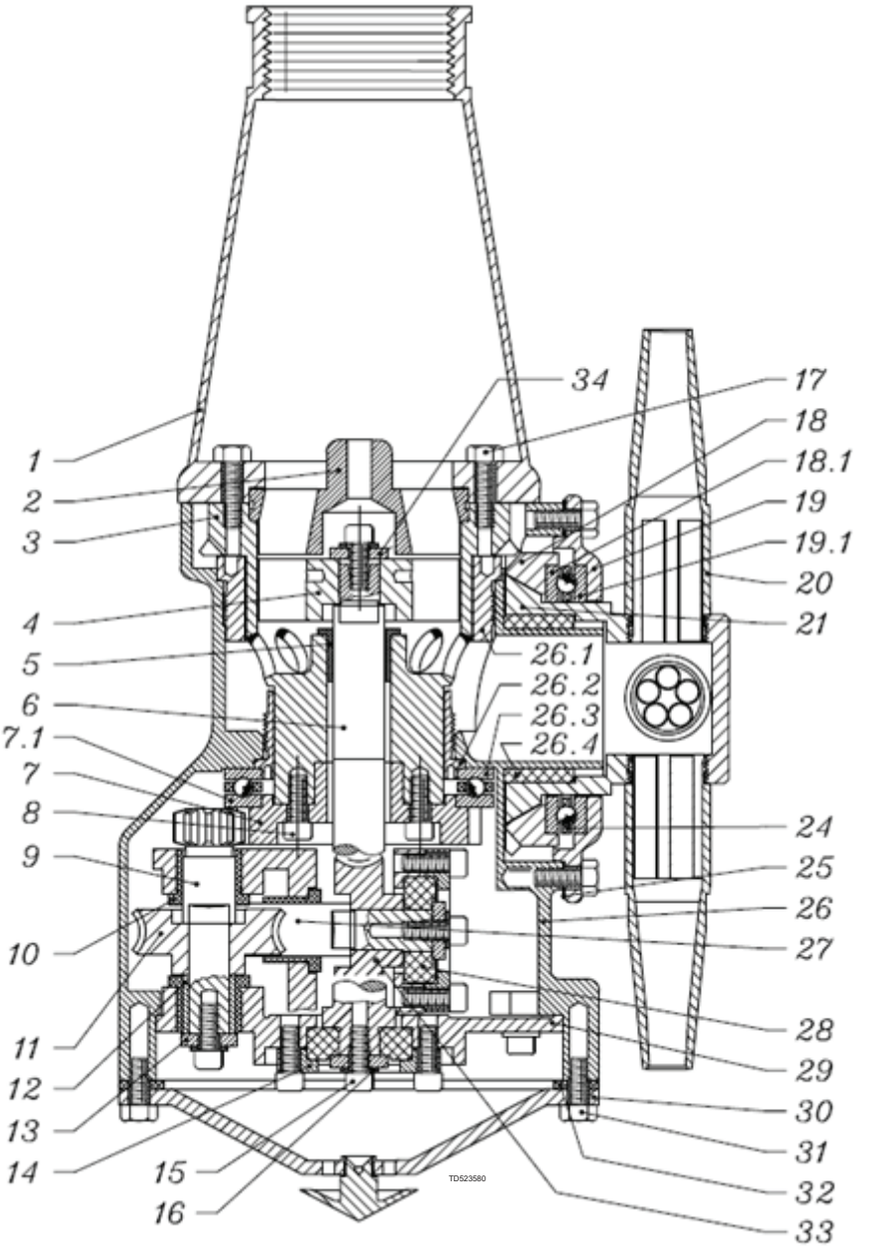

Pos		Qty	Denomination	Item no.	Material	Material	Remark
Machine with 4 nozzles							
1	□	1	Top cone, 2" BSP	TE22D500	Stainless steel		Spare part
	□	1	Top cone, 2" NPT	TE22D501	Stainless steel		Spare part
2	□	1	Guide, 100%	TE603	Stainless steel		Spare part
	□	1	Guide ring, 0%	TE1030	Stainless steel		Spare part
3		1	Stem	TE32B526	Stainless steel		Spare part
4		1	Impeller, 100%	TE32B508	Stainless steel		Spare part
5	◆○	1	Main bush	TE32B576	Polymer		Wear part
6	◆○	1	Turbine shaft	TE32B511	Stainless steel		Wear part
7		1	Gear wheel w. ball race	TE32B303	Stainless steel		Spare part
7.1	◆○	1	Ball race	TE32B510	Stainless steel		Wear part
8		6	Screw	TE120	Stainless steel		Spare part
9		1	Pinion	TE114	Stainless steel		Spare part
10	◆○	3	Collar bush	TE22A586	Polymer		Wear part
11	◆○	1	Worm wheel, w. reinforcement	TE22A365	Polymer		Wear part
12		1	Journal	TE117	Stainless steel		Spare part
13		3	Washer	TE619A	Stainless steel		Spare part
14		2	Bearing cover	TE531	Stainless steel		Spare part
15		17	Screw	TE118	Stainless steel		Spare part
16		9	Spring washer	TE156	Stainless steel		Spare part
17		8	Screw	TE902H	Stainless steel		Spare part
18		1	Bevel gear with ball race	TE32B307	Stainless steel		Spare part
18.1	◆○	1	Ball race	TE32B510	Stainless steel		Wear part
19		1	Hub cover with ball race	TE32B306	Stainless steel		Spare part
19.1	◆○	1	Ball race	TE32B510	Stainless steel		Wear part
20	□	4	Nozzle, ø8	TE50B008	Stainless steel		Spare part
	□	4	Nozzle, ø9	TE50B009	Stainless steel		Spare part
	□	4	Nozzle, ø10	TE50B010	Stainless steel		Spare part
	□	4	Nozzle, ø11	TE50B011	Stainless steel		Spare part
21		1	Hub for 4 nozzle	TE32B536	Stainless steel		Spare part
24	□◆	2	Ball retainer with balls	TE32B302	Polymer	Ceramics	Wear part
	□○	2	Ball retainer with balls	TE126S	Polymer	Stainless steel	Wear part
25		1	Hub gasket	TE22D553	Polymer	Elastomer	Spare part
26		1	Body[1]		Stainless steel		N/A
26.1		1	Main collar upper	TE32B577	Polymer		Wear part
26.2		1	Main collar lower	TE32B578	Polymer		Wear part
26.3	◆○	1	Ball race	TE32B510	Stainless steel		Wear part
26.4		1	Hub collar	TE32B575	Polymer		Wear part
27	◆○	1	Horizontal shaft	TE128Z	Stainless steel		Wear part
28	◆○	2	Slide bearing	TE22A571	Polymer		Wear part
29		1	Gear frame	TE630	Stainless steel		Spare part
30		1	Bottom cover, compl.	TE32B350	Stainless steel		Spare part
31		12	Screw	TE421H	Stainless steel		Spare part
32		1	Bottom gasket	TE22D554	Polymer	Elastomer	Spare part
33	◆○	1	Worm wheel, w. reinforcement	TE22A365	Polymer	Stainless steel	Wear part
34		1	Washer	TE32B515	Stainless steel	Spare part	

Service kits

◆	Service Kit - machines delivered after December 27, 2010. From serial no. 1012-002	TE32B299
○	Standard service kit for ATEX/IECEx machines	TE32B29970

[1] Pos. 26 is not sold as single spare part component. Only sold as part of a machine maintenance/repair order. For further information please contact Alfa Laval Customer Support.

Please note that some of the polymer parts are in PEEK. PEEK is not resistant to concentrated sulfuric acid.

□ Configuration according to delivery note/order.

Parts marked with ◆ are included in the Standard Service Kit TE32B299

Parts marked with ○ are included in the Standard Service Kit TE32B29970 ATEX/IECEx

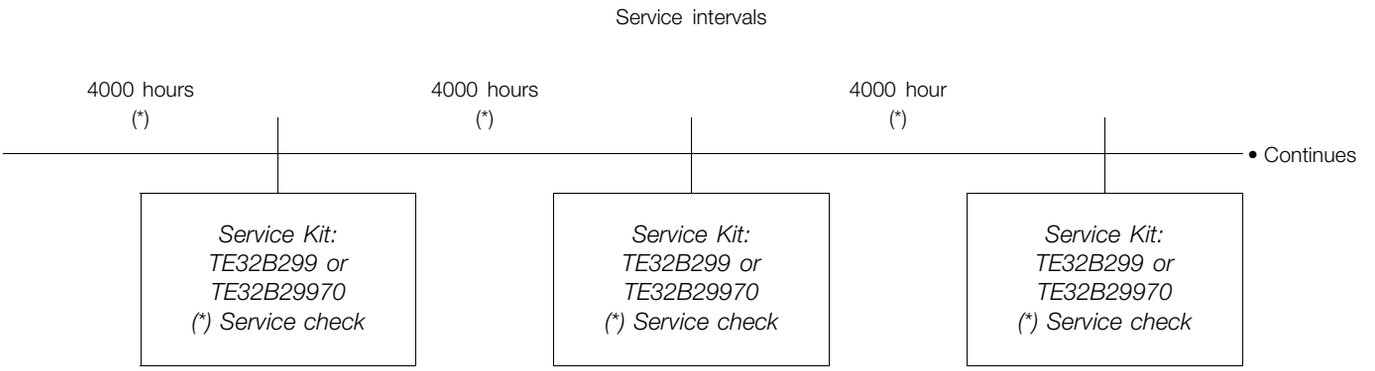

NOTE
The service intervals are recommended on the basis of pure liquids. When liquids contain particles and other kind of abrasives, we recommend shorter service intervals depending on the actual running conditions.

Pos	Qty	Denomination	Item no.
Service kits			
		Service kit for IM 20	TE32B299
Consisting of:			
	1	Horizontal Shaft	TE128Z
	2	Worm wheel reinforced	TE22A365
	2	Slide bearing	TE22A571
	3	Collar bush	TE22A586
	2	Ball Retainer with Balls	TE32B302
	4	Ball Race	TE32B510
	1	Turbine Shaft	TE32B511
	1	Main bush for IM	TE32B576

Pos	Qty	Denomination	Item no.
		Service Kit for IM 20 ATEX/IECEx	TE32B29970
Consisting of:			
	1	Horizontal Shaft	TE128Z
	2	Worm wheel reinforced	TE22A365
	2	Slide bearing	TE22A571
	3	Collar bush	TE22A586
	2	Ball Retainer with Balls	TE126S
	4	Ball Race	TE32B510
	1	Turbine Shaft	TE32B511
	1	Main bush for IM	TE32B576

Tools

TE81B031: Pusher for Gear frame

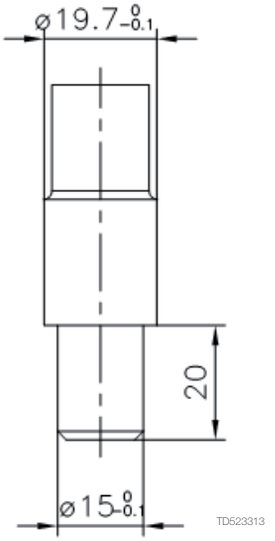

TE81B032: Fixture set f. Gear frame

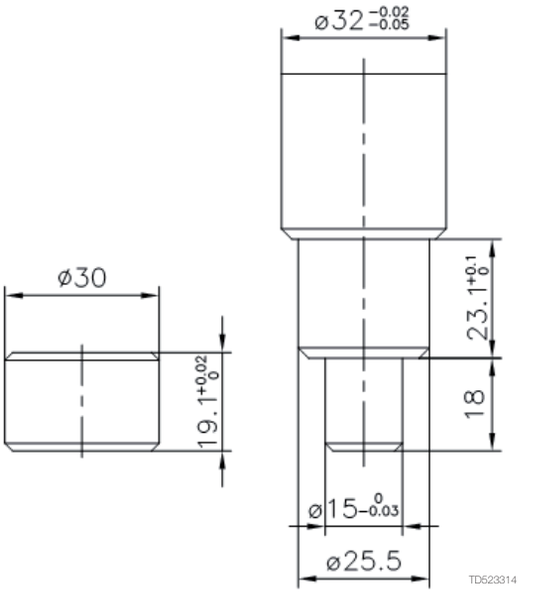

A: TE81B131 Tool for upper collar (2" TCM) compl. - B: TE81B132 Tool for lower collar (2"+ 3" TCM) compl.

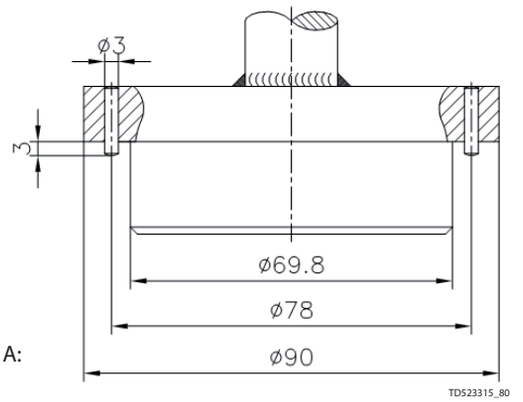

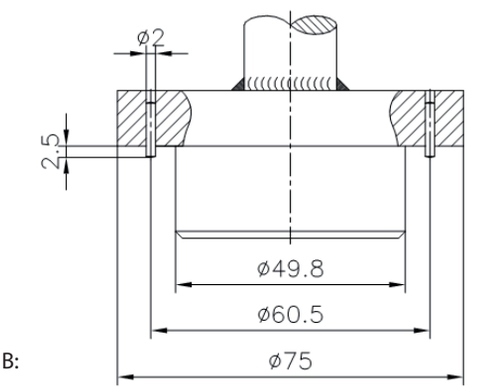

Pos	Qty	Denomination	Item no.
Tools			
		Standard tool kit	TE81B075
Consisting of:			
	1	Hex key	TE134
	1	Hex screwdriver	TE134A
	1	Hex key	TE135
	1	Hex screwdriver	TE135A
	1	Open-end spanner	TE462

Pos	Qty	Denomination	Item no.
Available on request:			
		Pusher for Gear frame	TE81B031
		Fixture set f. Gear frame	TE81B032
		Tool for Upper collar (2” TCM) compl.	TE81B131
		Tool for Lower collar (2” TCM) compl.	TE81B132

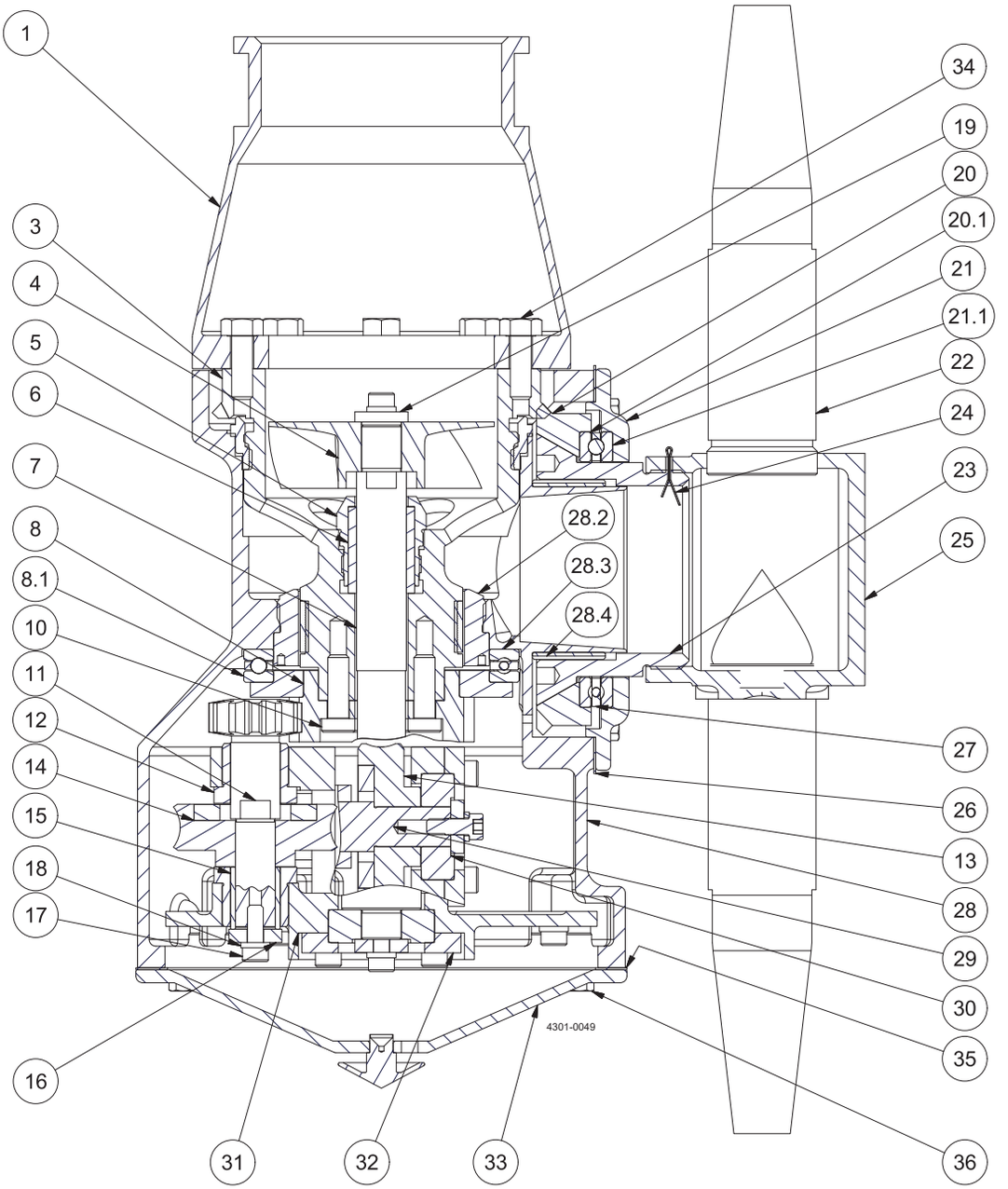
1
3
4
5
6
7
8
8.1
10
11
12
14
15
18
17
16
31
32
33
34
19
20
20.1
21
21.1
22
24
23
25
28.2
28.3
28.4
27
26
13
28
29
30
35
36
4301-0049

Pos		Qty	Denomination	Item no.	Material	Material	Remark
1		1	Top Cone, 2½" BSP	TE33B510	Stainless steel		Spare part
3		1	Stem with liners	TEB604Z	Polymer	Stainless steel	Spare part
4		1	Impeller, 100%	TE33B508	Stainless steel		Spare part
5		1	Gland	TE608Z	Stainless steel		Spare part
6	◆○	1	Main Bush	TE22B576	Polymer		Wear part
7		1	Turbine shaft	TE32B511	Stainless steel		Wear part
8		1	Gear wheel w. Ball race	TE32B303	Stainless steel		Spare part
8.1	◆○	1	Ball race	TE32B510	Stainless steel		Wear part
10		6	Screw	TE120	Stainless steel		Spare part
11		1	Pinion	TE114	Stainless steel		Spare part
12	◆○	3	Collar bush	TE22A586	Polymer		Wear part
13	◆○	1	Worm wheel w. reinforcem.	TE22A365	Polymer	Stainless steel	Wear part
14	◆○	1	Worm wheel comp. E-gear	TE22A364	Polymer	Stainless steel	Wear part
15		1	Journal	TE117	Stainless steel		Spare part
16		3	Washer	TE619A	Stainless steel		Spare part
17		17	Screw	TE118	Stainless steel		Spare part
18		9	Spring washer	TE156	Stainless steel		Spare part
19		1	Washer	TE32B515	Stainless steel		Spare part
20		1	Bevel gear w. Ball race	TE32B307	Stainless steel		Spare part
20.1	◆○	1	Ball race	TE32B510	Stainless steel		Wear part
21		1	Hub cover w. Ball race	TE32B306	Stainless steel		Spare part
21.1	◆○	1	Ball race	TE32B510	Stainless steel		Wear part
22	□	2	Nozzle, ø15	TE50C015	Stainless steel		Spare part
	□	2	Nozzle, ø16	TE50C016	Stainless steel		Spare part
	□	2	Nozzle, ø17	TE50C017	Stainless steel		Spare part
	□	2	Nozzle, ø18	TE50C018	Stainless steel		Spare part
	□	2	Nozzle, ø19	TE50C019	Stainless steel		Spare part
	□	2	Nozzle, ø20	TE50C020	Stainless steel		Spare part
	□	2	Nozzle, ø21	TE50C021	Stainless steel		Spare part
23		1	Hub conical part	TE32B534	Stainless steel		Spare part
24		1	Cotter pin	TE448	Stainless steel		Spare part
25		1	Hub nozzle part	TE624215	Stainless steel		Spare part
26		1	Hub gasket	TE22D553	Modified polymer	Elastomer	Spare part
27	□◆	2	Ball retainer w. balls	TE32B302	Polymer	Ceramics	Wear part
	□○	2	Ball retainer w. balls	TE126S	Polymer	Stainless steel	Wear part
28		1	Body, [1]		Stainless steel		
28.2		1	Main collar lower	TE22E516	Stainless steel		Wear part
28.3	◆○	1	Ball race	TE32B510	Stainless steel		Wear part
28.4		1	Hub collar	TE33B575	Polymer		Wear part
29		1	Horizontal shaft, E-gear	TE128E	Stainless steel		Wear part
30	◆○	2	Slide Bearing	TE22A571	Polymer		Wear part
31		1	Gear frame	TE630	Stainless steel		Spare part
32		2	Bearing cover	TE531	Stainless steel		Spare part
33		1	Bottom cover	TE32B350	Stainless steel		Spare part
34		8	Screw	TE902H	Stainless steel		Spare part
35		1	Bottom gasket	TE22D554	Modified polymer	Elastomer	Spare part
36		12	Screw	TE421H	Stainless steel		Spare part

Service kits

◆	**Spare part kit standard**	**TE33B299**
○	**Standard service kit for ATEX/IECEx machines**	**TE33B29970**

[1] Pos. 28 is not sold as single spare part component. Only sold as part of a machine maintenance/repair order. For further information please contact Alfa Laval Customer Support.

Please note that some of the polymer parts are in PEEK. PEEK is not resistant to concentrated sulfuric acid.

□ Configuration according to delivery note/order.

Parts marked with ◆ are included in the Standard Service Kit TE33B299

Parts marked with ○ are included in the Standard Service Kit TE33B29970 (ATEX/IECEx)

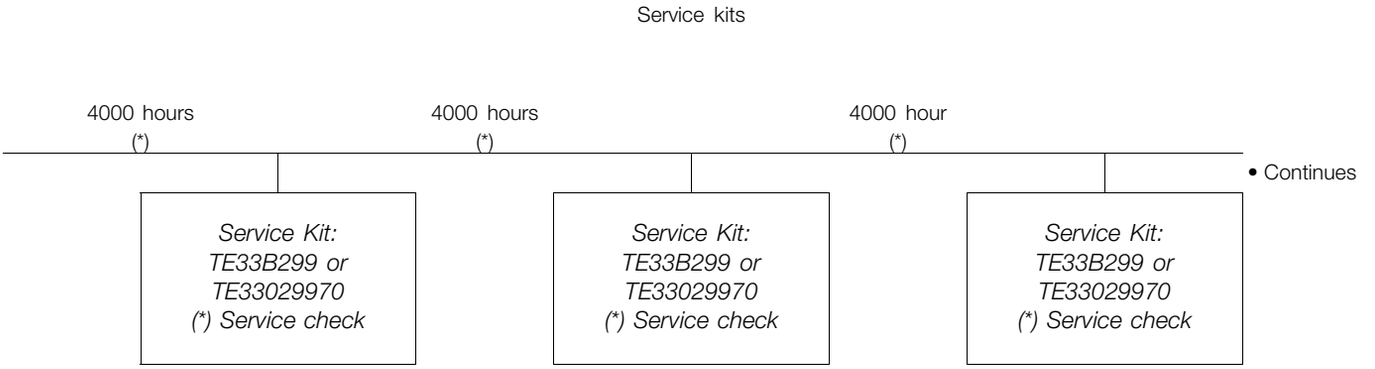

NOTE
The service intervals are recommended on the basis of pure liquids. When liquids contain particles and other kind of abrasives, we recommend shorter service intervals depending on the actual running conditions.

Pos	Qty	Denomination	Item no.
Service kits			
		Service kit for IM 25	TE33B299
Consisting of:			
	1	Worm wheel compl. E-gear	TE22A364
	1	Worm wheel reinforced	TE22A365
	2	Slide bearing	TE22A571
	3	Collar bush	TE22A586
	1	Main bush	TE22B576
	2	Ball Retainer with Balls	TE32B302
	4	Ball Race	TE32B510

Pos	Qty	Denomination	Item no.
		Service Kit for IM 25 ATEX/IECEx	TE33B29970
Consisting of:			
	1	Worm wheel compl. E-gear	TE22A364
	1	Worm wheel reinforced	TE22A365
	2	Slide bearing	TE22A571
	3	Collar bush	TE22A586
	1	Main bush	TE22B576
	2	Ball Retainer with Balls	TE126S
	4	Ball Race	TE32B510

Tools

Sketch of tools for replacement of Collar Bush

TE81B031 Pusher for 2” gear frame

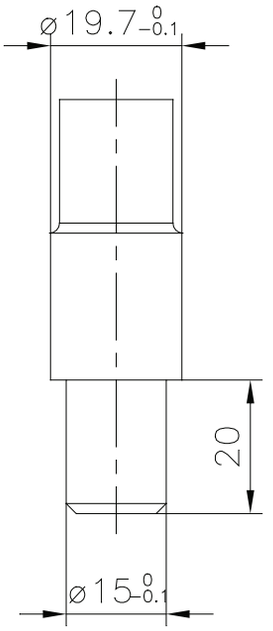

TE81B032 Fixture set for gear frame

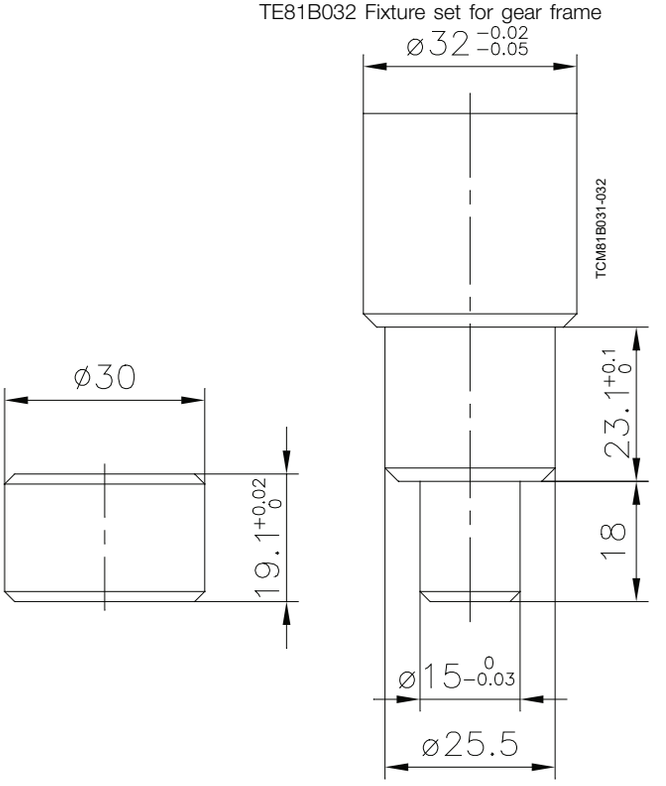

Sketch of tools for replacement of Main Collars

Available on request: TE81B132: Tool for lower collar (2” + 3” TCM) complete

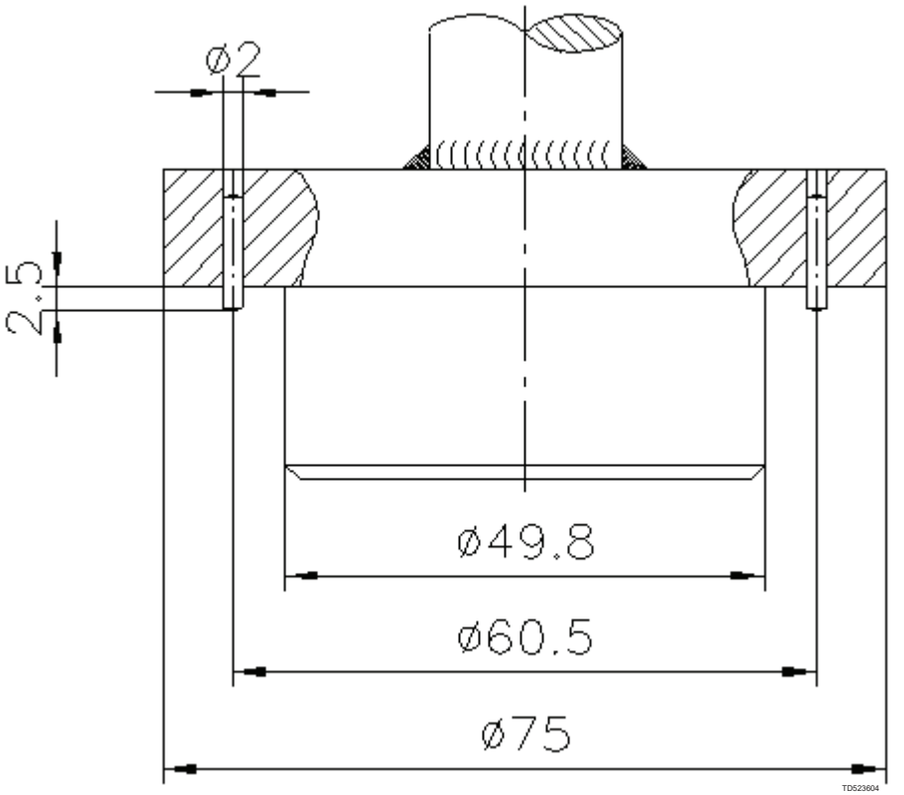

Pos	Qty	Denomination	Item no.
Tools			
		Standard tool kit IM 25	TE81B065
Consisting of:			
	1	Hex key	TE134
	1	Hex screwdriver	TE134A
	1	Hex key	TE135
	1	Hex screwdriver	TE135A
	1	Caliper	TE369
Available on request			
		Pusher for collar bush 2”	TE81B031
		Fixture set for collar bush 2”	TE81B032
		Tool for lower collar (2” + 3” TCM) complete	TE81B132

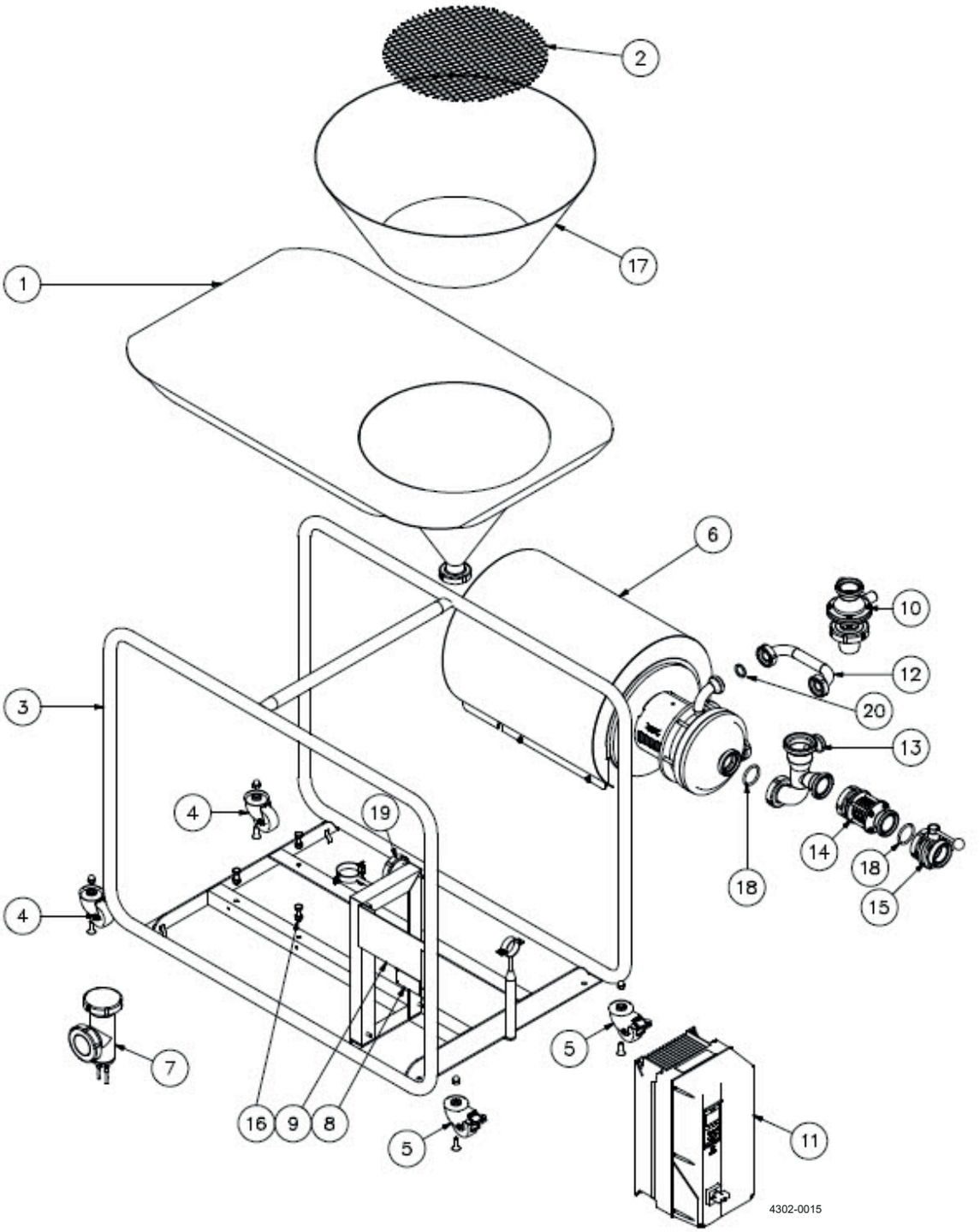
2
17
1
6
10
12
20
3
13
4
19
14
18
18
15
4
7
5
16
9
8
5
11
4302-0015

Pos		Qty	Denomination	item no.
1		1	Table plate/Funnel	On request
2		1	Safety mesh	On request
3		1	Base frame, complete	On request
4		2	Fixed wheels	9614452101
5		2	Brake wheels	9614452102
6		1	High shear and pump unit, complete	Note*
7		1	Flush container, complete	Note*
10		1	C-ball valve, complete	Note*
11	☐	1	Frequency converter, ROW/US	9614232401
	☐	1	Frequency converter, CANADA	9614232402
12		1	By-pass tube	On request
13		1	Inlet tube, complete	Note*
14		1	Sight glass, complete	Note*
15		1	Butterfly valve, complete	Note*
16		4	Screw and nut	
18	☐	2	Seal ring, EPDM, DN50, DIN 11850	9611900259
	☐	2	Seal ring, FPM, DN50, DIN 11850	9611995991
19		1	Blind cap, (for CIP), 14301	On request
20		1	Seal ring, EPDM, DN25, DIN 11850	9611900256
		1	Seal ring, FPM, DN25, DIN 11850	9611995990

Note*: See separate part lists in the next sections of this manual

☐ Configuration according to delivery note/order.

1.3

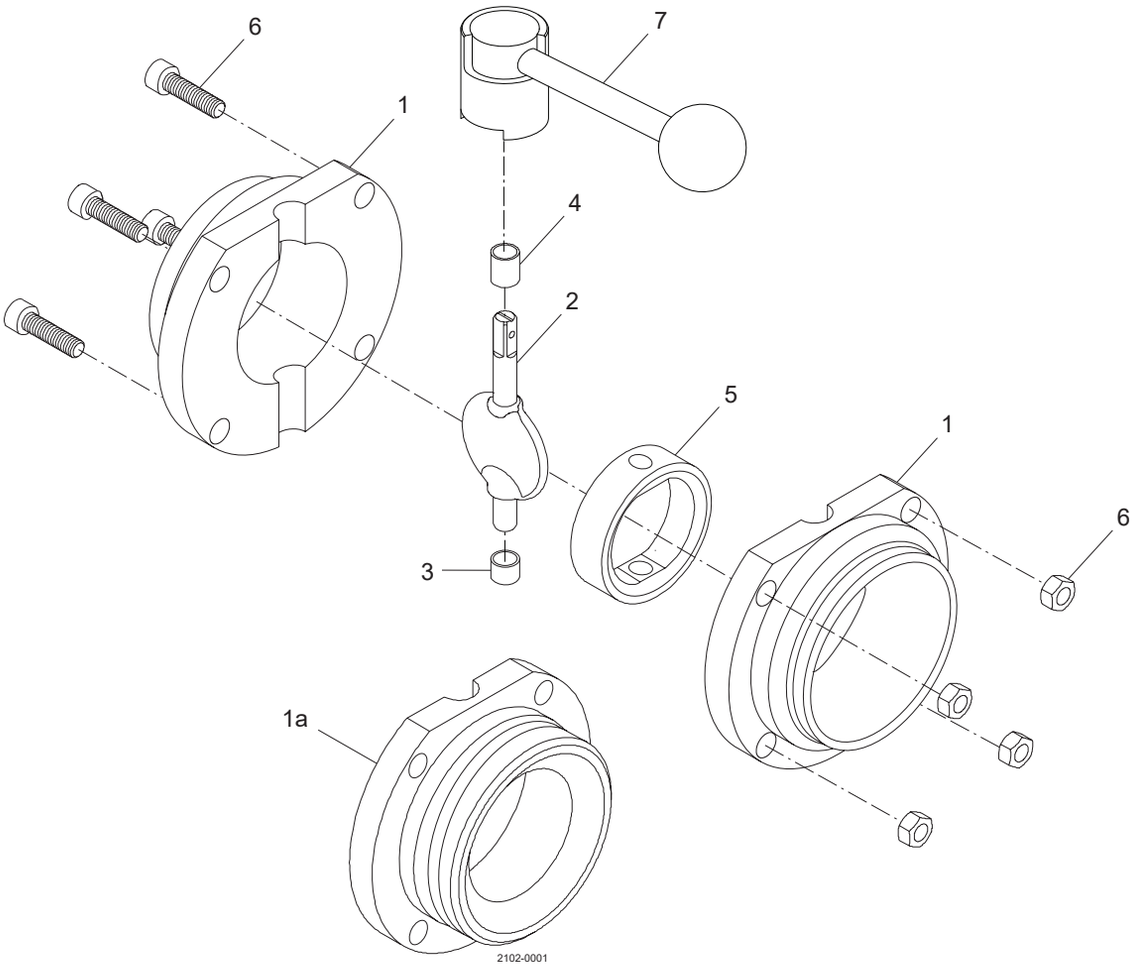

Pos	Qty	Denomination	Item no.	Material
1 □	2	Valve body half, welding		
1a □	2	Valve body half, male part		
2	1	Disc	9612073904	AISI 316L
3 ✧●	1	Bush	9611411890	
4 ✧●	1	Bush	9611411890	
5 ✧	1	Seal ring	9612070301	EPDM
●	1	Seal ring	9612072101	FPM
6	1	Set screw, M8 + Nut M8	9611417350	
7	1	Handle	9612045001	

Service Kits for product wetted parts

Service Kit, EPDM	9611923078
Service Kit, FPM	9611923094

Parts marked with ✧ are included in the Service Kit, EPDM: 9611923078
Parts marked with ● are included in the Service Kit, FPM: 9611923094

□ Configuration according to delivery note/order.

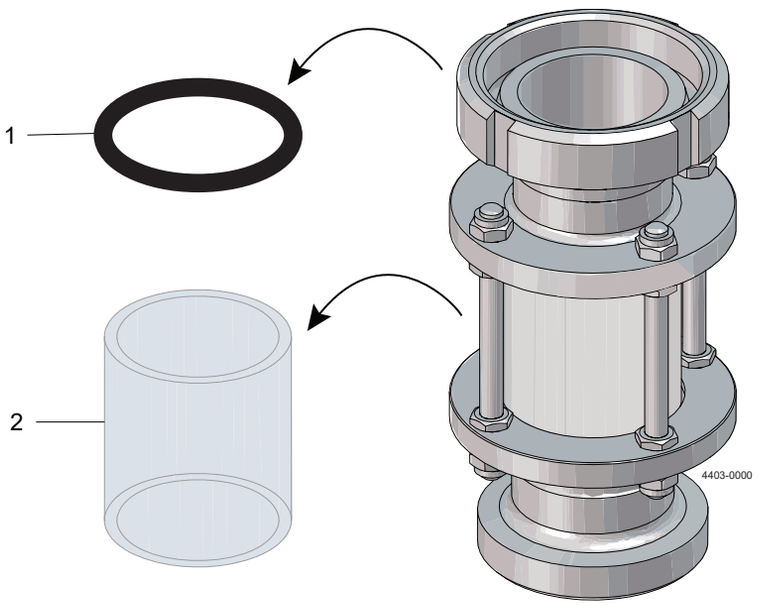
1
2
4403-0000

Pos		Qty	Denomination	Item no.
1	□	1	Seal ring, EPDM	9611995993
	□	1	Seal ring, FPM	9611995994
2		1	Glas tube, DN50	9611991438

□ Configuration according to delivery note/order.

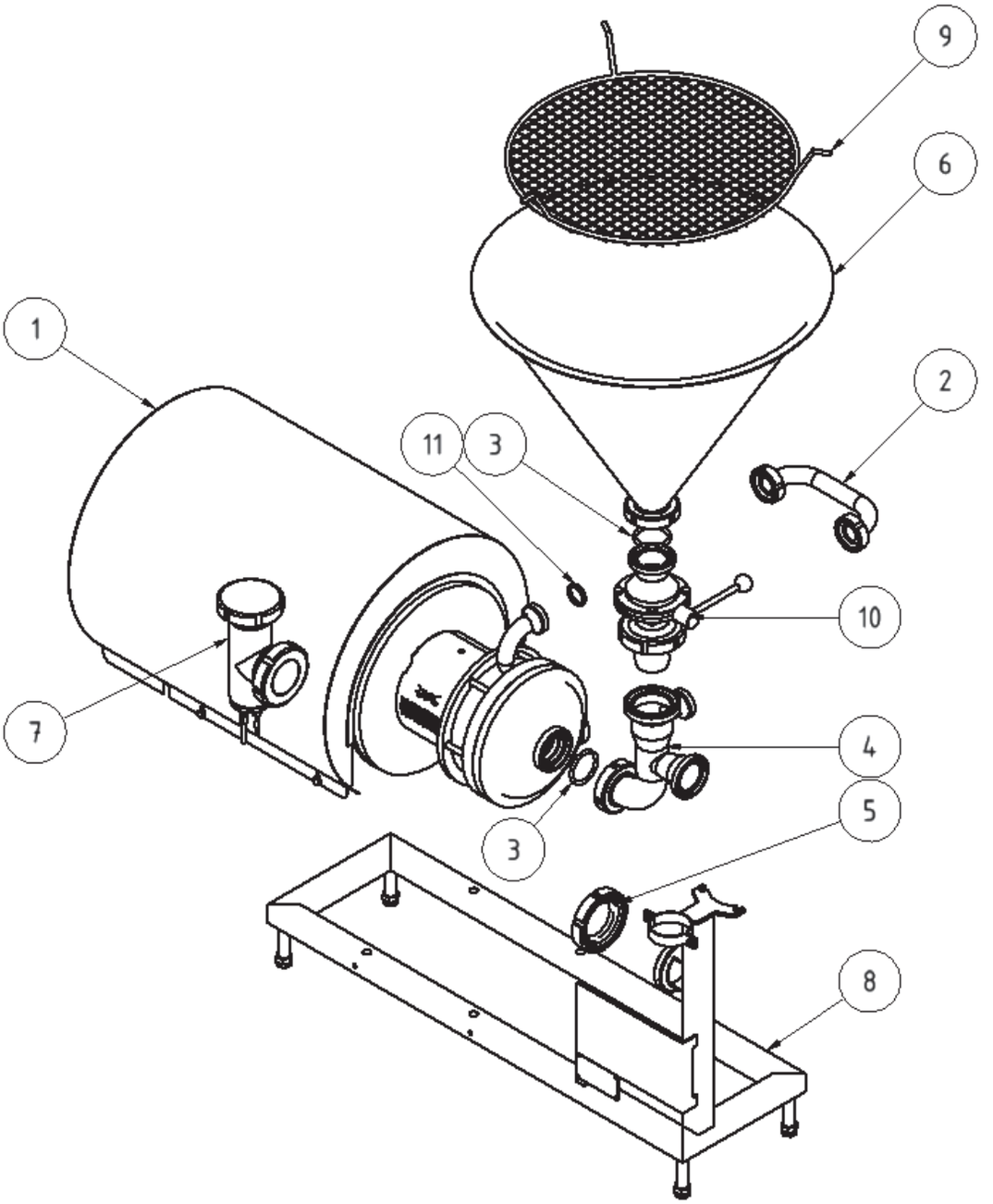
9
6
1
2
11
3
10
7
4
3
5
8

Pos		Qty	Denomination	Item no.	Material
1		1	High shear and pump unit	Note*	
2		1	By-pass tube	On request	
3	☐	2	Seal ring, DN50, DIN 11850	9611900259	EPDM
	☐	2	Seal ring, DN50, DIN 11850	9611995991	FPM
4		1	Inlet tube, complete	Note*	
5		1	Blind cap (for CIP)	On request	
6		1	Funnel	On request	
7		1	Flush container, complete	Note*	
8		1	Base frame, complete	On request	
9		1	Safety Mesh	On request	
10		1	C-ball valve, complete	Note*	
11	☐	1	Seal ring, DN25, DIN 11850	9611900256	EPDM
	☐	1	Seal ring, DN25, DIN 11850	9611995990	FPM

Note*: See separate part lists in the next sections of this manual

☐ Configuration according to delivery note/order.

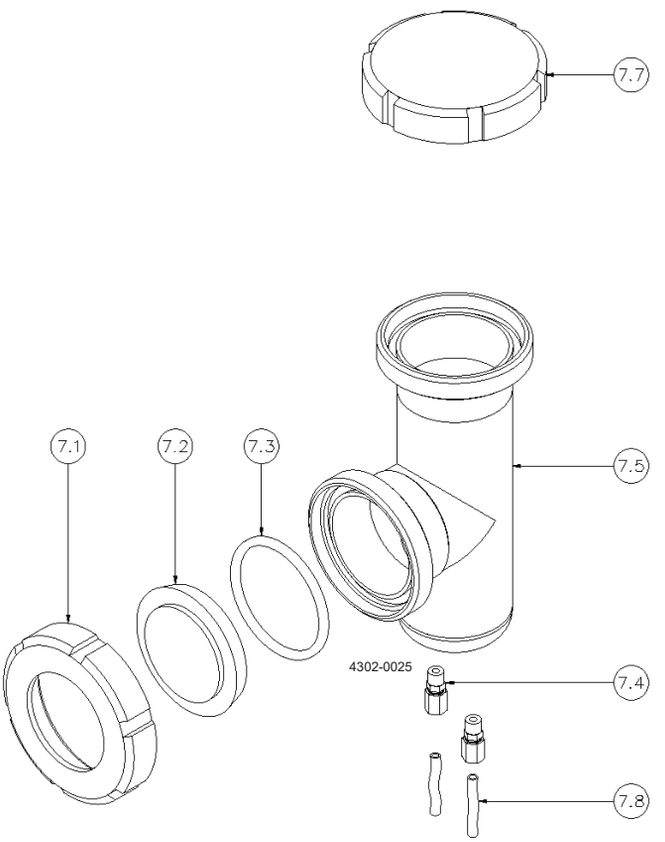
7.7
7.1
7.2
7.3
7.5
4302-0025
7.4
7.8

Pos	Qty	Denomination	Item no.	Material
7.1	1	Nut, union	On request	
7.2	1	Sight glass	9611993744	
7.3	1	Seal	9612906208	EPDM
7.4	2	Tube connection	On request	
7.5	1	Flush container house	On request	
7.7	1	Blind cap	9611291481	14301
7.8	2	Tube	On request	

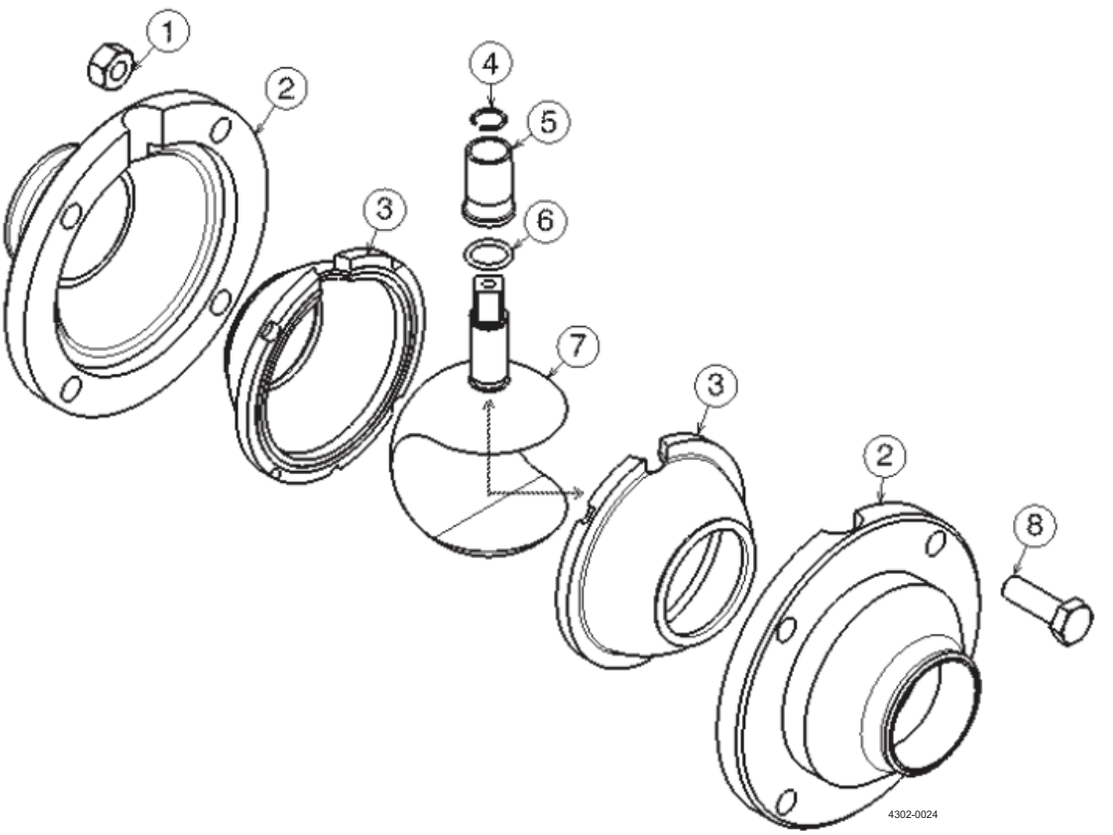
1
2
3
4
5
6
7
3
2
8
4302-0024

Pos		Qty	Denomination	Item no.
1		1	Nut, M8	
2		2	Housing	On request
3	◆	2	Seal, FPM	
4	◆	1	Snap ring	
5	◆	1	Guide sleeve	
6	◆	1	O-ring	
7		1	C-ball with shaft	9614451801
8		1	Bolt	
		1	Handle for C-Ball Valve	9614463701

Service Kits & Service Valve

Service Kit FPM[1]	9614451701
Service Kit, PTFE[2]	8010000839
Service Valve, C-Ball valve complete for Hybrid Powder Mixer HPM-S15 and HPM-M15[3]	8010004893

Parts marked with ◆ are included in the Service Kit for C Ball valve: 9614451701

[1] Service Kit FPM is the Standard Service Kit for Hybrid Powder Mixers and what is recommended.
[2] Service Kit PTFE can be used for special applications where the Service Kit FPM does not work properly.
[3] Service Valve to replace C-Ball valve in use while servicing it.

NOTE
From and with serial number 50083 the Hybrid Powder Mixers were born with FPM Sealing. Before that it was PTFE sealing.

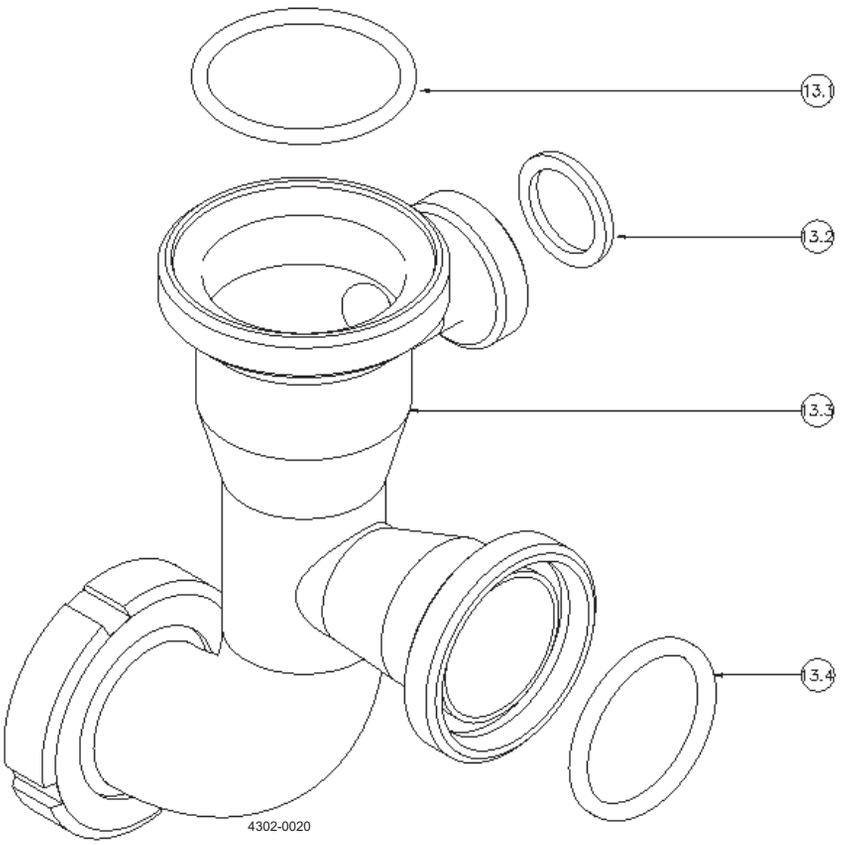
13.1
13.2
13.3
13.4
4302-0020

Pos	Qty	Denomination	Item no.	Material
13.1□	1	O-ring seal	9612906208	EPDM
□	1	O-ring seal	9612906218	FPM
13.2□	1	Seal	9611900256	EPDM
□	1	Seal	9611995990	FPM
13.3	1	Inlet tube	On request	
13.4□	1	Seal	9611900259	EPDM
□	1	Seal	9611995991	FPM

□ Configuration according to delivery note/order.

1.3

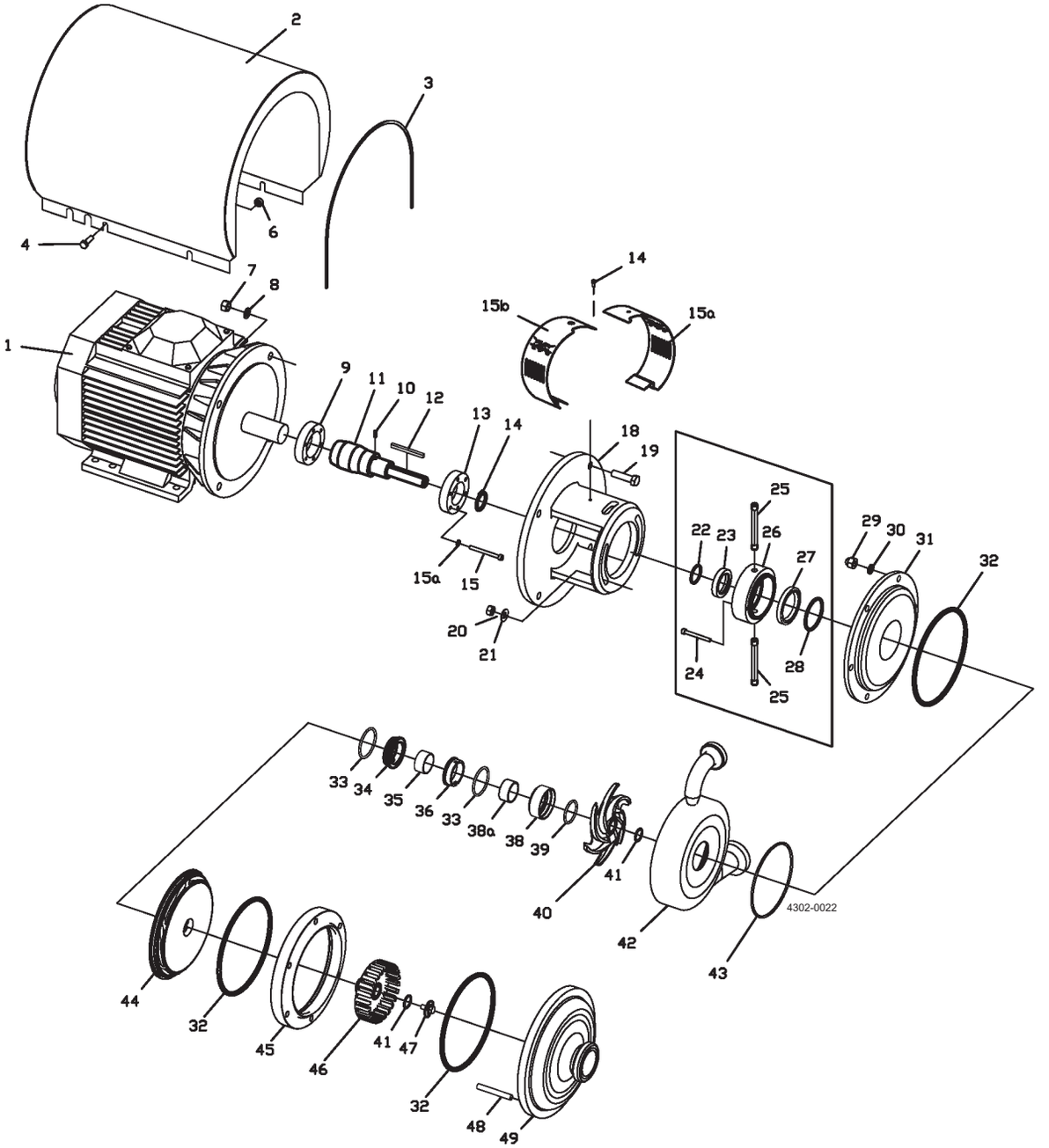

NOTE
The drawing above is showing the ROW version - shroud pos. 2 is not included in the US/CANADA version since the motor is a Wash Down version.

NOTE
Position 14 is not included in both US/CANADA and ROW version of the Hybrid Powder Mixer.

Pos		Qty	Denomination	Item no.
32	□✧	1	O-ring, FPM	9611992746
	□●	1	O-ring, EPDM	9611992744
42		1	Pump house	On request
45		1	Extension ring	On request
46		1	Rotor	9614458501
49		1	Front plate / Stator	9614458601

Please see parts list for LKH-112 in separate pump manual.
The parts above are either additional, revised or replaced by components of the LKH-112 pump except for the service Kits.

Service Kits

Service Kit FPM LKH-112 SIC/SIC flushed shaft seal	9611922660[1)]
Service Kit EPDM LKH-112 SIC/SIC flushed shaft seal	9611922658[2)]

Parts marked with ✧ are included in the Service Kit, FPM: 9611922660
[1)] Please order 1 pcs item no. 9611992746 (pos. 32) extra for this Kit

Parts marked with ● are included in the Service Kit, EPDM: 9611922658
[2)] Please order 1 pcs item no. 9611992744 (pos. 32) extra for this Kit

□ Configuration according to delivery note/order.

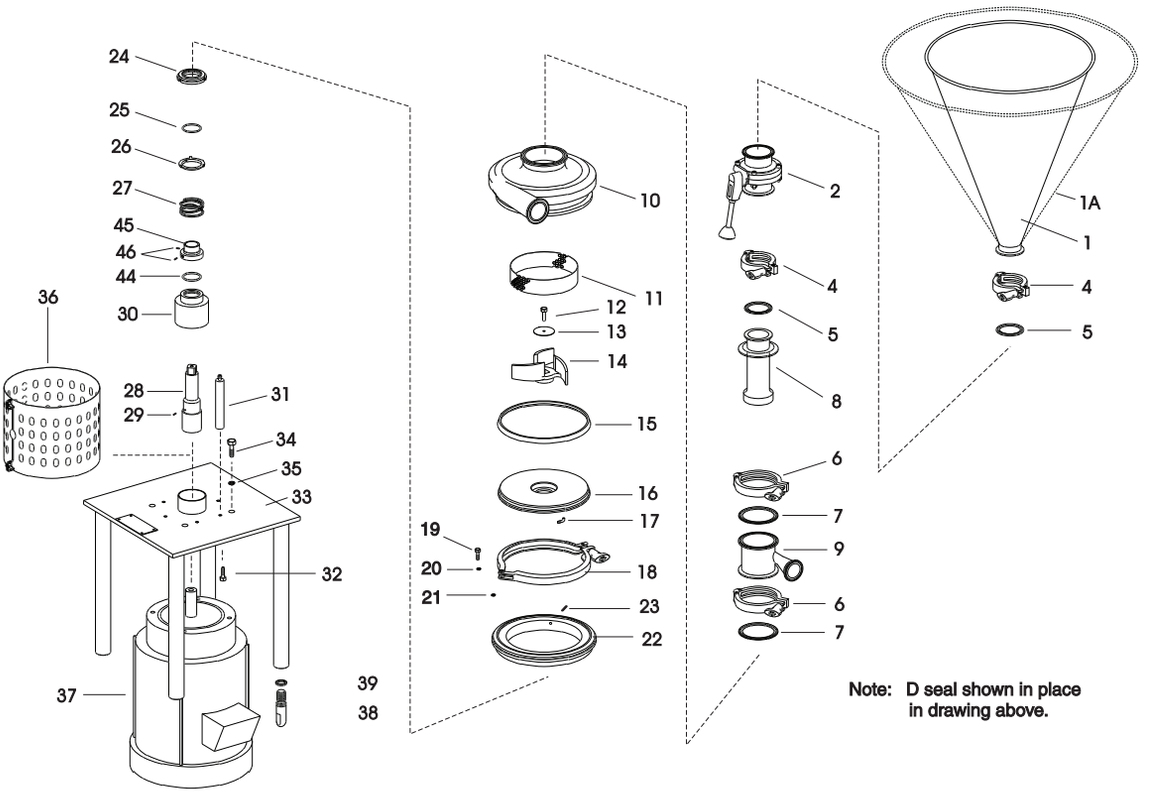
24
25
26
27
45
46
44
30
36
28
29
31
34
35
33
32
37
39
38
10
11
12
13
14
15
16
17
19
20
21
18
23
22
2
4
5
8
6
7
9
6
7
1A
1
4
5
Note: D seal shown in place in drawing above.

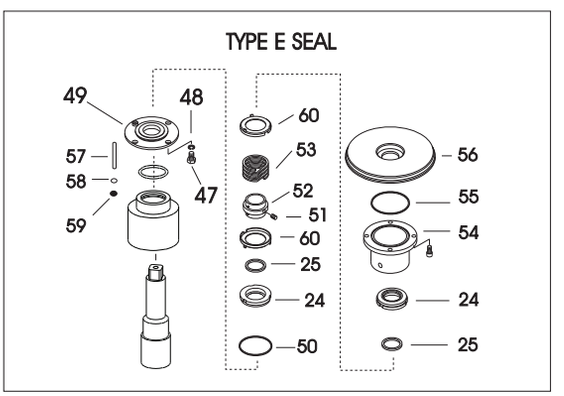
TYPE E SEAL
49
48
57
58
59
47
60
53
52
51
60
25
24
50
56
55
54
24
25

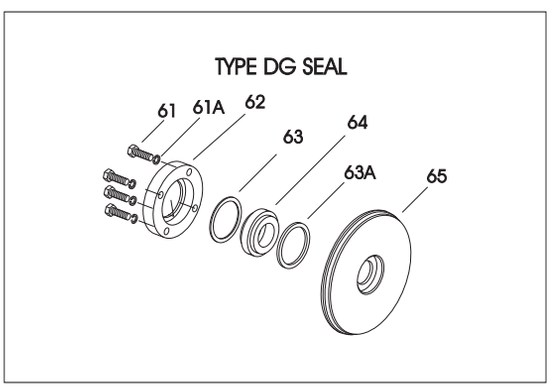
TYPE DG SEAL
61
61A
62
63
64
63A
65

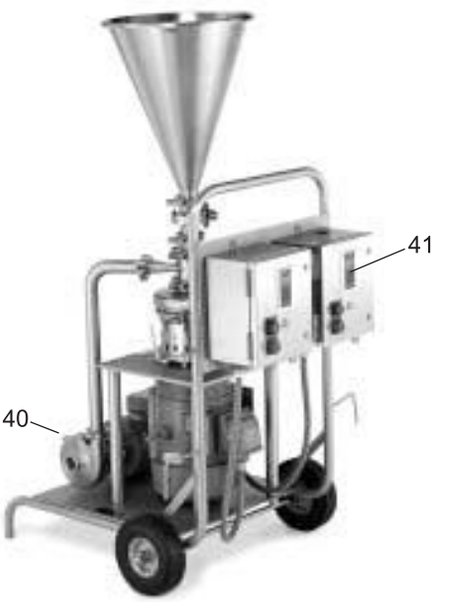
41
40

Pos		Qty	Denomination	
1		1	40 degree hopper	540025
1A		1	60 degree hopper	540026
2		1	Manual butterfly valve EPDM	330307
		1	Manual butterfly valve SFY	330297
4		2	Clamp	212196
5		2	Gasket BUNA	298453
		2	Gasket EPDM	290043
		2	Gasket SFY	290030
6		2	Clamp	212198
7		2	Gasket BUNA	298455
		2	Gasket EPDM	290036
		2	Gasket SFY	290049
8		1	Diffuser & suction tube	540015
9		1	Inlet adapter	540323
10		1	Casing	540126
11		1	Screen	540140
12		1	Capscrew	189753
13		1	Washer	540218
14		1	Impeller	542336
15	□♦	1	Gasket BUNA	483195
	□♦	1	Gasket EPDM	480096
	□♦	1	Gasket SFY	480201
16		1	Backplate	483133
17		2	Backplate pin	483263
18		1	Clamp	482258
22		1	Adapter	480348
23		1	Adapter pin	483396
24	□♦	1	Carbon seal	480510
25	□♦	1	Seal O-ring BUNA	300552
	□♦	1	Seal O-ring EPDM	300027
	□♦	1	Seal O-ring SFY	300064
26	□	1	Cup	483601
27	□	1	Spring	483602
28		1	Stubshaft	540159
29		2	Set-screw shaft	180330
30		1	Deflector	540160
31		6	Spacer	540162
32		6	Capscrew	189597
33		1	Base	Not available
34		4	Capscrew	189888
35		4	Lockwasher	189971
36		1	Seal guard	482732
37		1	Motor 184tc	9634084602
38		4	Adjustable leg	580022
39		4	O-ring	296257
40		1	Supply pump	See C Series Spares (C114)
41		2	Motor starters	760827
44	□♦	1	Seal O-ring BUNA	480479
	□♦	1	Seal O-ring EPDM	480226
	□♦	1	Seal O-ring SFY	480656
45		1	Drive collar	481628
46		2	Set screw drive collar D-seal	189840
47		4	Screw-follower	189800
48		4	Lockwasher-follower	189962
49		1	Follower	540163
50	♦	1	Follower O-ring BUNA	751064
	♦	1	Follower O-ring EPDM	751538
	♦	1	Follower O-ring SFY	751305
51		2	Set screw drive collar E-seal	189819
52		1	Drive collar E-seal	481271
53	♦	1	Seal spring E-seal	481334
54		1	Stuffing box E-seal	482276
55	♦	1	Stuffing box O-ring BUNA	755489
	♦	1	Stuffing box O-ring EPDM	750081
	♦	1	Stuffing box O-ring SFY	750740
56		1	Backplate e seal	482272
57		4	Stud E-seal	540164
58		4	Lockwasher E-seal	189985
59		4	Nut E-seal	189919
60	♦	2	Cup E-seal	481333
61		4	Screw gland ring-DG seal	189849
61A		4	Lockwasher DG seal	189962
62		1	Gland ring DG seal	480176
63	○	1	PTFE gasket-outboard DG seal	481521
63A	○	1	PTFE gasket-inboard DG seal	482808
64	○	1	Seal seat DG (cer)	480111
	○	1	Seal seat DG (sc)	481519
	○	1	Seal seat DG (tc)	480477
65		1	Backplate DG seal	480174

Parts marked with □♦○ are included in the service kits.

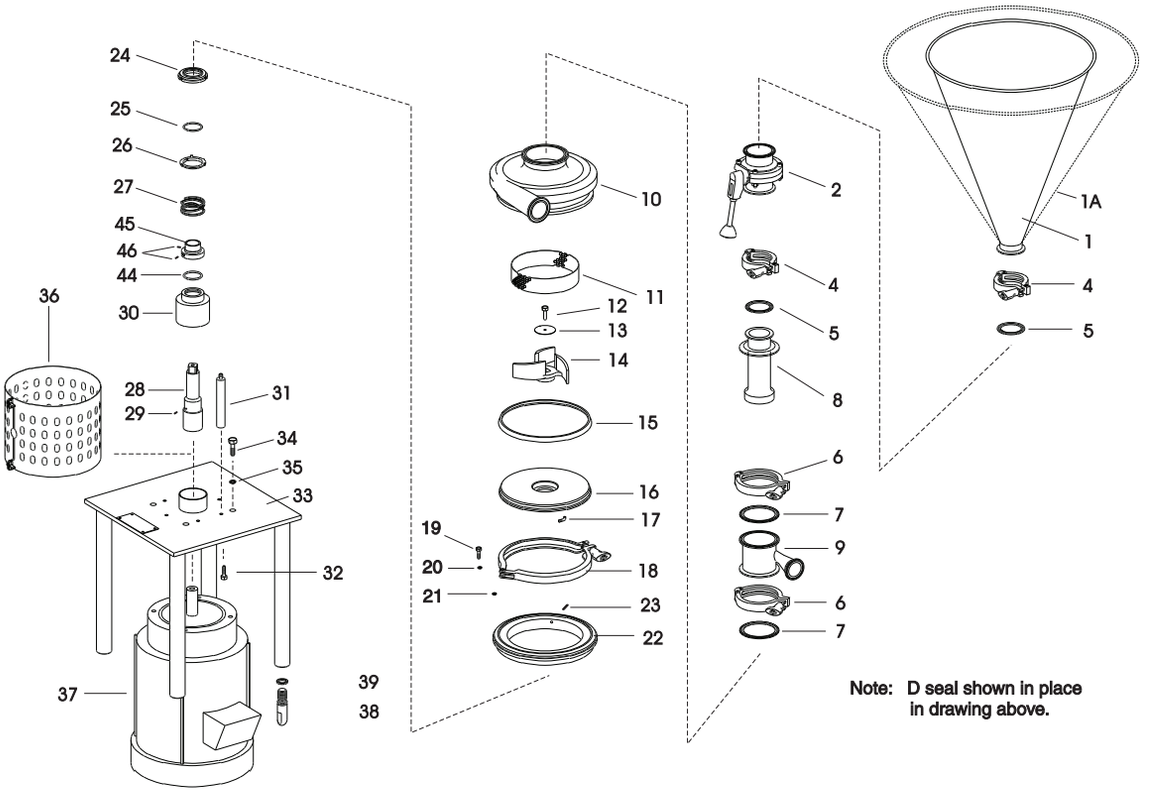
24
25
26
27
45
46
44
30
36
28
29
31
34
35
33
32
37
39
38
10
11
12
13
14
15
16
17
19
20
21
18
23
22
2
4
5
8
6
7
9
6
7
1A
1
4
5
Note: D seal shown in place in drawing above.

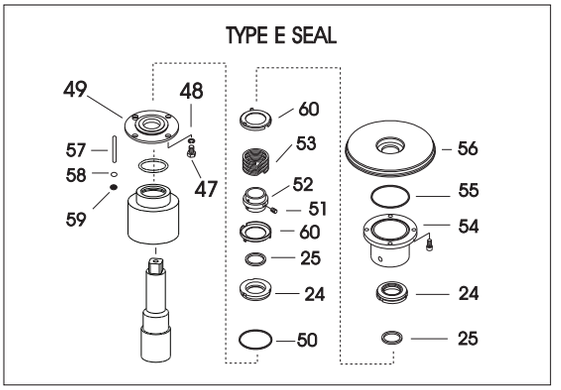
TYPE E SEAL
49
48
57
58
59
47
60
53
52
51
60
25
24
50
56
55
54
24
25

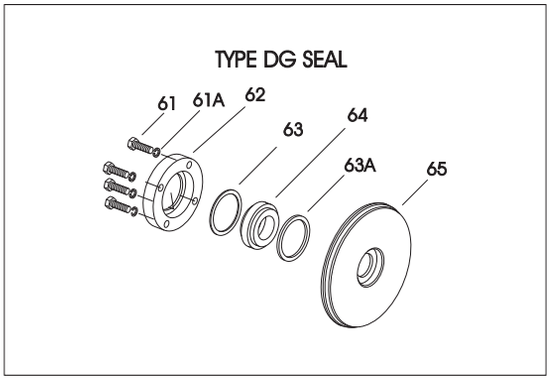
TYPE DG SEAL
61
61A
62
63
64
63A
65

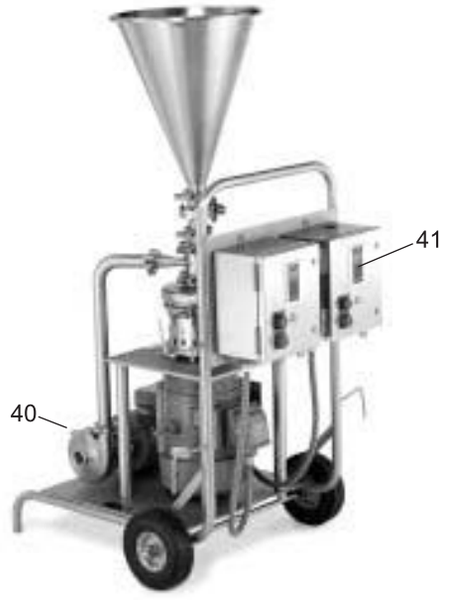
41
40

□	D seal service kits - BUNA	9613990402
□	D seal service kits - EPDM	9613990403
□	D seal service kits - SFY	9613990404
◆	E seal service kits - BUNA	9613990405
◆	E seal service kits - EPDM	9613990406
◆	E seal service kits - SFY	9613990407
○	DG seal service kits* - SC	9613990408
○	DG seal service kits* - CER	9613990409
○	DG seal service kits* - TC	9613990409

*does not include rotating seal parts or casing gasket

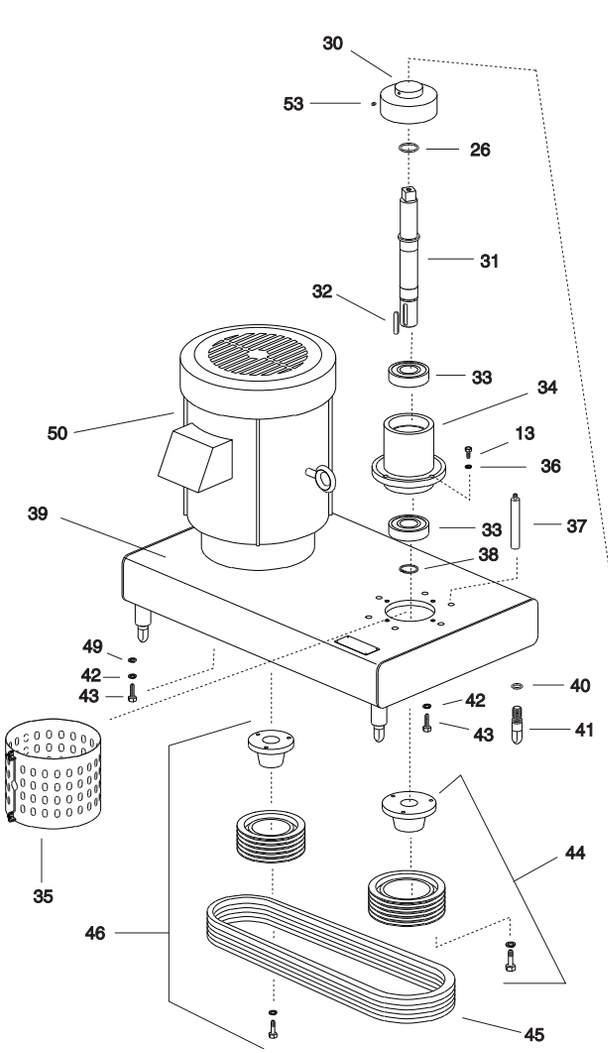

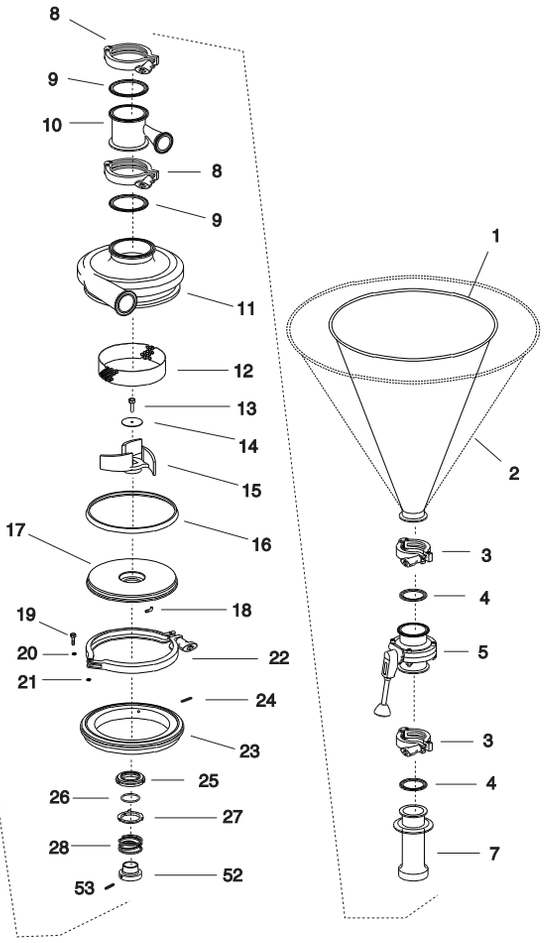

Note: D seal shown in place in drawing above.

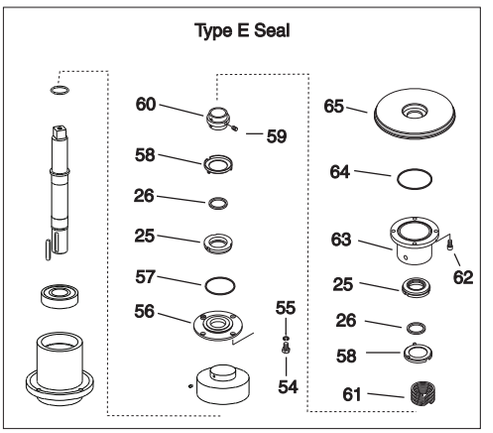

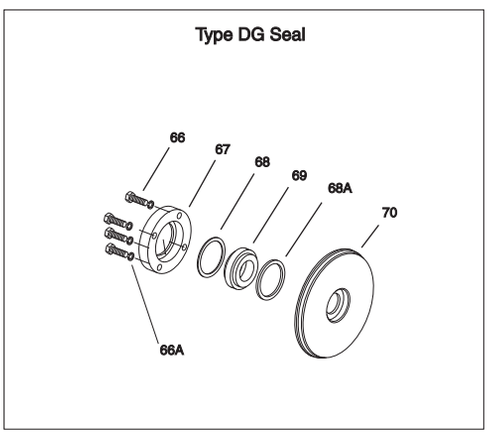

Pos		Qty	Denomination	
1		1	40 degree hopper	540049
2		1	60 degree hopper	540050
3		2	Clamp	212198
4		2	Gasket BUNA	298455
		2	Gasket EPDM	290036
		2	Gasket SFY	290049
5		1	Manual butterfly valve EPDM	330309
		1	Manual butterfly valve SFY	330299
7		1	Diffuser & suction tube	540063
8		2	Clamp	212199
9		2	Gasket BUNA	298456
		2	Gasket EPDM	290018
		2	Gasket SFY	290053
10		1	Inlet adapter	540071
11		1	Casing	540127
12		1	Screen	540143
13		1	Capscrew	189846
14		1	Washer	540067
15		1	Impeller	540101
16	□♦	1	Gasket BUNA	484083
	□♦	1	Gasket EPDM	480232
	□♦	1	Gasket SFY	480575
17		1	Backplate D-seal	480882
18		2	Backplate pin	483263
22		1	Clamp	480285
23		1	Adapter ring	480877
24		2	Adapter pin	483396
25	□♦	1	Carbon seal	480525
	□♦	1	Seal O-ring D-seal BUNA	480479
	□♦	1	Seal O-ring D-seal EPDM	480226
	□♦	1	Seal O-ring D-seal SFY	480656
27	□	1	Cup D-seal	484362
28	□	1	Spring D-seal	484363
30		1	Deflector	9634051465
31		1	Shaft	540156
32		1	Key-pulley	540048
33		2	Bearing-sealed	540034
34		1	Bearing housing	540119
35		1	Seal guard assembly	540263
36		4	Lockwasher	189968
37		6	Spacer	540051
38		1	Retainer ring	540059
39		1	Base	Not available
40		4	O-ring, leg	296257
41		4	Leg - adjustable	580022
42		10	Lockwasher-spacer	189971
43		10	Capscrew-spacer	189888
44		1	60 cycle blender sheave	540248
		1	50 cycle blender sheave	540250
45		3	Drive belt	540224
46		1	60 cycle motor sheave	540249
		1	50 cycle motor sheave	540251
49		4	Washer	189952
50		1	Motor 20 hp - 1800 256tc	Contact Alfa Laval
52		1	Drive collar D-seal	480864
53		2	Set screw D-seal drive collar	189840
54		4	Screw-follower	189773
55		4	Lockwasher-follower	189962
56		1	Follower	481211
57	♦	1	Follower O-ring BUNA	751297
	♦	1	Follower O-ring EPDM	751634
	♦	1	Follower O-ring SFY	751307
58	♦	2	Cup seal E-seal	480525
59		2	Set screw E-seal drive collar	189819
60		1	Drive collar E-seal	481212
61	♦	1	Spring E-seal	481210
62		4	Screw-stuffing box	180352
63		1	Stuffing box	540232
64	♦	1	Stuffing box O-ring BUNA	755528
	♦	1	Stuffing box O-ring EPDM	750575
	♦	1	Stuffing box O-ring SFY	751306
65		1	Backplate E-seal	482277
66		4	Screw - gland ring	189849
67		1	Gland ring	480050
68	○	1	PTFE gasket-outboard	481522
68A	○	1	PTFE gasket-inboard	481522
69	○	1	Seal seat DG seal (cer)	480238
	○	1	Seal seat DG seal (tc)	480466
	○	1	Seal seat DG seal (sc)	481470
70		1	Backplate	480043

Parts marked with □♦○ are included in the service kits.

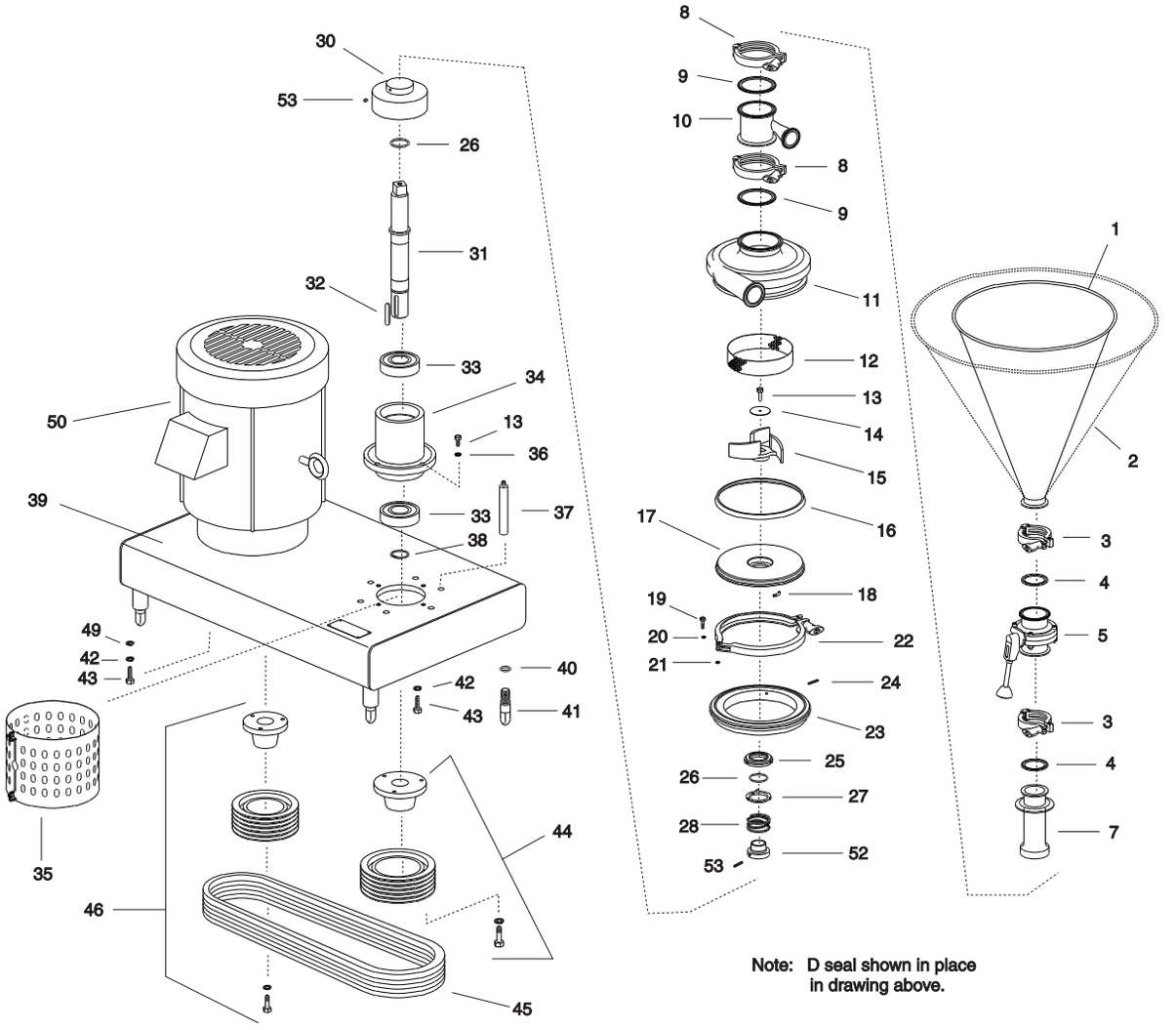

Note: D seal shown in place in drawing above.

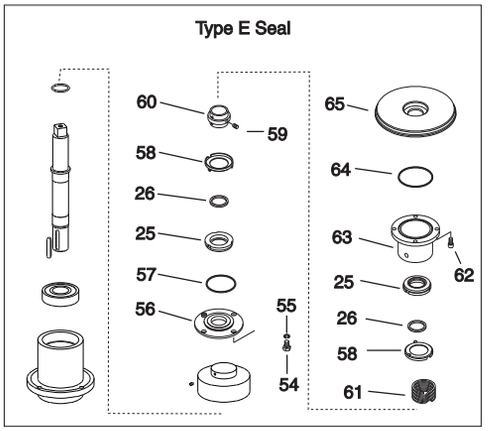

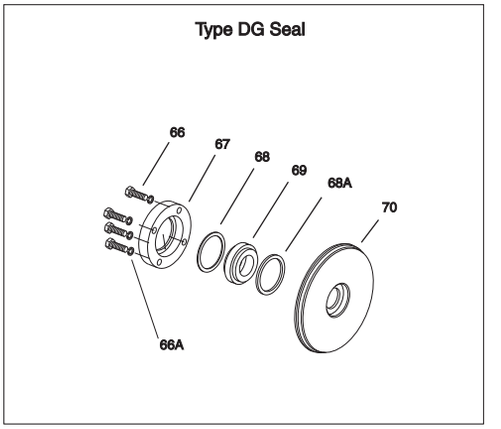

□	D seal service kits - BUNA	9613990411
□	D seal service kits - EPDM	9613990412
□	D seal service kits - SFY	9613990413
◆	E seal service kits - BUNA	9613990414
◆	E seal service kits - EPDM	9613990415
◆	E seal service kits - SFY	9613990416
○	DG seal service kits* - SC	9613990417
○	DG seal service kits* - CER	9613990418
○	DG seal service kits* - TC	9613990419

*does not include rotating seal parts or casing gasket

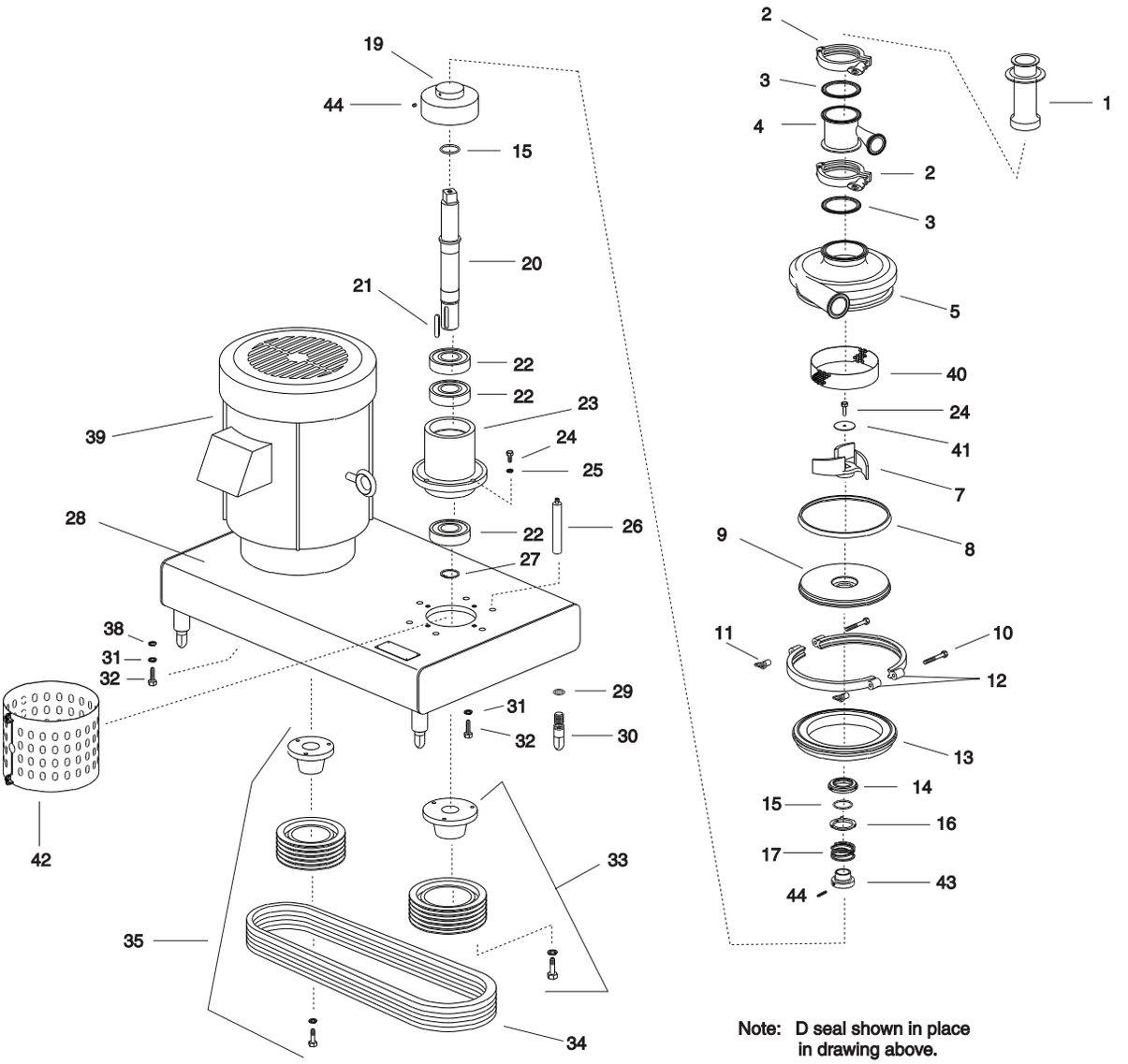

Note: D seal shown in place in drawing above.

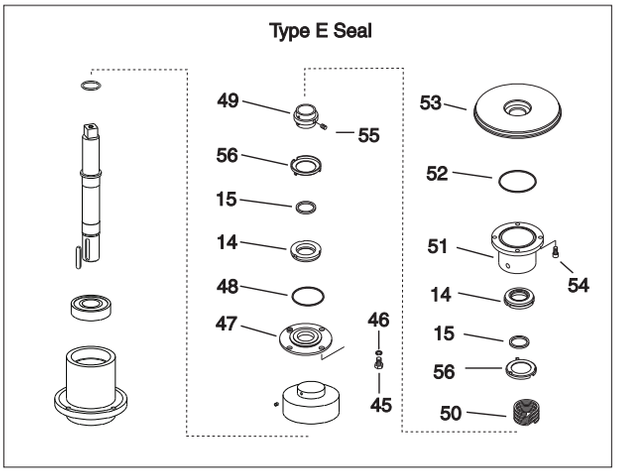

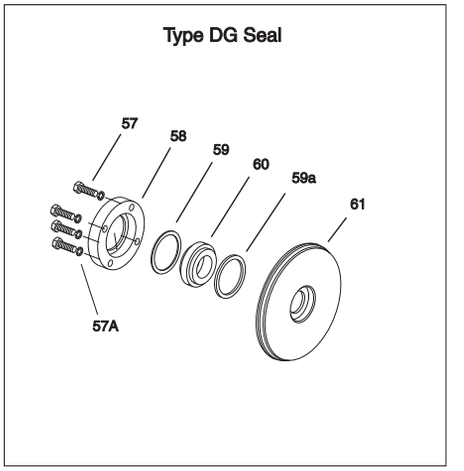

Pos		Qty	Denomination	
1		1	Diffuser & suction tube	540129
2		2	Clamp	212211
3		2	Gasket	298360
4		1	Inlet adapter	540130
5		1	Casing	540135
7		1	Impeller	540261
8	□♦	2	Gasket BUNA	488389
	□♦	2	Gasket EPDM	480729
	□♦	2	Gasket SFY	480861
9		1	Backplate D-seal	488103
12		1	Clamp	481624
13		1	Adapter ring	540115
14	□♦	1	Carbon seal	480525
15	□♦	1	Seal O-ring BUNA	480479
	□♦	1	Seal O-ring EPDM	480226
	□♦	1	Seal O-ring SFY	480656
16	□	1	Cup D-seal	484362
17	□	2	Spring D-seal	484363
19		1	Deflector	9634051465
20		1	Drive shaft	540262
21		1	Key-pulley	540048
23		1	Bearing housing	540119
24		5	Capscrew-housing	189846
25		4	Lockwasher-housing	189968
26		6	Spacer	540142
27		1	Retaining ring	540059
28		1	Base	NA
29		4	O-ring, leg	296257
30		4	Adjustable leg	580022
31		10	Lockwasher-spacer	189971
32		10	Capscrew-spacer	189888
33		1	60 cycle blender sheave	540280
		1	50 cycle blender sheave	540324
34		4	Drive belt	540221
35		1	60 cycle motor sheave	540281
		1	50 cycle motor sheave	540281
36		2	Capscrew	189842
37		2	Lockwasher	189942
38		4	Washer	189952
39		1	Motor 20 hp - 1800 256tc	Contact Alfa Laval
40		1	Screen	540144
41		1	Impeller washer	540216
42		1	Seal guard	540263
43		1	Drive collar D-seal	480864
44		1	Set screw D-seal drive collar	189840
45		4	Screw E-seal follower	189773
46		4	Lockwasher E-seal follower	189962
47		4	Follower	481211
48	♦	1	Follower O-ring BUNA	751297
	♦	1	Follower O-ring EPDM	751634
	♦	1	Follower O-ring SFY	751307
49		1	Drive collar E-seal	481212
50	♦	1	Spring E-seal	481210
51		1	Stuffing box E-seal	540232
52	♦	1	Stuffing box O-ring BUNA	755528
	♦	1	Stuffing box O-ring EPDM	750575
	♦	1	Stuffing box O-ring SFY	751306
53		1	Backplate E-seal	482455
54		1	Screw stuffing box	180352
55		4	Set screw E-seal drive collar	189819
56	♦	2	Cup E-seal	481209
57		4	Screw DG gland ring	189849
57A		4	Washer DG gland ring	189961
58		1	Gland ring	480050
59	○	1	PTFE gasket-outboard	481522
59A	○	1	PTFE gasket-inboard	482809
60	○	1	DG seal seat (cer)	480238
	○	1	DG seal seat (sc)	481470
	○	1	DG seal seat (tc)	480466
61		1	Backplate DG seal	480078

Parts marked with □♦○ are included in the service kits.

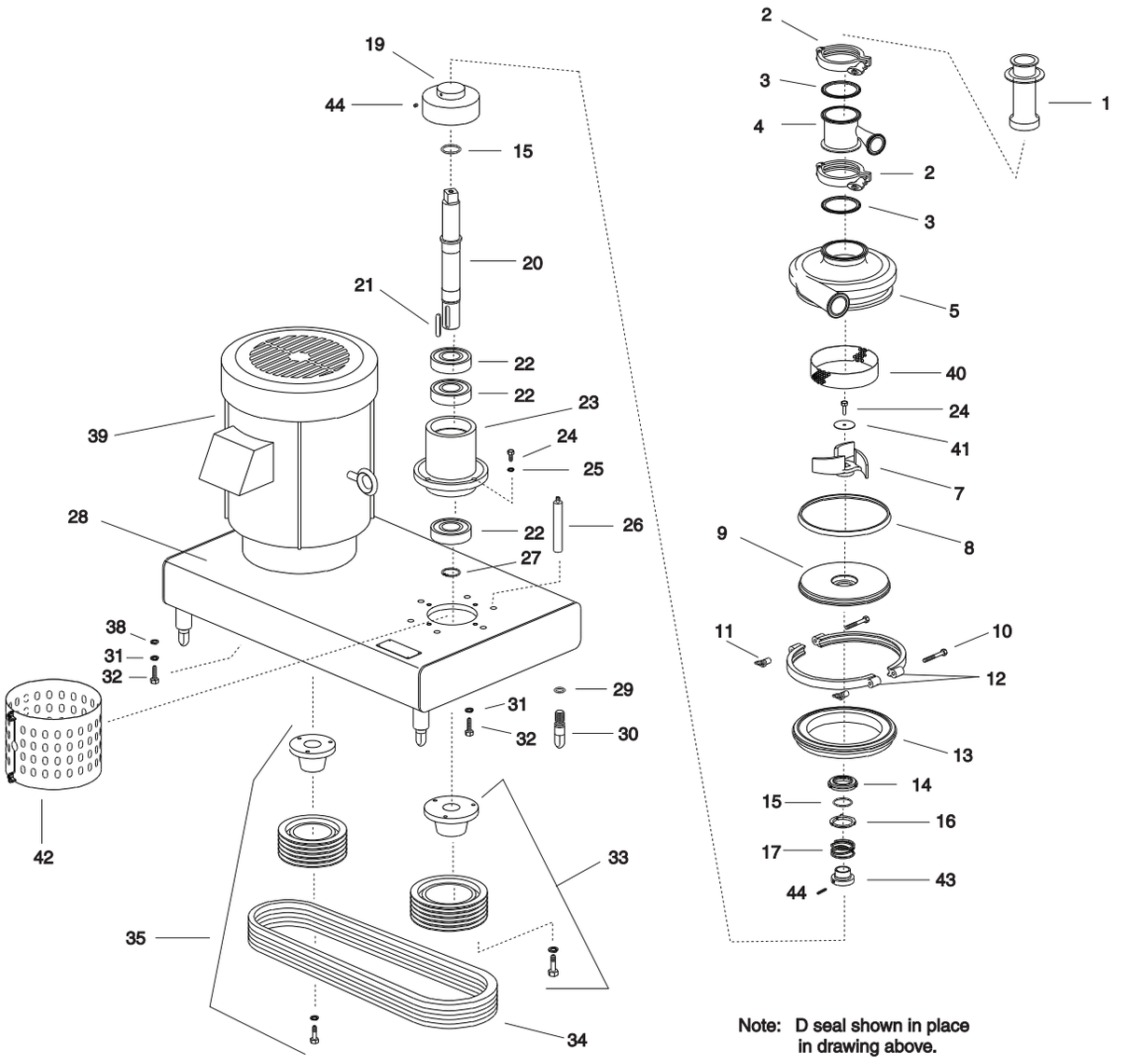

Note: D seal shown in place in drawing above.

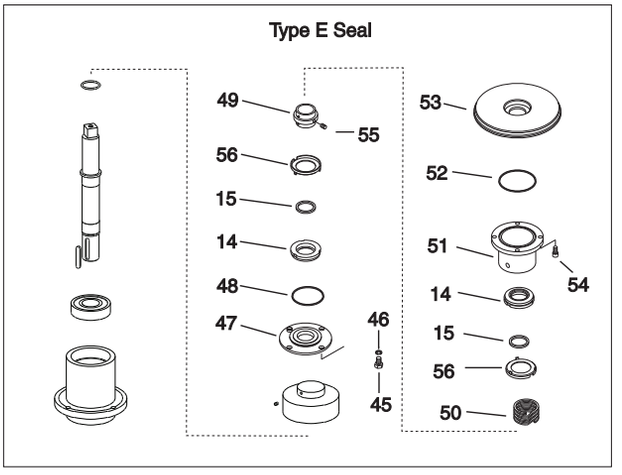

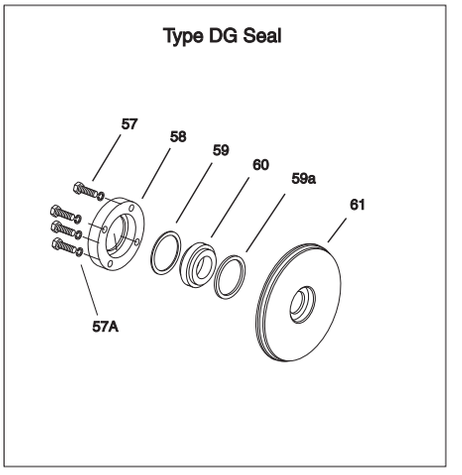

□	D seal service kits - BUNA	9613990420
□	D seal service kits - EPDM	9613990421
□	D seal service kits - SFY	9613990422
◆	E seal service kits - BUNA	9613990423
◆	E seal service kits - EPDM	9613990424
◆	E seal service kits - SFY	9613990425
○	DG seal service kits* - SC	9613990417
○	DG seal service kits* - CER	9613990418
○	DG seal service kits* - TC	9613990419

*does not include rotating seal parts or casing gasket

1.3

Not manufactured anymore

-2 and -3 versions

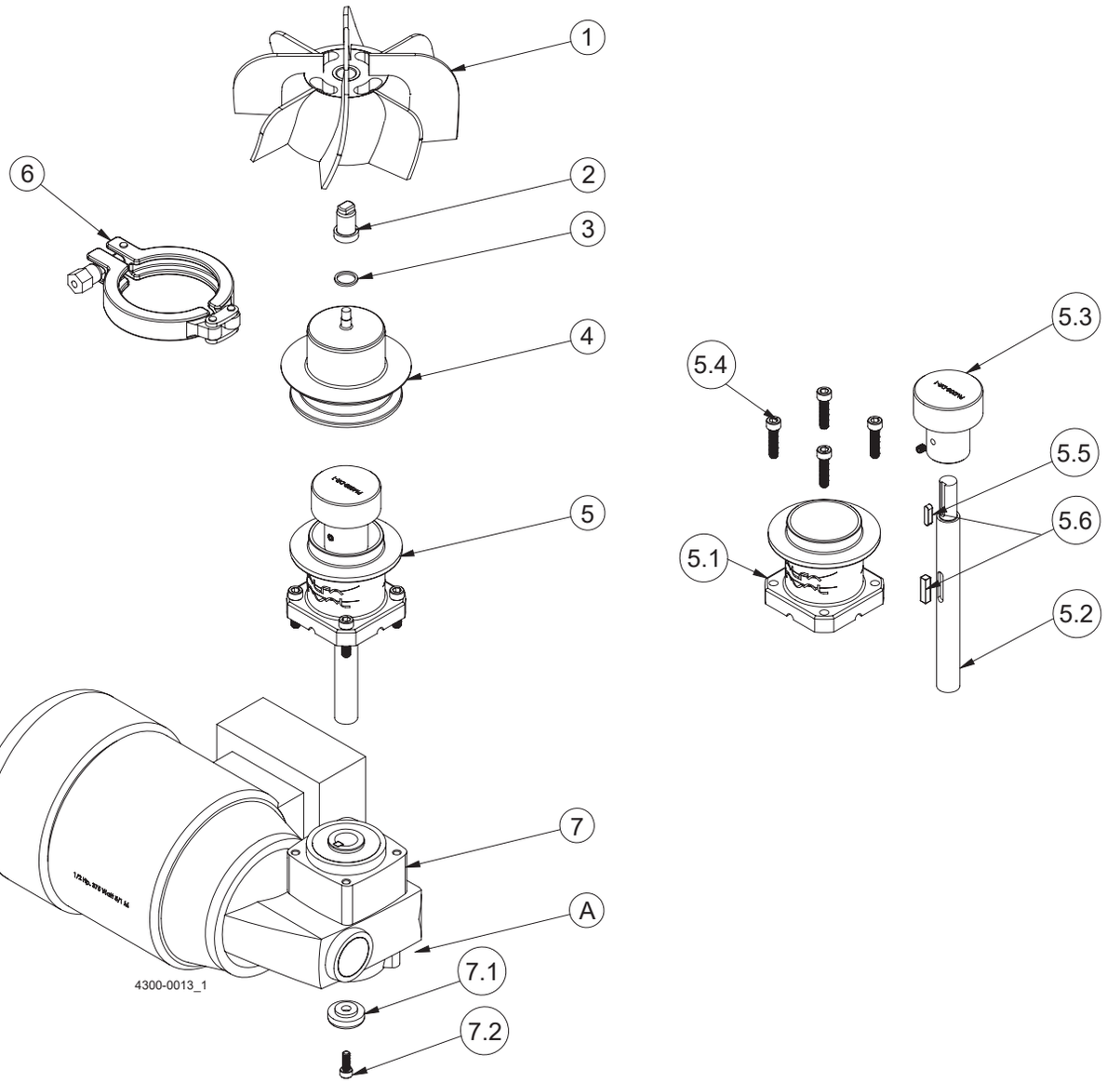

Pos. A: No fixing element cover = version 2 or 3

Parts list, Magnetic Mixer MM338
-2 and -3 versions

Pos		Qty	Denomination	Item no.	Size
1	□	-	IMP, PM338-4”-HSA IMPELLER, new (20 Ra max)	9634086378	4
	□	-	IMP, PM338-6”-HSA IMPELLER, new (20 Ra max)	9634086026	6
	□	-	IMP, PM338-4”-HSA-EP, new (20 Ra max plus Electro polish)	9634086513	4
	□	-	IMP, PM338-6”-HSA-EP, new (20 Ra max plus Electro polish)	9634086514	6
1*	□	-	MM338-IMPFB-REPAIR, R&R of female bearing	9634086486	All
	□	-	MM338-IMPFB-REPAIR-EP, R&R of female bearing +EP	9634089579	All
2		-	Male Bearing, YTZP (Zirconia Ceramic)	9634086107	
3		-	Male Bearing Gasket, ISOLAST® PerFluoro elastomer	9634086109	
4		-	Weld Plate, 316L Stainless Steel	9634086405	Accy**
5	□	-	Drive unit kit, see table below		
5.1	□	-	DU flange, see table below		
5.2	□	-	Axle, see table below		
5.3		-	Drive Rotor	9634086085	
5.4		-	SHCS, Stainless Steel		M6x25
5.5		-	Key	N/A	M4x16
5.6		-	Key, supplied with gear motor	N/A	M5x20
6		-	Clamp	9634086467	2.5”
7	□	-	Gear Motor code A, 3 X 230/460 VAC 60Hz	9634086551	0.5Hp
	□	-	Gear Motor code B, 3 X 332/575 VAC 60Hz	9634086552	0.5Hp
	□	-	Gear Motor code C, 3 X 205/355 VAC 50Hz (OBS)	9634086526	0.5Hp
	□	-	Gear Motor code D, 3 X 230/400 VAC 50Hz	9634086553	0.5Hp
7.1		-	Fixing Element, supplied with gear motor	N/A	
7.2		-	SHCS, supplied with gear motor	N/A	M5

Note*: Pos. 1 REPAIR: The impeller must be returned to Alfa Laval for repair. Please contact Customer Support.
Note**: Pos. 4: Accessory - not Spare part.

Version	Pos. 5 Drive unit kit	Pos. 5.1 DU flange	Pos. 5.2 Axle
-2, Stainless steel	9634086468	9634086455	9634086081
-3, extended version	9634086557	9634086560	9634086559

Conversion Kit to be used when upgrading the -2 or -3 Gearmotor to the -6 Drive Unit:

9614452001 MM338-6-DU CONVERSION KIT

Note: Drive rotor from existing Drive Unit to be re-used.

Conversion Kit to be used when upgrading the -2 or -3 Gear motor to the -7 Drive Unit:

9636000497 MM338-7-DU CONVERSION KIT

Note: Drive rotor from existing Drive Unit to be re-used.

Not manufactured anymore

-6 and -7 versions

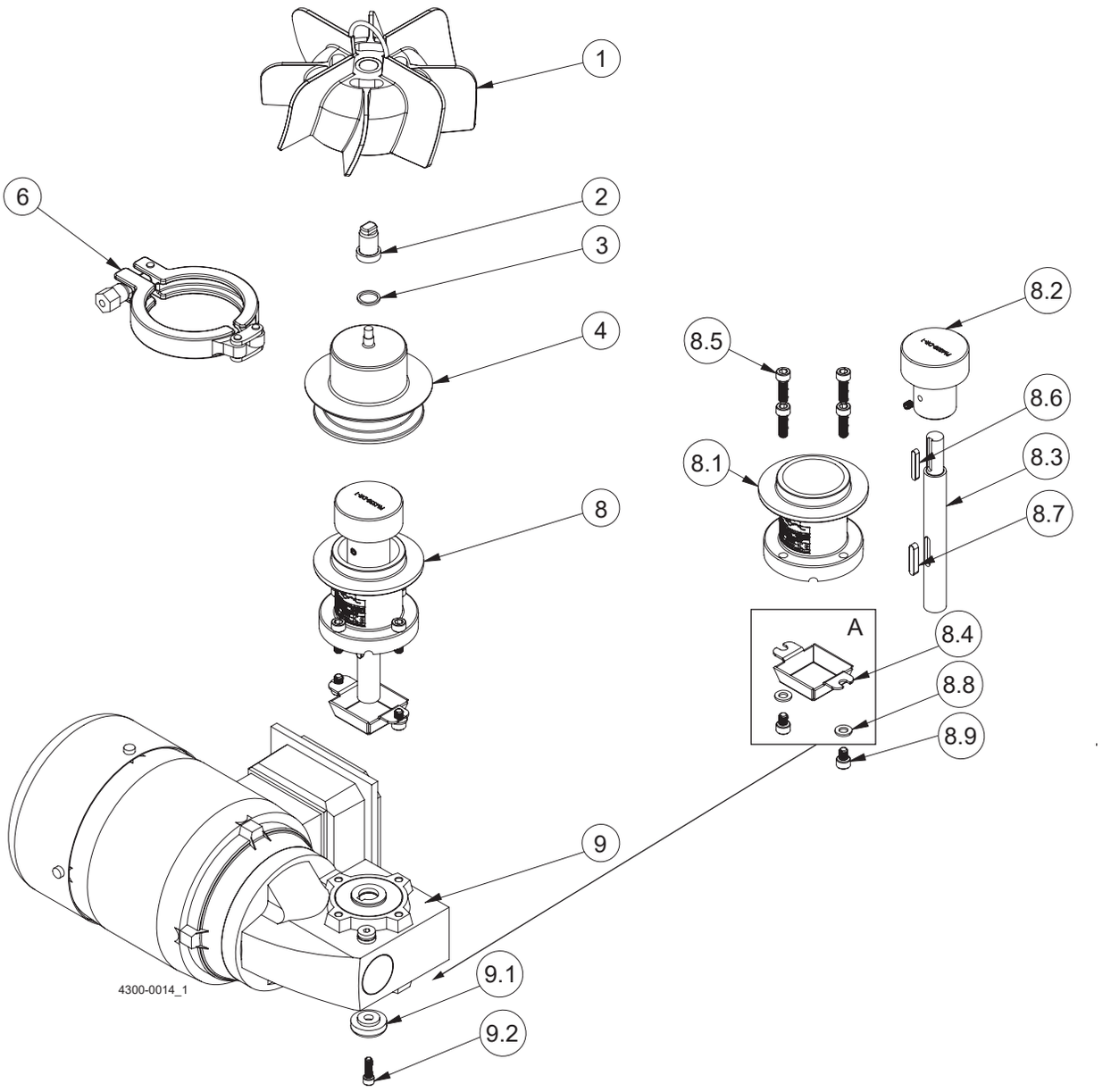

Pos. A: No fixing element cover = version 2 or 3

Parts list, Magnetic Mixer MM338
-6 and -7 versions

Pos		Qty	Denomination	Item no.	Size
1	□	-	IMP, PM338-4"-HSA IMPELLER, new (20 Ra max)	9634086378	4
	□	-	IMP, PM338-6"-HSA IMPELLER, new (20 Ra max)	9634086026	6
	□	-	IMP, PM338-4"-HSA-EP, new (20 Ra max plus Electro polish)	9634086513	4
	□	-	IMP, PM338-6"-HSA-EP, new (20 Ra max plus Electro polish)	9634086514	6
1*	□	-	MM338-IMPFB-REPAIR, R&R of female bearing	9634086486	All
	□	-	MM338-IMPFB-REPAIR-EP, R&R of female bearing +EP	9634089579	All
2		-	Male Bearing, YTZP (Zirconia Ceramic)	9634086107	
3		-	Male Bearing Gasket, ISOLAST® PerFluoro elastomer	9634086109	
4		-	Weld Plate, 316L Stainless Steel	9634086405	Accy**
6		-	Clamp	9634086467	2.5"
8	□	-	Drive unit kit, see table below		
8.1	□	-	DU flange, see table below		
8.2		-	Drive Rotor	9634086085	
8.3	□	-	Axle, see table below		
8.4	□	-	Fixing element guard, Stainless Steel	9634093420	
8.5		-	SHCS, Stainless Steel	9634093426	M6x20
8.6		-	Key, supplied with Axle	N/A	M4x25
8.7		-	Key, supplied with Axle	N/A	3/16x1
8.8		-	Washer, Stainless Steel		M6
8.9		-	SHCS, Stainless Steel		M6x8
9	□	-	Gear Motor code A, 3 X 230/460 VAC 60Hz	9634093414	0.5Hp
	□	-	Gear Motor code B, 3 X 332/575 VAC 60Hz	9634093416	0.5Hp
	□	-	Gear Motor code D, 3 X 230/400 VAC 50Hz	9634093418	0.5Hp
9.1		-	Fixing element, supplied with gear motor	N/A	
9.2		-	SHCS, supplied with gear motor	N/A	

Note*: Pos. 1 REPAIR: The impeller must be returned to Alfa Laval for repair. Please contact Customer Support.
Note**: Pos. 4: Accessory - not Spare part.

Version	Pos. 8 Drive unit kit	Pos. 8.1 DU flange	Pos. 8.3 Axle
-6, Stainless steel	9634093412	9634093288	9634093286
-7, extended version	9334093520	9634093287	9634093285

1.3 Identification of Magnetic Mixer version

All versions

The version of the Magnetic Mixer can be identified from the article number of the complete mixer.
We refer to order acknowledgement or delivery note on which the article number is stated.

Version 6 and 7

In addition to the article number, the version can also be identified from the description code on the plaque (example version 6):



Article number overview

Version 2 & 3

Version 2 Item numbers, complete mixer	Version 3 Item numbers, complete mixer
9614063809	9614063833
9614063810	9614063835
9614063813	(Extended flange)
9614063814	
9614063817	
9614063818	
9614063821	
9614063822	
9614063825	
9614063826	
9614063829	
9614063830	

Note:
- Serial # is stated on the impeller

Version 6 & 7

Version 6 Item numbers	Version 7 Item numbers
9614303401	9614307701
9614303402	(Extended flange)
9614303403	
9614303404	
9614303405	
9614303406	
9614303407	
9614303408	
9614303409	
9614303410	
9614303411	
9614303412	

Note:
- Serial # is stated on the plaque

Magnetic Mixer MM338

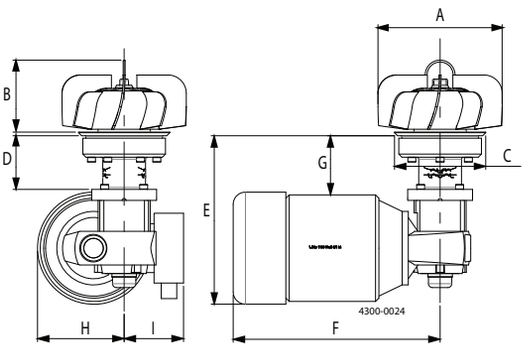

Version -2/-3

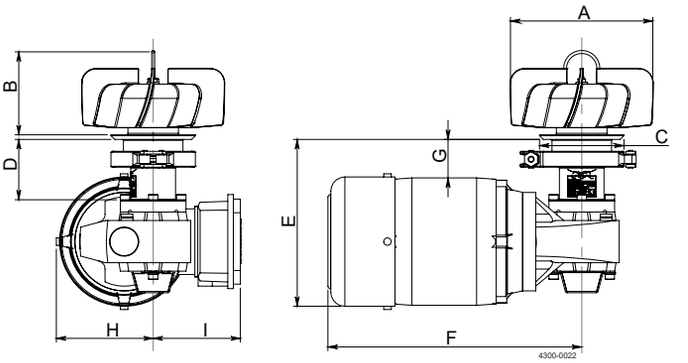

Version -6/-7

LeviMag® version WP50

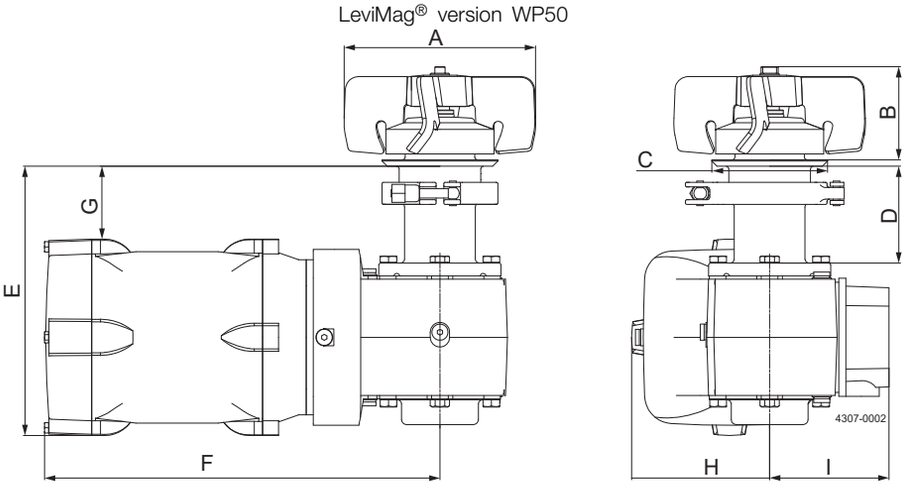

MM338 Old style weldplate with M6 thread	Upgrade Possibilities	Also Needed	Note about Driving Conditions	Method
New Impeller	WP50 Impeller	8010001710 SERVICE KIT MALE ULTRAPURE LeviMag® SIZE WP50 M6	The recommended maximum speeds in a fully baffled tank - mixing products with water like viscosity - are: 4" impeller: 350 RPM 6" impeller: 250 RPM	Buy Impeller Kit 8010002742 IMPELLER KIT ø100 or 8010002743 IMPELLER KIT ø150
New Impeller + *Drive Unit	WP50 Impeller + *Drive Unit WP50	8010001710 SERVICE KIT MALE ULTRAPURE LeviMag® SIZE WP50 M6	The recommended maximum speeds in a fully baffled tank - mixing products with water like viscosity - are:im 4" impeller: 350 RPM 6" impeller: 250 RPM	Buy Impeller Kit 8010002742 IMPELLER KIT ø100 or 8010002743 IMPELLER KIT ø150 + DU Kit and Gear Motor (Clean Room or Blue)
*New Drive Unit	*Drive Unit WP50		The recommended maximum speeds in a fully baffled tank - mixing products with water like viscosity - are:im 4" impeller: 350 RPM 6" impeller: 250 RPM	DU Kit and Gear Motor (Clean Room or Blue)

* Be sure to check measurement E and G difference between old Drive Unit and new Drive Unit to ensure the new one will fit your current solution. See underneath shown scheme.

Table 1. MM338-4

Type	Magnetic Mixer UltraPure, MMU				LeviMag®				LeviMag®	
Version	-2	-3	-6	-7	S (painted)	E (painted)	S (cl.room)	E (cl.room)	S (PREMIUM)	E (PREMIUM)
Dimension mm / inch	MM338-4	MM338-4	MM338-4	MM338-4	WP50 Ø100	WP50 Ø100	WP50 Ø100	WP50 Ø100	WP50 Ø100	WP50 Ø100
A	Ø102 / 4	Ø102 / 4	Ø102	Ø102	Ø100	Ø100	Ø100	ø100	Ø100	ø100
B	89 /3.5	89 /3.5	89	89	72	72	72	72	72	72
C	Ø90 / 3.54	Ø90 / 3.54	Ø90	Ø90	Ø89	Ø89	Ø89	Ø89	Ø89	Ø89
D	64 /2.5	114 / 4.5	64	114	75	125	75	125	75	125
E	254 /10	304 / 11.97	177	227	215	265	209	259	202	252
F	268 / 10.55	268 / 10.55	270	270	340	340	308	308	318	318
G	62.5 / 2.45	112.5 / 4.42	41	91	50	100	57	107	63	113
H	103.5 /4.07	103.5 /4.07	103,5	103.5	114	114	108	108	105	105
I	93 / 3.66	93 / 3.66	93	93	111	111	93	93	94	94

Table 2. MM338-6

Type	Magnetic Mixer UltraPure, MMU				LeviMag®				LeviMag®	
Version	-2	-3	-6	-7	S (painted)	E (painted)	S (cl.room)	E (cl.room)	S (PREMIUM)	E (PREMIUM)
Dimension mm / inch	MM338-6	MM338-6	MM338-6	MM338-6	WP50 Ø150	WP50 Ø150	WP50 Ø150	WP50 Ø150	WP50 Ø150	WP50 Ø150
A	Ø155 / 6	Ø155 / 6	Ø155	Ø155	Ø150	Ø150	Ø150	Ø150	Ø150	Ø150
B	89 / 3.5	89 / 3.5	89	89	72	72	72	72	72	72
C	Ø90 / 3.54	Ø90 / 3.54	Ø90	Ø90	Ø89	Ø89	Ø89	Ø89	Ø89	Ø89
D	64 / 2.5	114 / 4.5	64	114	75	125	75	125	75	125
E	254 / 10	304 / 11.97	177	227	215	265	209	259	202	252
F	268 / 10.55	268 / 10.55	270	270	340	340	308	308	318	318
G	62.5 / 2.45	112.5 / 4.42	41	91	50	100	57	107	63	113
H	103.5 / 4.07	103.5 / 4.07	103,5	103,5	114	114	108	108	105	105
I	93 / 3.66	93 / 3.66	93	93	111	111	93	93	94	94

Magnetic Mixer MM338

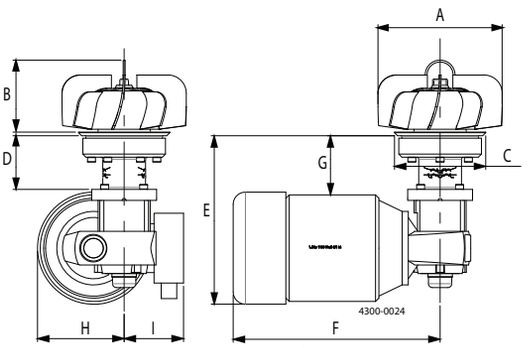

Version -2/-3

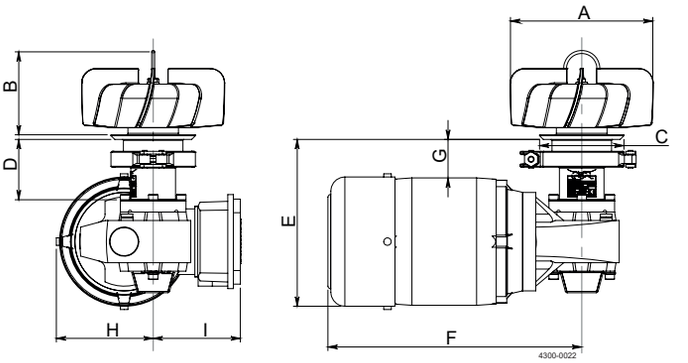

Version -6/-7

LeviMag® version WP50

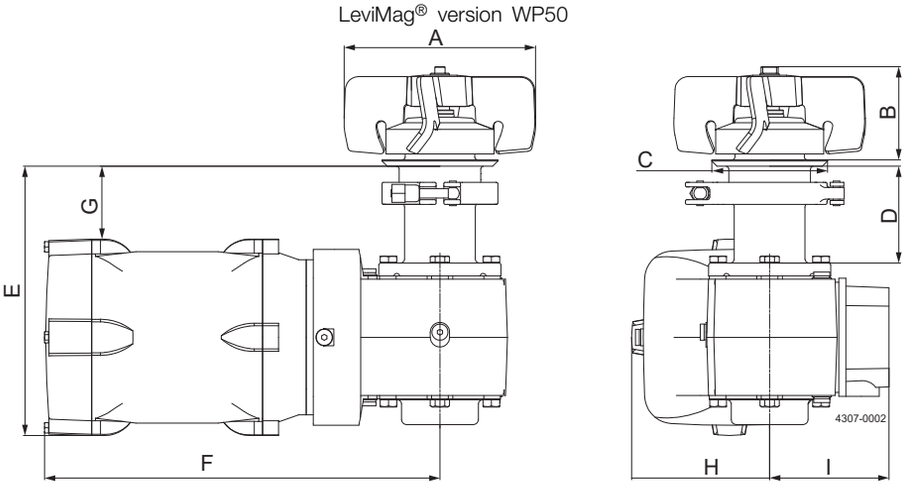

Table 3. Drive Unit Upgrade (DU kits) - WP50

WP50 Std. DU Kit	WP50 Ext. DU Kit
Item no.	*Item no.*
8010001747	8010001750

Table 4. Drive Unit Upgrade - Gear Motor

Size	Item no.	Description	Mounting Angle*	Gear Motor, Surface
WP50	9615456701	Nord SK930072.1ABH-80T1/4TF	0-22 deg	IE4, Blue RAL5010
WP50	9615456703	Nord SK930072.1ABH-80T1/4TF	23-45 deg	IE4, Blue RAL5010
WP50	9615456702	Nord SK930072.1ABH-80T1/4HMTTF	0-22 deg	IE4, Clean room
WP50	9615456704	Nord SK930072.1ABH-80T1/4HMTTF	23-45 deg	IE4, Clean room
WP50	9615488501	Nord SK930072.1ABH-71SP/4CUSTF	0-22 deg	PREMIUM, Blue RAL5010
WP50	9615488502	Nord SK930072.1ABH-71SP/4CUSTF	23-45 deg	PREMIUM, Blue RAL5010

*Please see the LeviMag® Instruction Manual for detailed information

Not manufactured anymore

-2 and -3 versions

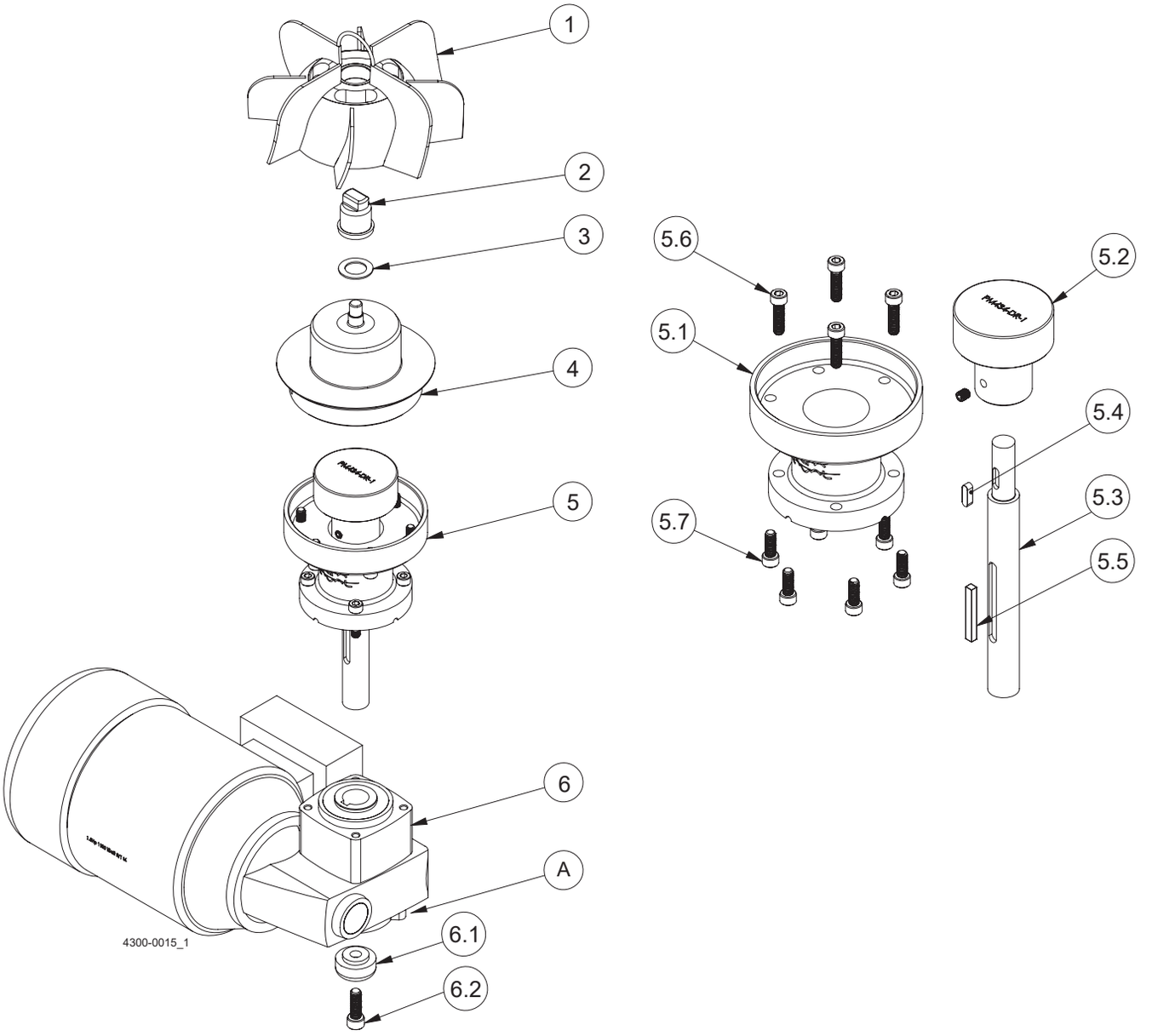

Pos. A: No fixing element cover = version 2 or 3

Parts list, Magnetic Mixer MM434
-2 and -3 versions

Pos		Qty	Denomination	Item no.	Size
1	□	-	IMP, PM4348"-HSA IMPELLER, new (20 Ra max)	9634086383	8
	□	-	IMP, PM43410"-HSA IMPELLER, new (20 Ra max)	9634086384	10
	□	-	IMP, PM4348"-HSA-EP, new (20 Ra max plus Electro polish)	9634086515	8
	□	-	IMP, PM43410"-HSA-EP, new (20 Ra max plus Electro polish)	9634086516	10
1*	□	-	MM434-IMPFB-REPAIR, Replacement of female bearing	9634086487	All
	□	-	MM434-IMPFB-REPAIR-EP, Replacement of female bearing +EP	9634089580	All
2		-	Male Bearing, YTZP (Zirconia Ceramic)	9634086143	
3		-	Male Bearing Gasket, ISOLAST® PerFluoro elastomer	9634086145	
4		-	Weld Plate, 316L Stainless Steel	9634086404	Accy**
5	□	-	Drive unit kit, See table below		
5.1	□	-	DU flange, See table below		
5.2		-	Drive Rotor	9634086129	
5.3	□	-	Axle, see table below		
5.4		-	Key	N/A	M6x20
5.5		-	Key, supplied with gear motor	N/A	M8x7x65
5.6		-	SHCS, Stainless Steel		M8x30
5.7		-	SHCS, Stainless Steel		M8x22
6	□	-	Gear Motor code A, 3 X 230/460 VAC 60Hz	9634086554	1.5Hp
	□	-	Gear Motor code B, 3 X 332/575 VAC 60Hz	9634086555	1.5Hp
	□	-	Gear Motor code C, 3 X 205/355 VAC 50Hz	9634086527	1.5Hp
	□	-	Gear Motor code D, 3 X 230/400 VAC 50Hz	9634086556	1.5Hp
6.1		-	Fixing Element, supplied with gear motor	N/A	
6.2		-	SHCS, supplied with gear motor	N/A	M10

Note*: Pos. 1 REPAIR: The impeller must be returned to Alfa Laval for repair. Please contact Customer Support.
Note**: Pos. 4: Accessory - not Spare part.

Version	Pos. 5 Drive unit kit	Pos. 5.1 DU flange	Pos. 5.3 Axle
-2, Stainless steel	9634086469	9634086432	9634086126
-3, extended version	9634086558	9634086562	9634086561

Conversion Kit to be used when upgrading the -2 or -3 Gear motor to the -6 Drive Unit:

9614452002 MM434-6-DU CONVERSION KIT

Note: Drive rotor from existing Drive Unit to be re-used.

Conversion Kit to be used when upgrading the -2 or -3 Gear motor to the -7 Drive Unit:

9636000498 MM434-7-DU CONVERSION KIT

Note: Drive rotor from existing Drive Unit to be re-used.

1.3

Not manufactured anymore

-6 and -7 versions

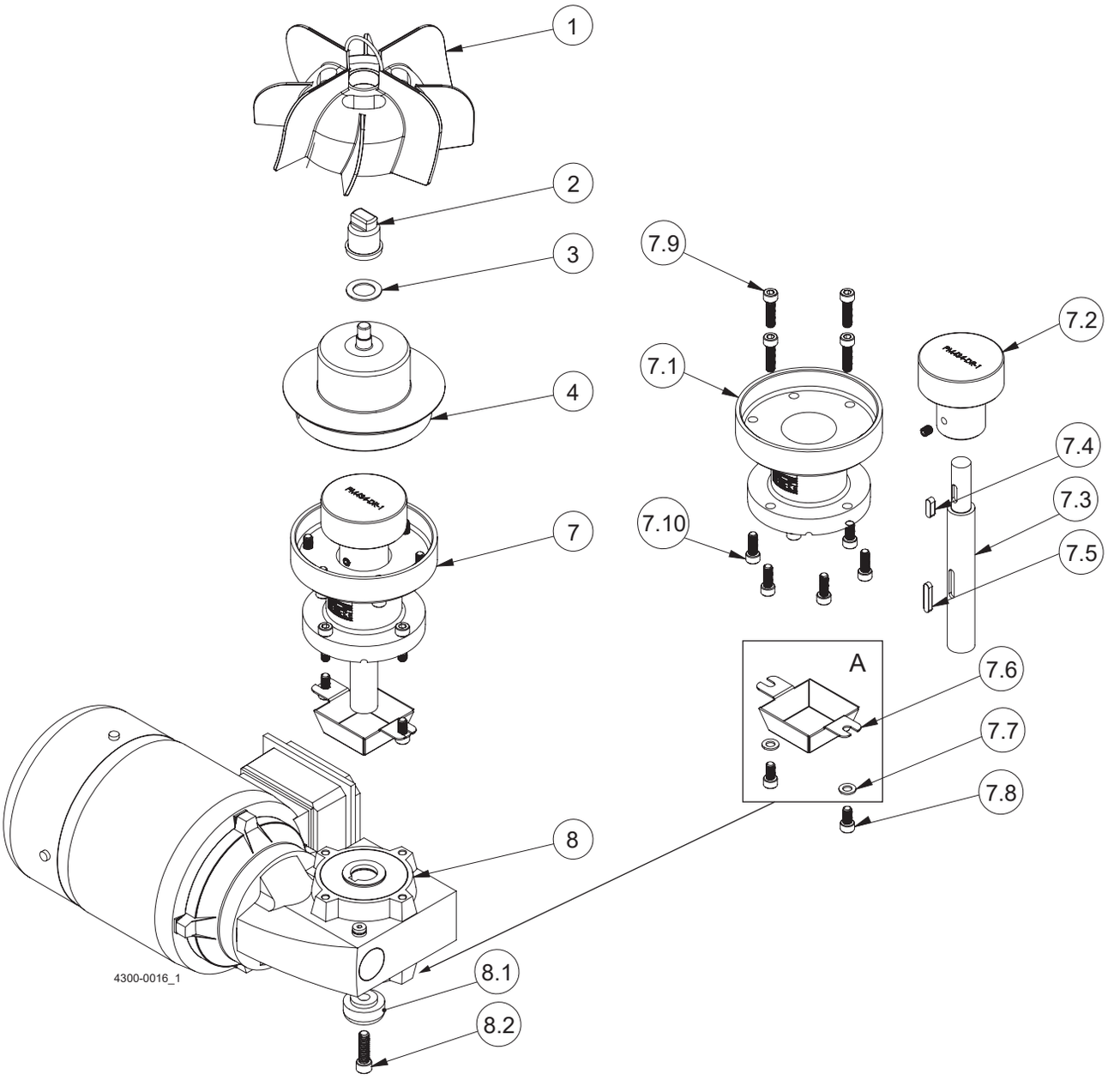

Pos. A: Fixing element cover = version 6 or 7

Parts List, Magnetic Mixer MM434
-6 and -7 versions

Pos		Qty	Denomination	Item no.	Size
1	□	-	IMP, PM4348"-HSA IMPELLER, new (20 Ra max)	9634086383	8
	□	-	IMP, PM43410"-HSA IMPELLER, new (20 Ra max)	9634086384	10
	□	-	IMP, PM4348"-HSA-EP, new (20 Ra max plus Electro polish)	9634086515	8
	□	-	IMP, PM43410"-HSA-EP, new (20 Ra max plus Electro polish)	9634086516	10
1*	□	-	MM434-IMPFB-REPAIR, Replacement of female bearing	9634086487	All
	□	-	MM434-IMPFB-REPAIR-EP, Replacement of female bearing +EP	9634089580	All
2		-	Male Bearing, YTZP (Zirconia Ceramic)	9634086143	
3		-	Male Bearing Gasket, ISOLAST® PerFluoro elastomer	9634086145	
4		-	Weld Plate, 316L Stainless Steel	9634086404	Accy**
7	□	-	Drive Unit Kit, see table below		
7.1	□	-	DU Flange, see table below		
7.2		-	Drive Rotor	9634086129	
7.3	□	-	Axle, see table below		
7.4		-	Key	N/A	M6x20
7.5		-	Key, supplied with gear motor	N/A	M8x7x65
7.6		-	Fixing element cover, Stainless Steel	9634093421	
7.7		-	Washer, Stainless Steel		M8
7.8		-	SHCS, Stainless Steel		M8x16
7.9		-	SHCS, Stainless Steel		M8x30
7.10		-	SHCS, Stainless Steel		M8x22
8	□	-	Gear Motor code A, 3 X 230/460 VAC 60Hz	9634093415	1.5Hp
	□	-	Gear Motor code B, 3 X 332/575 VAC 60Hz	9634093417	1.5Hp
	□	-	Gear Motor code D, 3 X 230/400 VAC 50Hz	9634093419	1.5Hp
8.1		-	Fixing Element, supplied with gear motor	N/A	
8.2		-	SHCS, supplied with gear motor	N/A	M10

Note*: Pos. 1 REPAIR: The impeller must be returned to Alfa Laval for repair. Please contact Customer Support.
Note**: Pos. 4: Accessory - not Spare part.

Version	Pos. 7 Drive unit kit	Pos. 7.1 DU flange	Pos. 7.3 Axle
-6, Stainless steel	9634093413	9634093282	9634093283
-7, extended version	9634093521	9634093284	9634093281

1.3 Identification of Magnetic Mixer version

All versions

The version of the Magnetic Mixer can be identified from the article number of the complete mixer.

We refer to order acknowledgement or delivery note on which the article number is stated.

Version 6 and 7

In addition to the article number, the version can also be identified from the description code on the plaque (example version 6):



Article number overview

Version 2 & 3

Version 2 Article numbers, complete mixer	Version 3 Article numbers, complete mixer
9614063913	9614063949
9614063914	(Extended flange)
9614063919	
9614063920	
9614063925	
9614063926	
9614063931	
9614063932	
9614063937	
9614063938	
9614063943	
9614063944	

Note:

- Serial # is stated on the impeller

Version 6 & 7

Version 6 Article numbers, complete mixer	Version 7 Article numbers, complete mixer
9614303501	9614307801
9614303502	9614343901
9614303503	(Extended flange)
9614303504	
9614303505	
9614303506	
9614303507	
9614303508	
9614303509	
9614303510	
9614303511	
9614303512	

Note:

- Serial # is stated on the plaque

Magnetic Mixer MM434

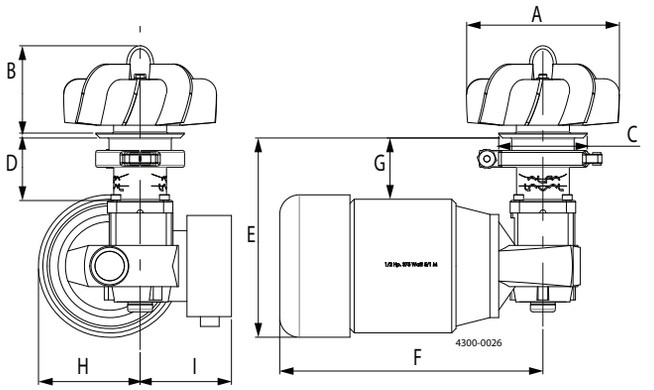

Version -2/-3

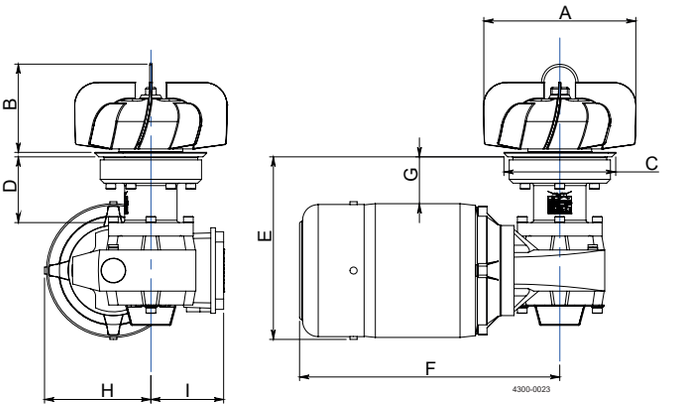

Version -6/-7

LeviMag® version WP81

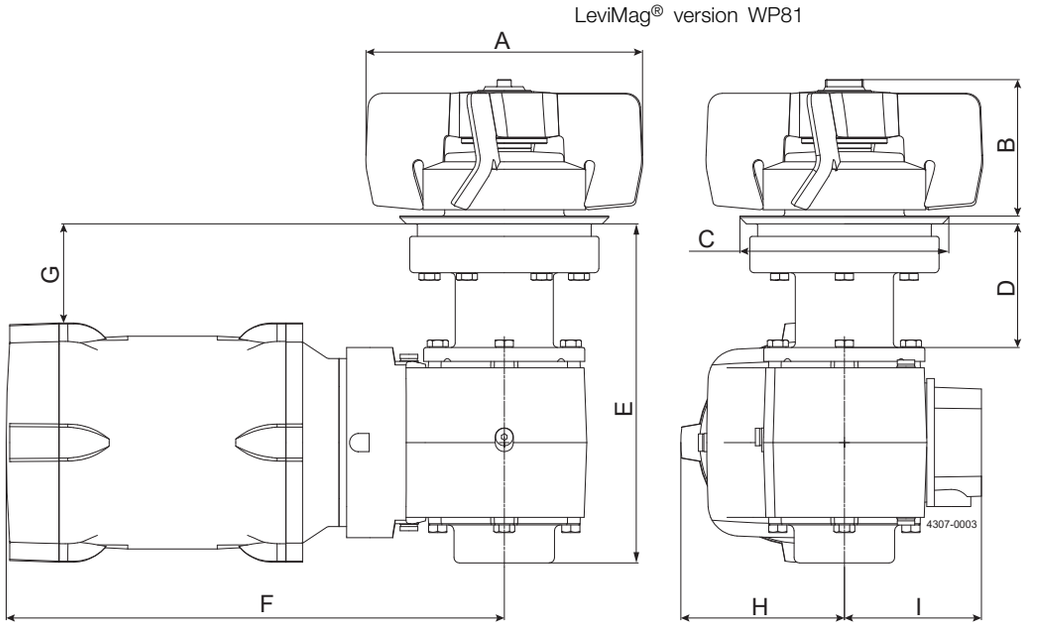

MM434	Upgrade Possibilities	Note about Driving Conditions	Method
New Impeller	WP81 Impeller	The recommended maximum speeds in a fully baffled tank - mixing products with water like viscosity - are: 8" impeller: 200 RPM 10" impeller: 185 RPM	Configure new LeviMag® without Weld Plate and Drive Unit
New Impeller + *Drive Unit	WP81 Impeller + *Drive Unit WP81	According to the Instruction Manual for LeviMag®	Configure new LeviMag® without Weld Plate
*New Drive Unit	*Drive Unit WP81	The recommended maximum speeds in a fully baffled tank - mixing products with water like viscosity - are: 8" impeller: 200 RPM 10" impeller: 185 RPM	DU Kit and Gear Motor (Clean Room or Blue)

* Be sure to check measurement E and G difference between old Drive Unit and new Drive Unit to ensure the new one will fit your current solution. See underneath shown scheme.

Table 1. MM434-8

Type	Magnetic Mixer UltraPure, MMU				LeviMag®				LeviMag®	
Version	-2	-3	-6	-7	S (painted)	E (painted)	S (cl.room)	E (cl.room)	S (PREMIUM)	E (PREMIUM)
Dimension mm / inch	MM434-8	MM434-8	MM434-8	MM434-8	WP81 Ø200	WP81 Ø200	WP81 Ø200	WP81 Ø200	WP81 Ø200	WP81 Ø200
A	Ø203 / 8	Ø203 / 8	Ø203	Ø203	Ø200	Ø200	Ø200	Ø200	Ø200	Ø200
B	118 / 4.63	118 / 4.63	118	118	98	98	98	98	98	98
C	Ø149 / 5.87	Ø149 / 5.87	Ø149	Ø149	Ø149	Ø149	Ø149	Ø149	Ø149	Ø149
D	88 / 3.5	138 / 5.4	87	137	89	139	89	139	89	139
E	331 / 13.0	381 / 15	243	293	243	293	243	293	243	293
F	338 / 13.3	338 / 13.3	347	347	354	354	357	357	354	354
G	96.6 / 3.8	146.60 / 5.77	62	112	74	124	70	120	78	128
H	141.5 / 5.57	141.5 / 5.57	141,5	141,5	114	114	117	117	110	110
I	97 / 3.81	97 / 3.81	97	97	111	111	98	98	112	112

Table 2. MM434-10

Type	Magnetic Mixer UltraPure, MMU				LeviMag®				LeviMag®	
Version	-2	-3	-6	-7	S (painted)	E (painted)	S (cl.room)	E (cl.room)	S (PREMIUM)	E (PREMIUM)
Dimension mm / inch	MM434-10	MM434-10	MM434-10	MM434-10	WP81 Ø250	WP81 Ø250	WP81 Ø250	WP81 Ø250	WP81 Ø200	WP81 Ø200
A	Ø254 / 10	Ø254 / 10	Ø254	Ø254	Ø250	Ø25	Ø250	Ø250	Ø200	Ø200
B	183 / 7.21	183 / 7.21	183	183	98	98	98	98	98	98
C	Ø149 / 5.87	Ø149 / 5.87	Ø149	Ø149	Ø149	Ø149	Ø149	Ø149	Ø149	Ø149
D	88 / 3.5	138 / 5.4	87	137	89	139	89	139	89	139
E	331 / 13.0	381 / 15	243	293	243	293	243	293	243	293
F	338 / 13.3	338 / 13.3	347	347	354	354	357	357	354	354
G	96.6 / 3.80	146.60 / 5.77	62	112	74	124	70	120	78	128
H	141.5 / 5.57	141.5 / 5.57	141,5	141,5	114	114	117	117	110	110
I	97 / 3.81	97 / 3.81	97	97	111	111	98	98	112	112

Magnetic Mixer MM434

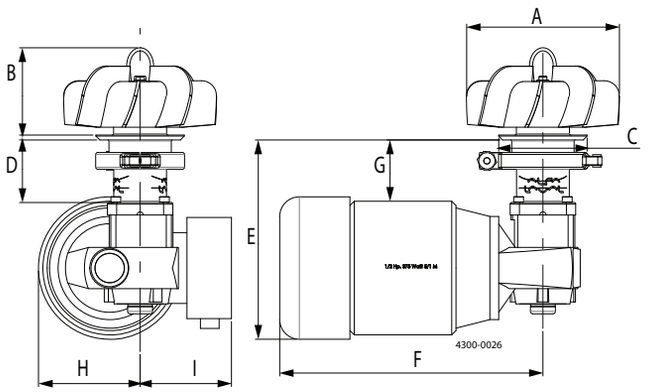

Version -2/-3

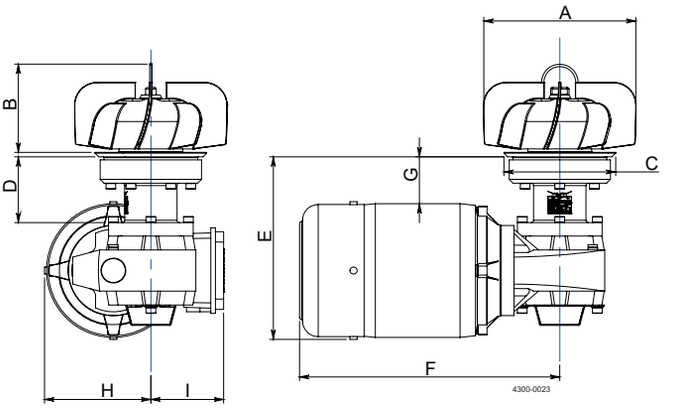

Version -6/-7

LeviMag® version WP81

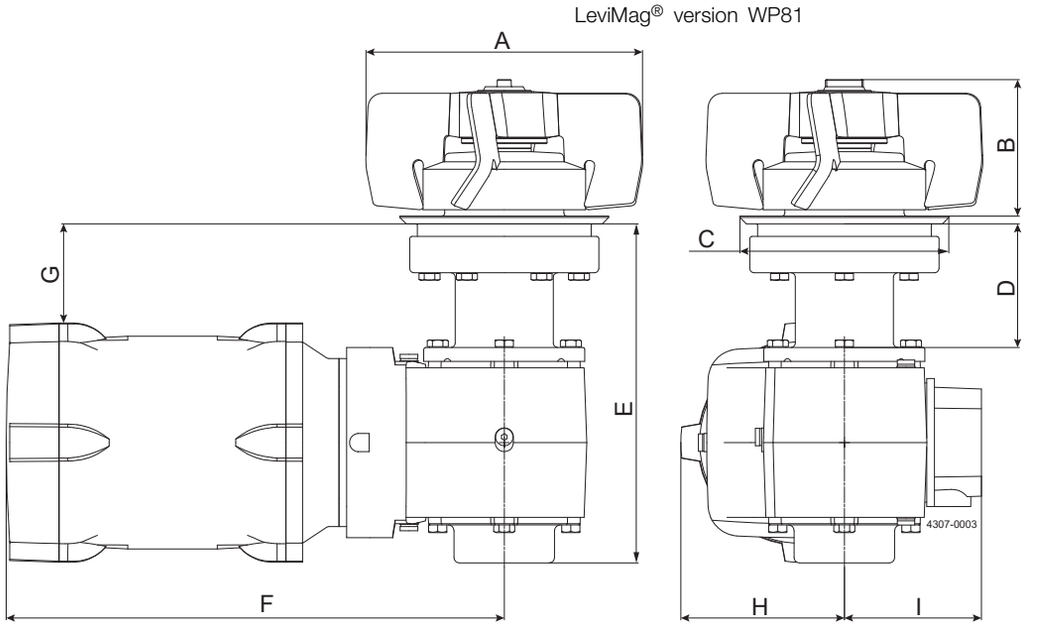

Table 3. MM434-12

Type	Magnetic Mixer UltraPure, MMU				LeviMag®				LeviMag®	
Version	-2	-3	-6	-7	S (painted)	E (painted)	S (cl.room)	E (cl.room)	S (PREMIUM)	E (PREMIUM)
Dimension mm / inch	MM434-12	MM434-12	MM434-12	MM434-12	WP81 Ø300	WP81 Ø300	WP81 Ø300	WP81 Ø300	WP81 Ø300	WP81 Ø300
A	Ø305 / 12	Ø305 / 12	Ø305	Ø305	Ø300	Ø300	Ø300	Ø300	Ø300	Ø300
B	183 / 7.21	183 / 7.21	183	183	98	98	98	98	98	98
C	Ø149 / 5.87	Ø149 / 5.87	Ø149	Ø149	Ø149	Ø149	Ø149	Ø149	Ø149	Ø149
D	88 / 3.5	138 / 5.4	87	137	89	139	89	139	89	139
E	331 / 13.0	381 / 15	243	293	243	293	243	293	243	293
F	338 / 13.3	338 / 13.3	347	347	354	354	357	357	354	354
G	96.6 / 3.8	146.60 / 5.77	62	112	74	124	70	120	78	128
H	141.5 / 5.57	141.5 / 5.57	141,5	141,5	114	114	117	117	110	110
I	97 / 3.81	97 / 3.81	97	97	111	111	98	98	112	112

Table 4. Drive Unit Upgrade (DU kits) - WP81

WP81 Std. DU Kit	WP81 Ext. DU Kit
Item no.	*Item no.*
8010001749	8010001751

Table 5. Drive Unit Upgrade - Gear Motor

Size	Item no.	Description	Mounting Angle*	Gear Motor, Surface
WP81	9615435101	Nord SK93072.1ABH-80T1/4TF	0-22 deg	IE4, Blue RAL5010
WP81	9615435103	Nord SK93072.1ABH-80T1/4TF	23-45 deg	IE4, Blue RAL5010
WP81	9615435102	Nord SK93072.1ABH-90T3/4HMTTF	0-22 deg	IE4, Clean room
WP81	9615435104	Nord SK93072.1ABH-90T3/4HMTTF	23-45 deg	IE4, Clean room
WP81	9615488601	Nord SK93072.1ABH-80LP/4CUSTF	0-22 deg	PREMIUM, Blue RAL5010
WP81	9615488602	Nord SK93072.1ABH-80LP/4CUSTF	23-45 deg	PREMIUM, Blue RAL5010

*Please see the LeviMag® Instruction Manual for detailed information

Not manufactured anymore

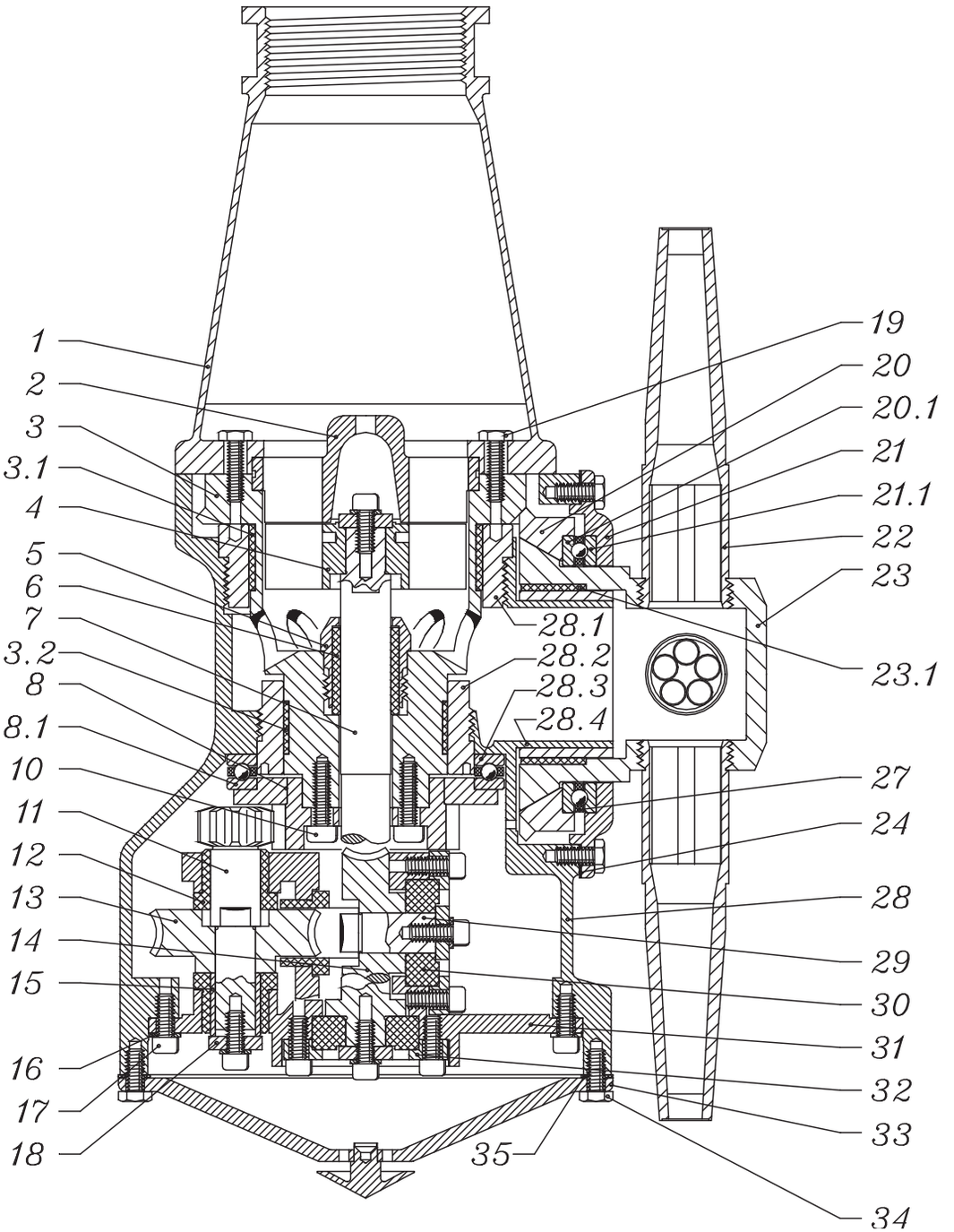

Pos		Qty	Denomination	Item no.	Material	Remark
Rotary Jet Mixer IM 20 with 4 nozzles						
Machine design obsolete December 29, 2010 - serial numbers below 1012-002						
1	□	1	Top cone, 2" BSP	TE22D500	Stainless steel	Spare part
	□	1	Top cone, 2" NPT	TE22D501	Stainless steel	Spare part
2	□	1	Guide, 100%	TE603	Stainless steel	Spare part
	□	1	Guide ring, 0%	TE1030	Stainless steel	Spare part
3		1	Stem w. liners	TE604Z	Stainless steel /Polymer	Spare part
3.1		1	Top liner	TE9041[2)]	Polymer	Spare part
3.2		1	Bottom liner	TEB6042[2)]	Polymer	Spare part
4		1	Impeller, 100%	TE32B508	Stainless steel	Spare part
5		1	Gland	TE608Z	Stainless steel	Spare part
6	✪	1	Main bush	TE22B576	Polymer	Wear part
7	✪	1	Turbine shaft	TE32B511	Stainless steel	Wear part
8		1	Gear wheel w. ball race	TE32B303	Stainless steel	Spare part
8.1	✪	1	Ball race	TE32B510	Stainless steel	Wear part
10		6	Screw	TE120	Stainless steel	Spare part
11		1	Pinion	TE114	Stainless steel	Spare part
12	✪	3	Collar bush	TE22A586	Polymer	Wear part
13	✪	1	Worm wheel w. reinforcement	TE22A365	Polymer/Stainless steel	Wear part
14	✪	1	Worm wheel w. reinforcement	TE22A365	Polymer/Stainless steel	Wear part
15		1	Journal	TE117	Stainless steel	Spare part
16		9	Spring washer	TE156	Stainless steel	Spare part
17		17	Screw	TE118	Stainless steel	Spare part
18		4	Washer	TE619A	Stainless steel	Spare part
19		8	Screw	TE902H	Stainless steel	Spare part
20		1	Bevel gear with ball race	TE32B307	Stainless steel	Spare part
20.1	✪	1	Ball race	TE32B510	Stainless steel	Wear part
21		1	Hub cover with ball race	TE32B306	Stainless steel	Spare part
21.1	✪	1	Ball race	TE32B510	Stainless steel	Wear part
22	□	4	Nozzle, ø8	TE50B008	Stainless steel	Spare part
	□	4	Nozzle, ø9	TE50B009	Stainless steel	Spare part
	□	4	Nozzle, ø10	TE50B010	Stainless steel	Spare part
23		1	Hub w. liner	TE6244KZ	Stainless steel	Spare part
23.1		1	Hub liner	TE62411[2)]	Polymer	Wear part
24		1	Hub gasket	TE22D553	Polymer/elastomer	Spare part
27	✪	2	Ball retainer with balls	TE32B302	Polymer/ceramics	Wear part
28		1	Body with bearings[1]		Stainless steel	N/A
28.1		1	Main collar upper	TE127Z1	Stainless steel	Wear part
28.2		1	Main collar lower	TE127Z2	Stainless steel	Wear part
28.3	✪	1	Ball race	TE32B510	Stainless steel	Wear part
28.4		1	Hub collar	TE1273	Stainless steel	Wear part
29	✪	1	Horizontal shaft	TE128Z	Stainless steel	Wear part
30	✪	2	Slide bearing	TE22A571	Polymer	Wear part
31		1	Gear frame	TE630	Stainless steel	Spare part
32		2	Bearing cover	TE531	Stainless steel	Spare part
33		1	Bottom cover, compl.	TE22D350	Stainless steel	Spare part
34		12	Screw	TE421H	Stainless steel	Spare part
35		1	Bottom gasket	TE22D554	Polymer/elastomer	Spare part

Service kits

✪	**Service Kit - machines delivered before December 29, 2010**	**9614462201**

Parts marked with μ are included in the Service Kit 9614462201

[1)] Pos. 28 is not sold as single spare part component. Only sold as part of a machine maintenance/repair order. For further information please contact Alfa Laval Customer Support.

[2)] If blue liners on Stem or blue liner on Hub are extremely worn, they can be replaced. This part requires that a precise procedure is followed to accomplish installation. It is highly recommended that an Authorized Alfa Laval Service Partner perform the replacement when necessary. Alternatively, it is possible to buy both Stem with liner and Hub with liner mounted.

□ Configuration according to delivery note/order.

1.4 Wall mounted cleaning nozzles

Alfa Laval's wall mounted cleaning nozzles ensures 100% cleaning coverage in tanks no matter which top-mounted tank cleaning device it is paired with This cleaning nozzle, installed flush with tank wall or bottom, cleans underneath agitator blades, coils and other hard-to-reach areas.



Spare parts

PlusClean® & PlusClean®UltraPure - media driven 1.4.322

PlusClean® & PlusClean®UltraPure - pneumatic driven 1.4.324

Tools

PlusClean® & PlusClean®UltraPure 1.4.326

1.4

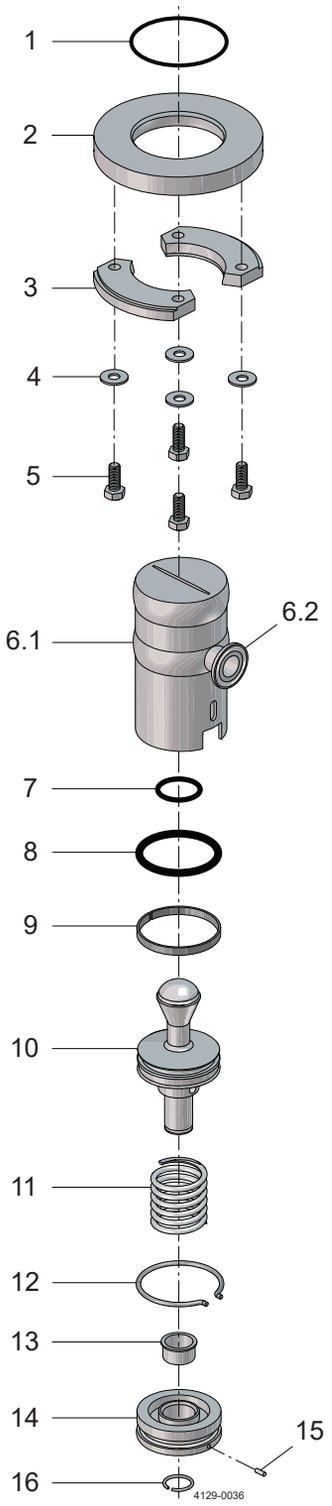

Pos		Qty	Denomination	Item no.
1	◆	1	O-ring, FEP - Adjustable weld plate	8010000495
	○	1	O-ring, FEP - Fixed weld plate	8010000496
2		1	Weld plate, Adjustable	8010000481
		1	Weld plate, Fixed	8010000482
3		2	Locking ring, Adjustable weld plate	8010000483
		2	Locking ring, Fixed weld plate	8010000484
4		4	Washer	TE2601000349
5		4	Screw, M8x1.25	TE2601000389
6.1		1	Body, with Offset Slot and DN15 inlet*	On request
		1	Body, with Wide Center Slot and DN15 inlet*	On request
		1	Body, with Narrow Center Slot and DN15 inlet*	On request
		1	Body, with Offset Slot and 3/4"ASME inlet*	On request
		1	Body, with Wide Center Slot and 3/4"ASME inlet*	On request
		1	Body, with Narrow Center Slot and 3/4"ASME inlet*	On request
6.2		1	Inlet	
7	◆○	1	O-ring, FEP	
8	◆○	1	O-ring, EPDM	
9	◆○	1	Guide ring, PTFE	
10		1	Piston,	8010000479
		1	Piston, UltraPure	8010001108
11		1	Spring	9612938202
12		1	Retaining ring	8010000498
13		1	Bushing	9613125002
14		1	End plate	8010000480
15		1	Positioning pin	TE2601000350
16		1	Retaining ring	9615477201

* Also available in UltraPure upon request.

	Item no.
Service kit	
Standard service kit for adjustable weldplate	8010000995
Service kit for adjustable weldplate UltraPure (Q-doc)	8010000996
Standard service kit for fixed weldplate	8010019194
Service kit for fixed weldplate UltraPure (Q-doc)	8010019195

Parts marked with ◆ are included in the service kits for adjustable weldplate 8010000995 and 8010000996
Parts marked with O are included in the service kits for fixed weldplate 8010019194 and 8010019195

1.4

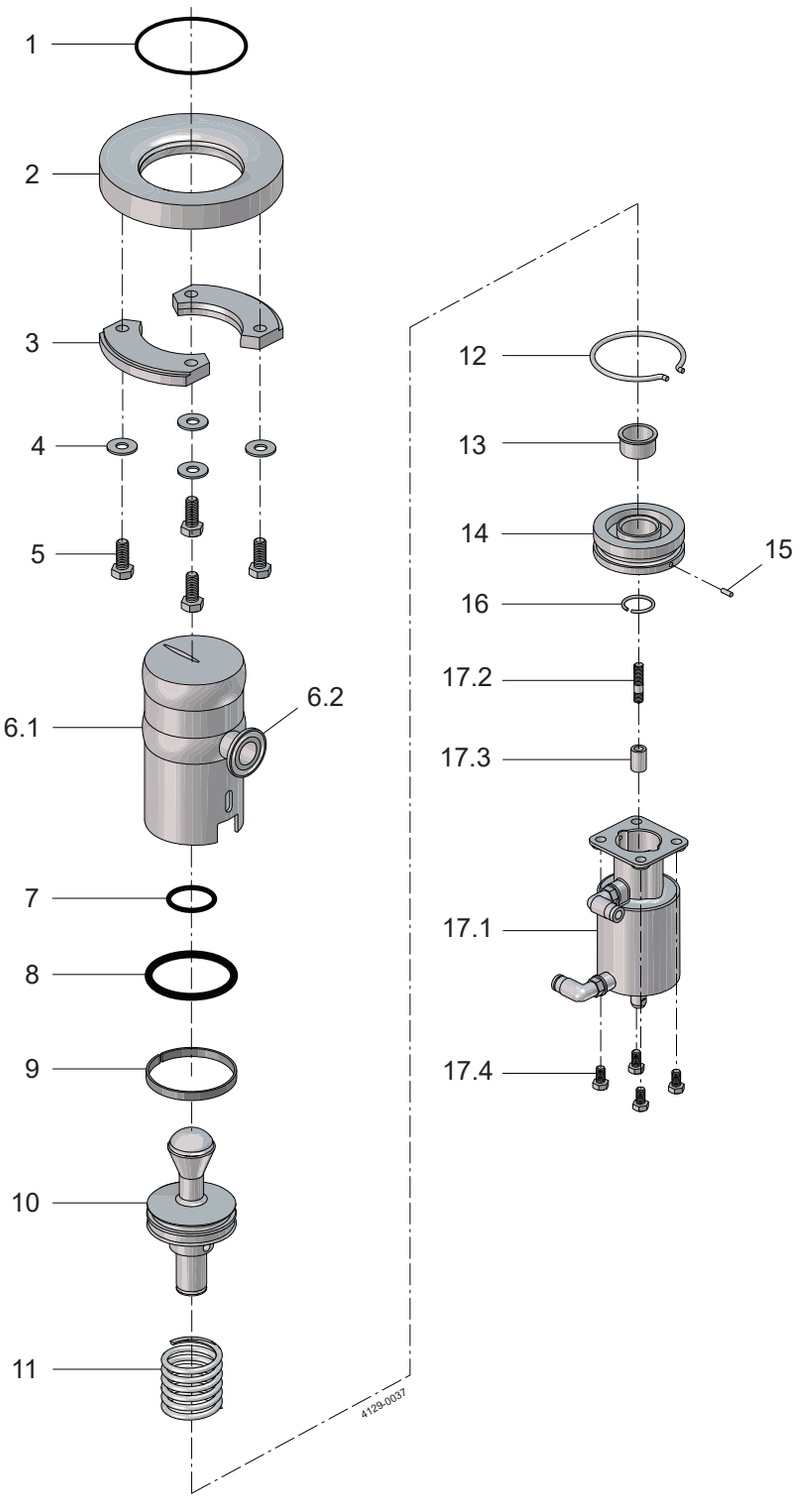

Pos		Qty	Denomination	Item no.
1	◆	1	O-ring, FEP - Adjustable weld plate	8010000495
	○	1	O-ring, FEP - Fixed weld plate	8010000496
2		1	Weld plate, Adjustable	8010000481
		1	Weld plate, Fixed	8010000482
3		2	Locking ring, Adjustable weld plate	8010000483
		2	Locking ring, Fixed weld plate	8010000484
4		4	Washer	TE2601000349
5		4	Screw, M8x1.25	TE2601000389
6.1		1	Body, with Offset Slot and DN15 inlet*	On request
		1	Body, with Wide Center Slot and DN15 inlet*	On request
		1	Body, with Narrow Center Slot and DN15 inlet*	On request
		1	Body, with Offset Slot and 3/4"ASME inlet*	On request
		1	Body, with Wide Center Slot and 3/4"ASME inlet*	On request
		1	Body, with Narrow Center Slot and 3/4"ASME inlet*	On request
6.2		1	Inlet	
7	◆○	1	O-ring, FEP	
8	◆○	1	O-ring, EPDM	
9	◆○	1	Guide ring, PTFE	
10		1	Piston,	8010000479
		1	Piston, UltraPure	8010001108
11		1	Spring	9612938202
12		1	Retaining ring	8010000498
13		1	Bushing	9613125002
14		1	End plate	8010000480
15		1	Positioning pin	TE2601000350
16		1	Retaining ring	9615477201
17.1		1	PlusClean Actuator, complete	8010003107
17.2		1	Connecting stud	
17.3		1	Actuator spacer	
17.4		4	Screw	

* Also available in UltraPure upon request.

Service kit	Item no.
Standard service kit for adjustable weldplate	8010000995
Service kit for adjustable weldplate UltraPure (Q-doc)	8010000996
Standard service kit for fixed weldplate	8010019194
Service kit for fixed weldplate UltraPure (Q-doc)	8010019195

Parts marked with ◆ are included in the service kits for adjustable weldplate 8010000995 and 8010000996
Parts marked with O are included in the service kits for fixed weldplate 8010019194 and 8010019195

1.4

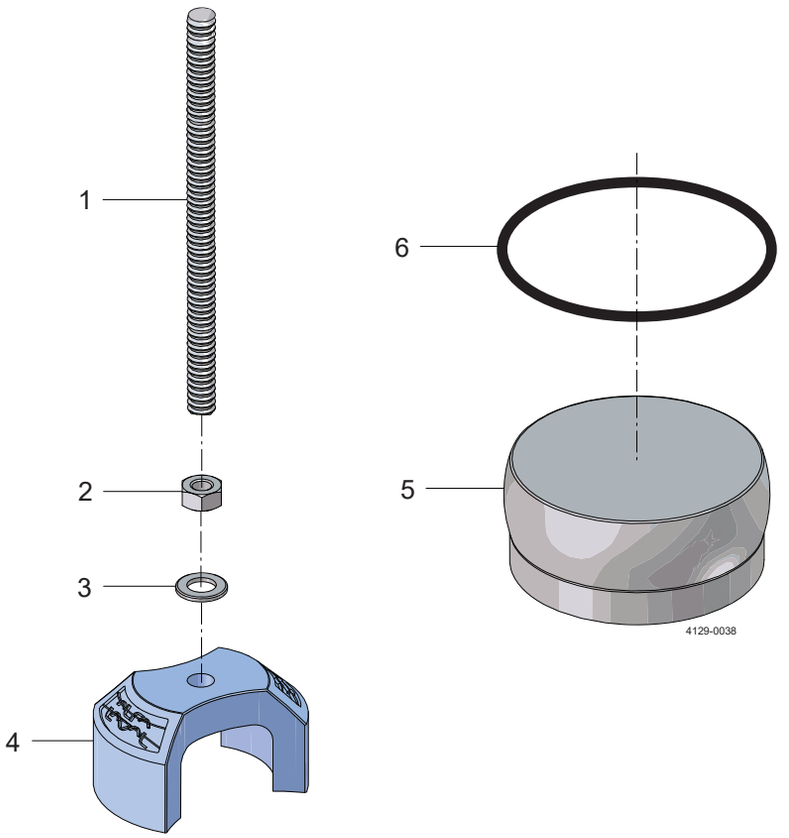

Pos		Qty	Denomination	Item no.
1	□	1	Screw, (M6x1)	
2	□	1	Nut	
3	□	1	Washer	
4	□	1	Spring mounting tool	
5	♦○	1	Blind cap	
6	♦	1	O-ring, FEP - Adjustable weld plate	
	○	1	O-ring, FEP - Fixed weld plate	

		Item no.
Tool kits		
□	**Spring tool kit**	8010001093
♦	**Blind cap tool kit for adjustable weld plate**	8010003082
○	**Blind cap tool kit for fixed weld plate**	8010003083

Parts marked with □♦○ are included in the tool kits.

1.5 Rotary jet heads

Alfa Laval's comprehensive range of cleaning devices guarantees impact, making the most economical use of energy, manpower and cleaning solutions.



Spare parts

Toftejorg TZ-89 . . . . . 1.5.330
Toftejorg TZ-89LF 1.5.334
Toftejorg SaniJet 20, media driven 1.5.338
Toftejorg SaniJet 20, air driven 1.5.347
Toftejorg TJ20G 1.5.360
Toftejorg SaniJet 25 . . . . . 1.5.374
Toftejorg TJ40G & TJ40G-HD 1.5.386
Toftejorg MultiJet 25 . . . . . 1.5.394
Toftejorg TZ-750, portable 1.5.398
Toftejorg TZ-750, fixed 1.5.406

Service tools for obsolete spare parts

Tool set for ALjet Rotary Jet Head 1.5.414

Spare parts for obsolete products

ALjet Rotary Jet Head 1.5.416
LKTA Cleaning Turbine 1.5.420
LKTB Cleaning Turbine 1.5.422
Toftejorg SaniJet 20, electrically driven 1.5.424
Toftejorg SaniJet 20, media driven, TE20Xxxx 1.5.430
Toftejorg SaniJet 20, air driven, TE20Xxxx 1.5.440
Toftejorg TJ20G, old design 1.5.447
Toftejorg TJ40G, serial nos. up to 2021-01137 . . . . . 1.5.450
MultiJet 40, old design 1.5.462
Toftejorg MultiJet 40 . . . . . 1.5.466
Toftejorg MultiJet 50 . . . . . 1.5.474
Toftejorg MultiJet 65 . . . . . 1.5.482
Toftejorg TZ-66 . . . . . 1.5.492
Toftejorg TZ-67 (2022) 1.5.500
Toftejorg TZ-67 . . . . . 1.5.506
Toftejorg TZ-74 . . . . . 1.5.508
Toftejorg TZ-74 brew kettle 1.5.510
Toftejorg TZ-74 self cleaning version 1.5.512
Toftejorg TZ-79 . . . . . 1.5.514

1.5

Main unit

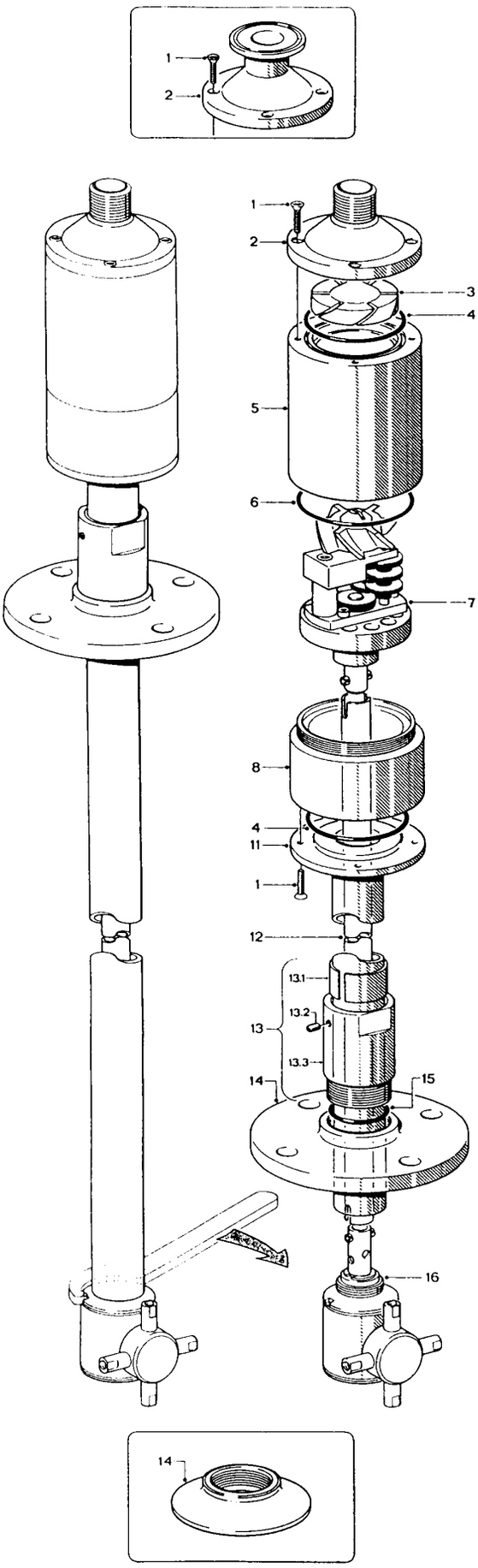

Gear box

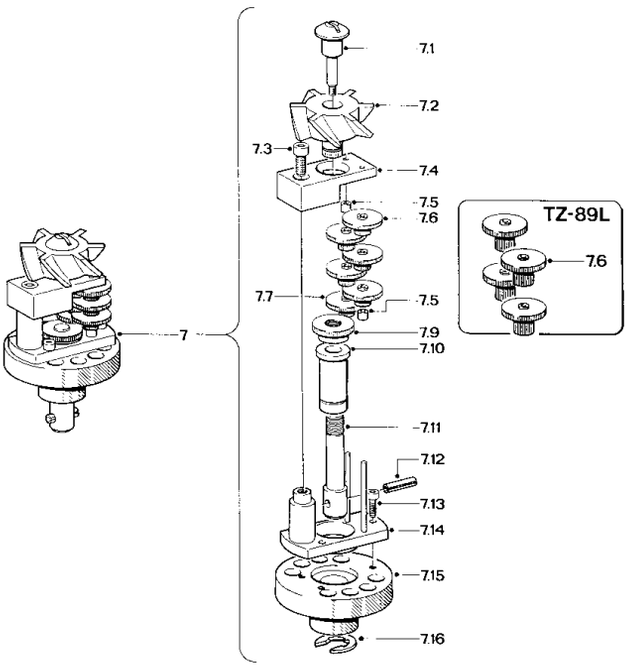

Cleaner head

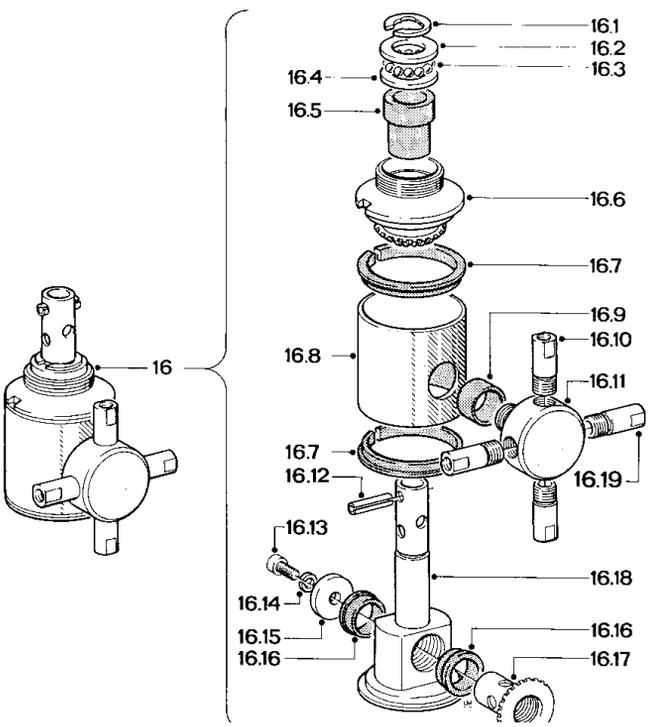

Reference List of Parts, Alfa Laval Toftejorg TZ-89

Pos		Qty	Denomination	Item no.	Remark
1		4	Screw	TE51A050	Spare part
2	❑	1	Connection nipple 3/4" BSP	TE20A505	Spare part
	❑	1	Connection nipple 3/4" NPT	TE20A506	Spare part
	❑	1	1" Clamp connection	TE20A500	Spare part
3	❑	1	Guide	TE20A520	Spare part
	❑	1	Guide, polymer	TE20A52001	Spare part
4		2	O-ring	TE51T034	Spare part
5		1	Gear house		*Note
6		1	O-ring	TE51T036	Spare part
7		1	Gear unit complete	TE20A307	Spare part
7.1		1	Turbine shaft	TE20A530	Wear part
7.2	❑	1	Turbine wheel	TE20A525	Wear part
	❑	1	Turbine wheel, polymer	TE20A52501	Wear part
7.3		1	Screw	TE51A102	Spare part
7.4		1	Traverse	TE20A535	Spare part
7.5		2	Distance bush	TE20A555	Spare part
7.6		5	Gear wheel, polymer	TE20A562	Wear part
7.7		1	Gear wheel	TE20A310	Wear part
7.9		1	Traction wheel	TE20A566	Wear part
7.10		1	Bearing bush	TE20A577	Wear part
7.11		1	Drive shaft	TE20A571	Wear part
7.12		1	Tubular rivet	TE51C050	Wear part
7.13		3	Screw	TE51A101	Spare part
7.14		1	Gear frame	TE20A305	Wear part
7.15		1	Bearing plate	TE20A580	Spare part
7.16			See pos. 16.1	TE51C200	Wear part
8		1	Gear house lower part	TE20A515	Spare part
11		1	Centre tube	TE20A587/592	Spare part
12		1	Driver tube	TE20A581/586	Spare part
13		1	Flange guide	TE20A320	Spare part
13.1		1	Split bushing	TE20A602	Spare part
13.2		1	Pointed screw	TE51A011	Spare part
14	❑	1	Flange 50	TE20A605	Spare part
	❑	1	Flange 3"	TE20A607	Spare part
	❑	1	3" Clamp flange	TE20A608	Spare part
15		1	O-ring	TE51T022	Spare part
16		1	Cleaner head complete	TE20A300	Spare part
16.1		2	Circlip	TE51C200	Wear part
16.2		1	Bearing washer, upper	TE20A616	Wear part
16.3		12	Ball	TE1262	Wear part
16.4		1	Bearing washer, lower	TE20A617	Wear part
16.5		1	Bush for stator	TE20A623	Wear part
16.6		1	Stator	TE20A626	Spare part
16.7		2	Bush	TE20A630	Wear part
16.8		1	Sleeve	TE20A635	Spare part
16.9		1	Bush	TE20A622	Wear part
16.10		4	Nozzle	TE20A655	Spare part
16.11		1	Nozzle head	TE20A650	Spare part
16.12		1	Tubular rivet	TE51C050	Wear part
16.13		1	Screw	TE51A100	Wear part
16.14		1	Spring washer	TE156	Wear part
16.15		1	Washer	TE20A640	Wear part
16.16		2	Collar bush	TE20A621	Wear part
16.17		1	Rotor	TE20A645	Wear part
16.18		1	Shaft for Cleaner head	TE20A610	Wear part

❑ Configuration according to delivery note/order

*Note: Pos. 5 is not sold as single spare part component but only as part of a machine maintenance/repair order. For further information please contact Alfa Laval Customer Support.

1.5

Main unit

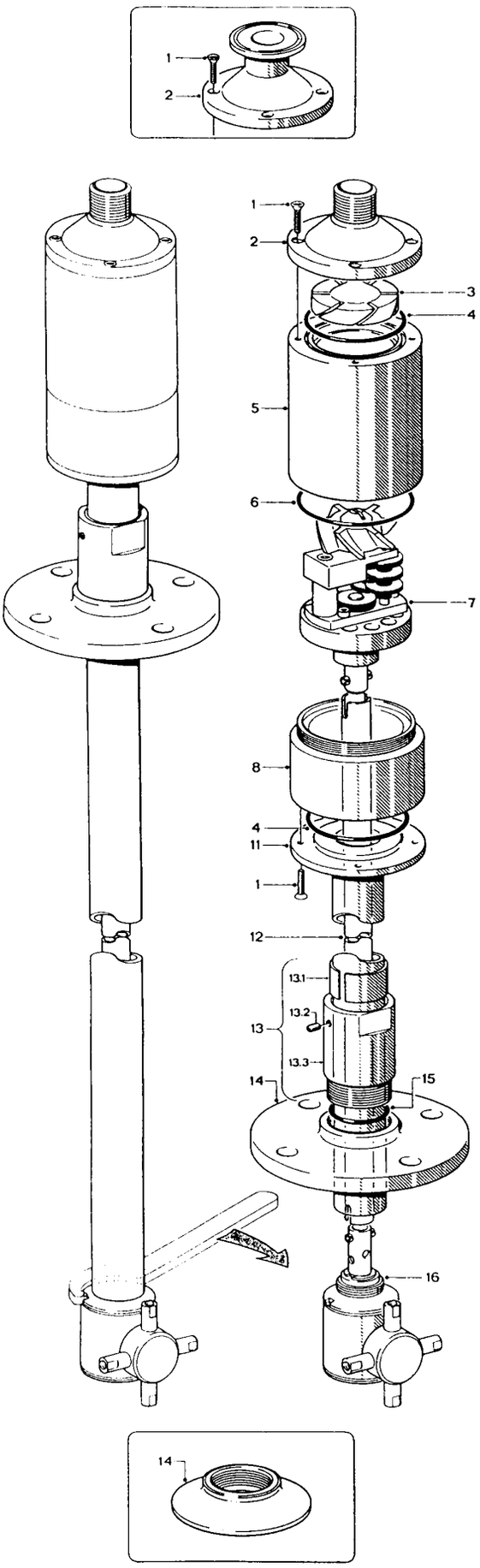

Gear box

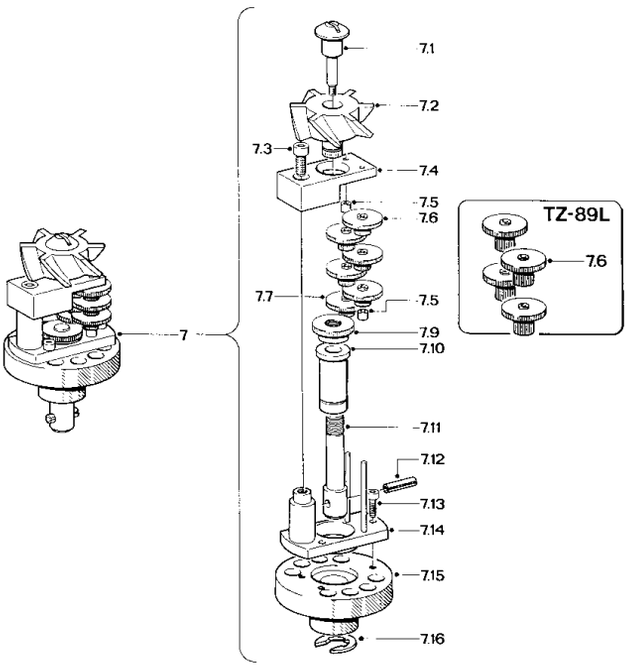

Cleaner head

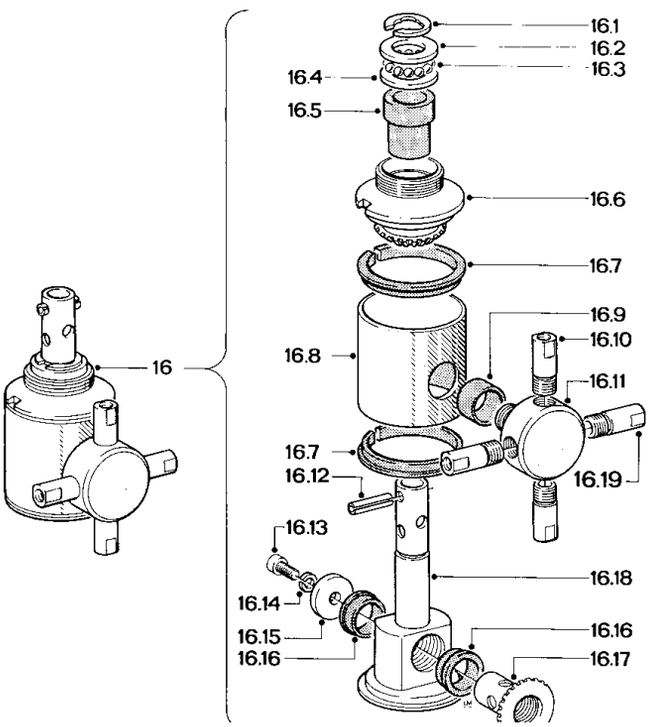

Service intervals

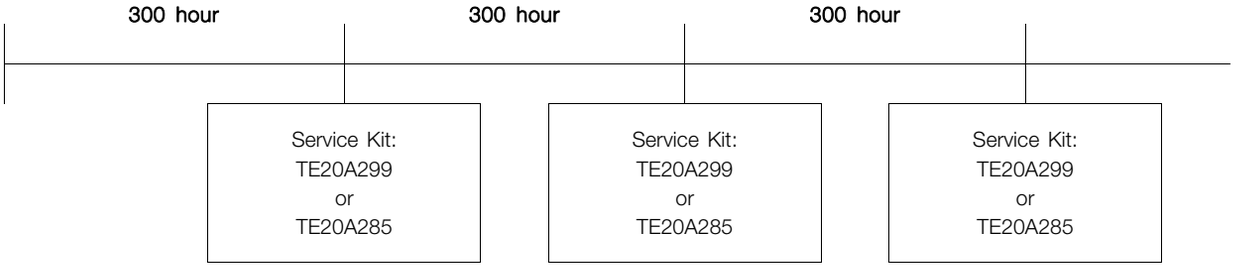

Pos	Qty	Denomination	Item no.
		Service Kit for Alfa Laval Toftejorg TZ-89	TE20A299
Consisting of:			
4	2	O-ring, FEP/Silicone	TE51T034
6	1	O-ring, FEP/Silicone	TE51T036
15	1	O-ring, FEP/Silicone	TE51T022
7.6	5	Gear wheel, PEEK 450G	TE20A562
16.2	1	Bearing washer, upper	TE20A616
16.4	1	Bearing washer, lower	TE20A617

Pos	Qty	Denomination	Item no.
		Service Kit for Alfa Laval Toftejorg TZ-89	TE20A285
Consisting of:			
16.3	12	Ball for Thrust bearing	TE1262
7.6	5	Gear wheel	TE20A562
16.2	1	Bearing washer, upper	TE20A616
16.4	1	Bearing washer, lower	TE20A617
16.16	2	Collar bush	TE20A621
16.9	1	Bush	TE20A622
16.5	1	Bush for Stator	TE20A623
16.7	2	Bush	TE20A630
1	8	Screw	TE51A050
4	2	O-ring	TE51T034
6	1	O-ring, FEP/Silicone	TE51T036
15	1	O-ring, FEP/Silicone	TE51T022

Tools for Alfa Laval Toftejorg TZ-89/TZ-89L

Pos	Qty	Denomination	Item no.
		Hook-spanner	TE81B039
		Spanner	
		Hex key for Allen Screw	

1.5

Main unit

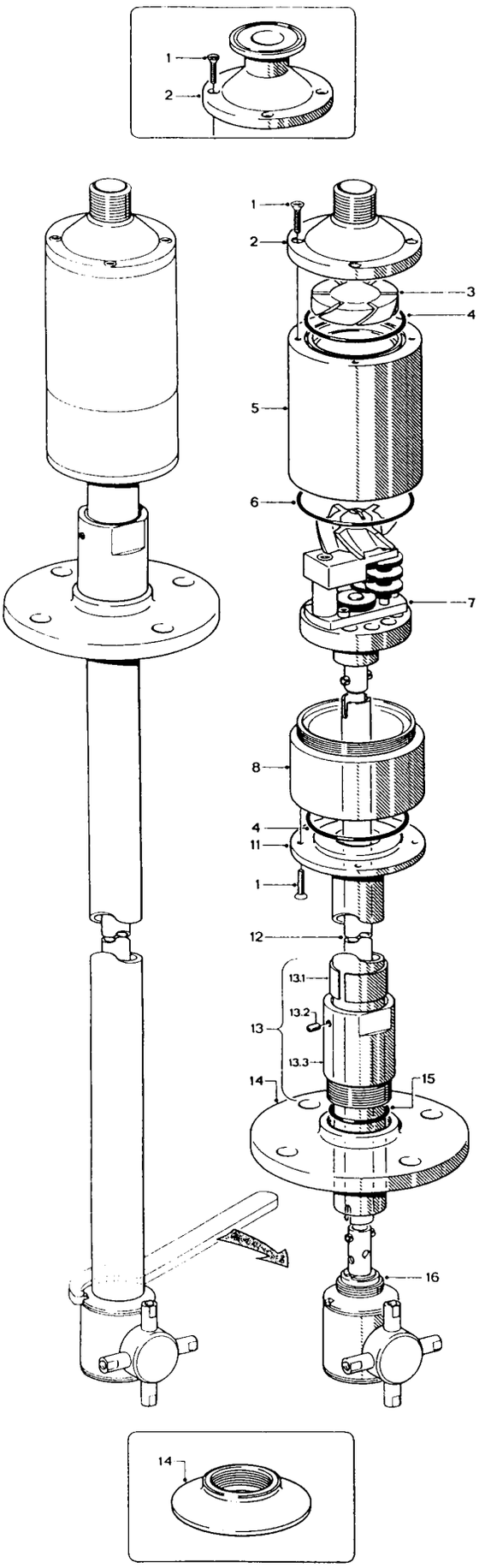

Gear box

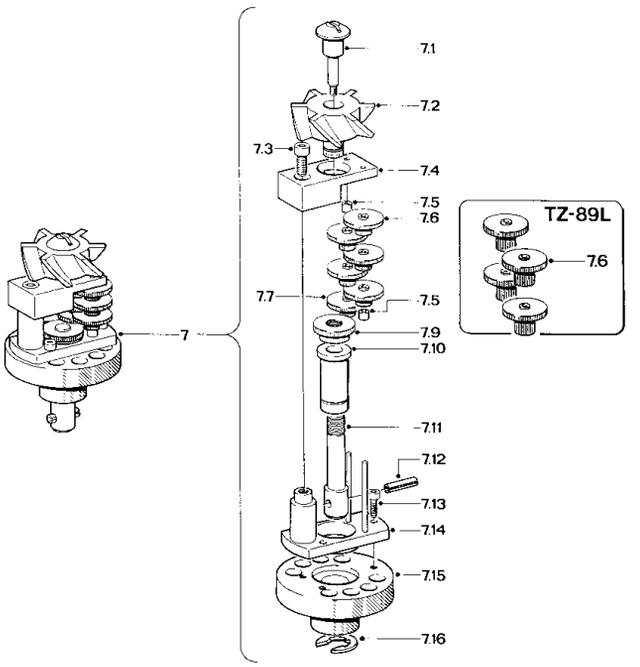

Cleaner head

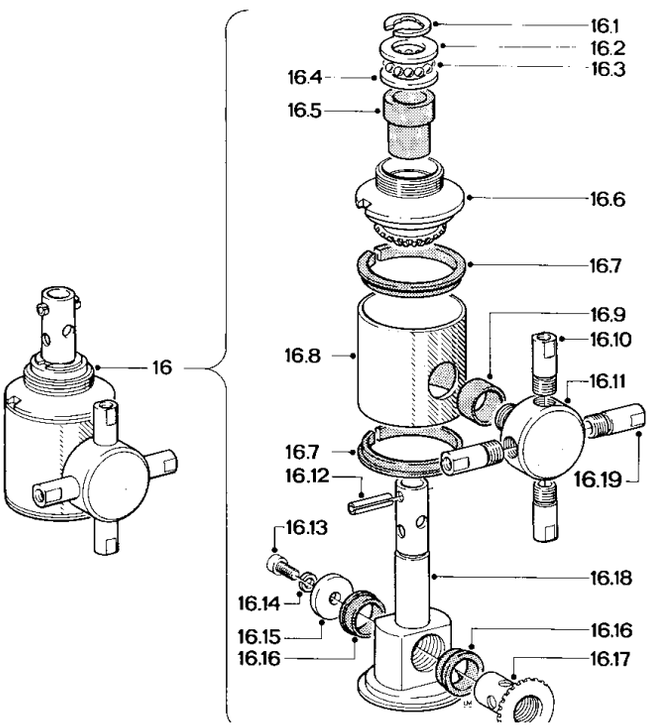

Reference List of Parts,
Toftejorg TZ-89LF

Pos		Qty	Denomination	Item no.	Remark
1		4	Screw	TE51A050	Spare part
2	□	1	Connection nipple 3/4" BSP	TE20A505	Spare part
	□	1	Connection nipple 3/4" NPT	TE20A506	Spare part
	□	1	1" Clamp connection	TE20A500	Spare part
3	□	1	Guide	TE20A520	Spare part
	□	1	Guide, polymer	TE20A52001	Spare part
4		2	O-ring	TE51T034	Spare part
5		1	Gear house		*Note
6		1	O-ring	TE51T036	Spare part
7		1	Gear unit complete	TE20A308	Spare part
7.1		1	Turbine shaft	TE20A530	Wear part
7.2		1	Turbine wheel	TE20A525	Wear part
		1	Turbine wheel, polymer	TE20A52501	Wear part
7.3		1	Screw	TE51A102	Spare part
7.4		1	Traverse	TE20A535	Spare part
7.5		2	Distance bush	TE20A555	Spare part
7.6		4	Gear wheel, polymer	TE20A559	Wear part
7.9		1	Traction wheel	TE20A566	Wear part
7.10		1	Bearing bush	TE20A577	Wear part
7.11		1	Drive shaft	TE20A571	Wear part
7.12		1	Tubular rivet	TE51C050	Wear part
7.13		3	Screw	TE51A101	Spare part
7.14		1	Gear frame	TE20A305	Wear part
7.15		1	Bearing plate	TE20A580	Spare part
7.16			See pos. 16.1	TE51C200	Wear part
8		1	Gear house lower part	TE20A515	Spare part
11		1	Centre tube	TE20A587/592	Spare part
12		1	Driver tube	TE20A581/586	Spare part
13		1	Flange guide	TE20A320	Spare part
13.1		1	Split bushing	TE20A602	Spare part
13.2		1	Pointed screw	TE51A011	Spare part
14	□	1	Flange 50	TE20A605	Spare part
	□	1	Flange 3"	TE20A607	Spare part
	□	1	3" Clamp flange	TE20A608	Spare part
15		1	O-ring	TE51T022	Spare part
16		1	Cleaner head complete	TE20A301	Spare part
16.1		2	Circlip	TE51C200	Wear part
16.2		1	Bearing washer, upper	TE20A616	Wear part
16.3		12	Ball	TE1262	Wear part
16.4		1	Bearing washer, lower	TE20A617	Wear part
16.5		1	Bush for stator	TE20A623	Wear part
16.6		1	Stator	TE20A626	Spare part
16.7		2	Bush	TE20A630	Wear part
16.8		1	Sleeve	TE20A635	Spare part
16.9		1	Bush	TE20A622	Wear part
16.10		2	Nozzle	TE20A652	Spare part
16.11		1	Nozzle head	TE20A650	Spare part
16.12		1	Tubular rivet	TE51C050	Wear part
16.13		1	Screw	TE51A100	Wear part
16.14		1	Spring washer	TE156	Wear part
16.15		1	Washer	TE20A640	Wear part
16.16		2	Collar bush	TE20A621	Wear part
16.17		1	Rotor	TE20A645	Wear part
16.18		1	Shaft for Cleaner head	TE20A610	Wear part
16.19		2	Plug	TE20A660	Spare part

□ Configuration according to delivery note/order

*Note: Pos. 5 is not sold as single spare part component but only as part of a machine maintenance/repair order. For further information please contact Alfa Laval Customer Support.

1.5

Main unit

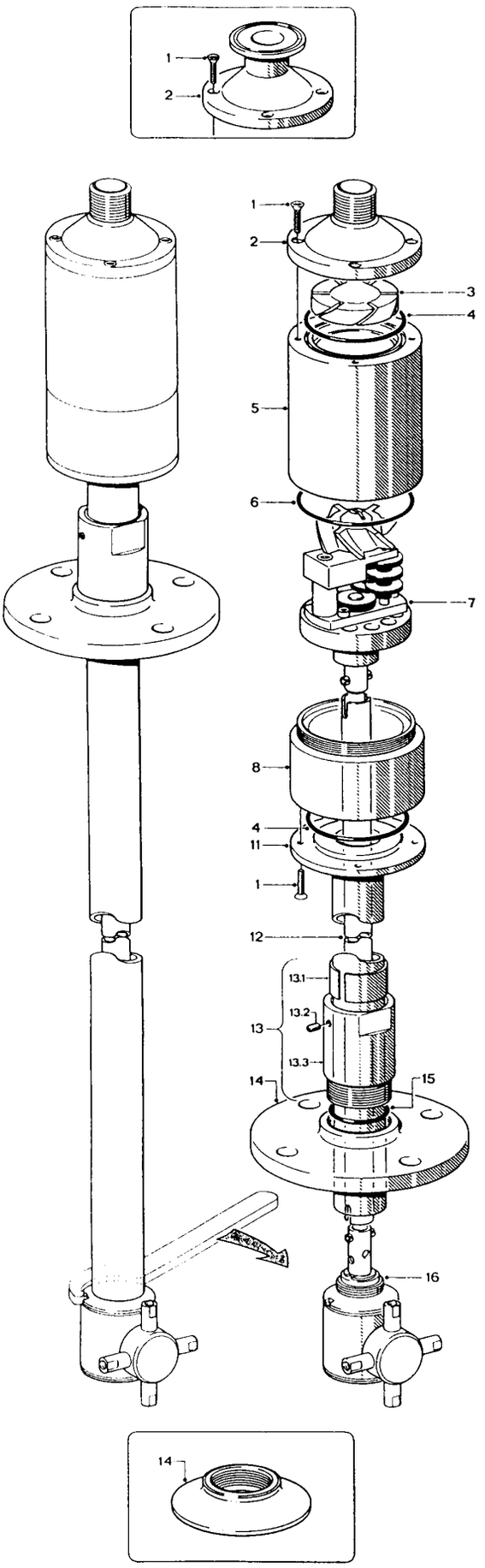

Gear box

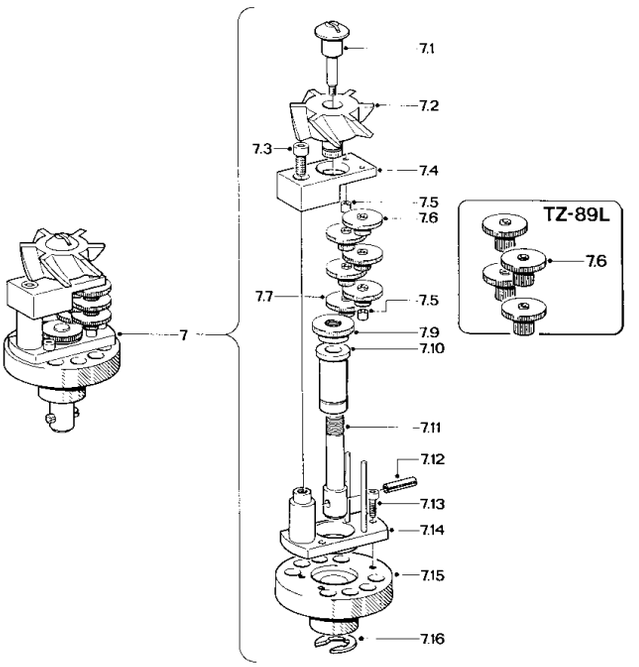

Cleaner head

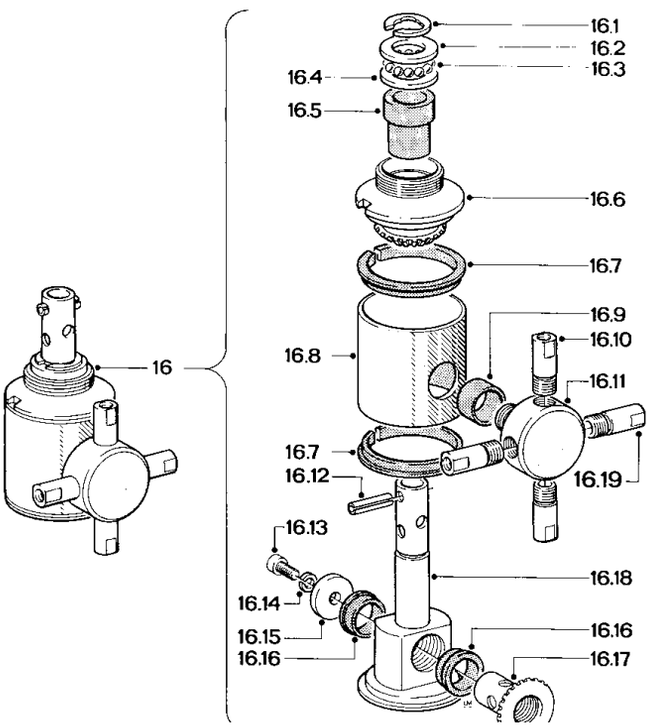

Service intervals

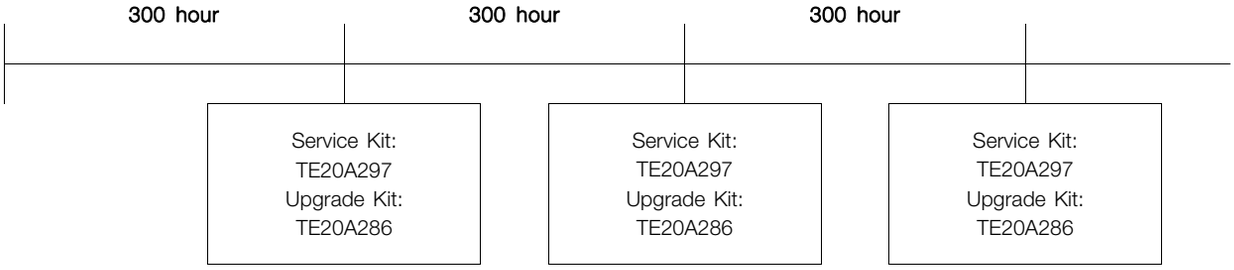

Pos	Qty	Denomination	Item no.
		Service Kit for Toftejorg TZ-89LF	TE20A297
Consisting of:			
4	2	O-ring, FEP/Silicone	TE51T034
6	1	O-ring, FEP/Silicone	TE51T036
15	1	O-ring, FEP/Silicone	TE51T022
7.6	4	Gear wheel, PEEK 450G	TE20A559
16.2	1	Bearing washer, upper	TE20A616
16.4	1	Bearing washer, lower	TE20A617

Pos	Qty	Denomination	Item no.
		Service Kit for Toftejorg TZ-89LF (Upgrade kit)	TE20A286
Consisting of:			
16.3	12	Ball for trust bearing	TE1262
7.6	4	Gear wheel, PEEK 450G	TE20A559
16.2	1	Bearing washer, upper	TE20A616
16.4	1	Bearing washer, lower	TE20A617
16.16	2	Collar bushr	TE20A621
16.9	1	Bush	TE20A622
16.5	1	Bush for stator	TE20A623
16.7	2	Bush	TE20A630
1	8	Screw	TE51A050
4	2	O.ring, FEP/Silicone	TE51T034

Tools for Alfa Laval Toftejorg TZ-89/TZ-89L

Pos	Qty	Denomination	Item no.
		Hook-spanner	TE81B039
		Spanner	
		Hex key for Allen Screw	

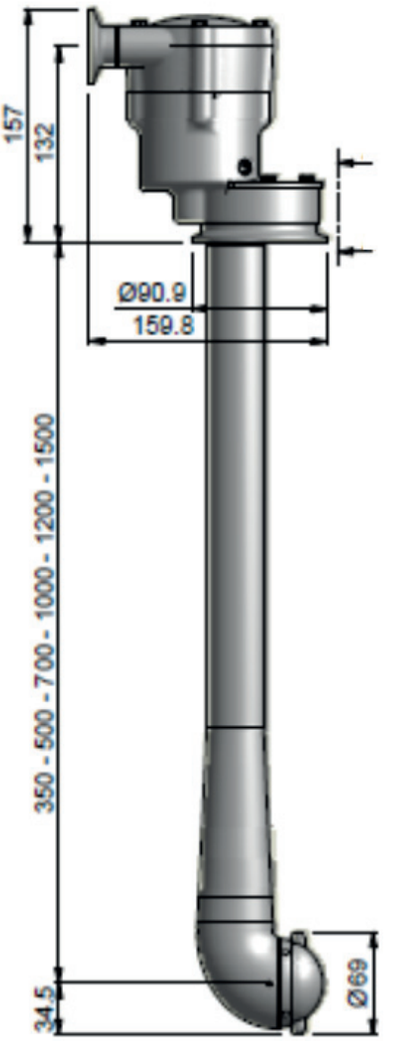

Old design, item numbers TE20Xxxx

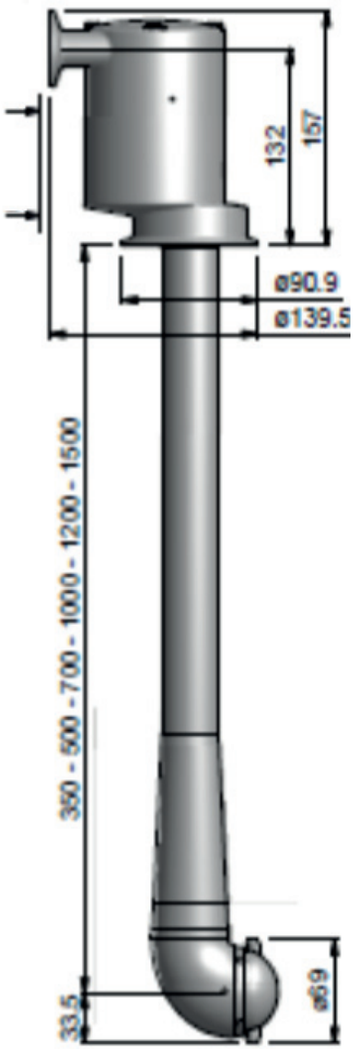

New design 3", item numbers TE24Xxxx

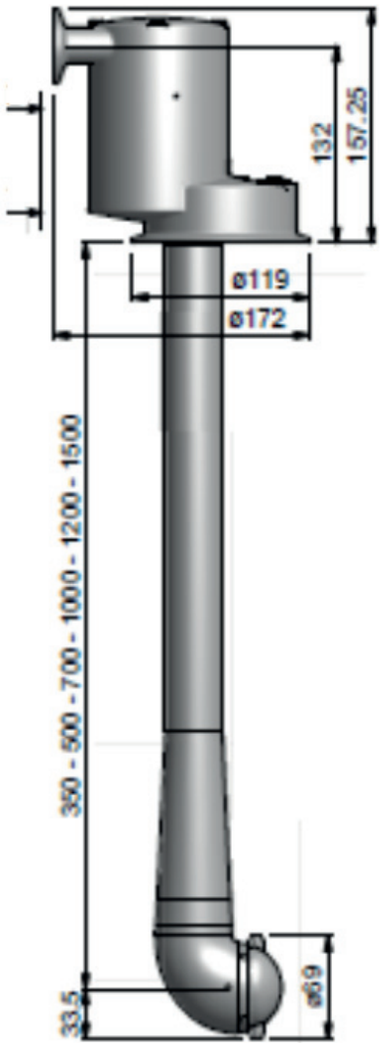

New design 4", item numbers TE24Xxxx

1.5

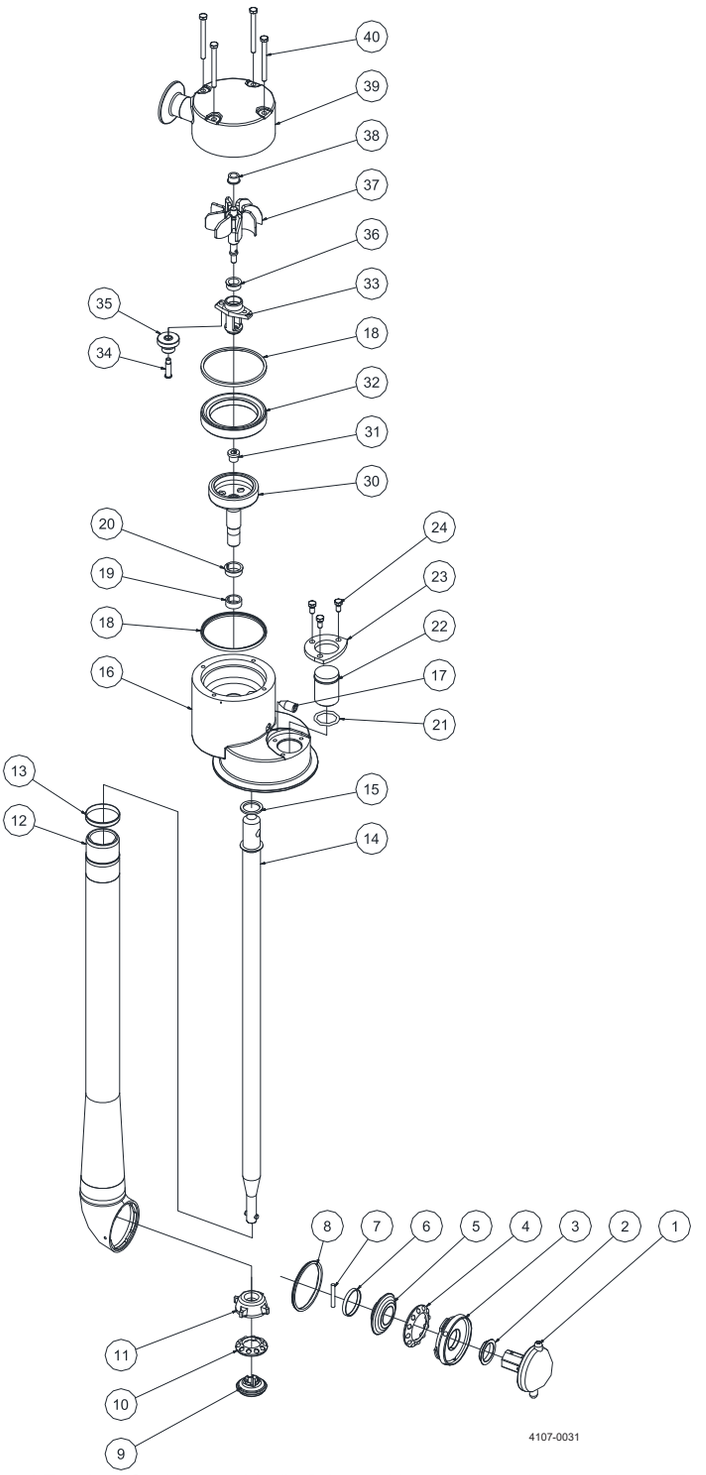

Alfa Laval Toftejorg SaniJet 20, Media Driven - New Version - item numbers TE24Xxxx

Pos		Qty	Denomination	Item no. for 4" version	Item no. for 3" version	Material	Remarks
1	□	1	Cleaner head, 2xø3.8mm	TE20B335	TE20B335	Stainless steel	Spare part
	□	1	Cleaner head, 4xø4.2mm	TE20B336	TE20B336	Stainless steel	Spare part
2	♦○●	1	Bearing bush	TE20B554	TE20B554	Polymer	Wear part
3		1	Retaining ring	TE20B552	TE20B552	Stainless steel	Wear part
4		1	Ball ring N	TE20B365	TE20B365	Polymer/titanium	Wear part
5		1	Bevel gear	TE20B550	TE20B550	Stainless steel	Wear part
6		1	Clip ring	TE20B571	TE20B571	Stainless steel	Spare part
7		1	Pin	TE20B572	TE20B572	Stainless steel	Spare part
8	□●	1	Seal ring H	TE20B553	TE20B553	EPDM	Wear part
	□○	1	Seal ring H	TE20B55301	TE20B55301	FPM	Wear part
	□♦	1	Seal ring H	TE20C553	TE20C553	FFKM	Wear part
9		1	Bevel gear	TE20B542	TE20B542	Stainless steel	Wear part
10		1	Ball ring	TE20B364	TE20B364	Polymer/titanium	Wear part
11		1	Ball race	TE20B539	TE20B539	Stainless steel	Wear part
12	□	1	Outer tube, L = 350 mm	TE20B310	TE20B310	Stainless steel	Spare part
	□	1	Outer tube, L = 500 mm	TE20B311	TE20B311	Stainless steel	Spare part
	□	1	Outer tube, L = 700 mm	TE20B312	TE20B312	Stainless steel	Spare part
	□	1	Outer tube, L = 1000 mm	TE20B313	TE20B313	Stainless steel	Spare part
	□	1	Outer tube, L = 1200 mm	TE20B314	TE20B314	Stainless steel	Spare part
	□	1	Outer tube, L = 1500 mm	TE20B315	TE20B315	Stainless steel	Spare part
13	♦○●	1	Bearing ring, top	TE20B510	TE20B510	Polymer	Wear part
14	□	1	Inner shaft, L = 350 mm	TE20B538	TE20B538	Stainless steel	Spare part
	□	1	Inner shaft, L = 500 mm	TE20B532	TE20B532	Stainless steel	Spare part
	□	1	Inner shaft, L = 700 mm	TE20B533	TE20B533	Stainless steel	Spare part
	□	1	Inner shaft, L = 1000 mm	TE20B534	TE20B534	Stainless steel	Spare part
	□	1	Inner shaft, L = 1200 mm	TE20B535	TE20B535	Stainless steel	Spare part
	□	1	Inner shaft, L = 1500 mm	TE20B536	TE20B536	Stainless steel	Spare part
15	□●	1	Plain seal S	TE20B511	TE20B511	EPDM	Wear part
	□○	1	Plain seal S	TE20B51101	TE20B51101	FPM	Wear part
	□♦	1	Plain seal S	TE20C511	TE20C511	FFKM	Wear part
16		1	Base housing	[1]	[1]	Stainless steel	
17		1	Retaining screw	TE20B512	TE20B512	Stainless steel	Spare part
18	□●	2	Gasket D	TE20B516	TE20B516	EPDM	Wear part
	□○	2	Gasket D	TE20B51601	TE20B51601	FPM	Wear part
	□♦	2	Gasket D	TE20C516	TE20C516	FFKM	Wear part
19	♦○●	1	Bearing bush, D2	TE20B514	TE20B514	Polymer	Wear part
20	♦○●	1	Bearing bush, D1	TE20B513	TE20B513	Polymer	Wear part
21	□●	1	O-ring	TE51T127		EPDM	Wear part
	□○	1	O-ring	TE51T008		FPM	Wear part
	□♦	1	O-ring	TE51T129		FFKM	Wear part
22		1	Plug	TE20B642		Stainless steel	Spare part
23		1	Bracket	TE24G594		Stainless steel	Spare part
24		3	Screw	TE51A172		Stainless steel	Spare part
30		1	Output shaft	TE20B598	TE20B598	Stainless steel	Wear part
31	♦○✧●	1	Bearing bush	TE20B588	TE20B588	Polymer	Wear part
32		1	Gear ring T2	TE20B593	TE20B593	Stainless steel	Wear part
33		1	Planet wheel carrier	TE20B589	TE20B589	Stainless steel	Spare part
34		1	Shaft f. planet wheel	TE20B591	TE20B591	Stainless steel	Wear part
35		1	Planet wheel T2	TE20B590	TE20B590	Polymer	Wear part
36	♦○✧●	1	Bearing bushing D1	TE20B600	TE20B600	Polymer	Wear part
37		1	Impeller w. shaft	TE20B585	TE20B585	Polymer/Stainless steel	Spare part
38	♦○✧●	1	Bearing bushing M	TE20B587	TE20B587	Polymer	Wear part
39	□	1	Inlet cap, ø 23	TE24B371	TE24B371	Stainless steel	Spare part
	□	1	Inlet cap, ø11	TE24B372	TE24B372	Stainless steel	Spare part
40		4	Screw	TE51A224	TE51A224	Stainless steel	Spare part

Service kits

		Item no.
✧	Minor service kit Toftejorg SaniJet 20, all versions	TE20B290
●	Service kit in EPDM for Toftejorg SaniJet 20	TE20B297
○	Service kit in FPM (Viton) for Toftejorg SaniJet 20	TE20B298
♦	Service kit in FFKM (Perlast) for Toftejorg SaniJet 20	TE20C297

Please note that some of the polymer parts are in PEEK, which is not resistant to concentrated sulfuric acid.

□ Configuration according to delivery note/order

[1] Pos. 16 is not sold as single Spare part component but only as part of a machine maintenance/repair order. For further information please contact Alfa Laval Customer Support.

The machine can be delivered with ATEX/IECEx certification.

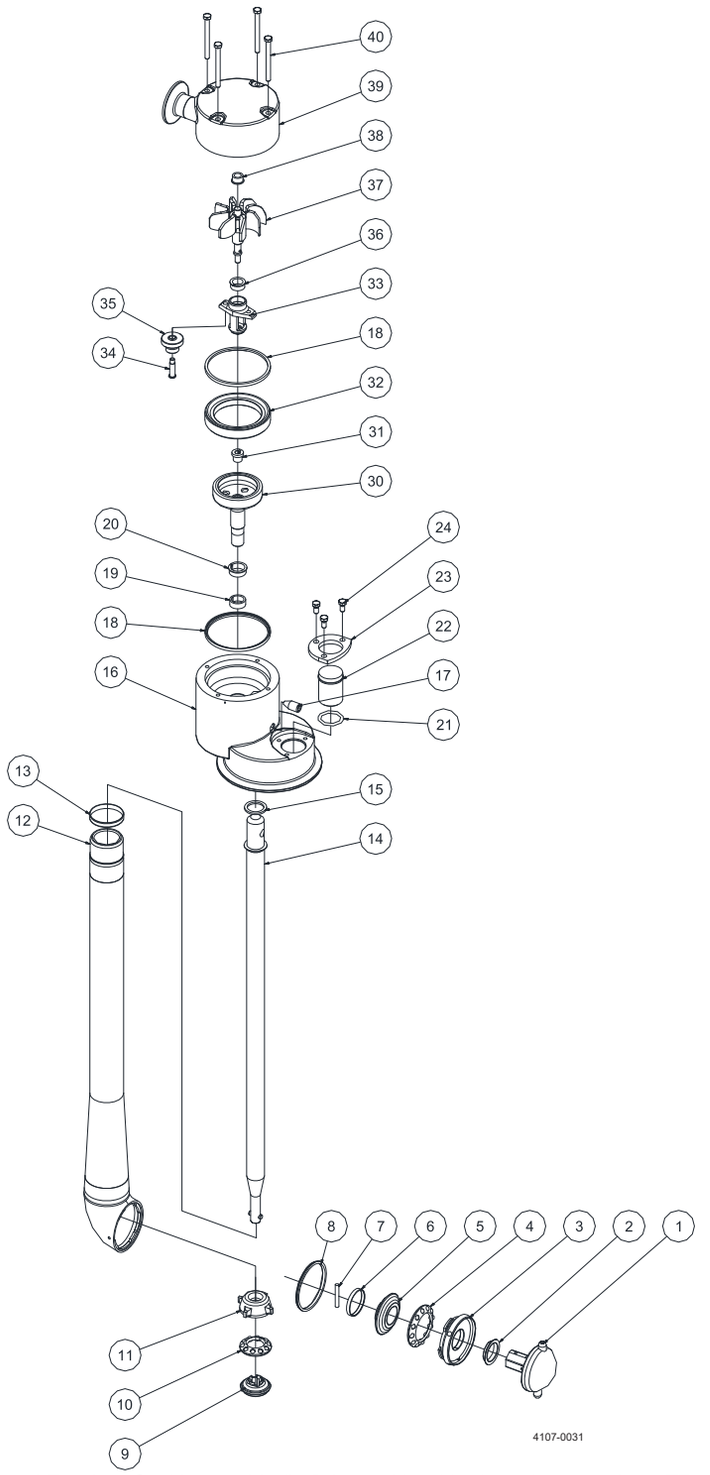

Alfa Laval Toftejorg SaniJet 20, Media Driven - New Version - item numbers TE24Xxxx

Pos		Qty	Denomination	Item no. for 4" version	Item no. for 3" version	Material	Remarks
1	□	1	Cleaner head, 2xø3.8mm	TE20E335	TE20E335	Stainless steel	Spare part
	□	1	Cleaner head, 4xø4.2mm	TE20E336	TE20E336	Stainless steel	Spare part
2	♦○●	1	Bearing bush	TE20B554	TE20B554	Polymer	Wear part
3		1	Retaining ring	TE20E552	TE20E552	Stainless steel	Wear part
4		1	Ball ring N	TE20B365	TE20B365	Polymer/titanium	Wear part
5		1	Bevel gear	TE20E550	TE20E550	Stainless steel	Wear part
6		1	Clip ring	TE20E571	TE20E571	Stainless steel	Spare part
7		1	Pin	TE20B572	TE20B572	Stainless steel	Spare part
8	□●	1	Seal ring H	TE20B553	TE20B553	EPDM	Wear part
	□○	1	Seal ring H	TE20B55301	TE20B55301	FPM	Wear part
	□♦	1	Seal ring H	TE20C553	TE20C553	FFKM	Wear part
9		1	Bevel gear	TE20E542	TE20E542	Stainless steel	Wear part
10		1	Ball ring	TE20B364	TE20B364	Polymer/titanium	Wear part
11		1	Ball race	TE20E539	TE20E539	Stainless steel	Wear part
12	□	1	Outer tube, L = 350 mm	TE20E310	TE20E310	Stainless steel	Spare part
	□	1	Outer tube, L = 500 mm	TE20E311	TE20E311	Stainless steel	Spare part
	□	1	Outer tube, L = 700 mm	TE20E312	TE20E312	Stainless steel	Spare part
	□	1	Outer tube, L = 1000 mm	TE20E313	TE20E313	Stainless steel	Spare part
	□	1	Outer tube, L = 1200 mm	TE20E314	TE20E314	Stainless steel	Spare part
	□	1	Outer tube, L = 1500 mm	TE20E315	TE20E315	Stainless steel	Spare part
13	♦○●	1	Bearing ring	TE20B510	TE20B510	Polymer	Wear part
14	□	1	Inner shaft, L = 350 mm	TE20E538	TE20E538	Stainless steel	Spare part
	□	1	Inner shaft, L = 500 mm	TE20E532	TE20E532	Stainless steel	Spare part
	□	1	Inner shaft, L = 700 mm	TE20E533	TE20E533	Stainless steel	Spare part
	□	1	Inner shaft, L = 1000 mm	TE20E534	TE20E534	Stainless steel	Spare part
	□	1	Inner shaft, L = 1200 mm	TE20E535	TE20E535	Stainless steel	Spare part
	□	1	Inner shaft, L = 1500 mm	TE20E536	TE20E536	Stainless steel	Spare part
15	□●	1	Plain seal S	TE20B511	TE20B511	EPDM	Wear part
	□○	1	Plain seal S	TE20B51101	TE20B51101	FPM	Wear part
	□♦	1	Plain seal S	TE20C511	TE20C511	FFKM	Wear part
16		1	Base housing	[1]	[1]	Stainless steel	
17		1	Retaining screw	TE20B512	TE20B512	Stainless steel	Spare part
18	□●	2	Gasket D	TE20B516	TE20B516	EPDM	Wear part
	□○	2	Gasket D	TE20B51601	TE20B51601	FPM	Wear part
	□♦	2	Gasket D	TE20C516	TE20C516	FFKM	Wear part
19	♦○●	1	Bearing bush, D2	TE20B514	TE20B514	Polymer	Wear part
20	♦○●	1	Bearing bush, D1	TE20B513	TE20B513	Polymer	Wear part
21	□●	1	O-ring	TE51T127		EPDM	Wear part
	□○	1	O-ring	TE51T008		FPM	Wear part
	□♦	1	O-ring	TE51T129		FFKM	Wear part
22		1	Plug	TE20E642		Stainless steel	Spare part
23		1	Bracket	TE24F594		Stainless steel	Spare part
24		3	Screw	TE20E654		Stainless steel	Spare part
30		1	Output shaft	TE20E598	TE20E598	Stainless steel	Wear part
31	♦○✧●	1	Bearing bush	TE20B588	TE20B588	Polymer	Wear part
32		1	Gear ring T2	TE20E593	TE20E593	Stainless steel	Wear part
33		1	Planet wheel carrier	TE20E589	TE20E589	Stainless steel	Spare part
34		1	Shaft f. planet wheel	TE20E591	TE20E591	Stainless steel	Wear part
35		1	Planet wheel T2	TE20B590	TE20B590	Polymer	Wear part
36	♦○✧●	1	Bearing bush D1	TE20B600	TE20B600	Polymer	Wear part
37		1	Impeller w. shaft	TE20E585	TE20E585	Polymer/Stainless steel	Spare part
38	♦○✧●	1	Bearing bush M	TE20B587	TE20B587	Polymer	Wear part
39	□	1	Inlet cap, ø23	TE24E371	TE24E371	Stainless steel	Spare part
	□	1	Inlet cap, ø11	TE24E372	TE24E372	Stainless steel	Spare part
40		4	Screw	TE20E653	TE20E653	Stainless steel	Spare part

Service kits

		Item no.
✧	Minor service kit Toftejorg SaniJet 20, all versions	TE20B290
●	Service kit in EPDM for Toftejorg SaniJet 20	TE20B297
○	Service kit in FPM (Viton) for Toftejorg SaniJet 20	TE20B298
♦	Service kit in FFKM (Perlast) for Toftejorg SaniJet 20	TE20C297

Please note that some of the polymer parts are in PEEK, which is not resistant to concentrated sulfuric acid.

□ Configuration according to delivery note/order

[1] Pos. 16 is not sold as single Spare part component but only as part of a machine maintenance/repair order. For further information please contact Alfa Laval Customer Support.

The machine can be delivered with ATEX/IECEx certification.

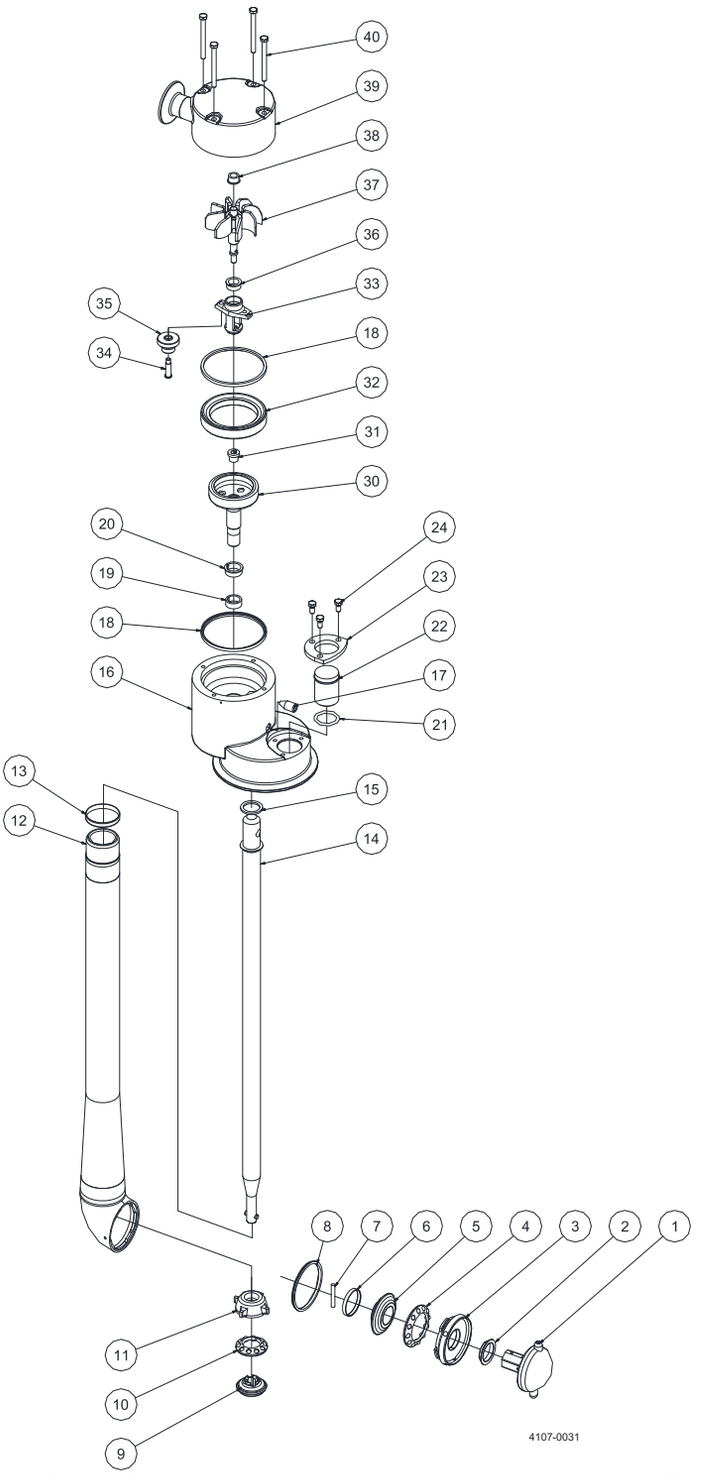

Alfa Laval Toftejorg SaniJet 20, Media Driven - New Version - item numbers TE24Xxxx

Pos		Qty	Denomination	Item no. for 4" version	Item no. for 3" version	Material	Remarks
1	□	1	Cleaner head, 2xø3.8mm	TE20C335	TE20C335	Alloy	Spare part
	□	1	Cleaner head, 4xø4.2mm	TE20C336	TE20C336	Alloy	Spare part
2	♦	1	Bearing bush	TE20B554	TE20B554	Polymer	Wear part
3		1	Retaining ring	TE20C552	TE20C552	Alloy	Wear part
4		1	Ball ring N	TE20C361	TE20C361	Polymer/Stain-less steel	Wear part
5		1	Bevel gear	TE20C550	TE20C550	Alloy	Wear part
6		1	Clip ring	TE20C571	TE20C571	Alloy	Spare part
7		1	Pin	TE20C655	TE20C655	Alloy	Spare part
8	♦	1	Seal ring H	TE20C553	TE20C553	FFKM	Wear part
9		1	Bevel gear	TE20C542	TE20C542	Stainless steel	Wear part
10		1	Ball ring	TE20C360	TE20C360	Polymer/Stain-less steel	Wear part
11		1	Ball race	TE20C539	TE20C539	Stainless steel	Wear part
12	□	1	Outer tube, L = 350 mm	TE20C310	TE20C310	Stainless steel	Spare part
	□	1	Outer tube, L = 500 mm	TE20C311	TE20C311	Stainless steel	Spare part
	□	1	Outer tube, L = 700 mm	TE20C312	TE20C312	Stainless steel	Spare part
	□	1	Outer tube, L = 1000 mm	TE20C313	TE20C313	Stainless steel	Spare part
	□	1	Outer tube, L = 1200 mm	TE20C314	TE20C314	Stainless steel	Spare part
	□	1	Outer tube, L = 1500 mm	TE20C315	TE20C315	Stainless steel	Spare part
13	♦	1	Bearing ring	TE20B510	TE20B510	Polymer	Wear part
14	□	1	Inner shaft, L = 350 mm	TE20C538	TE20C538	Stainless steel	Spare part
	□	1	Inner shaft, L = 500 mm	TE20C532	TE20C532	Stainless steel	Spare part
	□	1	Inner shaft, L = 700 mm	TE20C533	TE20C533	Stainless steel	Spare part
	□	1	Inner shaft, L = 1000 mm	TE20C534	TE20C534	Stainless steel	Spare part
	□	1	Inner shaft, L = 1200 mm	TE20C535	TE20C535	Stainless steel	Spare part
	□	1	Inner shaft, L = 1500 mm	TE20C536	TE20C536	Stainless steel	Spare part
15	♦	1	Plain seal	TE20C511	TE20C511	FFKM	Wear part
16		1	Base housing	[1]	[1]	Alloy	
17		1	Retaining screw	TE20B512	TE20B512	Stainless steel	Spare part
18	♦	2	Gasket	TE20C516	TE20C516	FFKM	Wear part
19	♦	1	Bearing bush	TE20B514	TE20B514	Polymer	Wear part
20	♦	1	Bearing bush	TE20B513	TE20B513	Polymer	Wear part
21	♦	1	O-ring	TE51T129		FFKM	Wear part
22		1	Plug	TE20C642		Stainless steel	Spare part
23		1	Bracket	TE24G594		Stainless steel	Spare part
24		3	Screw	TE51A172		Stainless steel	Spare part
30		1	Output shaft	TE20C598	TE20C598	Alloy	Wear part
31	♦✧	1	Bearing bush	TE20B588	TE20B588	Polymer	Wear part
32		1	Gear ring T2	TE20C593	TE20C593	Alloy	Wear part
33		1	Planet wheel carrier	TE20C589	TE20C589	Alloy	Spare part
34		1	Shaft f. planet wheel	TE20C591	TE20C591	Alloy	Wear part
35		1	Planet wheel T2	TE20B590	TE20B590	Polymer	Wear part
36	♦✧	1	Bearing bush	TE20B600	TE20B600	Polymer	Wear part
37	□	1	Impeller	TE20B583	TE20B583	Polymer	Spare part
	□	1	Impeller shaft	TE20C582	TE20C582	Alloy	Wear part
38	♦✧	1	Bearing bush	TE20B587	TE20B587	Polymer	Wear part
39	□	1	Inlet cap, Ø23	TE24C371	TE24C371	Alloy	Spare part
	□	1	Inlet cap, Ø11	TE24C372	TE24C372	Alloy	Spare part
40		4	Screw	TE51A224	TE51A224	Stainless steel	Spare part

	Item no.
Service kits	
✧ **Minor service kit Toftejorg SaniJet 20, all versions**	**TE20B290**
♦ **Service kit in FFKM (Perlast) for Toftejorg SaniJet 20**	**TE20C297**

Please note that some of the polymer parts are in PEEK, which is not resistant to concentrated sulfuric acid.

□ Configuration according to delivery note/order

[1] Pos. 16 is not sold as single Spare part component but only as part of a machine maintenance/repair order. For further information please contact Alfa Laval Customer Support.

The machine can be delivered with ATEX/IECEx certification.

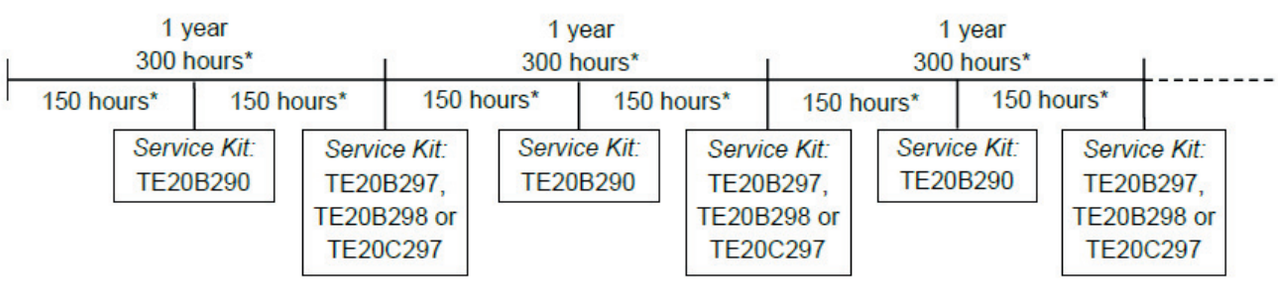

Minor Service Kit for Alfa Laval Toftejorg SaniJet 20 media driven version
Article no. TE20B290

Pos	Qty	Denomination	Item no.	Material
31	1	Bearing bushing	TE20B588	Polymer
36	1	Bearing bushing D1	TE20B600	Polymer
38	1	Bearing bushing M	TE20B587	Polymer

Service Kit in EPDM for Alfa Laval Toftejorg SaniJet 20 media driven version
Article no. TE20B297

Pos	Qty	Denomination	Item no.	Material
2	1	Bearing bush	TE20B554	Polymer
8	1	Seal ring H	TE20B553	EPDM
13	1	Bearing ring, top	TE20B510	Polymer
15	1	Plain seal S	TE20B511	EPDM
18	2	Gasket D	TE20B516	EPDM
19	1	Bearing bush D2	TE20B514	Polymer
20	1	Bearing bush D1	TE20B513	Polymer
21	1	O-ring	TE51T127	EPDM
31	1	Bearing bushing	TE20B588	Polymer
36	1	Bearing bushing D1	TE20B600	Polymer
38	1	Bearing bushing M	TE20B587	Polymer

Service Kit in FPM (Viton) for Alfa Laval Toftejorg SaniJet 20 media driven version
Article no. TE20B298

Pos	Qty	Denomination	Item no.	Material
2	1	Bearing bush	TE20B554	Polymer
8	1	Seal ring H	TE20B55301	FPM (Viton)
13	1	Bearing ring, top	TE20B510	Polymer
15	1	Plain seal S	TE20B51101	FPM (Viton)
18	2	Gasket D	TE20B51601	FPM (Viton)
19	1	Bearing bush D2	TE20B514	Polymer
20	1	Bearing bush D1	TE20B513	Polymer
21	1	O-ring	TE51T008	FPM (Viton)
31	1	Bearing bushing	TE20B588	Polymer
36	1	Bearing bushing D1	TE20B600	Polymer
38	1	Bearing bushing M	TE20B587	Polymer

Service Kit in FFKM (Perlast) for Alfa Laval Toftejorg SaniJet 20 media driven version
Article no. TE20C297

Pos	Qty	Denomination	Item no.	Material
2	1	Bearing bush	TE20B554	Polymer
8	1	Seal ring H	TE20C553	FFKM
13	1	Bearing ring, top	TE20B510	Polymer
15	1	Plain seal S	TE20C511	FFKM
18	2	Gasket D	TE20C516	FFKM
19	1	Bearing bush D2	TE20B514	Polymer
20	1	Bearing bush D1	TE20B513	Polymer
21	1	O-ring	TE51T129	FFKM
31	1	Bearing bushing	TE20B588	Polymer
36	1	Bearing bushing D1	TE20B600	Polymer
38	1	Bearing bushing M	TE20B587	Polymer

Tools

Pos	Qty	Denomination	Item no
		Socket Wrench w. pin	TE462A
		Hook spanner	TE20B701

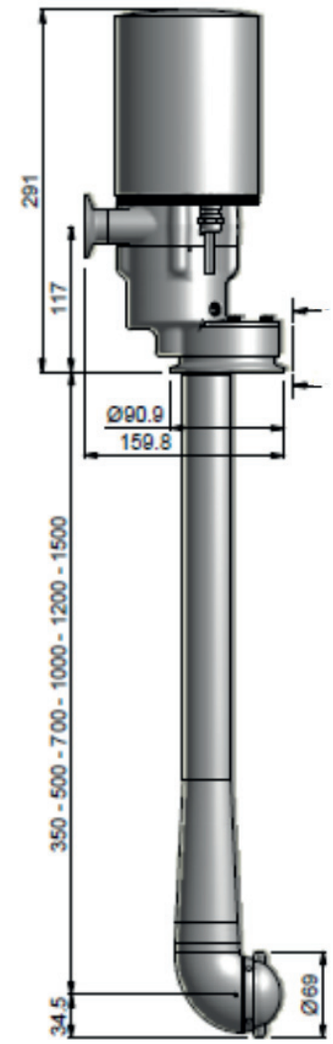

Old design, item numbers TE20Xxxx

1.5

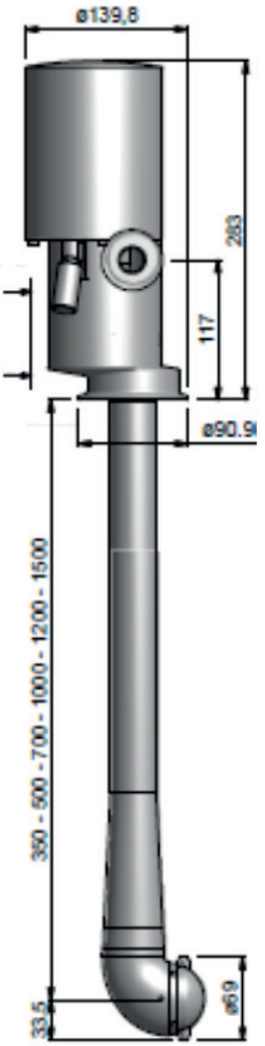

New design 3", item numbers TE24Xxxx

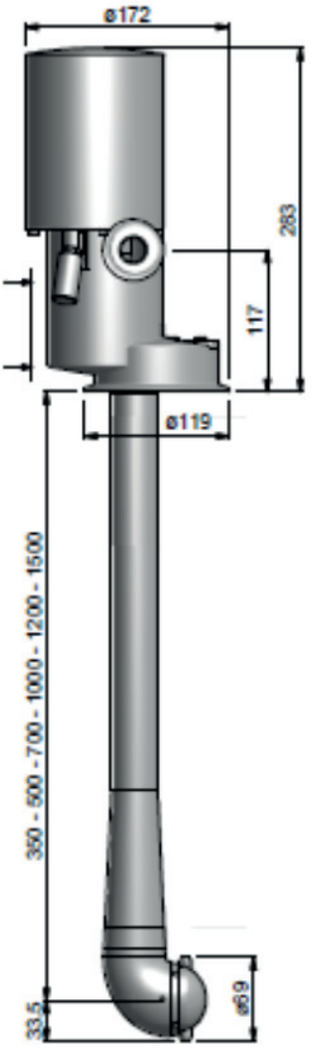

New design 4", item numbers TE24Xxxx

1.5

Alfa Laval Toftejorg SaniJet 20, Air Driven - New Version, item numbers TE24Xxxx

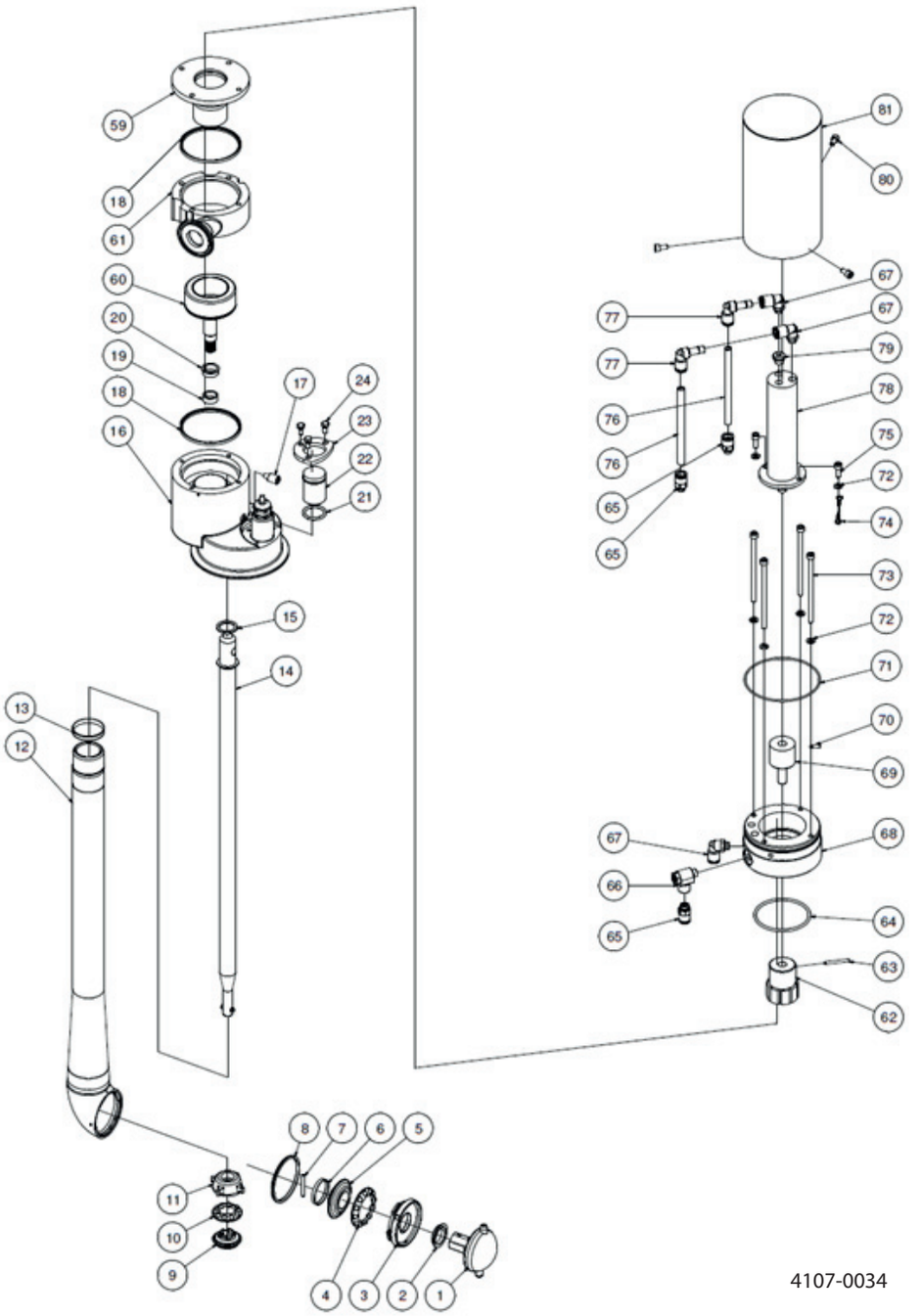

4107-0034

Pos		Qty	Denomination	Item no. for 4" version	Item no. for 3" version	Material	Remarks
Toftejorg SaniJet 20, Air Driven (EPDM as standard)							
1	□	1	Cleaner head 2xø2.0mm	TE20B334	TE20B334	Stainless steel	Spare part
	□	1	Cleaner head 2xø3.8mm	TE20B335	TE20B335	Stainless steel	Spare part
	□	1	Cleaner head 4xø4.2mm	TE20B336	TE20B336	Stainless steel	Spare part
2		1	Bearing bush	TE20B554	TE20B554	Polymer	Wear part
3		1	Retaining ring	TE20B552	TE20B552	Stainless steel	Wear part
4		1	Ball ring N	TE20B365	TE20B365	Polym./titan.	Wear part
5		1	Bevel gear	TE20B550	TE20B550	Stainless steel	Wear part
6		1	Clip ring	TE20B571	TE20B571	Stainless steel	Spare part
7		1	Pin	TE20B572	TE20B572	Stainless steel	Spare part
8	□	1	Seal ring H	TE20B553	TE20B553	EPDM	Wear part
	□	1	Seal ring H	TE20B55301	TE20B55301	FPM	Wear part
	□	1	Seal ring H	TE20C553	TE20C553	FFKM	Wear part
9		1	Bevel gear	TE20B542	TE20B542	Stainless steel	Wear part
10		1	Ball ring	TE20B364	TE20B364	Polym./titan.	Wear part
11		1	Ball race	TE20B539	TE20B539	Stainless steel	Wear part
12	□	1	Outer tube, L = 350 mm	TE20B310	TE20B310	Stainless steel	Spare part
	□	1	Outer tube, L = 500 mm	TE20B311	TE20B311	Stainless steel	Spare part
	□	1	Outer tube, L = 700 mm	TE20B312	TE20B312	Stainless steel	Spare part
	□	1	Outer tube, L = 1000 mm	TE20B313	TE20B313	Stainless steel	Spare part
	□	1	Outer tube, L = 1200 mm	TE20B314	TE20B314	Stainless steel	Spare part
	□	1	Outer tube, L = 1500 mm	TE20B315	TE20B315	Stainless steel	Spare part
13		1	Bearing ring	TE20B510	TE20B510	Polymer	Wear part
14	□	1	Inner shaft, L = 350 mm	TE20B538	TE20B538	Stainless steel	Spare part
	□	1	Inner shaft, L = 500 mm	TE20B532	TE20B532	Stainless steel	Spare part
	□	1	Inner shaft, L = 700 mm	TE20B533	TE20B533	Stainless steel	Spare part
	□	1	Inner shaft, L = 1000 mm	TE20B534	TE20B534	Stainless steel	Spare part
	□	1	Inner shaft, L = 1200 mm	TE20B535	TE20B535	Stainless steel	Spare part
	□	1	Inner shaft, L = 1500 mm	TE20B536	TE20B536	Stainless steel	Spare part
15		1	Plain seal	TE20B511	TE20B511	EPDM	Wear part
	□	1	Plain seal	TE20B51101	TE20B51101	FPM	Wear part
	□	1	Plain seal	TE20C511	TE20C511	FFKM	Wear part
16		1	Base housing			Stainless steel	*Note
17		1	Retaining screw	TE20B512	TE20B512	Stainless steel	Spare part
18	□	2	Gasket	TE20B516	TE20B516	EPDM	Wear part
	□	2	Gasket	TE20B51601	TE20B51601	FPM	Wear part
	□	2	Gasket	TE20C516	TE20C516	FFKM	Wear part
19		1	Bearing bush	TE20B514	TE20B514	Polymer	Wear part
20		1	Bearing bush	TE20B513	TE20B513	Polymer	Wear part
21	□	1	O-ring	TE51T127		EPDM	Wear part
	□	1	O-ring	TE51T008		FPM	Wear part
	□	1	O-ring	TE51T129		FFKM	Wear part
22		1	Plug	TE20B642		Stainless steel	Spare part
23		1	Bracket	TE24G594		Stainless steel	Spare part
24		3	Screw	TE51A172		Stainless steel	Spare part
59		1	Motor flange welded A	TE24B349	TE24B349	Stainless steel	Spare part
60		1	Rotor outer complete	TE20B340	TE20B340	Stainless steel/steel	Spare part
61		1	Inlet housing 1" Tri-clamp	TE24B351	TE24B351	Stainless steel	Spare part
62		1	Rotor inner w. magnets	TE20B343	TE20B343	Steel	Spare part
63		1	Tubular rivet	TE51C052	TE51C052	Stainless steel	Spare part
64		1	O-ring	TE51T142	TE51T142	Elastomer	Spare part
65		3	Straight connector	TE51U392	TE51U392	Brass, Nickel-pl.	Spare part
66		1	Flow control valve	TE51U395	TE51U395	Brass, Nickel-pl.	Spare part
67		3	L-connector	TE51U393	TE51U393	Brass, Nickel-pl.	Spare part
68		1	Flange for air motor	TE24B557	TE24B557	Polymer	Spare part
69		1	Adapter for air motor	TE24B556	TE24B556	Polymer	Spare part
70		1	Screw	TE51A096	TE51A096	Stainless steel	Spare part
71		1	O-ring	TE51T143	TE51T143	Elastomer	Spare part
72		6	Washer	TE51B013	TE51B013	Stainless steel	Spare part
73		4	Screw	TE51A097	TE51A097	Stainless steel	Spare part
74		1	Wire for grounding	TE24B353	TE24B353	Stainless steel/alu.	Spare part
75		2	Screw	TE51A112	TE51A112	Stainless steel	Spare part
76		2	Air tubing	TE51U397	TE51U397	Polymer	Spare part
77		2	L-connector	TE51U394	TE51U394	Brass, Nickel-pl.	Spare part
78		1	Air motor	TE51U009	TE51U009	Spare part	
79		1	Plug	TE51U396	TE51U396	Brass, Nickel-pl.	Spare part
80		3	Screw	TE51A100	TE51A100	Stainless steel	Spare part
81		1	Motor cover	TE24B348	TE24B348	Stainless steel	Spare part

Please note that some of the polymer parts are in PEEK, which is not resistant to concentrated sulfuric acid.

□ Configuration according to delivery note/order

*Note: Pos. 16 is not sold as single Spare part component but only as part of a machine maintenance/repair order. For further information please contact Alfa Laval Customer Support.

1.5

Alfa Laval Toftejorg SaniJet 20, Air Driven - New Version

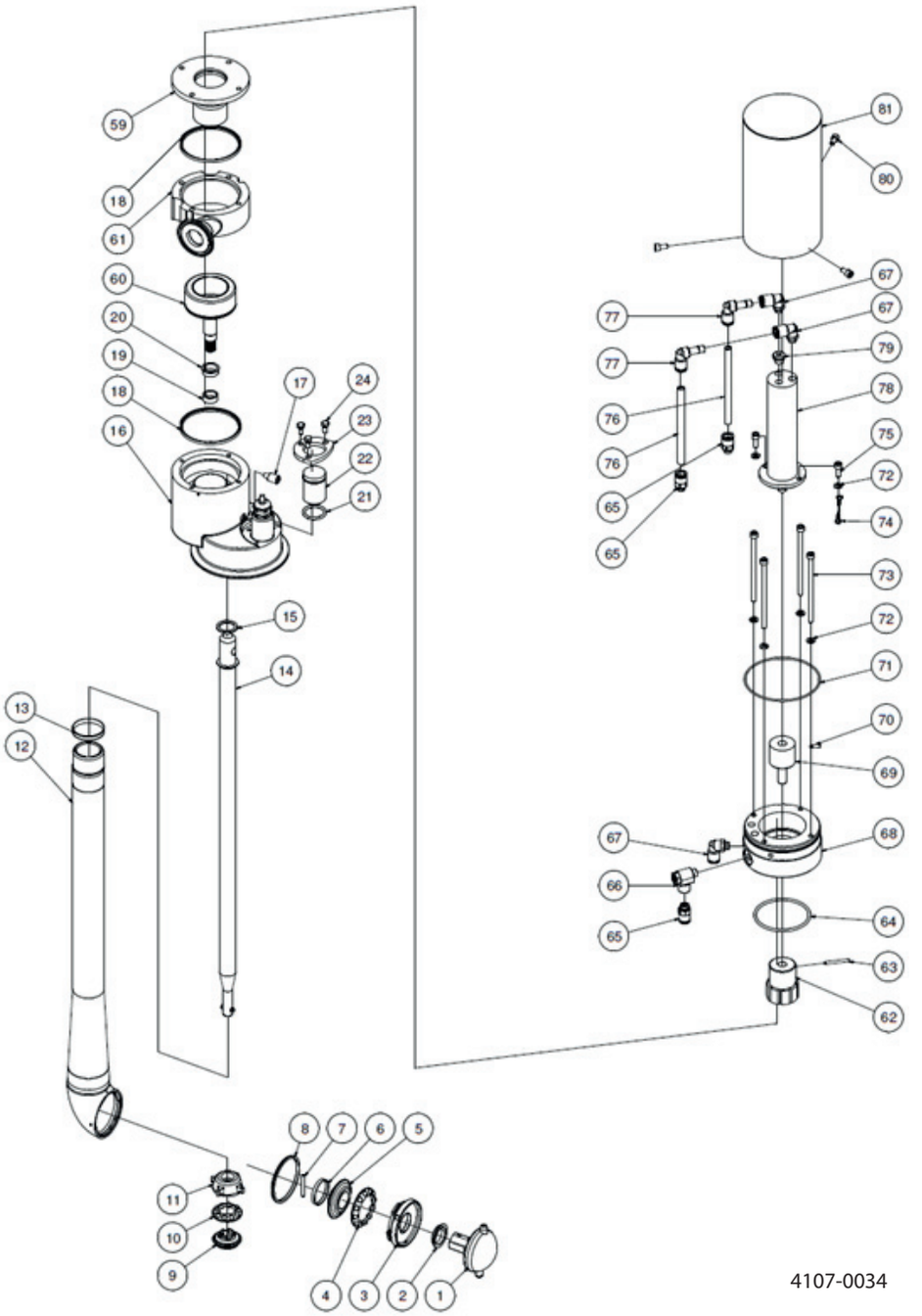

4107-0034

Pos		Qty	Denomination	Item no. for 4" version	Item no. for 3" version	Material	Remarks
Toftejorg SaniJet 20, Air Driven with improved surface finish (EPDM as standard)							
1	☐	1	Cleaner head 2xø2.0mm	TE20E334	TE20E334	Stainless steel	Spare part
	☐	1	Cleaner head 2xø3.8mm	TE20E335	TE20E335	Stainless steel	Spare part
	☐	1	Cleaner head 4xø4.2mm	TE20E336	TE20E336	Stainless steel	Spare part
2		1	Bearing bush	TE20B554	TE20B554	Polymer	Wear part
3		1	Retaining ring	TE20E552	TE20E552	Stainless steel	Wear part
4		1	Ball ring N	TE20B365	TE20B365	Polym./titan.	Wear part
5		1	Bevel gear	TE20E550	TE20E550	Stainless steel	Wear part
6		1	Clip ring	TE20E571	TE20E571	Stainless steel	Spare part
7		1	Pin	TE20E572	TE20E572	Stainless steel	Spare part
8	☐	1	Seal ring H	TE20B553	TE20B553	EPDM	Wear part
	☐	1	Seal ring H	TE20B55301	TE20B55301	FPM	Wear part
	☐	1	Seal ring H	TE20C553	TE20C553	FFKM	Wear part
9		1	Bevel gear	TE20E542	TE20E542	Stainless steel	Wear part
10		1	Ball ring	TE20B364	TE20B364	Polym./titan.	Wear part
11		1	Ball race	TE20E539	TE20E539	Stainless steel	Wear part
12	☐	1	Outer tube, L = 350 mm	TE20E310	TE20E310	Stainless steel	Spare part
	☐	1	Outer tube, L = 500 mm	TE20E311	TE20E311	Stainless steel	Spare part
	☐	1	Outer tube, L = 700 mm	TE20E312	TE20E312	Stainless steel	Spare part
	☐	1	Outer tube, L = 1000 mm	TE20E313	TE20E313	Stainless steel	Spare part
	☐	1	Outer tube, L = 1200 mm	TE20E314	TE20E314	Stainless steel	Spare part
	☐	1	Outer tube, L = 1500 mm	TE20E315	TE20E315	Stainless steel	Spare part
13		1	Bearing ring	TE20B510	TE20B510	Polymer	Wear part
14	☐	1	Inner shaft, L = 350 mm	TE20E538	TE20E538	Stainless steel	Spare part
	☐	1	Inner shaft, L = 500 mm	TE20E532	TE20E532	Stainless steel	Spare part
	☐	1	Inner shaft, L = 700 mm	TE20E533	TE20E533	Stainless steel	Spare part
	☐	1	Inner shaft, L = 1000 mm	TE20E534	TE20E534	Stainless steel	Spare part
	☐	1	Inner shaft, L = 1200 mm	TE20E535	TE20E535	Stainless steel	Spare part
	☐	1	Inner shaft, L = 1500 mm	TE20E536	TE20E536	Stainless steel	Spare part
15	☐	1	Plain seal	TE20B511	TE20B511	EPDM	Wear part
	☐	1	Plain seal	TE20B51101	TE20B51101	FPM	Wear part
	☐	1	Plain seal	TE20C511	TE20C511	FFKM	Wear part
16		1	Base housing			Stainless steel	*Note
17		1	Retaining screw	TE20B512	TE20B512	Stainless steel	Spare part
18	☐	2	Gasket	TE20B516	TE20B516	EPDM	Wear part
	☐	2	Gasket	TE20B51601	TE20B51601	FPM	Wear part
	☐	2	Gasket	TE20C516	TE20C516	FFKM	Wear part
19		1	Bearing bush	TE20B514	TE20B514	Polymer	Wear part
20		1	Bearing bush	TE20B513	TE20B513	Polymer	Wear part
21	☐	1	O-ring	TE51T127		EPDM	Wear part
	☐	1	O-ring	TE51T008		FPM	Wear part
	☐	1	O-ring	TE51T129		FFKM	Wear part
22		1	Plug	TE20E642		Stainless steel	Spare part
23		1	Bracket	TE24F594		Stainless steel	Spare part
24		3	Screw	TE20E654		Stainless steel	Spare part
59		1	Motor flange welded A	TE24E346	TE24E346	Stainless steel	Spare part
60		1	Rotor outer complete	TE20E340	TE20E340	Stainless steel/steel	Spare part
61		1	Inlet housing 1" Tri-clamp	TE24E351	TE24E351	Stainless steel	Spare part
62		1	Rotor inner w. magnets	TE20B343	TE20B343	Steel	Spare part
63		1	Tubular rivet	TE51C052	TE51C052	Stainless steel	Spare part
64		1	O-ring	TE51T142	TE51T142	Elastomer	Spare part
65		3	Straight connector	TE51U392	TE51U392	Brass, Nickel-pl.	Spare part
66		1	Flow control valve	TE51U395	TE51U395	Brass, Nickel-pl.	Spare part
67		3	L-connector	TE51U393	TE51U393	Brass, Nickel-pl.	Spare part
68		1	Flange for air motor	TE24B557	TE24B557	Polymer	Spare part
69		1	Adapter for air motor	TE24B556	TE24B556	Polymer	Spare part
70		1	Screw	TE51A096	TE51A096	Stainless steel	Spare part
71		1	O-ring	TE51T143	TE51T143	Elastomer	Spare part
72		6	Washer	TE51B013	TE51B013	Stainless steel	Spare part
73		4	Screw	TE51A097	TE51A097	Stainless steel	Spare part
74		1	Wire for grounding	TE24B353	TE24B353	Stainless steel/alu.	Spare part
75		2	Screw	TE51A112	TE51A112	Stainless steel	Spare part
76		2	Air tubing	TE51U397	TE51U397	Polymer	Spare part
77		2	L-connector	TE51U394	TE51U394	Brass, Nickel-pl.	Spare part
78		1	Air motor	TE51U009	TE51U009	Spare part	
79		1	Plug	TE51U396	TE51U396	Brass, Nickel-pl.	Spare part
80		3	Screw	TE51A100	TE51A100	Stainless steel	Spare part
81		1	Motor cover	TE24B348	TE24B348	Stainless steel	Spare part

Please note that some of the polymer parts are in PEEK, which is not resistant to concentrated sulfuric acid.

☐ Configuration according to delivery note/order

*Note: Pos. 16 is not sold as single Spare part component but only as part of a machine maintenance/repair order. For further information please contact Alfa Laval Customer Support.

1.5

Alfa Laval Toftejorg SaniJet 20, Air Driven - New Version

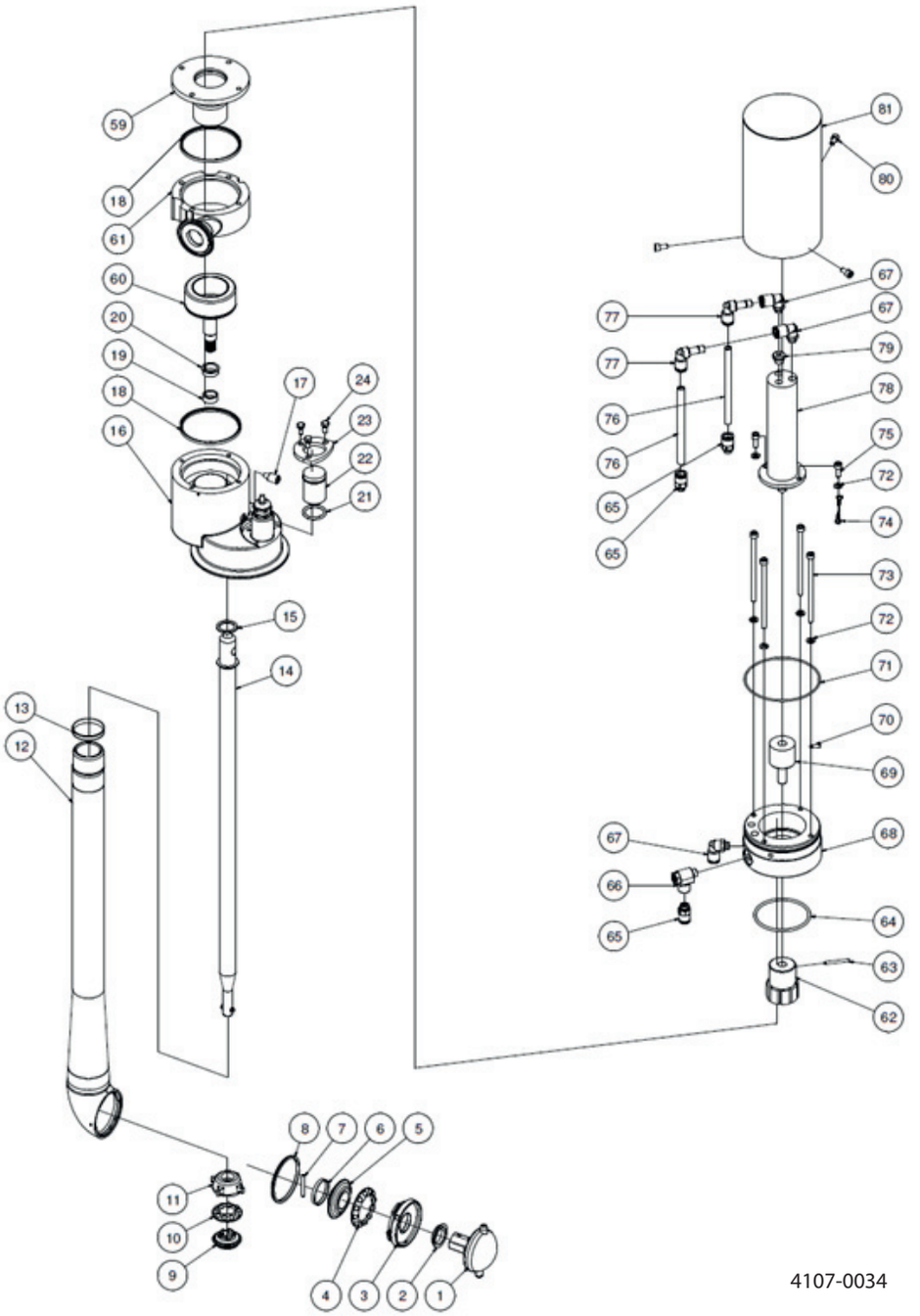

4107-0034

Pos		Qty	Denomination	Item no. for 4" version	Item no. for 3" version	Material	Remarks
Toftejorg SaniJet 20, Air Driven, Hastelloy version (FFKM as standard)							
1	☐	1	Cleaner head 2xø2.0mm	TE20C334	TE20C334	Alloy	Spare part
	☐	1	Cleaner head 2xø3.8mm	TE20C335	TE20C335	Alloy	Spare part
	☐	1	Cleaner head 4xø4.2mm	TE20C336	TE20C336	Alloy	Spare part
2		1	Bearing bush	TE20B554	TE20B554	Polymer	Wear part
3		1	Retaining ring	TE20C552	TE20C552	Alloy	Wear part
4		1	Ball ring N	TE20C361	TE20C361	Polym./titan.	Wear part
5		1	Bevel gear	TE20C550	TE20C550	Alloy	Wear part
6		1	Clip ring	TE20C571	TE20C571	Alloy	Spare part
7		1	Pin	TE20C655	TE20C655	Alloy	Spare part
8		1	Seal ring H	TE20C553	TE20C553	FFKM	Wear part
9		1	Bevel gear	TE20C542	TE20C542	Alloy	Wear part
10		1	Ball ring	TE20C360	TE20C360	Polym./titan.	Wear part
11		1	Ball race	TE20C539	TE20C539	Alloy	Wear part
12	☐	1	Outer tube, L = 350 mm	TE20C310	TE20C310	Alloy	Spare part
	☐	1	Outer tube, L = 500 mm	TE20C311	TE20C311	Alloy	Spare part
	☐	1	Outer tube, L = 700 mm	TE20C312	TE20C312	Alloy	Spare part
	☐	1	Outer tube, L = 1000 mm	TE20C313	TE20C313	Alloy	Spare part
	☐	1	Outer tube, L = 1200 mm	TE20C314	TE20C314	Alloy	Spare part
	☐	1	Outer tube, L = 1500 mm	TE20C315	TE20C315	Alloy	Spare part
13		1	Bearing ring	TE20B510	TE20B510	Polymer	Wear part
14	☐	1	Inner shaft, L = 350 mm	TE20C538	TE20C538	Alloy	Spare part
	☐	1	Inner shaft, L = 500 mm	TE20C532	TE20C532	Alloy	Spare part
	☐	1	Inner shaft, L = 700 mm	TE20C533	TE20C533	Alloy	Spare part
	☐	1	Inner shaft, L = 1000 mm	TE20C534	TE20C534	Alloy	Spare part
	☐	1	Inner shaft, L = 1200 mm	TE20C535	TE20C535	Alloy	Spare part
	☐	1	Inner shaft, L = 1500 mm	TE20C536	TE20C536	Alloy	Spare part
15		1	Plain seal	TE20C511	TE20C511	FFKM	Wear part
16		1	Base housing			Alloy	*Note
17		1	Retaining screw	TE20B512	TE20B512	Stainless steel	Spare part
18		2	Gasket	TE20C516	TE20C516	FFKM	Wear part
19		1	Bearing bush	TE20B514	TE20B514	Polymer	Wear part
20		1	Bearing bush	TE20B513	TE20B513	Polymer	Wear part
21		1	O-ring	TE51T129		FFKM	Wear part
22		1	Plug	TE20C642		Alloy	Spare part
23		1	Bracket	TE24G594		Stainless steel	Spare part
24		3	Screw	TE51A172		Stainless steel	Spare part
59		-	Motor flange welded A	TE24C346	TE24C346-	Alloy	Spare part
60		1	Rotor outer complete	TE20C340	TE20C340	Alloy	Spare part
61		1	Inlet housing 1" Tri-clamp	TE24C351	TE24C351	Alloy	Spare part
62		1	Rotor inner w. magnets	TE20B343	TE20B343	Steel	Spare part
63		1	Tubular rivet	TE51C052	TE51C052	Stainless steel	Spare part
64		1	O-ring	TE51T142	TE51T142	Elastomer	Spare part
65		3	Straight connector	TE51U392	TE51U392	Brass, Nickel-pl.	Spare part
66		1	Flow control valve	TE51U395	TE51U395	Brass, Nickel-pl.	Spare part
67		3	L-connector	TE51U393	TE51U393	Brass, Nickel-pl.	Spare part
68		1	Flange for air motor	TE24B557	TE24B557	Polymer	Spare part
69		1	Adapter for air motor	TE24B556	TE24B556	Polymer	Spare part
70		1	Screw	TE51A096	TE51A096	Stainless steel	Spare part
71		1	O-ring	TE51T143	TE51T143	Elastomer	Spare part
72		6	Washer	TE51B013	TE51B013	Stainless steel	Spare part
73		4	Screw	TE51A097	TE51A097	Stainless steel	Spare part
74		1	Wire for grounding	TE24B353	TE24B353	Stainless steel/alu.	Spare part
75		2	Screw	TE51A112	TE51A112	Stainless steel	Spare part
76		2	Air tubing	TE51U397	TE51U397	Polymer	Spare part
77		2	L-connector	TE51U394	TE51U394	Brass, Nickel-pl.	Spare part
78		1	Air motor	TE51U009	TE51U009	Spare part	
79		1	Plug	TE51U396	TE51U396	Brass, Nickel-pl.	Spare part
80		3	Screw	TE51A100	TE51A100	Stainless steel	Spare part
81		1	Motor cover	TE24B348	TE24B348	Stainless steel	Spare part

Please note that some of the polymer parts are in PEEK, which is not resistant to concentrated sulfuric acid.

☐ Configuration according to delivery note/order

*Note: Pos. 16 is not sold as single Spare part component but only as part of a machine maintenance/repair order. For further information please contact Alfa Laval Customer Support.

1.5

Alfa Laval Toftejorg SaniJet 20, Air Driven - New Version

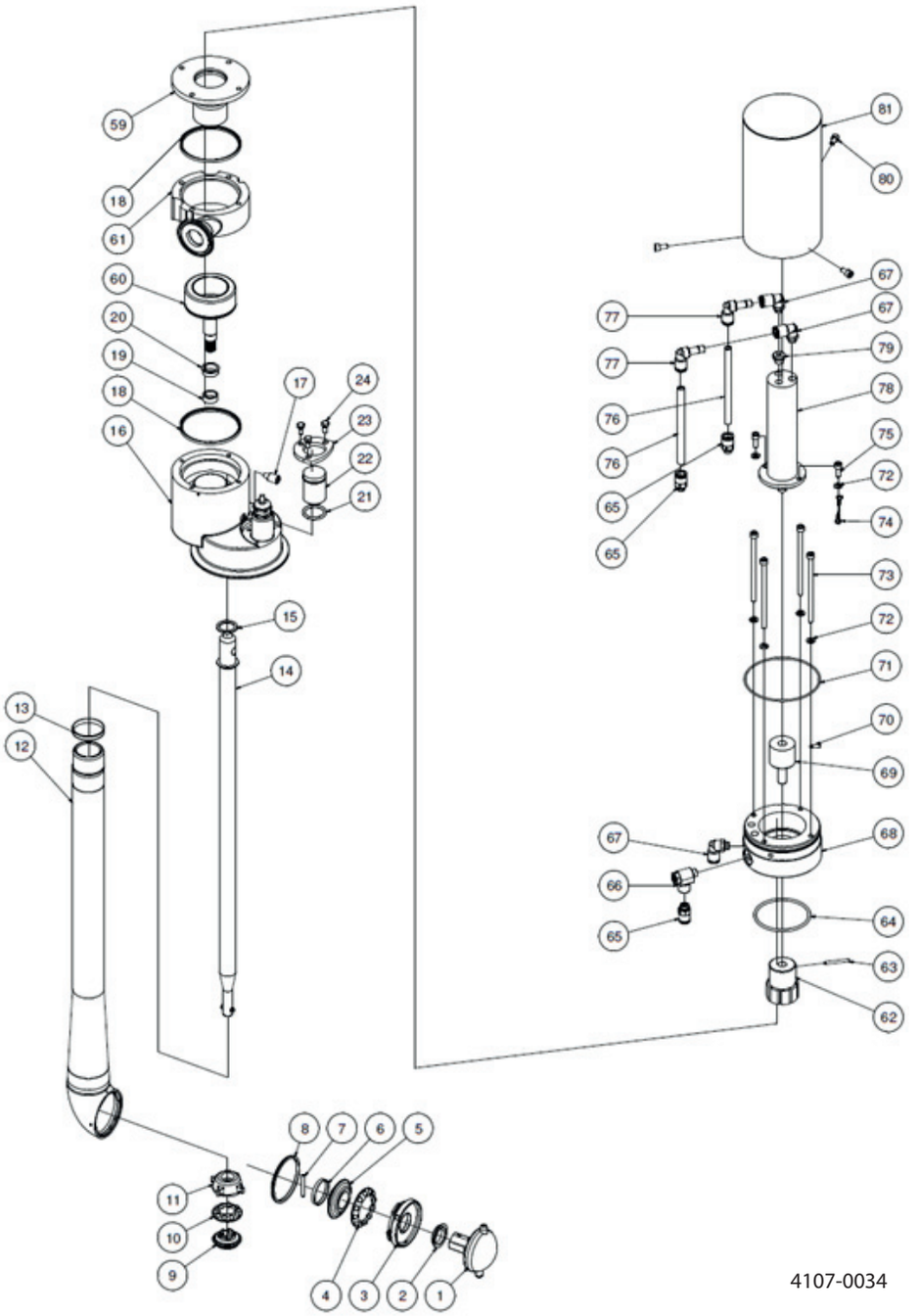

4107-0034

Pos		Qty	Denomination	Item no. for 4" version	Item no. for 3" version	Material	Remarks
Toftejorg SaniJet 20, Air Driven, Hastelloy version with improved surface finish (FFKM as standard)							
1	☐	1	Cleaner head 2xø2.0mm	TE24J334	TE24J334	Alloy	Spare part
	☐	1	Cleaner head 2xø3.8mm	TE24J335	TE24J335	Alloy	Spare part
	☐	1	Cleaner head 4xø4.2mm	TE24J336	TE24J336	Alloy	Spare part
2		1	Bearing bush	TE20B554	TE20B554	Polymer	Wear part
3		1	Retaining ring	TE24J552	TE24J552	Alloy	Wear part
4		1	Ball ring N	TE20C361	TE20C361	Polym./titan.	Wear part
5		1	Bevel gear	TE24J550	TE24J550	Alloy	Wear part
6		1	Clip ring	TE24J571	TE24J571	Alloy	Spare part
7		1	Pin	TE24J655	TE24J655	Alloy	Spare part
8		1	Seal ring H	TE20C553	TE20C553	FFKM	Wear part
9		1	Bevel gear	TE24J542	TE24J542	Alloy	Wear part
10		1	Ball ring	TE20C360	TE20C360	Polym./titan.	Wear part
11		1	Ball race	TE24J539	TE24J539	Alloy	Wear part
12	☐	1	Outer tube, L = 350 mm	TE24J310	TE24J310	Alloy	Spare part
	☐	1	Outer tube, L = 500 mm	TE24J311	TE24J311	Alloy	Spare part
	☐	1	Outer tube, L = 700 mm	TE24J312	TE24J312	Alloy	Spare part
	☐	1	Outer tube, L = 1000 mm	TE24J313	TE24J313	Alloy	Spare part
	☐	1	Outer tube, L = 1200 mm	TE24J314	TE24J314	Alloy	Spare part
	☐	1	Outer tube, L = 1500 mm	TE24J315	TE24J315	Alloy	Spare part
13		1	Bearing ring	TE20B510	TE20B510	Polymer	Wear part
14	☐	1	Inner shaft, L = 350 mm	TE24J538	TE24J538	Alloy	Spare part
	☐	1	Inner shaft, L = 500 mm	TE24J532	TE24J532	Alloy	Spare part
	☐	1	Inner shaft, L = 700 mm	TE24J533	TE24J533	Alloy	Spare part
	☐	1	Inner shaft, L = 1000 mm	TE24J534	TE24J534	Alloy	Spare part
	☐	1	Inner shaft, L = 1200 mm	TE24J535	TE24J535	Alloy	Spare part
	☐	1	Inner shaft, L = 1500 mm	TE24J536	TE24J536	Alloy	Spare part
15		1	Plain seal	TE20C511	TE20C511	FFKM	Wear part
16		1	Base housing			Alloy	*Note
17		1	Retaining screw	TE20B512	TE20B512	Stainless steel	Spare part
18		2	Gasket	TE20C516	TE20C516	FFKM	Wear part
19		1	Bearing bush	TE20B514	TE20B514	Polymer	Wear part
20		1	Bearing bush	TE20B513	TE20B513	Polymer	Wear part
21		1	O-ring	TE51T129	FFKM	Wear part	
22		1	Plug	TE24J642		Alloy	Spare part
23		1	Bracket	TE24F594		Stainless steel	Spare part
24		3	Screw	TE20E654		Stainless steel	Spare part
59		1	Motor flange welded A	TE24J346	TE24J346	Alloy	Spare part
60		1	Rotor outer complete	TE24J340	TE24J340	Alloy	Spare part
61		1	Inlet housing 1" Tri-clamp	TE24J351	TE24J351	Alloy	Spare part
62		1	Rotor inner w. magnets	TE20B343	TE20B343	Steel	Spare part
63		1	Tubular rivet	TE51C052	TE51C052	Stainless steel	Spare part
64		1	O-ring	TE51T142	TE51T142	Elastomer	Spare part
65		3	Straight connector	TE51U392	TE51U392	Brass, Nickel-pl.	Spare part
66		1	Flow control valve	TE51U395	TE51U395	Brass, Nickel-pl.	Spare part
67		3	L-connector	TE51U393	TE51U393	Brass, Nickel-pl.	Spare part
68		1	Flange for air motor	TE24B557	TE24B557	Polymer	Spare part
69		1	Adapter for air motor	TE24B556	TE24B556	Polymer	Spare part
70		1	Screw	TE51A096	TE51A096	Stainless steel	Spare part
71		1	O-ring	TE51T143	TE51T143	Elastomer	Spare part
72		6	Washer	TE51B013	TE51B013	Stainless steel	Spare part
73		4	Screw	TE51A097	TE51A097	Stainless steel	Spare part
74		1	Wire for grounding	TE24B353	TE24B353	Stainless steel/alu.	Spare part
75		2	Screw	TE51A112	TE51A112	Stainless steel	Spare part
76		2	Air tubing	TE51U397	TE51U397	Polymer	Spare part
77		2	L-connector	TE51U394	TE51U394	Brass, Nickel-pl.	Spare part
78		1	Air motor	TE51U009	TE51U009	Spare part	
79		1	Plug	TE51U396	TE51U396	Brass, Nickel-pl.	Spare part
80		3	Screw	TE51A100	TE51A100	Stainless steel	Spare part
81		1	Motor cover	TE24B348	TE24B348	Stainless steel	Spare part

Please note that some of the polymer parts are in PEEK, which is not resistant to concentrated sulfuric acid.

☐ Configuration according to delivery note/order

*Note: Pos. 16 is not sold as single Spare part component but only as part of a machine maintenance/repair order. For further information please contact Alfa Laval Customer Support.

1.5

Service intervals

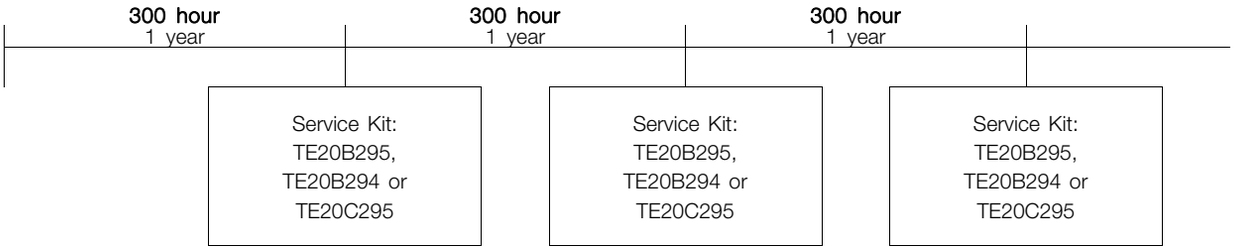

Pos	Qty	Denomination	Item no.
		Service Kit in EPDM for Toftejorg SaniJet 20 motor driven version (electrical/air)	TE20B295
Consisting of:			
13	1	Bearing ring, top	TE20B510
20	1	Bearing bush D1	TE20B513
19	1	Bearing bush D2	TE20B514
15	1	Plain seal S	TE20B511
18	2	Gasket D	TE20B516
8	1	Seal ring H	TE20B553
21	1	O-ring	TE51T127

Pos	Qty	Denomination	Item no.
		Service Kit in FPM (viton) for Toftejorg SaniJet 20 motor driven version (electrical/air)	TE20B294
Consisting of:			
13	1	Bearing ring, top	TE20B510
20	1	Bearing bush D1	TE20B513
19	1	Bearing bush D2	TE20B514
15	1	Plain seal S	TE20B51101
18	2	Gasket D	TE20B51601
8	1	Seal ring H	TE20B55301
21	1	O-ring	TE51T008

Pos	Qty	Denomination	Item no.
		Service Kit in Perlast for Toftejorg SaniJet 20 motor driven version (electrical/air)	TE20C295
Consisting of:			
13	1	Bearing ring, top	TE20B510
20	1	Bearing bush D1	TE20B513
19	1	Bearing bush D2	TE20B514
15	1	Plain seal S	TE20C511
18	2	Gasket D	TE20C516
8	1	Seal ring H	TE20C553
21	1	O-ring	TE51T129

Pos	Qty	Denomination	Item no.
Tools			
		Socket Wrench w. pin	TE462A
		Hook spanner	TE20B701

1.5

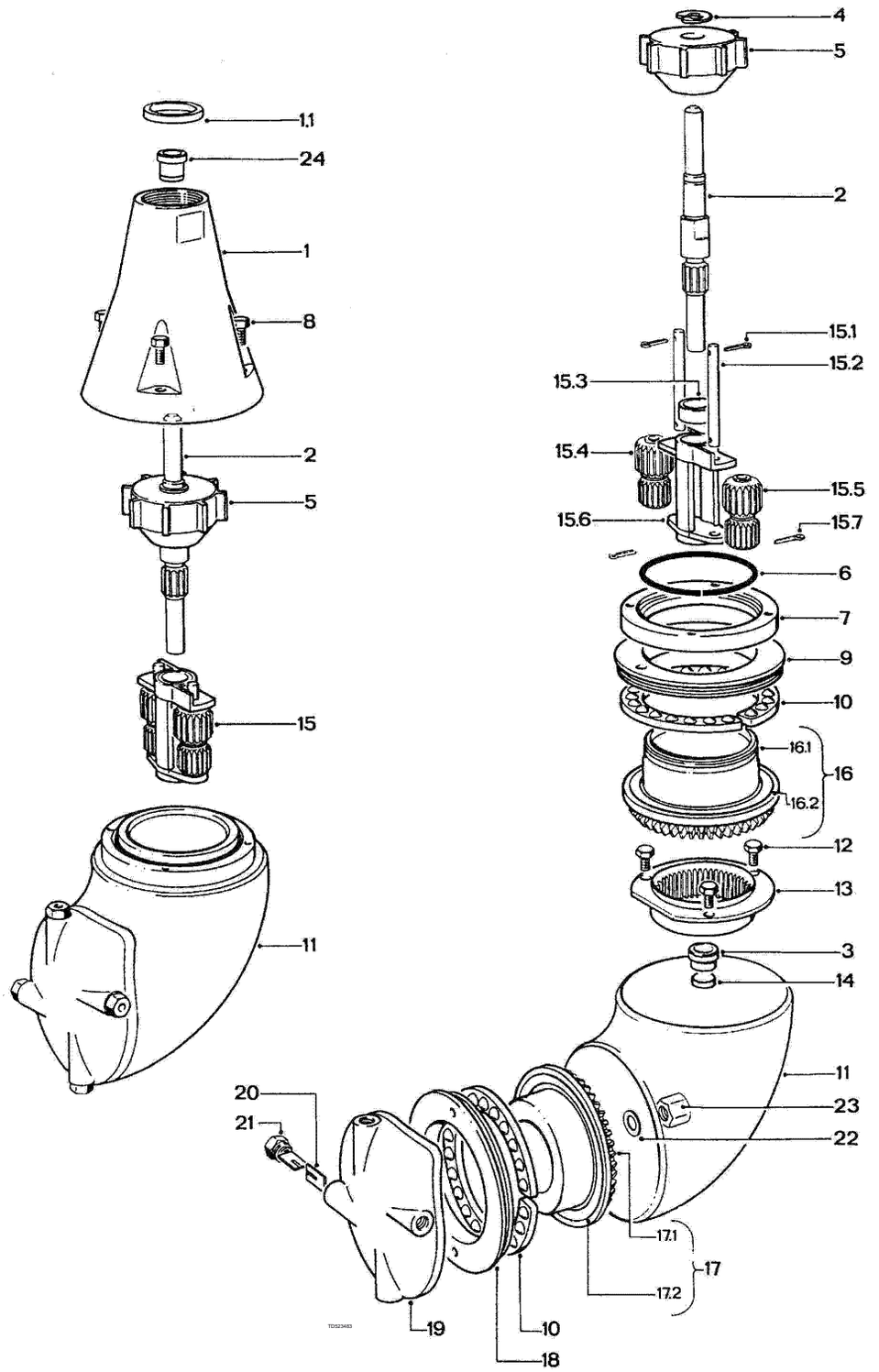
4
5
1.1
24
2
1
15.1
8
15.2
15.3
2
15.4
15.5
5
15.6
15.7
6
7
15
9
10
16.1
16
16.2
12
11
13
3
14
11
20
23
21
22
17.1
17
17.2
19
10
18

Parts list Toftejorg™ TJ20G,
TE20G010-TE20G014

Pos		Qty	Denomination	Item no.	Material	Remark
1		1	Cone 1" BSP hole f. split	TE20G503	Stainless steel	Spare part
2		1	Turbine shaft	TE20G550	Stainless steel	Spare part
3	◆○	1	Bearing for Turbine shaft	TE20G640	Polymer	Wear part
4		1	Circlip	TE51C201	Stainless steel	Spare part
5	□	1	Impeller, (ø3.5/3.9 mm nozzle)	TE20G553	Polymer (PVDF)	Spare part
	□	1	Impeller (ø4.5/4.6 mm nozzle)	TE20G554	Polymer (PVDF)	Spare part
	□	1	Impeller, (ø5.5 mm nozzle)	TE20G555	Polymer (PVDF)	Spare part
	□	1	Impeller, (ø3.5/3.9 mm nozzle)	TE20G595	Polymer (PEEK)	Spare part
	□	1	Impeller, (ø4.5/4.6 mm nozzle)	TE20G596	Polymer (PEEK)	Spare part
	□	1	Impeller, (ø5.5 mm nozzle)	TE20G597	Polymer (PEEK)	Spare part
6		1	Retainer spring	TE20G565	Stainless steel	Spare part
7		1	Retaining ring	TE20G563	Stainless steel	Spare part
8		4	Screw	TE51A172	Stainless steel	Spare part
9	○	1	Stem nut with ball race	TE20G571	Stainless steel	Wear part
10	○	2	Ball retainer with balls	TE20G318	Polymer/SS	Wear part
11		1	Body		Stainless steel	*Note
12		3	Screw	TE51A170	Stainless steel	Spare part
13		1	Internal gear	TE20G525	Stainless steel	Spare part
14	◆○	1	Slide bearing	TE20G641	Polymer	Wear part
15		1	Planet, complete	TE20G340	Assembly	Spare part
15.1	○	(2)	Cotter pin	TE51C102	Stainless steel	Spare part
15.2		(2)	Shaft for Planet wheel	TE20G541	Stainless steel	Spare part
15.3	◆○	(1)	Bearing for planet gear carrier	TE20G642	Polymer	Wear part
15.4	◆○	(1)	Planet wheel I	TE20G643	Polymer	Wear part
15.5	◆○	(1)	Planet wheel II	TE20G644	Polymer	Wear part
15.6		(1)	Planet gear carrier	TE20G530	Stainless steel	Spare part
15.7		(2)	Cotter pin (= 15.1)	TE51C102	Stainless steel	Spare part
16		1	Stem, complete	TE20G319	Assembly	Spare part
16.1		(1)	Stem	TE20G624	Stainless steel	Spare part
16.2	○	(1)	Ball race	TE20G574	Stainless steel	Wear part
17		1	Hub, complete	TE20G320	Assembly	Spare part
17.1		(1)	Hub	TE20G625	Stainless steel	Spare part
17.2	○	(1)	Ball race (= 16.2)	TE20G574	Stainless steel	Wear part
18	○	1	Hub nut with ball race	TE20G573	Stainless steel	Wear part
19		1	Hub cover		Stainless steel	**Note
		1	Hub cover secured with vanes and logo	TE20G392	Stainless steel	Spare part
20		8	Nozzle vane	TE20G594	Stainless steel	Spare part
21	□	4	Nozzle, ø3.9 mm	TE20G608	Stainless steel	Spare part
	□	4	Nozzle, ø4.6 mm	TE20G609	Stainless steel	Spare part
	□	4	Nozzle, ø5.5 mm	TE20G605	Stainless steel	Spare part
22	◆○	1	Washer	TE20G584	Stainless steel	Wear part
23		(1)	Cap nut (part of pos. 19)	TE51A521	Stainless steel	Spare part
24	◆○	1	Bearing for turbine shaft top	TE20G548	Polymer	Wear part
26		1	Split pin	TE51C105	Stainless steel	Spare part
27		1	Lock pin	TE11B536	Stainless steel	Spare part
28		1	Spring pin	TE52D549	Stainless steel	Spare part

Service kits

Minor service kit	TE20G290
Major service kit	TE20G292

Parts marked with ◆ are included in the Minor Service Kit standard: TE20G290
Parts marked with ○ are included in the Major Service Kit standard: TE20G292

The machine can be delivered with ATEX/IECEx certification.
□ Configuration according to delivery note/order.
*Note: Position 11 is not sold as single Spare part component. Only sold as part of a machine maintenance/repair order. For further information please contact Alfa Laval Customer Support.
**Note position 19: For machine maintenance/repair, please order item no. TE20G390.

1.5

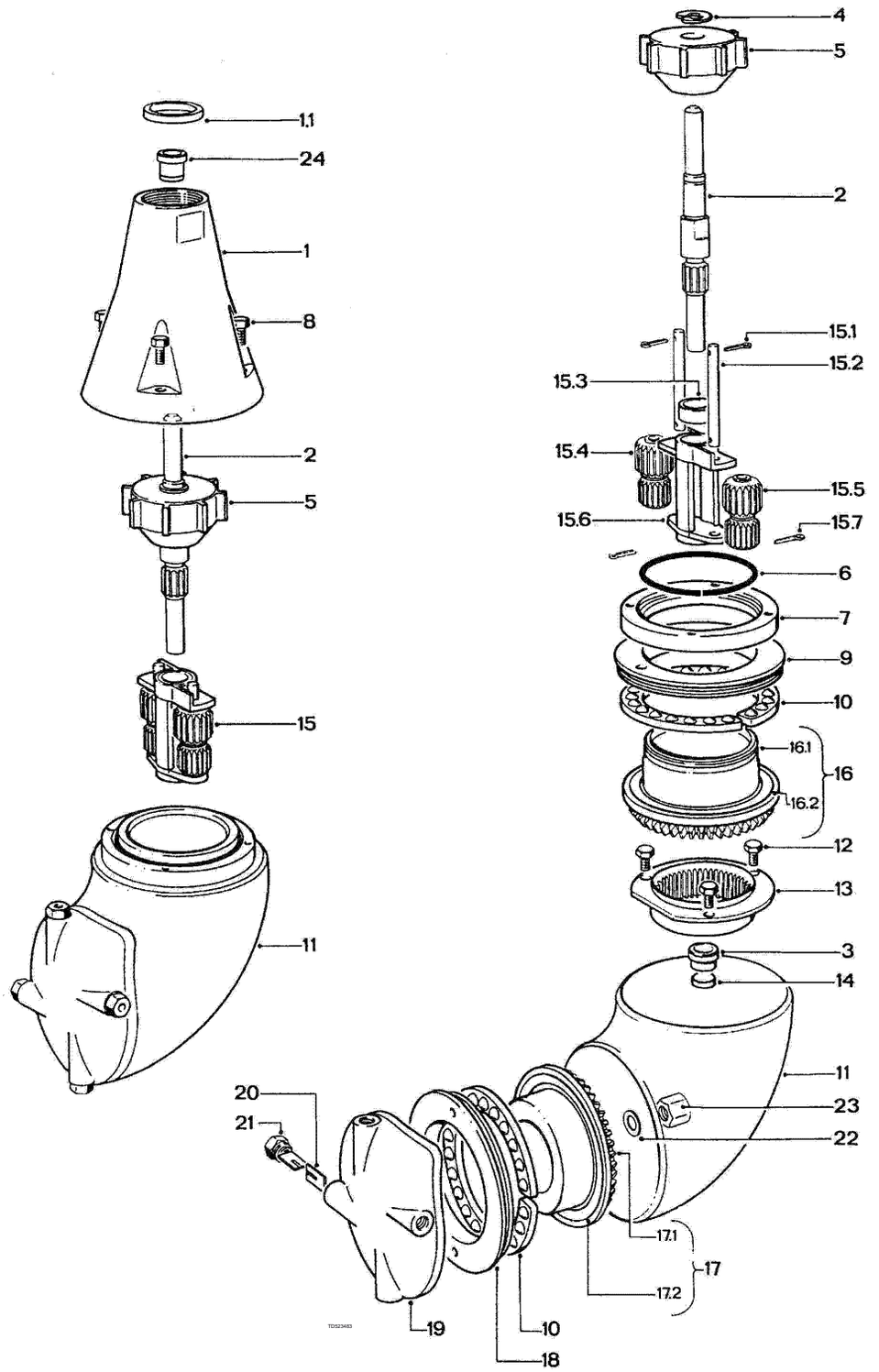
4
5
1.1
24
2
1
15.1
8
15.2
15.3
2
15.4
15.5
5
15.6
15.7
6
7
15
9
10
16.1
16
16.2
12
11
13
3
14
11
20
23
21
22
17.1
17
17.2
19
10
18

Parts list Toftejorg™ TJ20G,
TE20G000_024 + TE20G050_054 (except TE20G010-TE20G018)

Pos		Qty	Denomination	Item no.	Material	Remark
1	□	1	Cone, 1" BSP	TE20G508	Stainless steel	Spare part
	□	1	Cone, 1" NPT	TE20G517	Stainless steel	Spare part
	□	1	Cone, 1" BSP f. sanitary conn.	TE20G518	Stainless steel	Spare part
1.1	□	1	Gasket (only for some versions), (only f. TE20G518)	TE51T212	Elastomer	Spare part
2		1	Turbine shaft	TE20G550	Stainless steel	Spare part
3	◆○	1	Bearing for Turbine shaft	TE20G640	Polymer	Wear part
4		1	Circlip	TE51C201	Stainless steel	Spare part
5	□	1	Impeller, (ø3.5/3.9 mm nozzle)	TE20G553	Polymer (PVDF)	Spare part
	□	1	Impeller (ø4.5/4.6 mm nozzle)	TE20G554	Polymer (PVDF)	Spare part
	□	1	Impeller, (ø5.5 mm nozzle)	TE20G555	Polymer (PVDF)	Spare part
	□	1	Impeller, (ø3.5/3.9 mm nozzle)	TE20G595	Polymer (PEEK)	Spare part
	□	1	Impeller, (ø4.5/4.6 mm nozzle)	TE20G596	Polymer (PEEK)	Spare part
	□	1	Impeller, (ø5.5 mm nozzle)	TE20G597	Polymer (PEEK)	Spare part
6		1	Retainer spring	TE20G565	Stainless steel	Spare part
7		1	Retaining ring	TE20G563	Stainless steel	Spare part
8		4	Screw	TE51A172	Stainless steel	Spare part
9	○	1	Stem nut with ball race	TE20G571	Stainless steel	Wear part
10	○	2	Ball retainer with balls	TE20G318	Polymer/SS	Wear part
11		1	Body		Stainless steel	*Note
12		3	Screw	TE51A170	Stainless steel	Spare part
13		1	Internal gear	TE20G525	Stainless steel	Spare part
14	◆○	1	Slide bearing	TE20G641	Polymer	Wear part
15		1	Planet, complete	TE20G340	Assembly	Spare part
15.1	○	2	Cotter pin	TE51C102	Stainless steel	Spare part
15.2		2	Shaft for Planet wheel	TE20G541	Stainless steel	Spare part
15.3	◆○	1	Bearing for planet gear carrier	TE20G642	Polymer	Wear part
15.4	◆○	1	Planet wheel I	TE20G643	Polymer	Wear part
15.5	◆○	1	Planet wheel II	TE20G644	Polymer	Wear part
15.6		1	Planet gear carrier	TE20G530	Stainless steel	Spare part
15.7		2	Cotter pin (= 15.1)	TE51C102	Stainless steel	Spare part
16		1	Stem, complete	TE20G319	Assembly	Spare part
16.1		(1)	Stem	TE20G624	Stainless steel	Spare part
16.2	○	(1)	Ball race	TE20G574	Stainless steel	Wear part
17		1	Hub, complete	TE20G320	Assembly	Spare part
17.1		(1)	Hub	TE20G625	Stainless steel	Spare part
17.2	○	(1)	Ball race (= 16.2)	TE20G574	Stainless steel	Wear part
18	○	1	Hub nut with ball race	TE20G573	Stainless steel	Wear part
19	□	1	Hub cover		Stainless steel	**Note
	□	1	Hub cover with vanes and logo	TE20G390	Stainless steel	Spare part
20		8	Nozzle vane	TE20G594	Stainless steel	Spare part
21	□	4	Nozzle, ø3.9 mm	TE20G608	Stainless steel	Spare part
	□	4	Nozzle, ø4.6 mm	TE20G609	Stainless steel	Spare part
	□	4	Nozzle, ø5.5 mm	TE20G605	Stainless steel	Spare part
22	◆○	1	Washer	TE20G584	Stainless steel	Wear part
23		1	Cap nut	TE51A521	Stainless steel	Spare part
24	◆○	1	Bearing for turbine shaft top	TE20G548	Polymer	Wear part

Service kits

Minor service kit	TE20G290
Major service kit	TE20G292

Parts marked with ◆ are included in the Minor Service Kit standard: TE20G290
Parts marked with ○ are included in the Major Service Kit standard: TE20G292

The machine can be delivered with ATEX/IECEx certification.
□ Configuration according to delivery note/order.
*Note: Position 11 is not sold as single Spare part component. Only sold as part of a machine maintenance/repair order. For further information please contact Alfa Laval Customer Support.
**Note position 19: For machine maintenance/repair, please order item no. TE20G390.

1.5

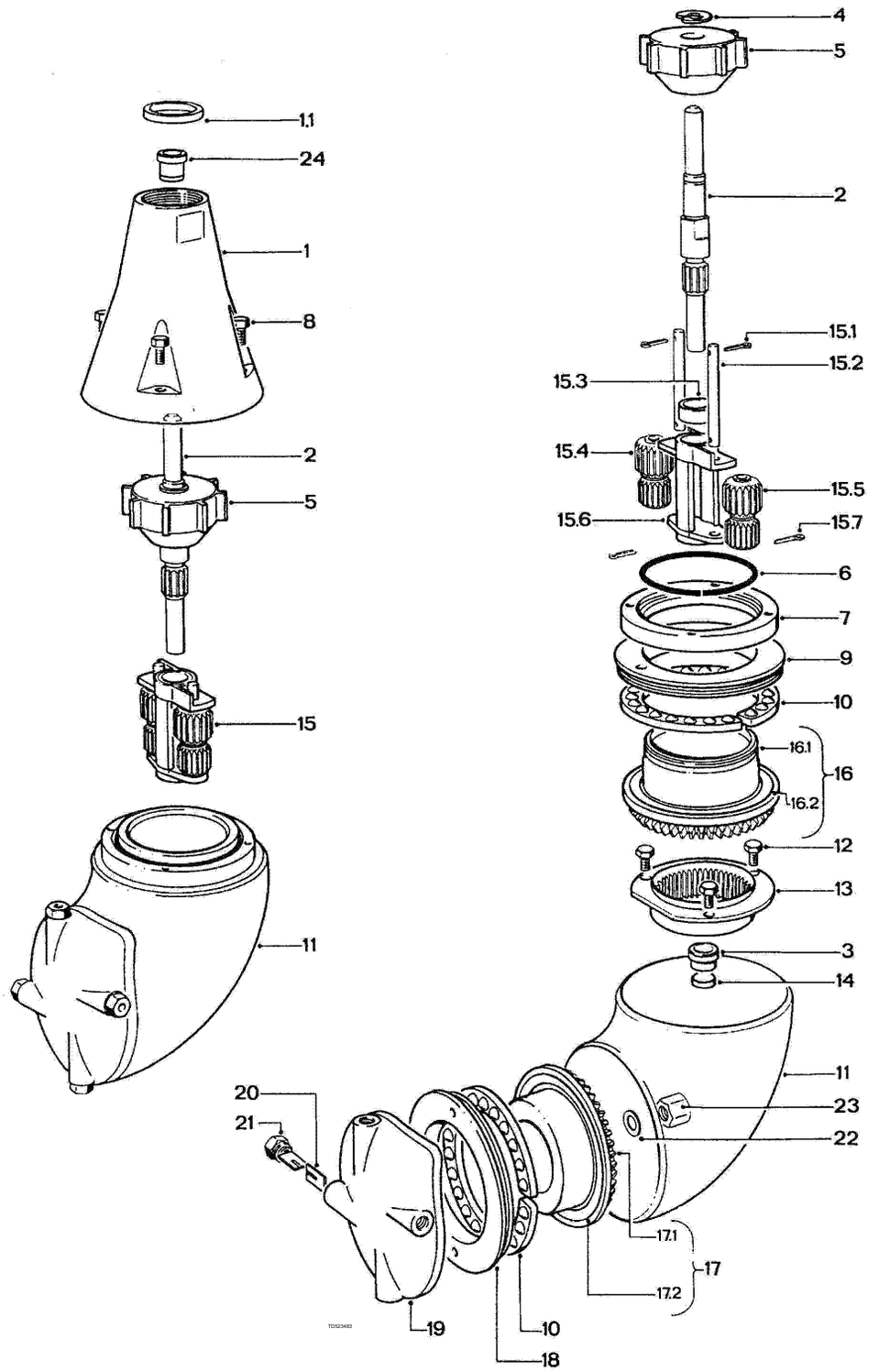
4
5
1.1
24
2
1
15.1
8
15.2
15.3
2
15.4
15.5
5
15.6
15.7
6
7
15
9
10
16.1
16
16.2
12
13
11
3
14
11
20
23
21
22
17.1
17
17.2
19
10
18

Parts list Toftejorg™ TJ20G,
TE20G016-TE20G018

Pos		Qty	Denomination	Item no.	Material	Remark
1		1	Cone 1" BSP	TE20G508	Stainless steel	Spare part
2		1	Turbine shaft	TE20G550	Stainless steel	Spare part
3	✧●	1	Bearing for Turbine shaft	TE20G640	Polymer	Wear part
4		1	Circlip	TE51C201	Stainless steel	Spare part
5	□	1	Impeller, (ø3.5/3.9 mm nozzle)	TE20G553	Polymer (PVDF)	Spare part
	□	1	Impeller (ø4.5/4.6 mm nozzle)	TE20G554	Polymer (PVDF)	Spare part
	□	1	Impeller, (ø5.5 mm nozzle)	TE20G555	Polymer (PVDF)	Spare part
	□	1	Impeller, (ø3.5/3.9 mm nozzle)	TE20G595	Polymer (PEEK)	Spare part
	□	1	Impeller, (ø4.5/4.6 mm nozzle)	TE20G596	Polymer (PEEK)	Spare part
	□	1	Impeller, (ø5.5 mm nozzle)	TE20G597	Polymer (PEEK)	Spare part
6		1	Retainer spring	TE20G565	Stainless steel	Spare part
7		1	Retaining ring	TE20G563	Stainless steel	Spare part
8		4	Screw	TE51A172	Stainless steel	Spare part
9	●	1	Stem nut with ball race	TE20G571	Stainless steel	Wear part
10	●	2	Ball retainer with balls	TE20G318	Polymer/SS	Wear part
11		1	Body		Stainless steel	*Note
12		3	Screw	TE51A170	Stainless steel	Spare part
13		1	Internal gear	TE20G525	Stainless steel	Spare part
14	✧●	1	Slide bearing	TE20G641	Polymer	Wear part
15		1	Planet, complete	TE20G340	Assembly	Spare part
15.1	●	(2)	Cotter pin	TE51C102	Stainless steel	Spare part
15.2		(2)	Shaft for Planet wheel	TE20G541	Stainless steel	Spare part
15.3	✧●	(1)	Bearing for planet gear carrier	TE20G642	Polymer	Wear part
15.4	✧●	(1)	Planet wheel I	TE20G643	Polymer	Wear part
15.5	✧●	(1)	Planet wheel II	TE20G644	Polymer	Wear part
15.6		(1)	Planet gear carrier	TE20G530	Stainless steel	Spare part
15.7		(2)	Cotter pin (= pos. 15.1)	TE51C102	Stainless steel	Spare part
16		1	Stem, complete	TE20G319	Assembly	Spare part
16.1		(1)	Stem	TE20G624	Stainless steel	Spare part
16.2	●	(1)	Ball race	TE20G574	Stainless steel	Wear part
17		1	Hub, complete	TE20G320	Assembly	Spare part
17.1		(1)	Hub	TE20G625	Stainless steel	Spare part
17.2	●	(1)	Ball race (= pos. 16.2)	TE20G574	Stainless steel	Wear part
18	●	1	Hub nut with ball race	TE20G573	Stainless steel	Wear part
19		1	Hub cover		Stainless steel	**Note
		1	Hub cover with vanes and logo	TE20G390	Stainless steel	Spare part
20		8	Nozzle vane	TE20G594	Stainless steel	Spare part
21	□	4	Nozzle, ø3.9 mm	TE20G608	Stainless steel	Spare part
	□	4	Nozzle, ø4.6 mm	TE20G609	Stainless steel	Spare part
	□	4	Nozzle, ø5.5 mm	TE20G605	Stainless steel	Spare part
22	✧●	1	Washer w/o EPDM	TE51B021	Stainless steel	Wear part
23		1	Cap nut	TE51A521	Stainless steel	Spare part
24	✧●	1	Bearing for turbine shaft top	TE20G548	Polymer	Wear part

Service kits

Minor service kit	TE20G291
Major service kit	TE20G293

Parts marked with ✧ are included in the Minor Service Kit no-EPDM version: TE20G291
Parts marked with ● are included in the Major Service Kit no-EPDM version: TE20G293

The machine can be delivered with ATEX/IECEx certification.
□ Configuration according to delivery note/order.
*Note: Position 11 is not sold as single Spare part component. Only sold as part of a machine maintenance/repair order. For further information please contact Alfa Laval Customer Support.
**Note position 19: For machine maintenance/repair, please order item no. TE20G390.

1.5

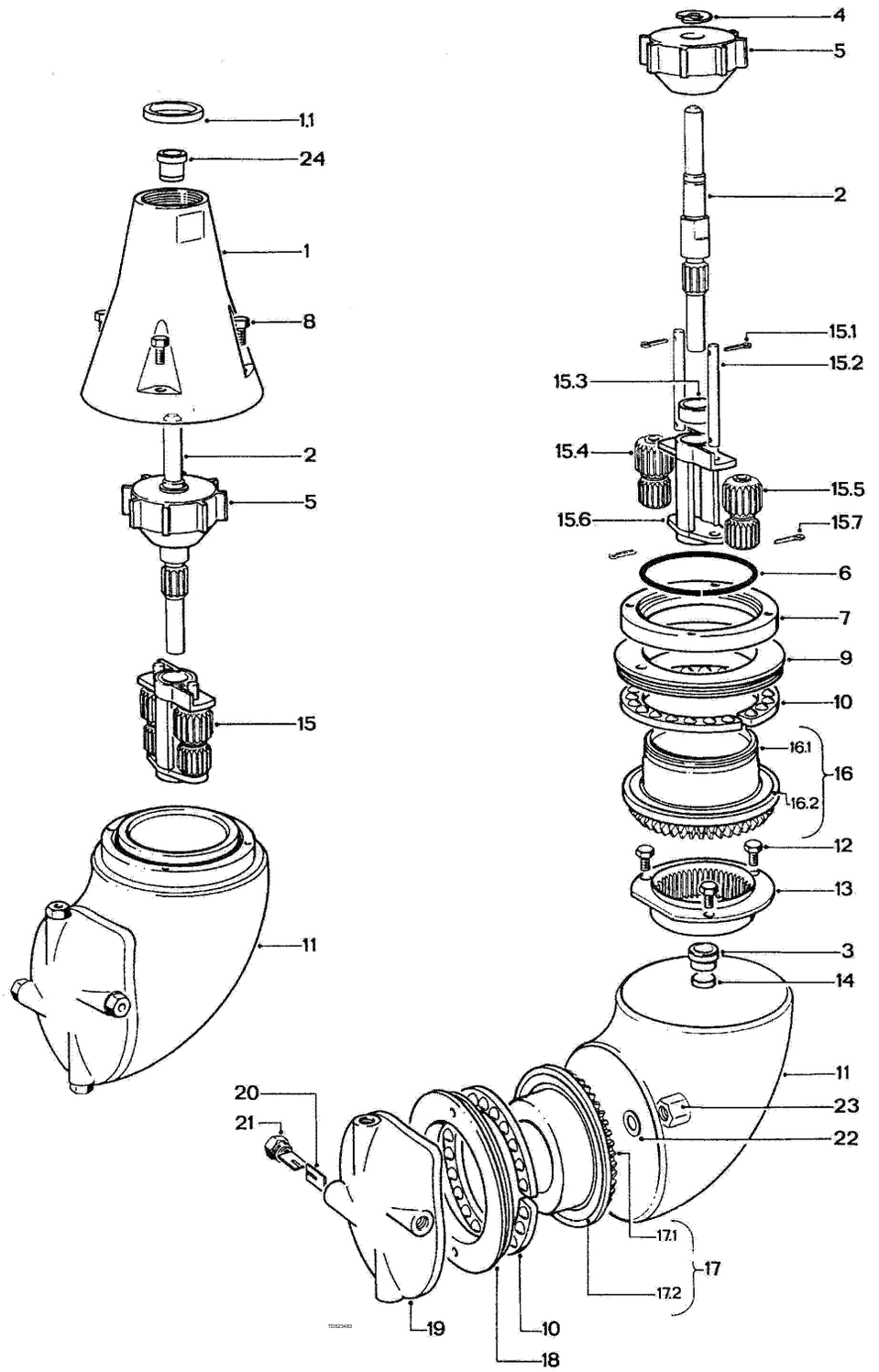
4
5
1.1
24
2
1
8
15.1
15.2
15.3
2
15.4
15.5
5
15.6
15.7
6
7
15
9
10
16.1
16
16.2
12
11
13
3
14
11
20
23
21
22
17.1
17
17.2
19
10
18

Parts list Toftejorg™ TJ20G,
TE20G030-TE20G044

Pos		Qty	Denomination	Item no.	Material	Remark
1	□	1	Cone, 1"" BSP	TE20G508	Stainless steel	Spare part
	□	1	Cone, 1" NPT	TE20G517	Stainless steel	Spare part
2		1	Turbine shaft	TE20G550	Stainless steel	Spare part
3	◆⊙	1	Bearing for Turbine shaft	TE20G640	Polymer	Wear part
4		1	Circlip	TE51C201	Stainless steel	Spare part
5	□	1	Impeller, (ø3.5/3.9 mm nozzle)	TE20G553	Polymer (PVDF)	Spare part
	□	1	Impeller (ø4.5/4.6 mm nozzle)	TE20G554	Polymer (PVDF)	Spare part
	□	1	Impeller, (ø5.5 mm nozzle)	TE20G555	Polymer (PVDF)	Spare part
	□	1	Impeller, (ø3.5/3.9 mm nozzle)	TE20G595	Polymer (PEEK)	Spare part
	□	1	Impeller, (ø4.5/4.6 mm nozzle)	TE20G596	Polymer (PEEK)	Spare part
	□	1	Impeller, (ø5.5 mm nozzle)	TE20G597	Polymer (PEEK)	Spare part
6		1	Retainer spring	TE20G565	Stainless steel	Spare part
7		1	Retaining ring	TE20G563	Stainless steel	Spare part
8		4	Screw	TE51A172	Stainless steel	Spare part
9	⊙	1	Stem nut with ball race	TE20G636	Stainless steel	Wear part
10	⊙	2	Ball retainer with balls	TE20G318	Polymer/SS	Wear part
11		1	Body		Stainless steel	**Note
12		3	Screw	TE51A170	Stainless steel	Spare part
13		1	Internal gear	TE20G525	Stainless steel	Spare part
14	◆⊙	1	Slide bearing	TE20G641	Polymer	Wear part
15		1	Planet, complete	TE20G340	Assembly	Spare part
15.1	⊙	(2)	Cotter pin	TE51C102	Stainless steel	Spare part
15.2		(2)	Shaft for Planet wheel	TE20G541	Stainless steel	Spare part
15.3	◆⊙	(1)	Bearing for planet gear carrier	TE20G642	Polymer	Wear part
15.4	◆⊙	(1)	Planet wheel I	TE20G643	Polymer	Wear part
15.5	◆⊙	(1)	Planet wheel II	TE20G644	Polymer	Wear part
15.6		(1)	Planet gear carrier	TE20G530	Stainless steel	Spare part
15.7		(2)	Cotter pin (= pos. 15.1)	TE51C102	Stainless steel	Spare part
16		1	Stem, complete	TE20G334	Assembly	Spare part
16.1		(1)	Stem	TE20G634	Stainless steel	Spare part
16.2	⊙	(1)	Ball race	TE20G574	Stainless steel	Wear part
17		1	Hub, complete	TE20G335	Assembly	Spare part
17.1		(1)	Hub	TE20G635	Stainless steel	Spare part
17.2	⊙	(1)	Ball race (= pos. 16.2)	TE20G574	Stainless steel	Wear part
18	⊙	1	Hub nut with ball race	TE20G633	Stainless steel	Wear part
19		1	Hub cover		Stainless steel	**Note
		1	Hub cover with vanes and logo	TE20G390	Stainless steel	Spare part
20		8	Nozzle vane	TE20G594	Stainless steel	Spare part
21	□	4	Nozzle, ø3.9 mm	TE20G608	Stainless steel	Spare part
	□	4	Nozzle, ø4.6 mm	TE20G609	Stainless steel	Spare part
	□	4	Nozzle, ø5.5 mm	TE20G605	Stainless steel	Spare part
22	◆⊙	1	Washer	TE20G584	Polymer/SS	Wear part
23		1	Cap nut	TE51A521	Stainless steel	Spare part
24	◆⊙	1	Bearing for turbine shaft top	TE20G548	Polymer	Wear part

Service kits

Minor service kit	TE20G290
Major service kit	TE20G294

Parts marked with ◆ are included in the Minor Service Kit standard: TE20G290
Parts marked with ⊙ are included in the Major Service Kit Distillery version: TE20G294

The machine can be delivered with ATEX/IECEx certification.
□ Configuration according to delivery note/order.
*Note: Position 11 is not sold as single spare part component. Only sold as part of a machine maintenance/repair order. For further information please contact Alfa Laval Customer Support.
**Note position 19: For machine maintenance/repair, please order item no. TE20G390.

1.5

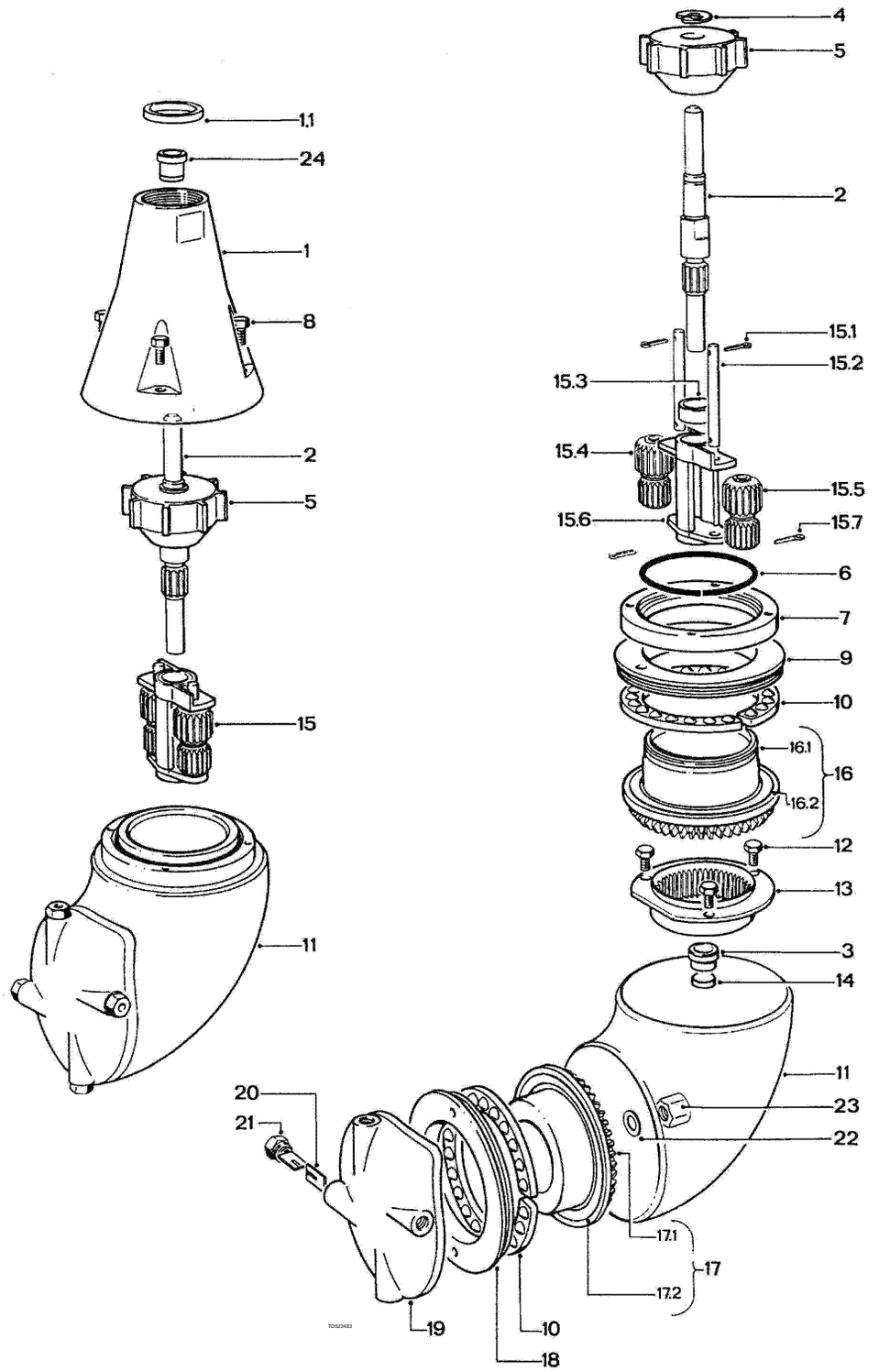
4
5
1.1
24
2
1
15.1
8
15.2
15.3
2
15.4
15.5
5
15.6
15.7
6
7
15
9
10
16.1
16
16.2
12
11
13
3
14
11
20
23
21
22
17.1
17
17.2
19
10
18

Parts list Toftejorg™ TJ20G Hastelloy
TE20HXXX

Pos		Qty	Denomination	Item no.	Material	Remark
1		1	Cone, 1" BSP	TE20H508	Hastelloy C22	Spare part
		1	Cone, 1" NPT	TE20H517	Hastelloy C22	Spare part
		1	Cone, 1" BSP f. sanitary conn.	TE20H518	Hastelloy C22	Spare part
2		1	Turbine shaft	TE20H550	Hastelloy C22	Spare part
3	◆✪	1	Bearing for Turbine shaft	TE20G640	Polymer	Wear part
4		1	Circlip	TE20H592	Hastelloy C22	Spare part
5		1	Impeller, (ø3.9 mm nozzle)	TE20G595	Polymer (PEEK)	Spare part
		1	Impeller, (ø4.6 mm nozzle)	TE20G596	Polymer (PEEK)	Spare part
		1	Impeller, (ø5.5 mm nozzle)	TE20G597	Polymer (PEEK)	Spare part
6		1	Retainer spring	TE20H565	Hastelloy C22	Spare part
7		1	Retaining ring	TE20H563	Hastelloy C22	Spare part
8		4	Screw	TE20H591	Hastelloy C22	Spare part
9	✪	1	Stem nut with ball race	TE20H571	Hastelloy C22	Wear part
10	✪	2	Ball retainer with balls	TE20H318	Polymer/hastelloy C276	Wear part
11		1	Body		Hastelloy C22	*Note
12		3	Screw	TE20H590	Hastelloy C22	Spare part
13		1	Internal gear	TE20H525	Hastelloy C22	Spare part
14	◆✪	1	Slide bearing	TE20G641	Polymer	Wear part
15		1	Planet, complete	TE20H340	Assembly	Spare part
15.1	✪	(2)	Cotter pin	TE20H542	Hastelloy C22	Spare part
15.2		(2)	Shaft for Planet wheel	TE20H541	Hastelloy C22	Spare part
15.3	◆✪	(1)	Bearing for planet gear carrier	TE20G642	Polymer	Wear part
15.4	◆✪	(1)	Planet wheel I	TE20G643	Polymer	Wear part
15.5	◆✪	(1)	Planet wheel II	TE20G644	Polymer	Wear part
15.6		(1)	Planet gear carrier	TE20H530	Hastelloy C22	Spare part
15.7		(2)	Cotter pin (= pos. 15.1)	TE20H542	Hastelloy C22	Spare part
16		1	Stem, complete	TE20H319	Assembly	Spare part
16.1		(1)	Stem	TE20H624	Hastelloy C22	Spare part
16.2	✪	(1)	Ball race	TE20H574	Hastelloy C22	Wear part
17		1	Hub, complete	TE20H320	Assembly	Spare part
17.1		(1)	Hub	TE20H625	Hastelloy C22	Spare part
17.2	✪	(1)	Ball race (= pos. 16.2)	TE20H574	Hastelloy C22	Wear part
18	✪	1	Hub nut with ball race	TE20H573	Hastelloy C22	Wear part
19	□	1	Hub cover		Hastelloy C22	**Note
	□	1	Hub cover with vanes and logo	TE20H390	Hastelloy C22	Spare part
20		8	Nozzle vane	TE20H594	Hastelloy C22	Spare part
21	□	4	Nozzle, ø3.9 mm	TE20H608	Hastelloy C22	Spare part
	□	4	Nozzle, ø4.6 mm	TE20H609	Hastelloy C22	Spare part
	□	4	Nozzle, ø5.5 mm	TE20H605	Hastelloy C22	Spare part
22		1	Washer for Cap nut, TJ20G	TE20H587	Hastelloy C22	Spare part
23		1	Cap nut	TE20H585	Hastelloy C22	Spare part
24	◆	1	Bearing for turbine shaft top	TE20G548	Hastelloy C22	Wear part
25		1	O-ring	TE20H586	Elastomer	Spare part

Service kits

Minor service kit	TE20G290
Major service kit	TE20H29290

Parts marked with ◆ are included in the Minor Service Kit standard: TE20G290
Parts marked with μ are included in the Major Service Kit standard: TE20H29290

The machine can be delivered with ATEX/IECEx certification.
❑ Configuration according to delivery note/order.
*Note: Position 11 is not sold as single Spare part component. Only sold as part of a machine maintenance/repair order. For further information please contact Alfa Laval Customer Support.
**Note position 19: For machine maintenance/repair, please order item no. TE20G390.

1.5

Service intervals

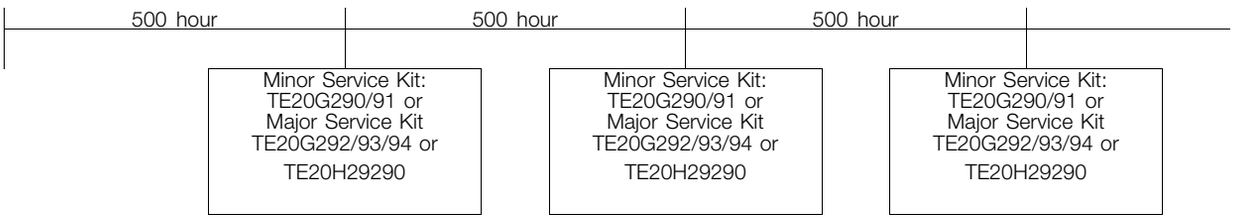

NOTE
The service intervals are recommended on the basis of pure liquids. When liquids contain particles and other kind of abrasives, we recommend shorter service intervals depending on the actual running conditions.

Pos	Qty	Denomination	Item no.
Minor service kits			
		Minor Service kit for TJ20G - - all models except TE20G016_018 (see below)	TE20G290
Consisting of:			
	1	Bearing for turbine shaft, top	TE20G548
	1	Washer, ø8mm w.seal	TE20G584
	1	Bearing for Turbine shaft	TE20G640
	1	Slide bearing	TE20G641
	1	Bearing for Planet gear carrier	TE20G642
	1	Planet wheel	TE20G643
	1	Planet wheel	TE20G644

Pos	Qty	Denomination	Item no.
		Minor Service kit for TJ20G - models TE20G016_018	TE20G291
Consisting of:			
	1	Bearing for turbine shaft, top	TE20G548
	1	Bearing for Turbine shaft	TE20G640
	1	Slide bearing	TE20G641
	1	Bearing for Planet gear carrier	TE20G642
	1	Planet wheel	TE20G643
	1	Planet wheel	TE20G644
	1	Washer	TE51B021

Pos	Qty	Denomination	Item no.
Major service kits			
		Major Service kit for TJ20G - all models except TE20G016_018 and TE20G030_044 (see below)	TE20G292
Consisting of:			
	2	Ball retainer w. balls	TE20G318
	1	Bearing for turbine shaft, top	TE20G548
	1	Stem nut with Ball race	TE20G571
	1	Hub nut with Ball race	TE20G573
	2	Ball race	TE20G574
	1	Washer	TE20G584
	1	Bearing for Turbine shaft	TE20G640
	1	Slide bearing	TE20G641
	1	Bearing for Planet gear carrie	TE20G642
	1	Planet wheel	TE20G643
	1	Planet wheel	TE20G644
	2	Cotter pin	TE51C102

Pos	Qty	Denomination	Item no.
		Major Service kit for TJ20G - models TE20G016_018 (no-EPDM version)	TE20G293
Consisting of:			
	1	Bearing for Turbine shaft top	TE20G548
	1	Stem nut with ball race	TE20G571
	1	Hub nut with ball race	TE20G573
	2	Ball race	TE20G574
	1	Slide bearing	TE20G641
	1	Bearing for Planet Gear carr.	TE20G642
	1	Planet wheel I	TE20G643
	1	Planet wheel II	TE20G644
	1	Washer	TE51B021
	2	Cotter pin	TE51C102

1.5

Service intervals

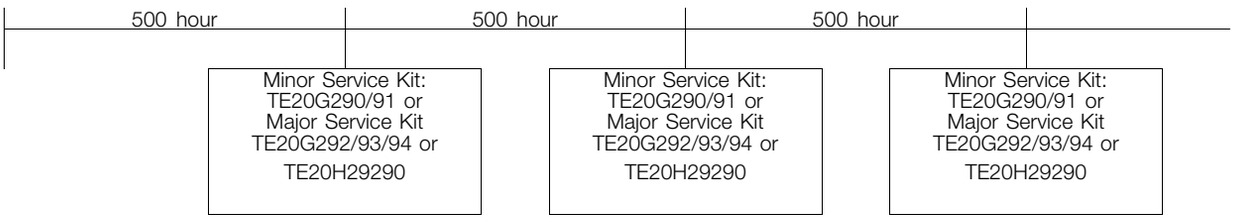

NOTE
The service intervals are recommended on the basis of pure liquids. When liquids contain particles and other kind of abrasives, we recommend shorter service intervals depending on the actual running conditions.

Pos	Qty	Denomination	Item no.
Major service kits			
		Major Service kit for TJ20G - - models TE20G030_044 (Distillery version)	TE20G294
Consisting of:			
	1	Bearing for Turbine shaft top	TE20G548
	2	Ball race	TE20G574
	1	Washer	TE20G584
	1	Hub nut with ball race	TE20G633
	1	Stem nut with ball race	TE20G636
	1	Slide bearing	TE20G641
	1	Bearing for Planet Gear carr.	TE20G642
	1	Planet wheel I	TE20G643
	1	Planet wheel II	TE20G644
	2	Cotter pin	TE51C102

Pos	Qty	Denomination	Item no.
		Major Service kit for TJ20G - - models TE20HXXX (Hastelloy version)	TE20H29290
Consisting of:			
	1	Bearing for Turbine shaft	TE20G640
	1	Slide bearing	TE20G641
	1	Bearing for Planet Gear carr.	TE20G642
	1	Planet wheel I	TE20G643
	1	Planet wheel II	TE20G644
	2	Ball retainer with balls	TE20H318
	2	Cotter pin	TE20H542
	1	Stem nut with ball race	TE20H571
	1	Hub nut with ball race	TE20H573
	2	Ball race	TE20H574

Pos	Qty	Denomination	Item no.
Tools			
		Standard Tool Kit for Toftejorg TJ20G	TE81B085
Consisting of:			
		Caliper	TE369
		Socket wrench w. pin	TE462A
		Spanner for Toftejorg TJ20G	TE81B040
		Spanner	TE81B041

Additional tool available on request

		Fixture tool kit for body	TE20J386

Pos	Qty	Denomination	Item no.
		Torque wrench tool kit	TE81B087
Consisting of.			
		Torque wrench with interchangeable ratchet head	9611995916
		Ring insert tool for torque wrench	9611995918

1.5

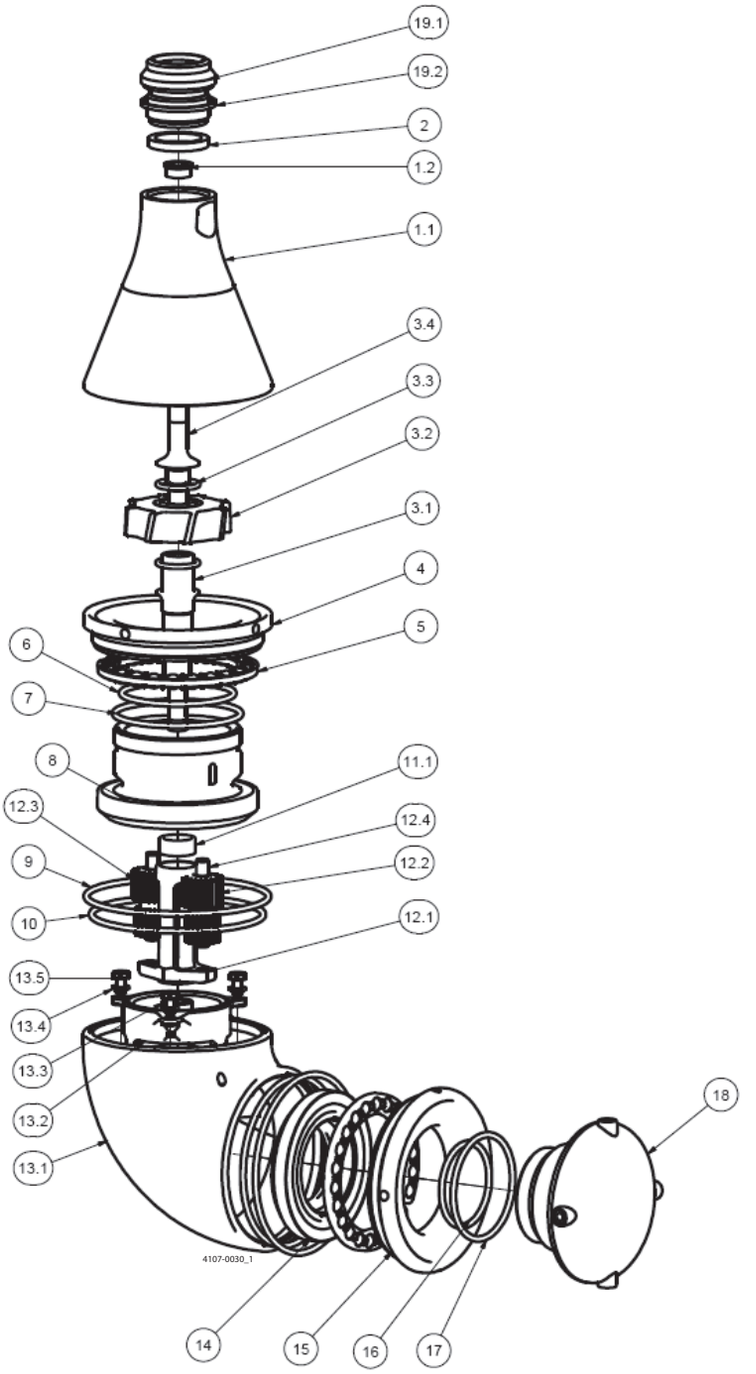
19.1
19.2
2
1.2
1.1
3.4
3.3
3.2
3.1
4
5
6
7
8
11.1
12.3
12.4
9
12.2
10
12.1
13.5
13.4
13.3
13.2
13.1
18
4107-0030_1
14
15
16
17

Pos	Qty	Denomination	Article no.	Materials	Remarks
Reference List of Parts, Alfa Laval Toftejorg SaniJet 25					
For machines with -0x and -7x (after August 2012)					
1.1	1	Cone	TE20J510	Stainless steel	Spare part
1.2 ○	1	Bushing	TE20J514	Polymer	Wear part
2 ○✧●	1	Gasket	TE51T212	Elastomer	Wear part
3.1	1	Impeller Shaft	TE20J540	Stainless steel	Spare part
3.2 □	1	Impeller, (ø4.2mm nozzle)	TE20J544	Polymer	Spare part
□	1	Impeller, (ø5.2mm nozzle)	TE20J545	Polymer	Spare part
□	1	Impeller, (ø6.2mm nozzle)	TE20J546	Polymer	Spare part
3.3 ○✧●	2	O-ring	TE51T135	Elastomer	Wear part
3.4	1	Shaft end	TE20J542	Stainless steel	Spare part
4	1	Nut for stem	TE20J627	Stainless steel	Wear part
5 ○	2	Ball retainer with balls	TE20G318	Polymer/Stainless steel	Wear part
6 ○✧●	1	O-ring	TE51T138	Elastomer	Wear part
7 ○✧●	1	O-ring	TE51T139	Elastomer	Wear part
8	1	Stem	TE20J624	Stainless steel	Wear part
9 ○✧●	2	O-ring	TE51T141	Elastomer	Wear part
10 ○✧●	2	O-ring	TE51T140	Elastomer	Wear part
11.1	1	Bushing	TE20J521	Polymer	Wear part
12	1	Planet gear	TE20J515	Polymer/Stainless steel	Wear part
13.1	1	Body, [1]		Stainless steel	N/A
13.2	1	Gear ring	TE20J506	Stainless steel	Spare part
13.3○	1	Bearing for body	TE20J508	Polymer	Wear part
13.4	6	Seal ring	TE20J509	Polymer	Spare part
13.5	3	Screw for body assembly	TE20J550	Stainless steel	Spare part
14	1	Bevel gear	TE20J522	Stainless steel	Wear part
15	1	Nut for hub	TE20J638	Stainless steel	Wear part
16 ○✧●	1	O-ring	TE51T136	Elastomer	Wear part
17 ○✧●	1	O-ring	TE51T137	Elastomer	Wear part
18 □	1	Nozzle head, (ø4.2mm nozzle)	TE20J320	Stainless steel	Spare part
□	1	Nozzle head, (ø5.2mm nozzle)	TE20J321	Stainless steel	Spare part
□	1	Nozzle head, (ø6.2mm nozzle)	TE20J322	Stainless steel	Spare part
19.1□	1	Welding adaptor, (1½" Dairy)	TE52D552	Stainless steel	Spare part
□	1	Welding adaptor, (1" ANSI/Sch40)	TE52D554	Stainless steel	Spare part
□	1	Welding adaptor, (NW40)	TE52D556	Stainless steel	Spare part
□	1	Welding adaptor, (1½" BPE US/SWG)	TE52D558	Stainless steel	Spare part
19.2○✧●	1	Gasket	TE52D561	Polymer	Wear part

[1]: Pos. 13.1 is not sold as single Spare part component but only as part of a machine maintenance/repair order. For further information please contact Alfa Laval Customer Support.
Please note that some of the polymer parts are in PEEK, which is not resistant to concentrated sulfuric acid.

Service kits

✧	**Inspection kit**	**TE20J297**	**TE20J29790***
○	**Minor service kit**	**TE20J298**	**TE20J29890***
●	**Major service kit**	**TE20J299**	**TE20J29990***

□ Configuration according to delivery note/order.

Parts marked with ✧ are included in the Inspection Kit: TE20J297 & TE20J29790*
Parts marked with ○ are included in the Minor Service Kit: TE20J298 & TE20J29890*
Parts marked with ● are included in the Major Service Kit: TE20J299 & TE20J29990*

The machine can be delivered with ATEX/IECEx certification.
*With Q-Doc

1.5

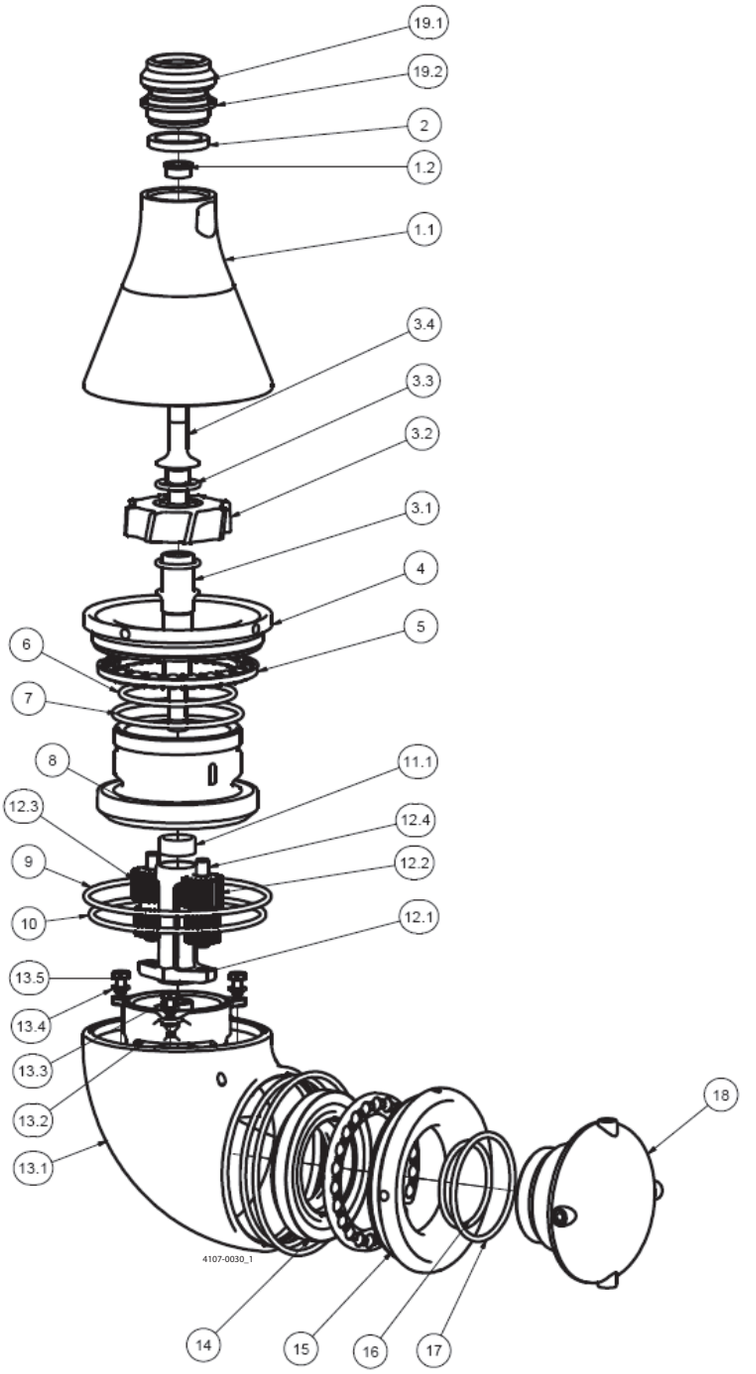
19.1
19.2
2
1.2
1.1
3.4
3.3
3.2
3.1
4
5
6
7
8
11.1
12.3
12.4
9
12.2
10
12.1
13.5
13.4
13.3
13.2
13.1
18
4107-0030_1
14
15
16
17

Pos	Qty	Denomination	Article no.	Materials	Remarks
Parts list, Toftejorg SaniJet 25					
For machines with -5x, -6x, -8x and -9x (after August 2012)					
1.1	1	Cone	TE20J510	Stainless steel	Spare part
1.2 ○⊙	1	Bushing	TE20J514	Polymer	Wear part
2 ○●⊙	1	Gasket	TE51T212	Elastomer	Wear part
3.1	1	Impeller Shaft	TE20J540	Stainless steel	Spare part
3.2 □	1	Impeller, (ø4.2mm nozzle)	TE20J544	Polymer	Spare part
□	1	Impeller, (ø5.2mm nozzle)	TE20J545	Polymer	Spare part
□	1	Impeller, (ø6.2mm nozzle)	TE20J546	Polymer	Spare part
3.3 ○●⊙	2	O-ring	TE51T135	Elastomer	Wear part
3.4	1	Shaft end	TE20J542	Stainless steel	Spare part
4	1	Nut for stem	TE20J627	Stainless steel	Wear part
5 ○⊙	2	Ball retainer with balls	TE20G318	Polymer/Stainless steel	Wear part
6 ○●⊙	1	O-ring	TE51T194	Elastomer	Wear part
7 ○●⊙	1	O-ring	TE51T139	Elastomer	Wear part
8	1	Stem	TE20J624	Stainless steel	Wear part
9 ○●⊙	2	O-ring	TE51T196	Elastomer	Wear part
10 ○●⊙	2	O-ring	TE51T195	Elastomer	Wear part
11.1	1	Bushing	TE20J521	Polymer	Wear part
12	1	Planet gear	TE20J515	Polymer/Stainless steel	Wear part
13.1	1	Body, [1)]		Stainless steel	N/A
13.2	1	Gear ring	TE20J506	Stainless steel	Spare part
13.3○⊙	1	Bearing for body	TE20J508	Polymer	Wear part
13.4	6	Seal ring	TE20J509	Polymer	Spare part
13.5	3	Screw for body assembly	TE20J550	Stainless steel	Spare part
14	1	Bevel gear	TE20J522	Stainless steel	Wear part
15	1	Nut for hub	TE20J638	Stainless steel	Wear part
16 ○●⊙	1	O-ring	TE51T192	Elastomer	Wear part
17 ○●⊙	1	O-ring	TE51T193	Elastomer	Wear part
18 □	1	Nozzle head, (ø4.2mm nozzle)	TE20J320	Stainless steel	Spare part
□	1	Nozzle head, (ø5.2mm nozzle)	TE20J321	Stainless steel	Spare part
□	1	Nozzle head, (ø6.2mm nozzle)	TE20J322	Stainless steel	Spare part
19.1□	1	Welding adaptor, (1½" Dairy)	TE52D552	Stainless steel	Spare part
□	1	Welding adaptor, (1" ANSI/Sch40)	TE52D554	Stainless steel	Spare part
□	1	Welding adaptor, (NW40)	TE52D556	Stainless steel	Spare part
□	1	Welding adaptor, (1½" BPE US/SWG)	TE52D558	Stainless steel	Spare part
19.2○●⊙	1	Gasket	TE52D561	Polymer	Wear part

[1)]: Pos. 13.1 is not sold as single spare part component but only as part of a machine maintenance/repair order. For further information please contact Alfa Laval Customer Support.
Please note that some of the polymer parts are in PEEK, which is not resistant to concentrated sulfuric acid.

Service kits

Inspection kit*	TE20J29701
Minor service kit*	TE20J29801
Major service kit*	TE20J29901

□ Configuration according to delivery note/order.

Parts marked with ● are included in the Inspection Kit: TE20J29701*
Parts marked with⊙ are included in the Minor Service Kit: TE20J29801*
Parts marked with ○are included in the Major Service Kit: TE20J29901*

* with Q-Doc and USP VI certificate

The machine can be delivered with ATEX/IECEx certification.

1.5

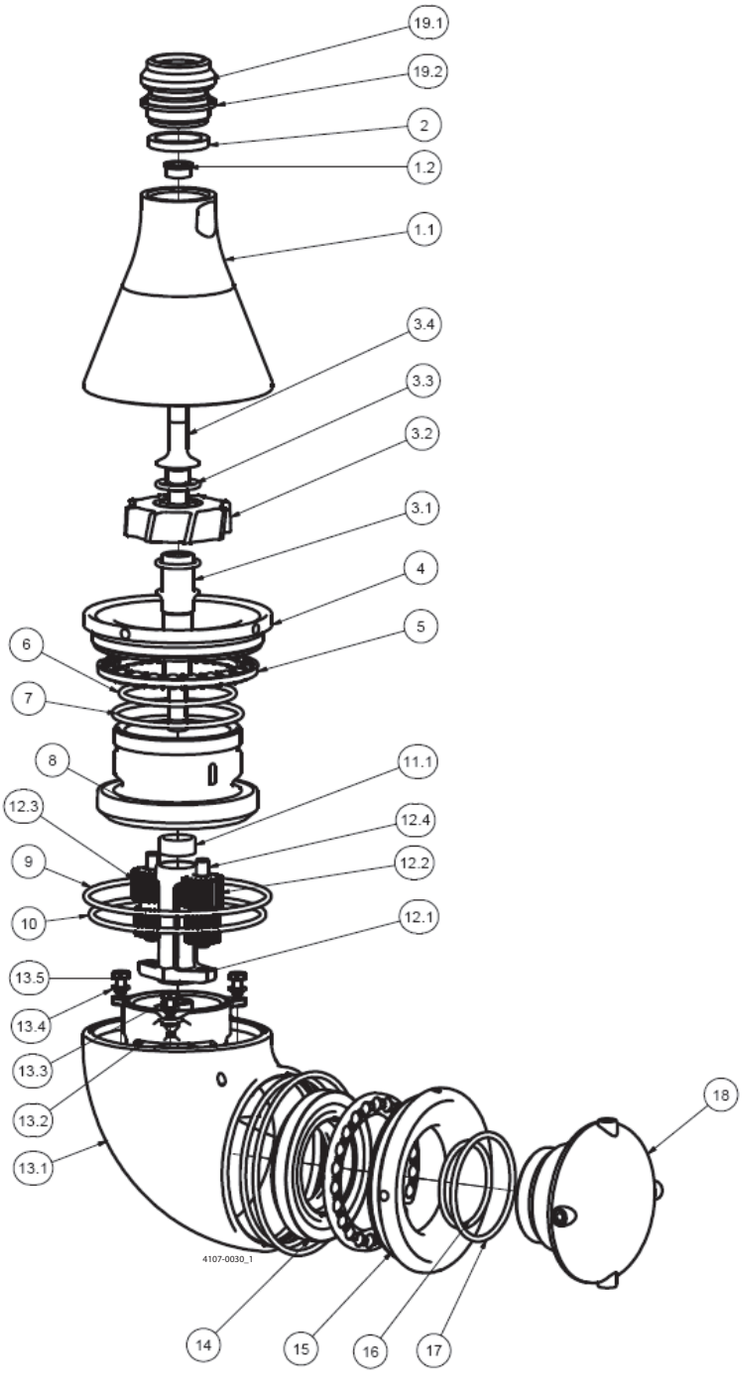
19.1
19.2
2
1.2
1.1
3.4
3.3
3.2
3.1
4
5
6
7
8
11.1
12.3
12.4
9
12.2
10
12.1
13.5
13.4
13.3
13.2
13.1
18
4107-0030_1
14
15
16
17

Pos	Qty	Denomination	Article no.	Materials	Remarks
Reference List of Parts, Alfa Laval Toftejorg SaniJet 25 FFKM					
1.1	1	Cone	TE20J510	Stainless steel	Spare part
1.2 ○✪	1	Bushing	TE20J514	Polymer	Wear part
2 ◆○✪	1	Gasket	9690011301	Elastomer (FFKM)	Wear part
3.1	1	Impeller Shaft	TE20J540	Stainless steel	Spare part
3.2 □	1	Impeller, (ø4.2mm nozzle)	TE20J544	Polymer	Spare part
□	1	Impeller, (ø5.2mm nozzle)	TE20J545	Polymer	Spare part
□	1	Impeller, (ø6.2mm nozzle)	TE20J546	Polymer	Spare part
3.3 ◆○✪	2	O-ring	9690010501	Elastomer (FFKM)	Wear part
3.4	1	Shaft end	TE20J542	Stainless steel	Spare part
4 ○	1	Nut for stem	TE20J627	Stainless steel	Wear part
5 ○✪	2	Ball retainer with balls	TE20G318	Polymer/Stainless steel	Wear part
6 ◆○✪	1	O-ring	9690010701	Elastomer (FFKM)	Wear part
7 ◆○✪	1	O-ring	9690010601	Elastomer (FFKM)	Wear part
8 ○	1	Stem	TE20J624	Stainless steel	Wear part
9 ◆○✪	2	O-ring	9690010801	Elastomer (FFKM)	Wear part
10 ◆○✪	2	O-ring	9690010901	Elastomer (FFKM)	Wear part
11.1○	1	Bushing	TE20J521	Polymer	Wear part
12 ○	1	Planet gear	TE20J515	Polymer/Stainless steel	Wear part
13.1	1	Body, [1]		Stainless steel	N/A
13.2	1	Gear ring	TE20J506	Stainless steel	Spare part
13.3○✪	1	Bearing for body	TE20J508	Polymer	Wear part
13.4	6	Seal ring	TE20J509	Polymer	Spare part
13.5	3	Screw for body assembly	TE20J550	Stainless steel	Spare part
14 ○	1	Bevel gear	TE20J522	Stainless steel	Wear part
15 ○	1	Nut for hub	TE20J638	Stainless steel	Wear part
16 ◆○✪	1	O-ring	9690011001	Elastomer (FFKM)	Wear part
17 ◆○✪	1	O-ring	9690011101	Elastomer (FFKM)	Wear part
18 □	1	Nozzle head, (ø4.2mm nozzle)	TE20J320	Stainless steel	Spare part
□	1	Nozzle head, (ø5.2mm nozzle)	TE20J321	Stainless steel	Spare part
□	1	Nozzle head, (ø6.2mm nozzle)	TE20J322	Stainless steel	Spare part
19.1□	1	Welding adaptor, (1½" Dairy)	TE52D552	Stainless steel	Spare part
□	1	Welding adaptor, (1"ANSI/Sch40)	TE52D554	Stainless steel	Spare part
□	1	Welding adaptor, (NW40)	TE52D556	Stainless steel	Spare part
□	1	Welding adaptor, (1½"BPE US/SWG)	TE52D558	Stainless steel	Spare part
19.2◆○✪	1	Gasket	TE52D561	Polymer	Wear part

[1]: Pos. 13.1 is not sold as single spare part component but only as part of a machine maintenance/repair order. For further information please contact Alfa Laval Customer Support.
Please note that some of the polymer parts are in PEEK, which is not resistant to concentrated sulfuric acid.

Service kits

Inspection kit*	9690012601
Minor service kit*	9690012702
Major service kit*	9690012802

□ Configuration according to delivery note/order.

Parts marked with ◆ are included in the Inspection Kit: 9690012601*
Parts marked withμ are included in the Minor Service Kit: 9690012702*
Parts marked with ○are included in the Major Service Kit: 9690012802*

* with Q-Doc and USP VI certificate

The machine can be delivered with ATEX/IECEx certification.

1.5

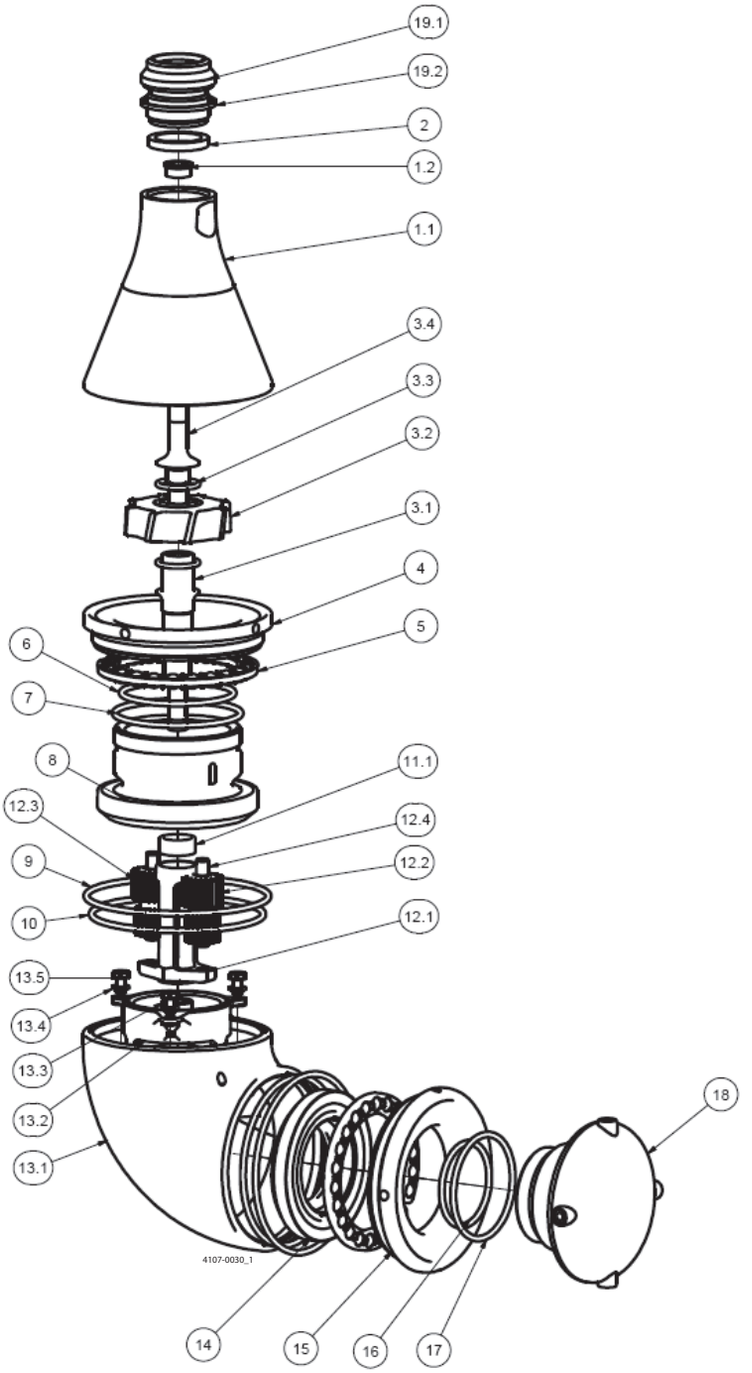

Exploded view drawing

Pos	Qty	Denomination	Article no.	Materials	Remarks
Reference List of Parts, Alfa Laval Toftejorg SaniJet 25 Duplex FFKM					
1.1	1	Cone, welded	9690008401	SD Steel[2)]	Spare part
1.2 ○✪	1	Bushing	TE20J514	Polymer	Wear part
2 ♦○✪	1	Gasket, f. 1" cones, Sani. Con.	9690011301	FFKM	Wear part
3.1	1	Impeller Shaft	9690009601	SD Steel[2)]	Spare part
3.2 □	1	Impeller, (ø4.2mm nozzle)	TE20J544	Polymer	Spare part
□	1	Impeller, (ø5.2mm nozzle)	TE20J545	Polymer	Spare part
□	1	Impeller, (ø6.2mm nozzle)	TE20J546	Polymer	Spare part
3.3 ♦○✪	2	O-ring	9690010501	FFKM	Wear part
3.4	1	Shaft end	9690008501	SD Steel[2)]	Spare part
4 ○	1	Nut for stem	9690008601	SD Steel[2)]	Wear part
5 ○✪	2	Ball retainer with balls	TE20H318	Polymer/hastelloy	Wear part
6 ♦○✪	1	O-ring	9690010701	FFKM	Wear part
7 ♦○✪	1	O-ring	9690010601	FFKM	Wear part
8 ○	1	Stem	9690009801	SD Steel[2)]	Wear part
9 ♦○✪	2	O-ring	9690010801	FFKM	Wear part
10 ♦○✪	2	O-ring	9690010901	FFKM	Wear part
11.1○	1	Bushing	TE20J521	Polymer	Wear part
12 ○	1	Planet gear assembly	9690012901	Polymer/SD Steel[2)]	Wear part
13.1	1	Body, [1)]		SD Steel[2)]	N/A
13.2	1	Gear ring	9690010001	SD Steel[2)]	Spare part
13.3○✪	1	Bearing for body	TE20J508	Polymer	Wear part
13.4	6	Seal ring	TE20J509	Polymer	Spare part
13.5	3	Screw for body assembly	9690008901	SD Steel[2)]	Spare part
14 ○	1	Bevel gear	9690010201	SD Steel[2)]	Wear part
15 ○	1	Nut for hub	9690009001	SD Steel[2)]	Wear part
16 ♦○✪	1	O-ring	9690011001	FFKM	Wear part
17 ♦○✪	1	O-ring	9690011101	FFKM	Wear part
18 □	1	Nozzle head, (ø4.2mm nozzle)	9690010301	SD Steel[2)]	Spare part
□	1	Nozzle head, (ø5.2mm nozzle)	9690010302	SD Steel[2)]	Spare part
□	1	Nozzle head, (ø6.2mm nozzle)	9690010303	SD Steel[2)]	Spare part
19.1□	1	Welding adapter, 1"BSP/1½"BPE pipe compl.	9690011201	SD Steel[2)]	Spare part
□	1	Welding adapter, Welding adaptor 1"BSP/1½"BPE pipe	9690009101	SD Steel[2)]	Spare part
19.2♦○✪	1	Gasket	TE52D561	Polymer	Wear part

[1)]: Pos. 13.1 is not sold as single Spare part component but only as part of a machine maintenance/repair order. For further information please contact Alfa Laval Customer Support.

[2)]: SD Steel = Super Duplex Steel.

Please note that some of the polymer parts are in PEEK, which is not resistant to concentrated sulfuric acid.

Service kits

Inspection kit*	9690012601
Minor service kit*	9690012701
Major service kit*	9690012801

❑ Configuration according to delivery note/order.

Parts marked with ♦ are included in the Inspection Kit: 9690012601*
Parts marked withμ are included in the Minor Service Kit: 9690012701*
Parts marked with ○are included in the Major Service Kit: 9690012801*

* with Q-Doc and USP VI certificate

The machine can be delivered with ATEX/IECEx certification.

1.5

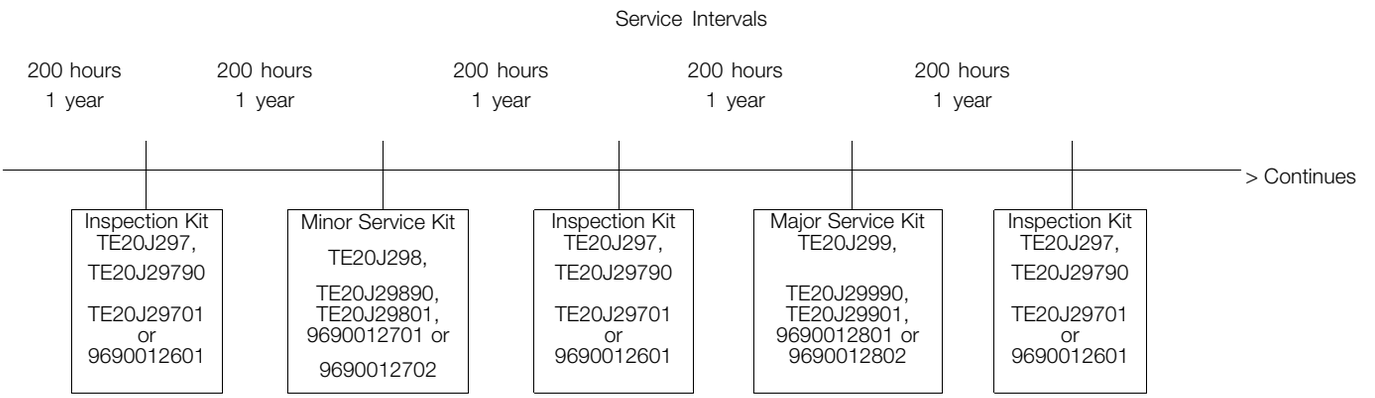

NOTE
The service intervals are recommended on the basis of pure liquids. When liquids contain particles and other kind of abrasives, we recommend shorter service intervals depending on the actual running conditions.

Pos	Qty	Denomination	SJ25	SJ25**	SJ25 UP*	Duplex FFKM/SS FFKM
		Inspection Kit f. Toftejorg SaniJet 25	TE20J297	TE20J29790	TE20J29701*)	9690012601*)
Consisting of:						
2	1	Gasket	TE51T212	TE51T212	TE51T212	9690011301
3.3	2	O-ring	TE51T135	TE51T135	TE51T135	9690010501
6	1	O-ring	TE51T138	TE51T138	TE51T194	9690010701
7	1	O-ring	TE51T139	TE51T139	TE51T139	9690010601
9	2	O-ring	TE51T141	TE51T141	TE51T196	9690010801
10	2	O-ring	TE51T140	TE51T140	TE51T195	9690010901
16	1	O-ring	TE51T136	TE51T136	TE51T192	9690011001
17	1	O-ring	TE51T137	TE51T137	TE51T193	9690011101
19.2	1	Gasket	TE52D561	TE52D561	TE52D561	TE52D561

Pos	Qty	Denomination	SJ25	SJ25**	SJ25 UP*	Duplex FFKM	SS FFKM
		Minor Service Kit f. Toftejorg SaniJet 25	TE20J298	TE20J29890	TE20J29801*)	9690012701*)	9690012702*)
Consisting of:							
1.2	1	Bushing	TE20J514	TE20J514	TE20J514	TE20J514	TE20J514
5	2	Ball retainer with balls	TE20G318	TE20G318	TE20G318	TE20H318	TE20G318
13.3	1	Bearing for body	TE20J508	TE20J508	TE20J508	TE20J508	TE20J508
-	1	Inspection Kit f. SaniJet 25	TE20J297	TE20J29790	TJ20J29701	9690012601	9690012601

Pos	Qty	Denomination	SJ25	SJ25**	SJ25 UP*	Duplex FFKM	SS FFKM
		Major Service Kit f. Toftejorg SaniJet 25	TE20J299	TE20J29990	TE20J29901*)	9690012801*)	9690012802*)
Consisting of:							
4	1	Nut for stem	TE20J627	TE20J627	TE20J627	9690008601	TE20J638
8	1	Stem	TE20J624	TE20J624	TE20J624	9690009801	TE20J624
11.1	1	Bushing	TE20J521	TE20J521	TE20J521	TE20J521	TE20J521
12	1	Planet gear assembly	TE20J515	TE20J515	TE20J515	9690012901	TE20J515
14	1	Bevel gear	TE20J522	TE20J522	TE20J522	9690010201	TE20J522
15	1	Nut for hub	TE20J638	TE20J638	TE20J638	9690009001	TE20J638
-	1	Minor Service kit f. SaniJet 25	TE20J298	TE20J29890	TE20J29801	9690012701	9690012702

*) With Q-Doc and USP VI Certificate

**)With Q-Doc

1.5

Tools

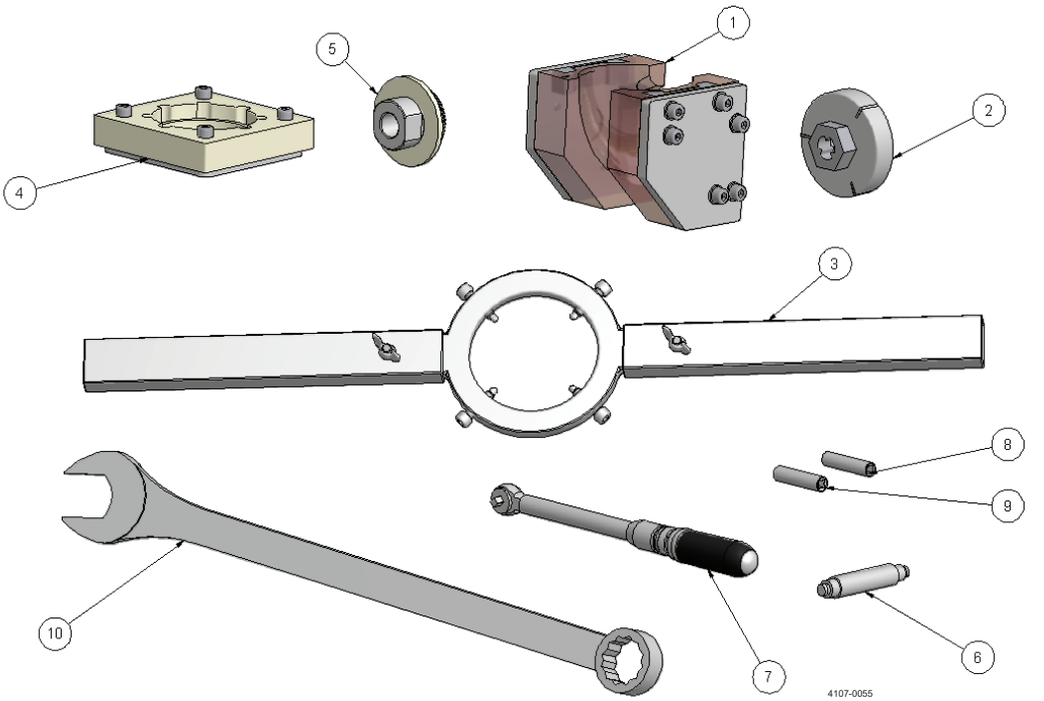

Pos	Qty	Denomination	Item no.
Tools			
		Standard tool kit for Alfa Laval Toftejorg SaniJet 25	TE81B155
Consisting of:			
1	1	Fixture tool f. body	TE20J386
2	1	Fixture tool f. hub and turbine	TE20J392
3	1	Ring key f. nuts (dismountable)	TE20J393
4	1	Fixture tool f. nozzle	TE20J366
5	1	Fixture tool f. stem	TE20J360
6	1	Drift f. bushings	TE81B139
7	1	Torque wrench (4-24 Nm) – ¼"	TE81B156
8	1	NV8 socket, long, ¼"	TE81B157
9	1	NV9 socket, long, ¼"	TE81B158
10	1	NV36 Ring/Fork key	TE81B159

+ Bench vise (jaw opening > 160 mm)
+ Hammer (soft - plastic)
+ 3-5 mm standard drift
+ brush for applying food grade/FDA compliant grease

All tool surfaces that come into contact with the machine shall be of a material that is not corroded and free of imperfections and soil.

1.5

TJ40G

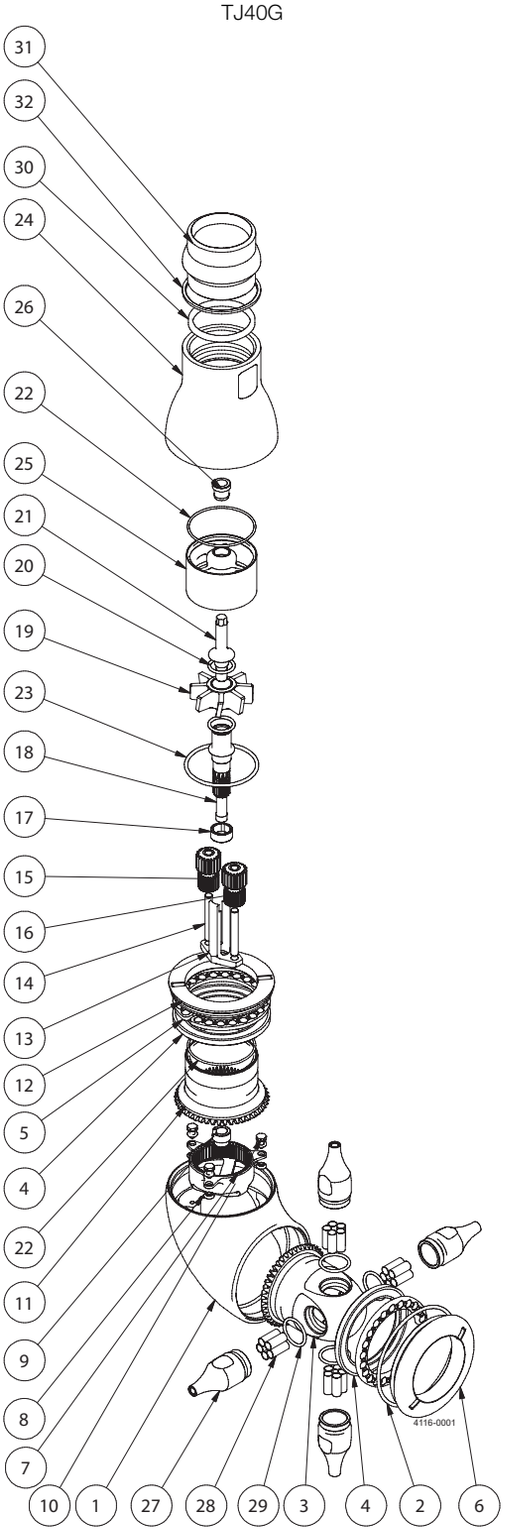
31
32
30
24
26
22
25
21
20
19
23
18
17
15
16
14
13
12
5
4
22
11
9
8
7
10
1
27
28
29
3
4
2
6
4116-0001

Pos		Qty	Denomination	Item no.	Material	Remark
TJ40G						
1		1	Body, [1]	9690000501	Stainless steel	*Note
2	✧●	1	O-ring	9690003801	Elastomer	Wear part
3		1	Hub	9690000801	Stainless steel	Spare part
4	●	2	Ball race	9690001101	Stainless steel	Wear part
5	●	2	Ball retainer w. balls	TE20G318	Polymer/SS	Wear part
6	●	1	Hub nut	9690000601	Stainless steel	Wear part
7		1	Gear ring	9690001601	Stainless steel	Spare part
8		6	Seal ring	TE20J509	Polymer	Wear part
9	✧●	1	Bearing f. body	9690003301	Polymer	Wear part
10		3	Screw f. body	TE20J550	Stainless steel	Spare part
11		1	Stem	8010005384	Stainless steel	Spare part
12	●	1	Stem nut	9690001201	Stainless steel	Wear part
13+14		1	GEAR ASSEMBLY TJ40G, complete	9690007201	Stainless steel	Spare part
13		1	Gear frame		Stainless steel	Spare part
14		2	Shaft f. planet gear		Stainless steel	Spare part
15	✧●	1	Planet wheel I	9690003601	Polymer	Wear part
16	✧●	1	Planet wheel II	9690003701	Polymer	Wear part
17	✧●	1	Bushing f. planet gear	9690003401	Polymer	Wear part
18		1	Impeller shaft	9690002501	Stainless steel	Spare part
19	□	1	Impeller, -1	9690002601	Polymer	Spare part
	□	1	Impeller, -2	9690002701	Polymer	Spare part
	□	1	Impeller, -3	9690002801	Polymer	Spare part
	□	1	Impeller, -4	9690003001	Polymer	Spare part
20		2	O-ring	TE51T135	Elastomer	Wear part
21		1	Shaft end	TE20J542	Stainless steel	Spare part
22	✧●	2	O-ring	9690005601	Elastomer	Wear part
23	✧●	1	O-ring	TE51T169	Elastomer	Wear part
24		1	Cone	9690001501	Stainless steel	Spare part
25	□	1	Guide, - 1	9690004501	Polymer	Spare part
	□	1	Guide, - 2	9690004701	Polymer	Spare part
	□	1	Guide, - 3	9690004901	Polymer	Spare part
	□	1	Guide, - 4	9690005001	Polymer	Spare part
26	✧●	1	Bearing f. turbine top	TE20G548	Polymer	Wear part
27.1	□	4/2	Nozzle, [2]		Stainless steel	Spare part
	□	4/2	Nozzle, Burst, [2]		Stainless steel	Spare part
27.2	□	0/2	Blind cap, [3]	9690006901	Stainless steel	Spare part
28		20/10	Nozzle vane		Stainless steel	Spare part
29	✧●	4	O-ring	9690005501	Elastomer	Wear part
30		1	Gasket f. cone - inside	9690003201	Elastomer	Spare part
32		1	Gasket f. cone - outside	9690005201	Elastomer	Other prod.

[1]: Position 1 is not sold as single spare part component. Only sold as part of a machine maintenance/repair order. For further information please contact Alfa Laval Customer Support.

[2] For nozzles as spare parts or refitting with burst nozzles, please choose from scheme underneath.

[3] Note pos. 27.2: For blinding holes on 2 nozzle versions.

Please note that some of the polymer parts are in PEEK, which is not resistant to concentrated sulfuric acid.

Scheme, nozzles complete				
Item no.	Denomination		Item no.	Denomination
9690007101	Nozzle ø6.0 f. TJ40G complete		9690007115	Nozzle, Burst, ø6.0 f. TJ40G complete
9690007102	Nozzle ø6.6 f. TJ40G complete		9690007116	Nozzle, Burst, ø6.6 f. TJ40G complete
9690007103	Nozzle ø7.3 f. TJ40G complete		9690007117	Nozzle, Burst, ø7.3 f. TJ40G complete
9690007104	Nozzle ø8.1 f. TJ40G complete		9690007118	Nozzle, Burst, ø8.1 f. TJ40G complete
9690007105	Nozzle ø9.0 f. TJ40G complete		9690007119	Nozzle, Burst, ø9.0 f. TJ40G complete
9690007106	Nozzle ø10.0 f. TJ40G complete		9690007120	Nozzle, Burst, ø10.0 f. TJ40G complete
9690007107	Nozzle ø11.2 f. TJ40G complete		9690007121	Nozzle, Burst, ø11.2 f. TJ40G complete

		Item no.
Service kits		
✧	**Minor service kit TJ40G and TJ40G-HD**	**8010005535**
✧	**Minor service kit TJ40G and TJ40G-HD - Q-Doc**	**8010005541**
●	**Major service kit TJ40G**	**8010005542**
●	**Major service kit TJ40G - Q-Doc**	**8010005546**

□ Configuration according to delivery note/order.

Parts marked with ✧ are included in the Minor Service Kits for TJ40G/TJ40G-HD and TJ40G/TJ40G-HD - Q-Doc

Parts marked with ● are included in the Major Service Kits for TJ40G/TJ40G - Q-Doc

The machine can be delivered with ATEX/IECEx certification.

1.5

TJ40G-HD

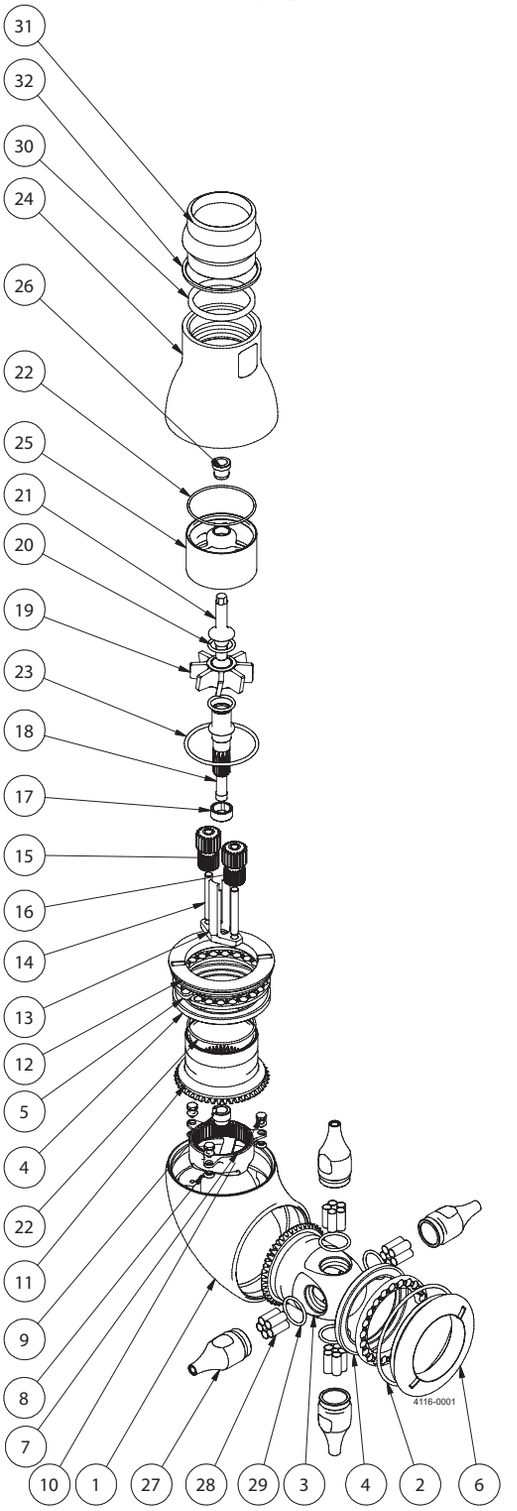
31
32
30
24
26
22
25
21
20
19
23
18
17
15
16
14
13
12
5
4
22
11
9
8
7
10
1
27
28
29
3
4
2
6
4116-0001

Pos		Qty	Denomination	Item no.	Material	Remark
TJ40G-HD						
1		1	Body, [1]	9690000501	Stainless steel	*Note
2	✧●	1	O-ring	9690003801	Elastomer	Wear part
3		1	Hub	9690000801	Stainless steel	Spare part
4	●	2	Ball race	9690001101	Stainless steel	Wear part
5	●	2	Ball retainer w. balls	TE20G318	Polymer/SS	Wear part
6	●	1	Hub nut - HD	9690000701	Stainless steel	Wear part
7		1	Gear ring	9690001601	Stainless steel	Spare part
8		6	Seal ring	TE20J509	Polymer	Wear part
9	✧●	1	Bearing f. body	9690003301	Polymer	Wear part
10		3	Screw f. body	TE20J550	Stainless steel	Spare part
11		1	Stem	8010005384	Stainless steel	Spare part
12	●	1	Stem nut - HD	9690001301	Stainless steel	Wear part
13+14		1	Gear assembly, complete	9690007201	Stainless steel	Spare part
13		1	Gear frame		Stainless steel	Spare part
14		2	Shaft f. planet gear		Stainless steel	Spare part
15	✧●	1	Planet wheel I	9690003601	Polymer	Wear part
16	✧●	1	Planet wheel II	9690003701	Polymer	Wear part
17	✧●	1	Bushing f. planet gear	9690003401	Polymer	Wear part
18		1	Impeller shaft	9690002501	Stainless steel	Spare part
19	□	1	Impeller, - 1	9690002601	Polymer	Spare part
	□	1	Impeller, - 2	9690002701	Polymer	Spare part
	□	1	Impeller, - 3	9690002801	Polymer	Spare part
	□	1	Impeller, - 4	9690003001	Polymer	Spare part
20		2	O-ring	TE51T135	Elastomer	Wear part
21		1	Shaft end	TE20J542	Stainless steel	Spare part
22	✧●	2	O-ring	9690005601	Elastomer	Wear part
23	✧●	1	O-ring	TE51T169	Elastomer	Wear part
24		1	Cone	9690001501	Stainless steel	Spare part
25	□	1	Guide, - 1	9690004501	Polymer	Spare part
	□	1	Guide, - 2	9690004701	Polymer	Spare part
	□	1	Guide, - 3	9690004901	Polymer	Spare part
	□	1	Guide, - 4	9690005001	Polymer	Spare part
26	✧●	1	Bearing f. turbine top	TE20G548	Polymer	Wear part
27.1	□	4/2	Nozzle, [2]		Stainless steel	Spare part
	□	4/2	Nozzle, Burst, [2]		Stainless steel	Spare part
27.2	□	0/2	Blind cap, [3]	9690006901	Stainless steel	Spare part
28		20/10	Nozzle vane		Stainless steel	Spare part
29	✧●	4	O-ring	9690005501	Elastomer	Wear part
30		1	Gasket f. cone - inside	9690003201	Elastomer	Spare part
32		1	Gasket f. cone - outside	9690005201	Elastomer	Other prod.

[1]: Position 1 is not sold as single spare part component. Only sold as part of a machine maintenance/repair order. For further information please contact Alfa Laval Customer Support.

[2]: For nozzles as spare parts or refitting with burst nozzles, please choose from scheme underneath.

[3] pos. 27.2: For blinding holes on 2 nozzle versions.

Scheme, nozzles complete				
Item no.	Denomination		Item no.	Denomination
9690007101	Nozzle ø6.0 f. TJ40G complete		9690007115	Nozzle, Burst, ø6.0 f. TJ40G complete
9690007102	Nozzle ø6.6 f. TJ40G complete		9690007116	Nozzle, Burst, ø6.6 f. TJ40G complete
9690007103	Nozzle ø7.3 f. TJ40G complete		9690007117	Nozzle, Burst, ø7.3 f. TJ40G complete
9690007104	Nozzle ø8.1 f. TJ40G complete		9690007118	Nozzle, Burst, ø8.1 f. TJ40G complete
9690007105	Nozzle ø9.0 f. TJ40G complete		9690007119	Nozzle, Burst, ø9.0 f. TJ40G complete
9690007106	Nozzle ø10.0 f. TJ40G complete		9690007120	Nozzle, Burst, ø10.0 f. TJ40G complete
9690007107	Nozzle ø11.2 f. TJ40G complete		9690007121	Nozzle, Burst, ø11.2 f. TJ40G complete

		Item no.
Service kits		
✧	**Minor service kit for TJ40G and TJ40G-HD**	**8010005535**
✧	**Minor service kit TJ40G and TJ40G-HD - Q-Doc**	**8010005541**
●	**Major service kit TJ40G-HD**	**8010005547**
●	**Major service kit TJ40G-HD - Q-Doc**	**8010005548**

❑ Configuration according to delivery note/order.

Parts marked with ✧ are included in the Minor Service Kits for TJ40G/TJ40G-HD and TJ40G/TJ40G-HD - Q-Doc

Parts marked with ● are included in the Major Service Kits for TJ40G-HD/TJ40G-HD - Q-Doc

The machine can be delivered with ATEX/IECEx certification.

1.5

Service intervals

TJ40G and TJ40G-HD

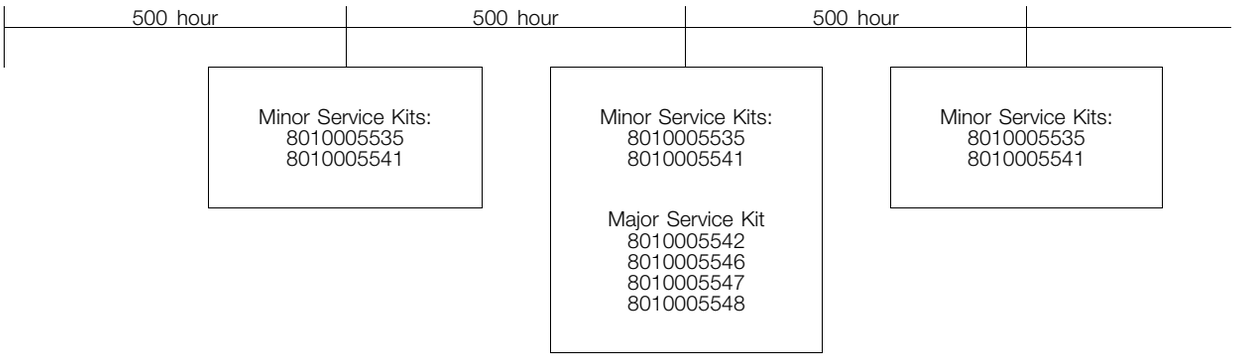

The service intervals are recommended on the basis of pure liquids. When liquids contain particles and other kind of abrasives, we recommend shorter service intervals depending on the actual running conditions.

Pos	Qty	Denomination	TJ40G & TJ40G-HD Item no. 8010005535	TJ40G & TJ40G-HD Q-doc Item no. 8010005541
Minor service kits				
	1	TJ40G Bearing f. body	9690003301	9690003301
	1	TJ40G Bushing f. Planet gear	9690003401	9690003401
	1	TJ40G Gear wheel I	9690003601	9690003601
	1	TJ40G Gear wheel II	9690003701	9690003701
	1	O-ring	9690003801	9690003801
	4	O-ring	9690005501	9690005501
	2	O-ring	9690005601	9690005601
	1	O-ring	TE51T169	TE51T169
	1	Bearing for turbine shaft, top	TE20G548	TE20G548

Pos	Qty	Denomination	TJ40G Item no. 8010005542	TJ40G Q-doc Item no. 8010005546	TJ40G HD Item no. 8010005547	TJ40G HD Q-doc Item no. 8010005548
Major service kits						
	1	TJ40G Hub nut	9690000601	9690000601	9690000701	9690000701
	2	TJ40G Ball race	9690001101	9690001101	9690001101	9690001101
	1	TJ40G Stem nut	9690001201	9690001201	9690001301	9690001301
	1	TJ40G Bearing f. body	9690003301	9690003301	9690003301	9690003301
	1	TJ40G Bushing f. Planet gear	9690003401	9690003401	9690003401	9690003401
	1	TJ40G Gear wheel I	9690003601	9690003601	9690003601	9690003601
	1	TJ40G Gear wheel II	9690003701	9690003701	9690003701	9690003701
	1	O-ring	9690003801	9690003801	9690003801	9690003801
	4	O-ring	9690005501	9690005501	9690005501	9690005501
	2	O-ring	9690005601	9690005601	9690005601	9690005601
	1	O-ring	TE51T169	TE51T169	TE51T169	TE51T169
	2	Ball retainer w. balls	TE20G318	TE20G318	TE20G318	TE20G318
	1	Bearing for turbine shaft, top	TE20G548	TE20G548	TE20G548	TE20G548

1.5

Tools

9690007801

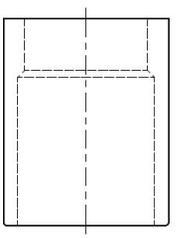

9690007901

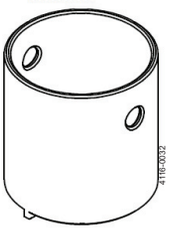

9690008001

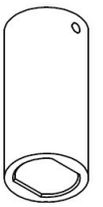

Pos	Qty	Denomination	Item no.
Tool kit			
		Alfa Laval TJ40G Tool kit	TE81B149
Consisting of:			
	1	Fixture f. Impeller	TE20J591
	1	5 mm calipers	TE369
	1	Ring fork key NV24	TE81B140
	1	NV8 socket long	TE81B157
	1	Torque wrench 1/4" 5 - 25 Nm	TE81B156
	1	Drift punch ø8	TE81B148
	1	Ring fork key NV65	TE81B147

Pos	Qty	Denomination	Item no.
Other tools f. TJ40G			
		Ball race tool f. TJ40G	9690007801
		Nut tool	9690007901
		Socket f. TJ40G nozzles	9690008001

1.5

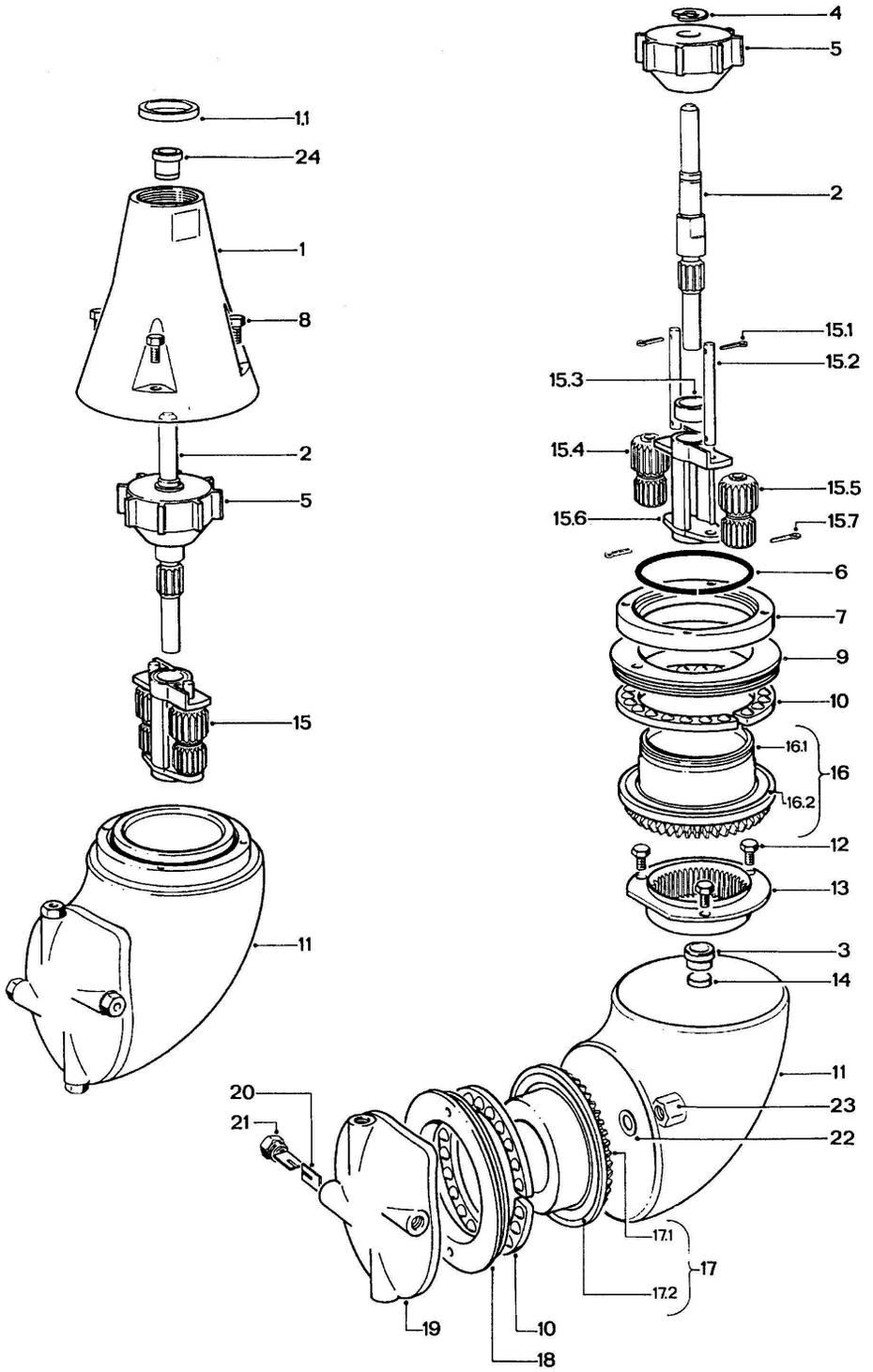
4
5
1.1
24
2
1
15.1
8
15.2
15.3
2
15.4
15.5
5
15.6
15.7
6
7
15
9
10
16.1
16
16.2
12
13
11
3
14
11
20
23
21
22
17.1
17
17.2
19
10
18

Pos		Qty	Denomination	Item no.	Material	Remark
1	□	1	Cone, 1" BSP	TE20G506	Stainless steel	Spare part
	□	1	Cone, 1" NPT	TE20G507	Stainless steel	Spare part
2		1	Turbine shaft	TE20G550	Stainless steel	Spare part
3	✧●	1	Bearing for Turbine shaft	TE20G549	Polymer	Wear part
4		1	Circlip	TE51C201	Stainless steel	Spare part
5	□	1	Impeller, (ø3.9 mm nozzle)	TE20G553	Polymer (PVDF)	Spare part
	□	1	Impeller, (ø4.6 mm nozzle)	TE20G554	Polymer (PVDF)	Spare part
	□	1	Impeller, (ø5,5 mm nozzle)	TE20G555	Polymer (PVDF)	Spare part
	□	1	Impeller, (ø3.9 mm nozzle)	TE20G595	Polymer (PEEK)	Spare part
	□	1	Impeller, (ø4.6 mm nozzle)	TE20G596	Polymer (PEEK)	Spare part
	□	1	Impeller, (ø5.5 mm nozzle)	TE20G597	Polymer (PEEK)	Spare part
6		1	Retainer spring	TE20G565	Stainless steel	Spare part
7		1	Retaining ring	TE20G563	Stainless steel	Spare part
8		4	Screw	TE51A172	Stainless steel	Spare part
9	●	1	Stem nut with ball race	TE20G571	Stainless steel	Wear part
10	●	2	Ball retainer with balls	TE20G318	Polymer/Stainless steel	Wear part
11		1	Body, [1]		Stainless steel	N/A
12		3	Screw	TE51A170	Stainless steel	Spare part
13		1	Internal gear	TE20G525	Stainless steel	Spare part
14	✧●	1	Slide bearing	TE20G558	Polymer	Wear part
15		1	Carrier assembly	TE20G330	Assembly	Spare part
15.1	●	2	Cotter pin	TE51C102	Stainless steel	Spare part
15.2		2	Shaft for Planet wheel	TE20G541	Stainless steel	Spare part
15.3	✧●	1	Bearing for planet gear carrier	TE20G545	Polymer	Wear part
15.4	✧●	1	Planet wheel I	TE20G535	Polymer	Wear part
15.5	✧●	1	Planet wheel II	TE20G536	Polymer	Wear part
15.6		1	Planet gear carrier	TE20G530	Stainless steel	Spare part
15.7		2	Cotter pin (= pos. 15.1)	TE51C102	Stainless steel	Spare part
16		1	Stem complete	TE20G319	Assembly	Spare part
16.1		1	Stem	TE20G624	Stainless steel	Spare part
16.2		1	Ball race	TE20G574	Stainless steel	Wear part
17		1	Hub complete	TE20G320	Assembly	Spare part
17.1		1	Hub	TE20G625	Stainless steel	Spare part
17.2	●	1	Ball race (= pos. 16.2)	TE20G574	Stainless steel	Wear part
18	●	1	Hub nut with ball race	TE20G573	Stainless steel	Wear part
19	□	1	Hub cover, [2]		Stainless steel	Spare part
	□	1	Hub cover, with vanes and logo	TE20G391	Stainless steel	Spare part
20		8	Nozzle vane	TE20G594	Stainless steel	Spare part
21	□	4	Nozzle, ø3,9 mm	TE20G608	Stainless steel	Spare part
	□	4	Nozzle, ø4,6 mm	TE20G609	Stainless steel	Spare part
	□	4	Nozzle, ø5,5 mm	TE20G605	Stainless steel	Spare part
22	✧●	1	Washer	TE20G584	Stainless steel	Wear part
23		1	Cap nut	TE51A521	Stainless steel	Spare part
24	✧●	1	Bearing for turbine shaft top	TE20G548	Polymer	Wear part

[1]: Pos. 11 is not sold as single spare part component but only as part of a machine maintenance/repair order. For further information please contact Alfa Laval Customer Support.

[2] pos. 19: For machine maintenance/repair, please order item no. TE20G391.

Please note that some of the polymer parts are in PEEK, which is not resistant to concentrated sulfuric acid.

Service kits

Minor service kit MultiJet 25	TE20G299
Major service kit MultiJet 25	TE20G288

1.5

Service intervals

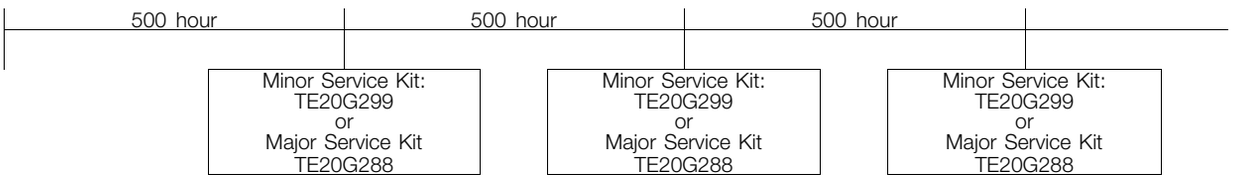

NOTE
The service intervals are recommended on the basis of pure liquids. When liquids contain particles and other kind of abrasives, we recommend shorter service intervals depending on the actual running conditions.

Pos	Qty	Denomination	Item no.
Minor service kit			
		Minor Service kit	TE20G299
Consisting of:			
	1	Bearing for turbine shaft, top	TE20G548
	1	Washer, ø8mm w.seal	TE20G584
	1	Bearing for Turbine shaft	TE20G549
	1	Slide bearing	TE20G558
	1	Bearing for Planet gear carrier	TE20G545
	1	Planet wheel	TE20G535
	1	Planet wheel	TE20G536

Pos	Qty	Denomination	Item no.
Major service kit			
		Major Service kit	TE20G288
Consisting of:			
	2	Ball retainer w. balls	TE20G318
	1	Planet wheel I	TE20G535
	1	Planet wheel II	TE20G536
	1	Bearing for Planet Gear carrie	TE20G545
	1	Bearing for turbine shaft, top	TE20G548
	1	Bearing for Turbine shaft	TE20G549
	1	Slide bearing	TE20G558
	1	Stem nut with Ball race	TE20G571
	1	Hub nut with Ball race	TE20G573
	2	Ball race	TE20G574
	1	Washer, ø8mm w.seal	TE20G584
	2	Cotter pin	TE51C102

NOTE

For all machines with serial number below 0604 001, please contact your local Alfa Laval office for correct service kit.

Pos	Qty	Denomination	Item no.
Tools			
		Standard Tool Kit	TE81B085
Consisting of:			
		Caliper	TE369
		Socket wrench w. pin	TE462A
		Spanner	TE81B040
		Spanner	TE81B041
		Torque wrench tool kit	TE81B087
		Consisting of:	
		Torque wrench with interchangeable ratchet head	TE81B088
		Ring insert tool for torque wrench	TE81B089
Additional tool available on request			
		Fixture tool kit for body	TE20J386

Top assembly

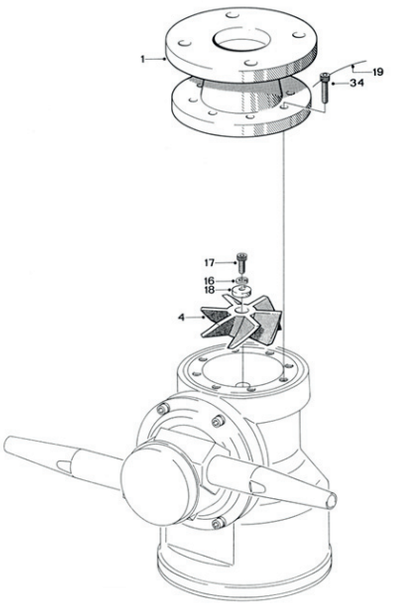

Bottom assembly

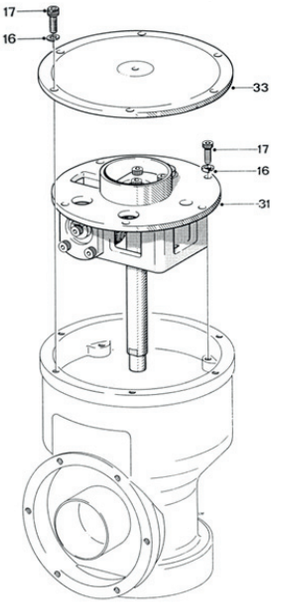

Hub assembly

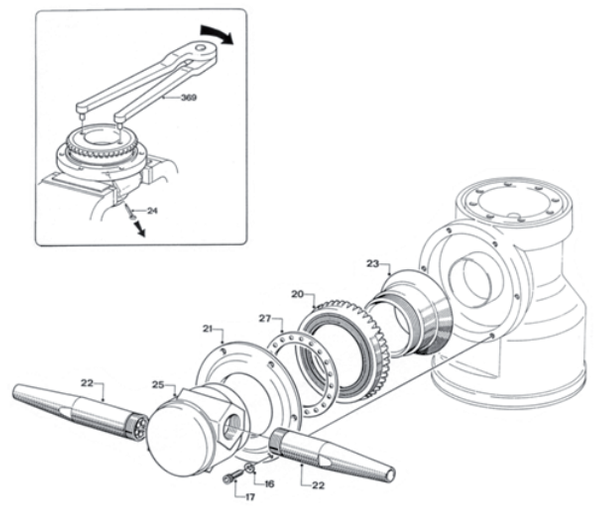

Stem subassembly

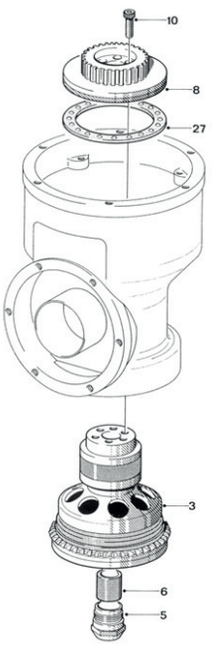

Gear subassembly

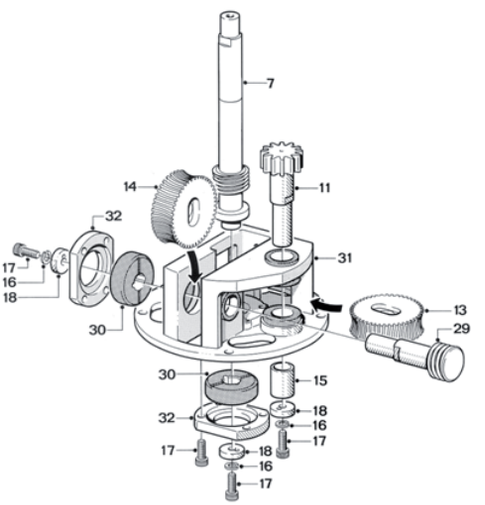

Pos		Qty	Denomination	Item no.	Material	Remark
1	□	1	Nipple 2½" NPT	TE22E501	Stainless steel	Spare part
	□	1	Nipple 2½" ASA	TE22E502	Stainless steel	Spare part
	□	1	Nipple 2½" BSP	TE22E503	Stainless steel	Spare part
3		1	Stem	TEB604Z	Stainless steel/polymer	Spare part
3.1		1	Bottom liner	TEB6042*	Polymer	Wear part
3.2		1	Top liner	TEB6041*	Polymer	Wear part
4		1	Impeller 100%	TEB605	Stainless steel	Spare part
5		1	Gland	TE608Z	Stainless steel	Spare part
6		1	Main bush	TE609P	Polymer	Wear part
7		1	Turbine shaft	TE911K	Stainless steel	Wear part
8		1	Gear wheel w. ball race	TE51213	Stainless steel	Spare part
8.1		1	Ball race	TE1261	Stainless steel	Wear part
10		6	Screw	TE120	Stainless steel	Spare part
11		1	Pinion	TE114	Stainless steel	Spare part
12		3	Collar bush	TE615K	Carbon	Wear part
13		1	Wormwheel w. reinforc.	TE22A360	Polymer/Stainless steel	Wear part
14	□	1	Wormwheel w. reinforc.	TE22A360	Polymer/Stainless steel	Wear part
	□	1	Worm wheel E-gear	TE22A564	Stainless steel	Wear part
15		1	Journal	TE117	Stainless steel	Spare part
16		21	Spring washer	TE156	Stainless steel	Spare part
17		29	Screw	TE118	Stainless steel	Spare part
18		4	Washer	TE619A	Stainless steel	Spare part
19		4	Locking wire	TE651	Stainless steel	Spare part
20		1	Bevel gear w. ball race	TE622S	Stainless steel	Spare part
20.1		1	Ball race	TE1261	Stainless steel	Wear part
21		1	Hub cover w. ball race	TE22B340	Stainless steel	Spare part
21.1		1	Ball race	TE1261	Stainless steel	Wear part
22	□	2	Nozzle, ø15 mm	TE50C015	Stainless steel	Spare part
	□	2	Nozzle, ø17 mm	TE50C017	Stainless steel	Spare part
	□	2	Nozzle, ø19 mm	TE50C019	Stainless steel	Spare part
	□	2	Nozzle, ø21 mm	TE50C021	Stainless steel	Spare part
23		1	Hub conical part	TE624OKZ	Stainless steel/polymer	Spare part
23.1		1	Hub liner	TE62411*	Polymer	Wear part
24		1	Cotter pin	TE448	Stainless steel	Spare part
25		1	Hub nozzle part	TE624215	Stainless steel	Spare part
27		2	Ball retainer w. balls	TE126S	Polymer/Stainless steel	Wear part
28		1	Body with bearings	TEBT627Z	Stainless steel	**Note
28.2		1	Main collar lower	TE22E516	Stainless steel	Wear part
28.3		1	Ball race	TE1261	Stainless steel	Wear part
29	□	1	Horizontal shaft	TE128Z	Stainless steel	Wear part
	□	1	Horizontal shaft E-gear	TE128E	Stainless steel	Wear part
30		2	Slide bearing	TE929K	Carbon	Wear part
31		1	Gear frame w. bushes	TE630R	Stainless steel/carbon	Spare part
32		2	Bearing cover	TE531	Stainless steel	Spare part
33		1	Bottom cover	TE6335	Stainless steel	Spare part
34		8	Screw	TE120F	Stainless steel	Spare part
35		2	Nozzle extension 1"	TE50C101	Stainless steel	Spare part

□ Configuration according to delivery note/order.

*Note: If blue liners on Stem are extremely worn, they can be replaced. This part requires that a precise procedure is followed to accomplish installation. It is highly recommended that an authorized Alfa Laval Tank Equipment Service Center perform the replacement when necessary.

**Note: Pos. 28 is not sold as single Spare part component but only as part of a machine maintenance/repair order. For further information please contact Alfa Laval Customer Support.

1.5

Top assembly

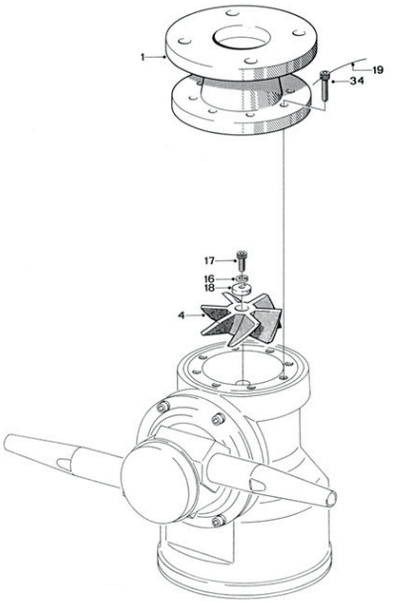

Bottom assembly

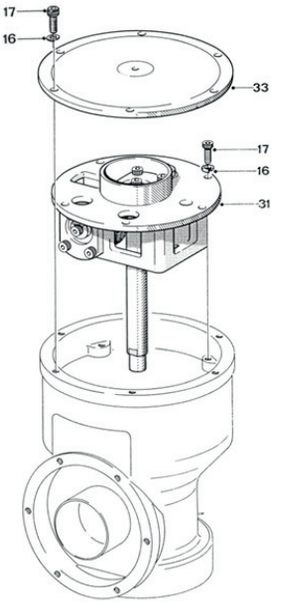

Hub assembly

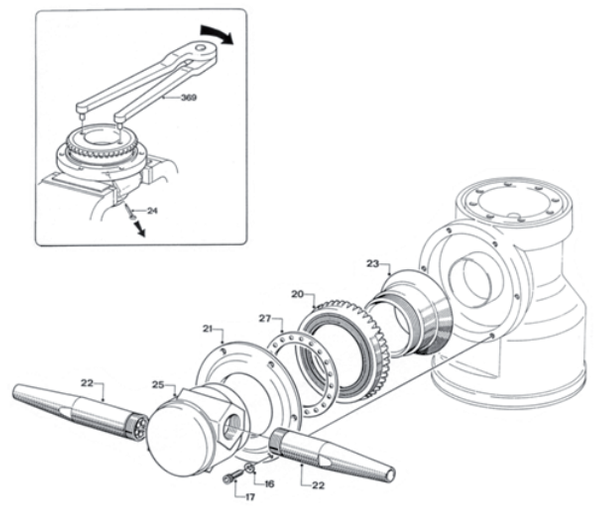

Stem subassembly

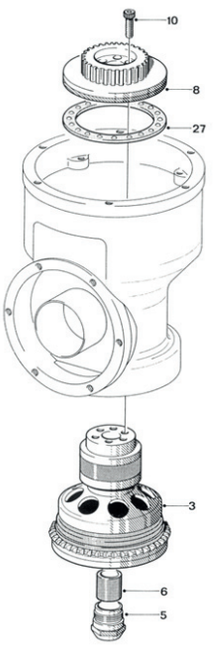

Gear subassembly

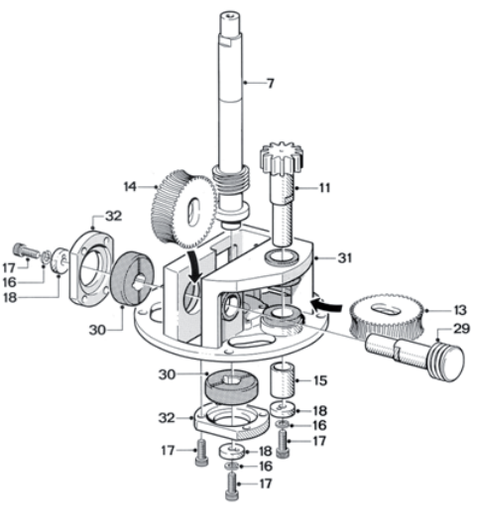

Service intervals

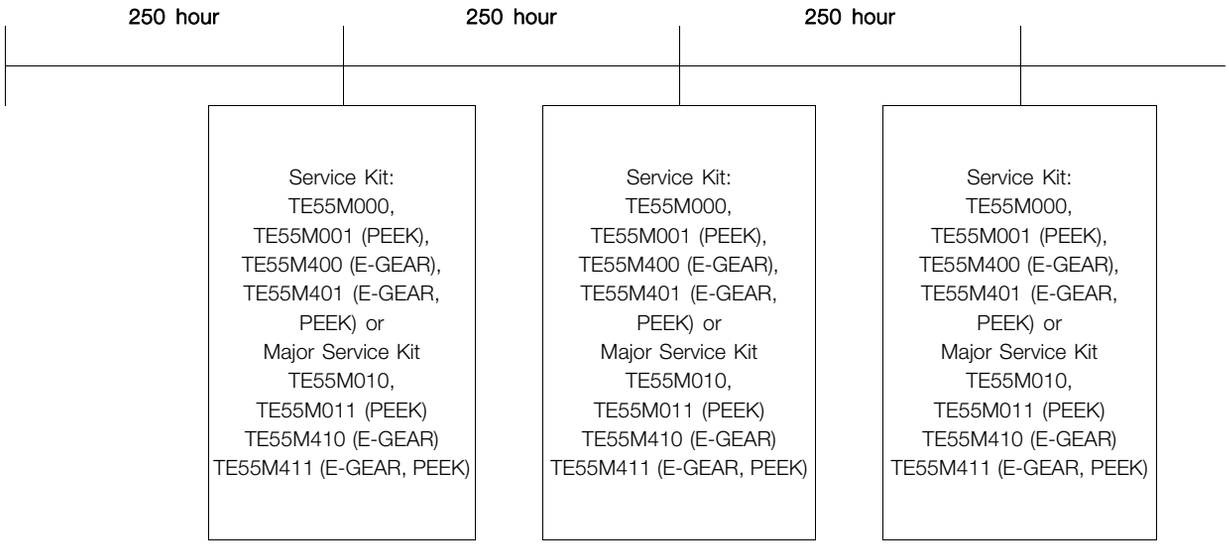

Pos	Qty	Denomination	Item no.
		Service Kit Minor for Toftejorg TZ-750	TE55M000
Consisting of:			
	2	Worm wheel w. reinforcement	TE22A360
	1	Main bush	TE609P
	3	Collar bush	TE615K
	4	Locking Wire	TE651
	2	Slide bearing	TE929K

Pos	Qty	Denomination	Item no.
		Service Kit Minor for Toftejorg TZ-750 (PEEK)	TE55M001
Consisting of:			
	1	Main bush	TE22B575
	3	Collar bush	TE615K
	2	Worm wheel w. reinforcement	TE22A360
	4	Locking Wire	TE651
	2	Slide bearing	TE22A570

Pos	Qty	Denomination	Item no.
		Service Kit Minor for Toftejorg TZ-750 (E-gear)	TE55M400
Consisting of:			
	1	Main bush	TE609P
	3	Collar bush	TE615K
	1	Worm wheel w. reinforcement	TE22A360
	1	Worm wheel w. reinforcement, E-gear	TE22A564
	4	Locking Wire	TE651
	2	Slide bearing	TE929K

Pos	Qty	Denomination	Item no.
		Service Kit Minor for Toftejorg TZ-750 (E-gear, PEEK)	TE55M401
	1	Main bush	TE609P
	3	Collar bush	TE615K
	1	Worm wheel w. reinforcement	TE22A360
	1	Worm wheel w. reinforcement, E-gear	TE22A364
	4	Locking Wire	TE651
	2	Slide bearing	TE929K

1.5

Top assembly

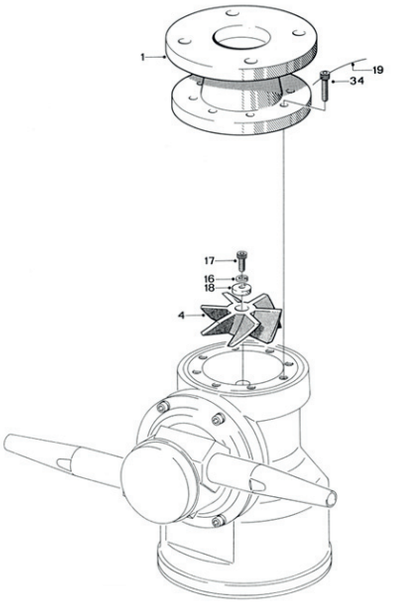

Bottom assembly

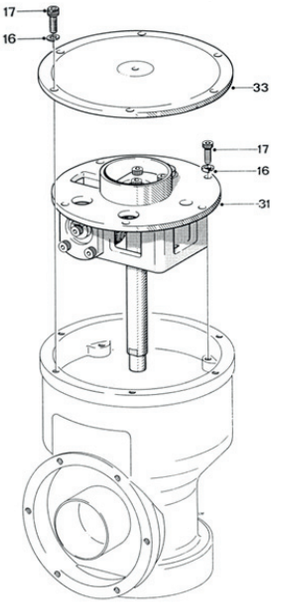

Hub assembly

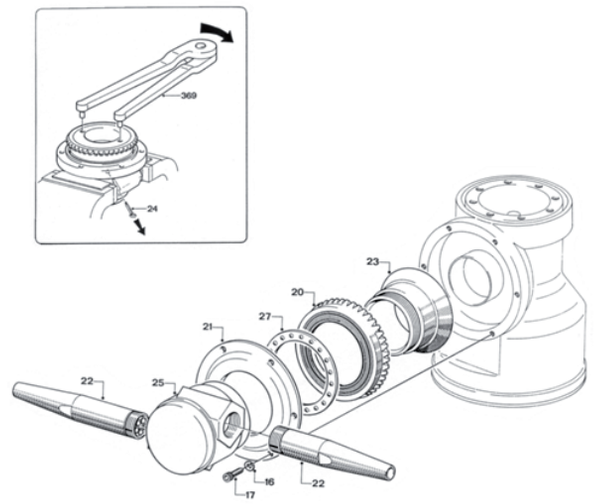

Stem subassembly

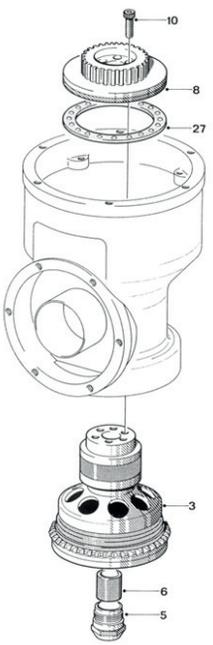

Gear subassembly

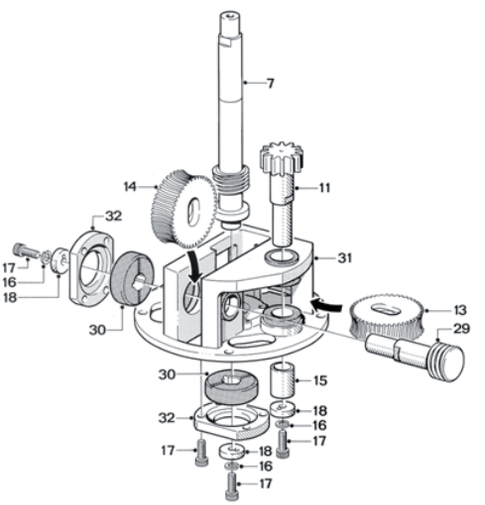

Pos	Qty	Denomination	Item no.
		Service Kit Major for Toftejorg TZ-750	TE55M010
Consisting of:			
	1	Turbine shaft	TE911K
	4	Ball race	TE1261
	1	Hub liner	TE62411*
	1	Cotter pin	TE448
	2	Ball retainer w balls.	TE126S
	1	Main collar, upper	TE127Z1
	1	Main collar, lower	TE127Z2
	1	Collar, hub	TE1273
	1	Horizontal shaft	TE128Z
	1	Service Kit Minor	TE55M000

Pos	Qty	Denomination	Item no.
		Service Kit Major for Toftejorg TZ-750 (PEEK)	TE55M011
Consisting of:			
	1	Turbine shaft	TE911K
	4	Ball race	TE1261
	1	Hub liner	TE62411*
	1	Cotter pin	TE448
	2	Ball retainer w balls.	TE126S
	1	Main collar, upper	TE127Z1
	1	Main collar, lower	TE127Z2
	1	Horizontal shaft	TE128Z
	1	Service Kit Minor	TE55M001

Pos	Qty	Denomination	Item no.
		Service Kit Major for Toftejorg TZ-750 (E-gear)	TE55M410
Consisting of:			
	1	Turbine shaft	TE911K
	4	Ball race	TE1261
	1	Hub liner	TE62411*
	1	Cotter pin	TE448
	2	Ball retainer w balls.	TE126S
	1	Main collar, upper	TE127Z1
	1	Main collar, lower	TE127Z2
	1	Hub collar	TE1273
	1	Horizontal shaft	TE128E
	1	Service Kit Minor	TE55M400

Pos	Qty	Denomination	Item no.
		Service Kit Major for Toftejorg TZ-750 (E-gear, PEEK)	TE55M411
Consisting of:			
	1	Turbine shaft	TE911K
	4	Ball race	TE1261
	1	Hub liner	TE62411*
	1	Cotter pin	TE448
	2	Ball retainer w balls.	TE126S
	1	Main collar, upper	TE127Z1
	1	Main collar, lower	TE127Z2
	1	Hub collar	TE1273
	1	Horizontal shaft	TE128E
	1	Service Kit Minor	TE55M401

Pos	Qty	Denomination	Tool no
		Standard tool kit	TE81B065
Consisting of:			
	1	Hex key	TE134
	1	Hex screwdriver	TE134A
	1	Hex key	TE135
	1	Hex screwdriver	TE135A
	1	Caliper	TE369

Available on request for replacement of collar bush

Pusher for collar bush 2”	TE81B031
Fixture set for collar bush 2”	TE81B032

Sketch of tools for replacement of Collar Bush

TE81B031 Pusher for 2” gear frame

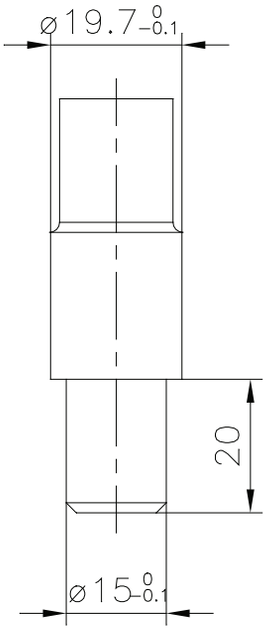

TE81B032 Fixture set for gear frame

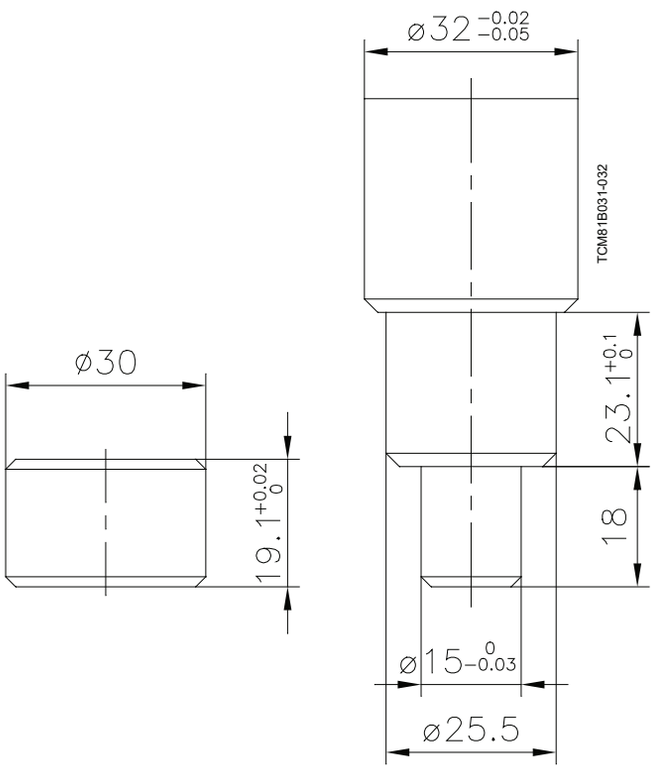

Sketch of tools for replacement of Main Collars

Available on request: TE81B132: Tool for lower collar (2” + 3” TCM) complete

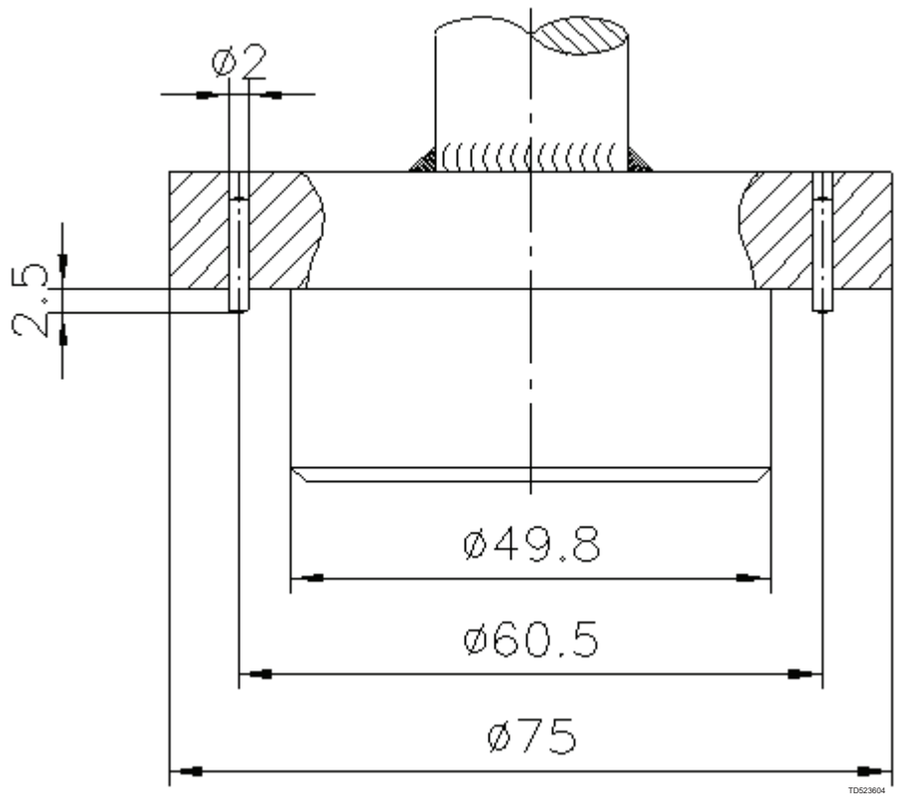

1.5

Top assembly

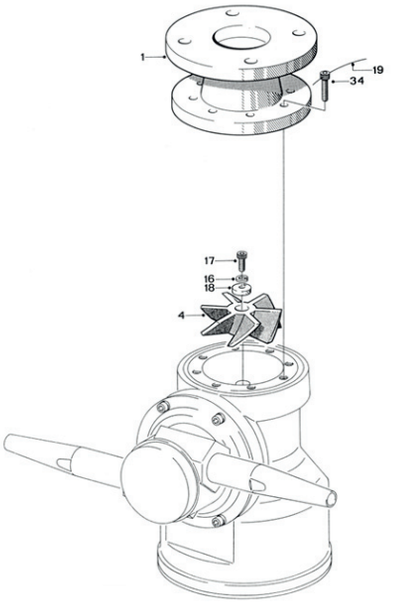

Bottom assembly

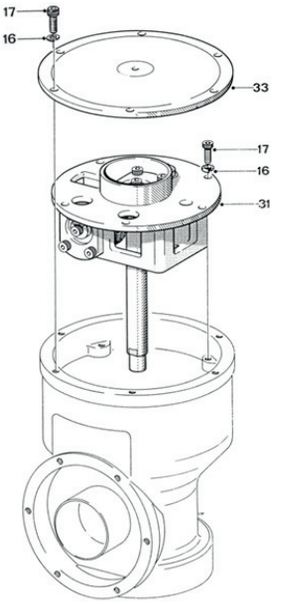

Hub assembly

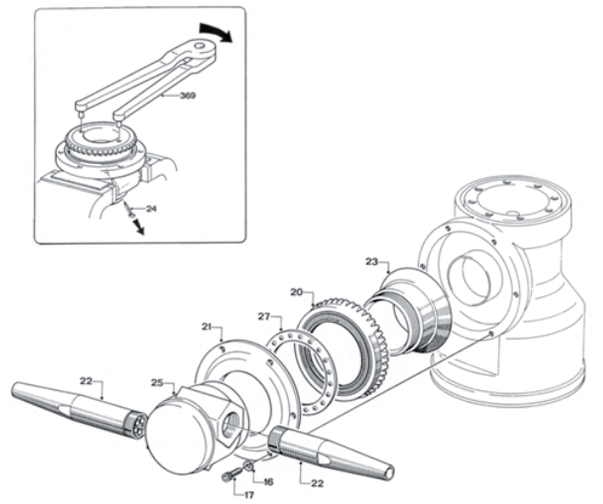

Stem subassembly

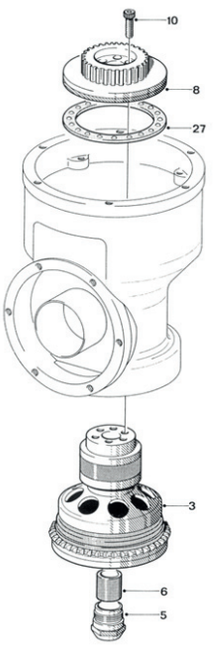

Gear subassembly

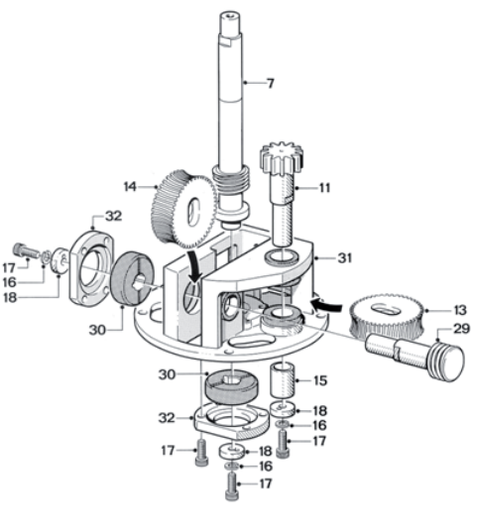

Reference List of Parts,
Alfa Laval Toftejorg TZ-750 Fixed

Pos		Qty	Denomination	Item no.	Material	Remark
1	□	1	Top flange	TE22E510	Stainless steel	Spare part
	□	1	Without flange			
3		1	Stem	TEB604Z	Stainless steel/polymer	Spare part
3.1		1	Bottom liner	TEB6042*)	Polymer	Wear part
3.2		1	Top liner	TEB6041*)	Polymer	Wear part
4		1	Impeller 100%	TEB605	Stainless steel	Spare part
5		1	Gland	TE608Z	Stainless steel	Spare part
6		1	Main bush	TE609P	Polymer	Wear part
7		1	Turbine shaft	TE911K	Stainless steel	Wear part
8		1	Gear wheel w. ball race	TE51213	Stainless steel	Spare part
8.1		1	Ball race	TE1261	Stainless steel	Wear part
10		6	Screw	TE120	Stainless steel	Spare part
11		1	Pinion	TE114	Stainless steel	Spare part
12		3	Collar bush	TE615K	Carbon	Wear part
13		1	Wormwheel w. reinforc.	TE22A360	Polymer/Stainless steel	Wear part
14	□	1	Wormwheel w. reinforc.	TE22A360	Polymer/Stainless steel	Wear part
	□	1	Worm wheel E-gear	TE22A564	Stainless steel	Wear part
15		1	Journal	TE117	Stainless steel	Spare part
16		21	Spring washer	TE156	Stainless steel	Spare part
17		29	Screw	TE118	Stainless steel	Spare part
18		4	Washer	TE619A	Stainless steel	Spare part
19		4	Locking wire	TE651	Stainless steel	Spare part
20		1	Bevel gear w. ball race	TE622S	Stainless steel	Spare part
20.1		1	Ball race	TE1261	Stainless steel	Wear part
21		1	Hub cover w. ball race	TE22B340	Stainless steel	Spare part
21.1		1	Ball race	TE1261	Stainless steel	Wear part
22	□	2	Nozzle, ø15 mm	TE50C015	Stainless steel	Spare part
	□	2	Nozzle, ø17 mm	TE50C017	Stainless steel	Spare part
	□	2	Nozzle, ø19 mm	TE50C019	Stainless steel	Spare part
	□	2	Nozzle, ø21 mm	TE50C021	Stainless steel	Spare part
23		1	Hub conical part	TE624OKZ	Stainless steel/polymer	Spare part
23.1		1	Hub liner	TE62411*)	Polymer	Wear part
24		1	Cotter pin	TE448	Stainless steel	Spare part
25		1	Hub nozzle part	TE624215	Stainless steel	Spare part
27		2	Ball retainer w. balls	TE126S	Polymer/Stainless steel	Wear part
28		1	Body with bearings		Stainless steel	**Note
28.2		1	Main collar lower	TE22E516	Stainless steel	Wear part
28.3		1	Ball race	TE1261	Stainless steel	Wear part
29	□	1	Horizontal shaft	TE128Z	Stainless steel	Wear part
	□	1	Horizontal shaft E-gear	TE128E	Stainless steel	Wear part
30		2	Slide bearing	TE929K	Carbon	Wear part
31		1	Gear frame w. bushes	TE630R	Stainless steel/carbon	Spare part
32		2	Bearing cover	TE531	Stainless steel	Spare part
33		1	Bottom cover	TE6335	Stainless steel	Spare part
34		8	Screw	TE120F	Stainless steel	Spare part
35		2	Nozzle extension 1"	TE50C101	Stainless steel	Spare part

□ Configuration according to delivery note/order.

* If blue liners on Stem are extremely worn, they can be replaced. This part requires that a precise procedure is followed to accomplish installation. It is highly recommended that an authorized Alfa Laval Tank Equipment Service Center perform the replacement when necessary.

**Note: Pos. 28 is not sold as single Spare part component but only as part of a machine maintenance/repair order. For further information please contact Alfa Laval Customer Support.

1.5

Top assembly

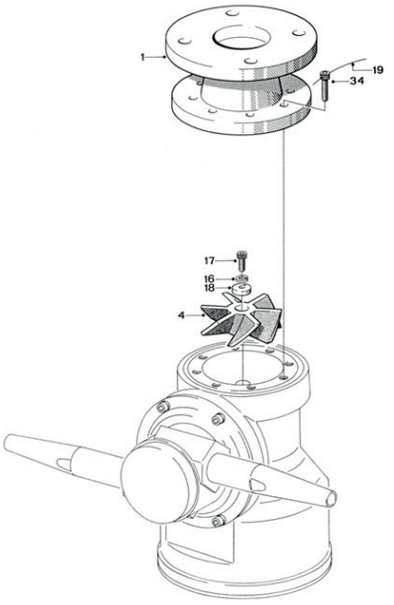

Bottom assembly

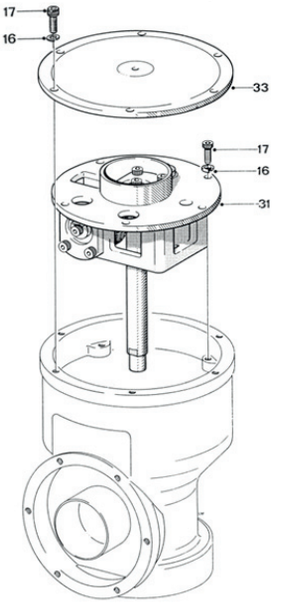

Hub assembly

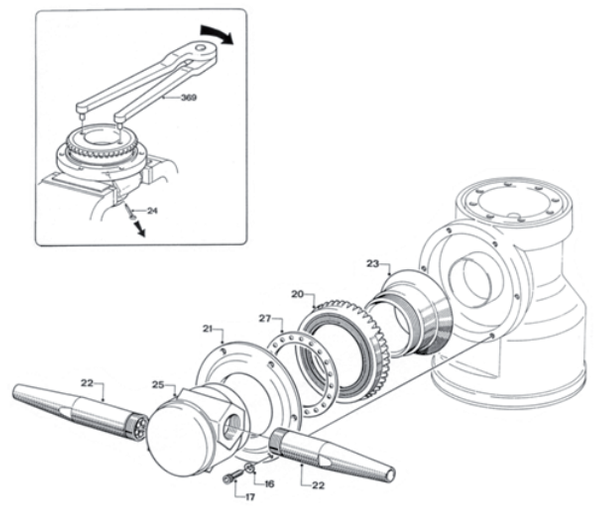

Stem subassembly

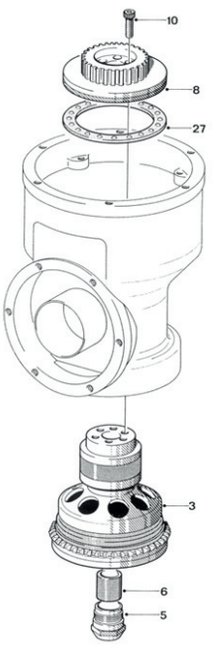

Gear subassembly

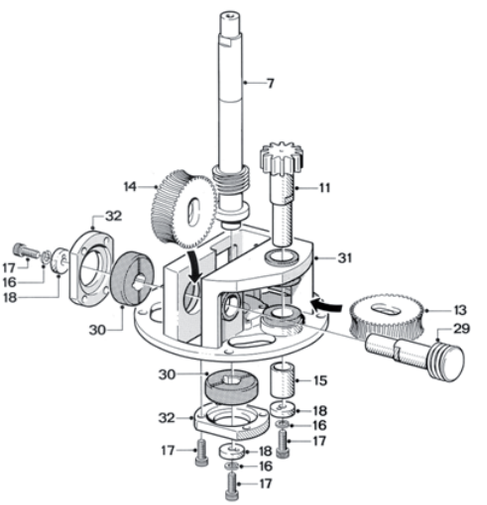

Service intervals

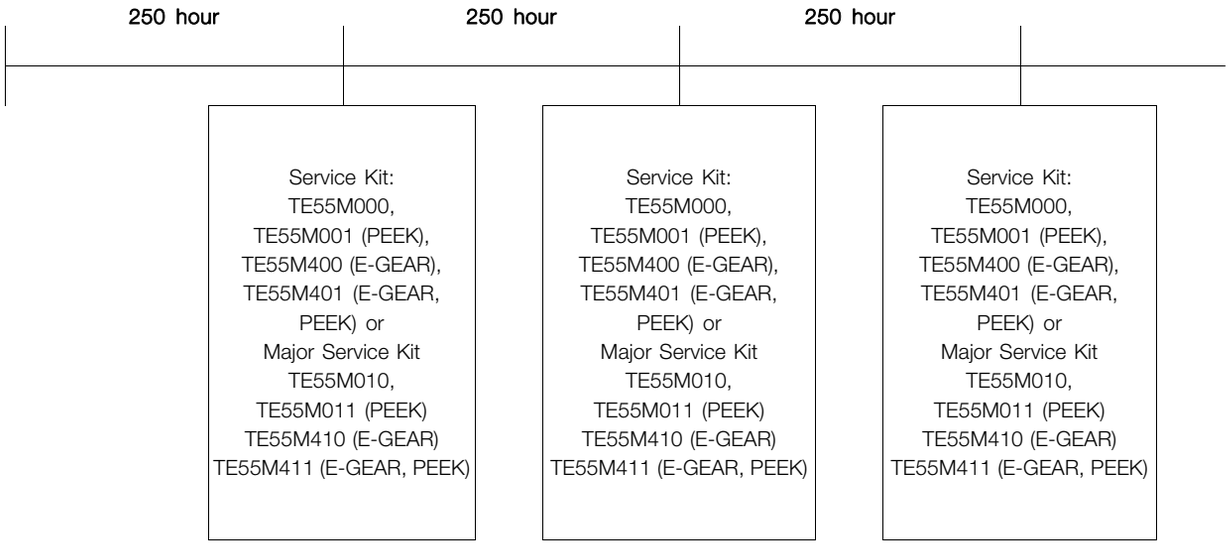

Pos	Qty	Denomination	Item no.
		Service Kit Minor for Toftejorg TZ-750	TE55M000
Consisting of:			
	2	Worm wheel w. reinforcement	TE22A360
	1	Main bush	TE609P
	3	Collar bush	TE615K
	4	Locking Wire	TE651
	2	Slide bearing	TE929K

Pos	Qty	Denomination	Item no.
		Service Kit Minor for Toftejorg TZ-750 (PEEK)	TE55M001
Consisting of:			
	1	Main bush	TE22B575
	3	Collar bush	TE615K
	2	Worm wheel w. reinforcement	TE22A360
	4	Locking Wire	TE651
	2	Slide bearing	TE22A570

Pos	Qty	Denomination	Item no.
		Service Kit Minor for Toftejorg TZ-750 (E-gear)	TE55M400
Consisting of:			
	1	Main bush	TE609P
	3	Collar bush	TE615K
	1	Worm wheel w. reinforcement	TE22A360
	1	Worm wheel w. reinforcement, E-gear	TE22A564
	4	Locking Wire	TE651
	2	Slide bearing	TE929K

Pos	Qty	Denomination	Item no.
		Service Kit Minor for Toftejorg TZ-750 (E-gear, PEEK)	TE55M401
Consisting of:			
	1	Main bush	TE609P
	3	Collar bush	TE615K
	1	Worm wheel w. reinforcement	TE22A360
	1	Worm wheel w. reinforcement, E-gear	TE22A364
	4	Locking Wire	TE651
	2	Slide bearing	TE929K

1.5

Top assembly

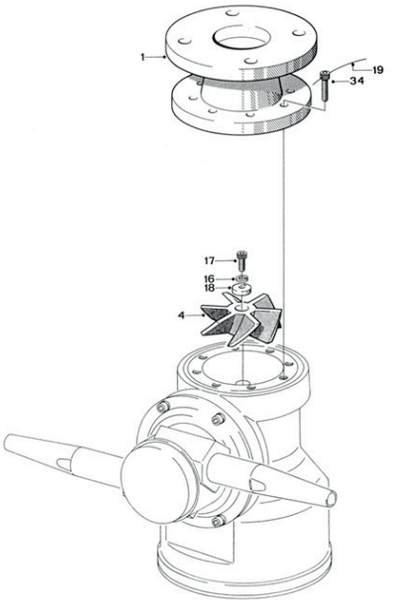

Bottom assembly

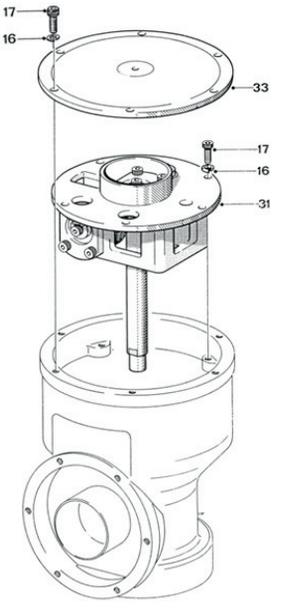

Hub assembly

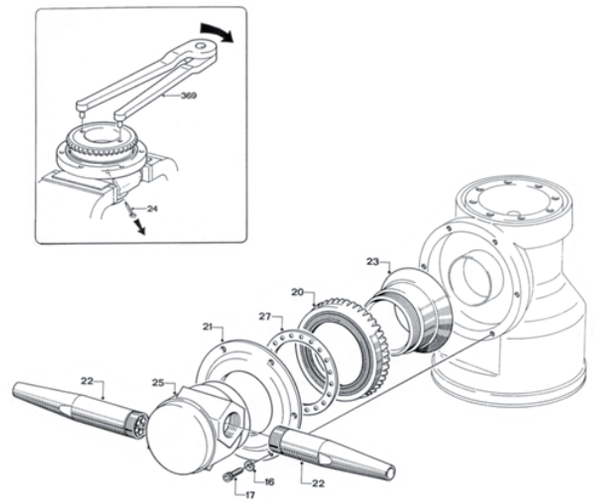

Stem subassembly

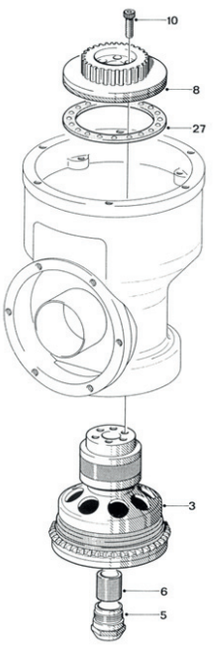

Gear subassembly

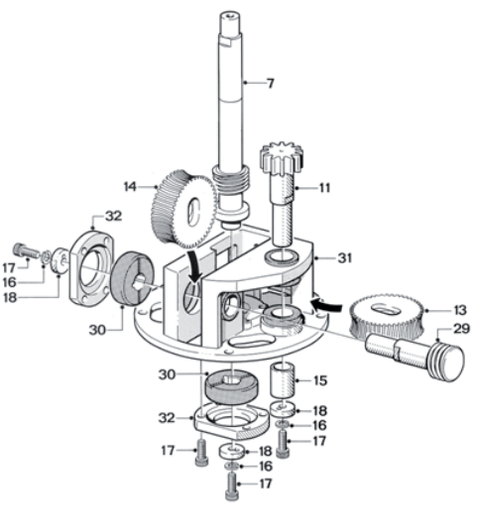

Pos	Qty	Denomination	Item no.
		Service Kit Major for Toftejorg TZ-750	TE55M010
Consisting of:			
	1	Turbine shaft	TE911K
	4	Ball race	TE1261
	1	Hub liner	TE62411*
	1	Cotter pin	TE448
	2	Ball retainer w balls.	TE126S
	1	Main collar, upper	TE127Z1
	1	Main collar, lower	TE127Z2
	1	Collar, hub	TE1273
	1	Horizontal shaft	TE128Z
	1	Service Kit Minor	TE55M000

Pos	Qty	Denomination	Item no.
		Service Kit Major for Toftejorg TZ-750 (PEEK)	TE55M011
Consisting of:			
	1	Turbine shaft	TE911K
	4	Ball race	TE1261
	1	Hub liner	TE62411*
	1	Cotter pin	TE448
	2	Ball retainer w balls.	TE126S
	1	Main collar, upper	TE127Z1
	1	Main collar, lower	TE127Z2
	1	Horizontal shaft	TE128Z
	1	Service Kit Minor	TE55M001

Pos	Qty	Denomination	Item no.
		Service Kit Major for Toftejorg TZ-750 (E-gear)	TE55M410
Consisting of:			
	1	Turbine shaft	TE911K
	4	Ball race	TE1261
	1	Hub liner	TE62411*
	1	Cotter pin	TE448
	2	Ball retainer w balls.	TE126S
	1	Main collar, upper	TE127Z1
	1	Main collar, lower	TE127Z2
	1	Hub collar	TE1273
	1	Horizontal shaft	TE128E
	1	Service Kit Minor	TE55M400

Pos	Qty	Denomination	Item no.
		Service Kit Major for Toftejorg TZ-750 (E-gear, PEEK)	TE55M411
Consisting of:			
	1	Turbine shaft	TE911K
	4	Ball race	TE1261
	1	Hub liner	TE62411*
	1	Cotter pin	TE448
	2	Ball retainer w balls.	TE126S
	1	Main collar, upper	TE127Z1
	1	Main collar, lower	TE127Z2
	1	Hub collar	TE1273
	1	Horizontal shaft	TE128E
	1	Service Kit Minor	TE55M401

Pos	Qty	Denomination	Tool no
		Standard tool kit	TE81B065
Consisting of:			
	1	Hex key	TE134
	1	Hex screwdriver	TE134A
	1	Hex key	TE135
	1	Hex screwdriver	TE135A
	1	Caliper	TE369

Available on request for replacement of collar bush

Pusher for collar bush 2”	TE81B031
Fixture set for collar bush 2”	TE81B032

1.5

Sketch of tools for replacement of Collar Bush

TE81B031 Pusher for 2” gear frame

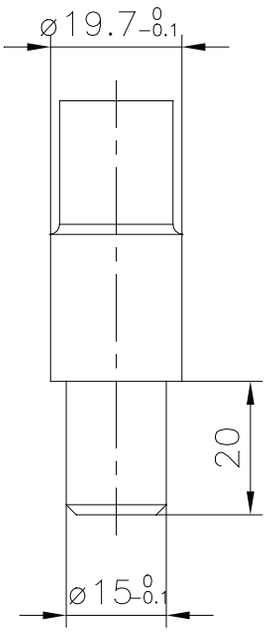

TE81B032 Fixture set for gear frame

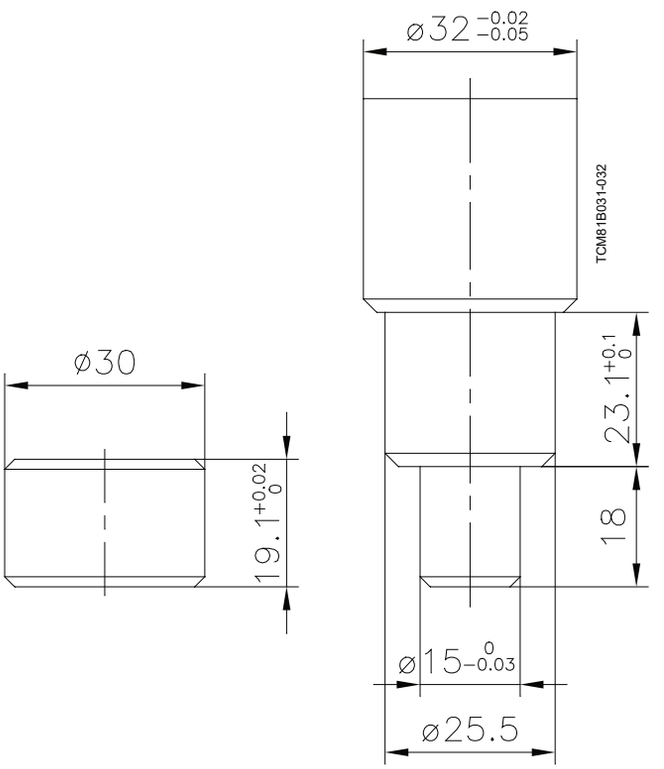

Sketch of tools for replacement of Main Collars

Available on request: TE81B132: Tool for lower collar (2” + 3” TCM) complete

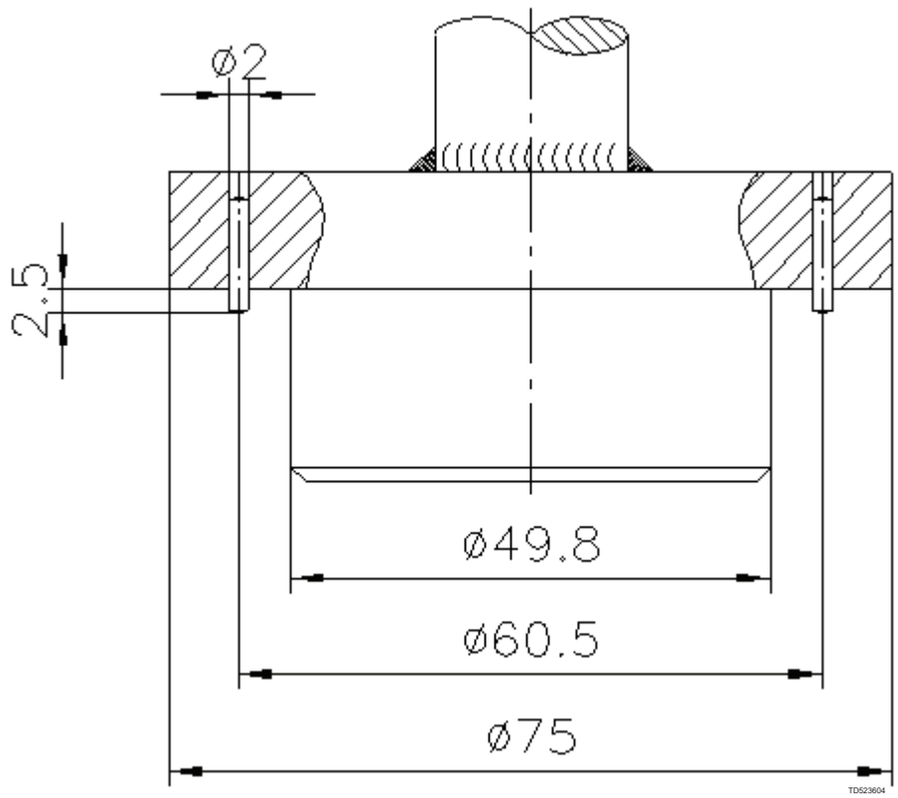

Not manufactured anymore

1.5

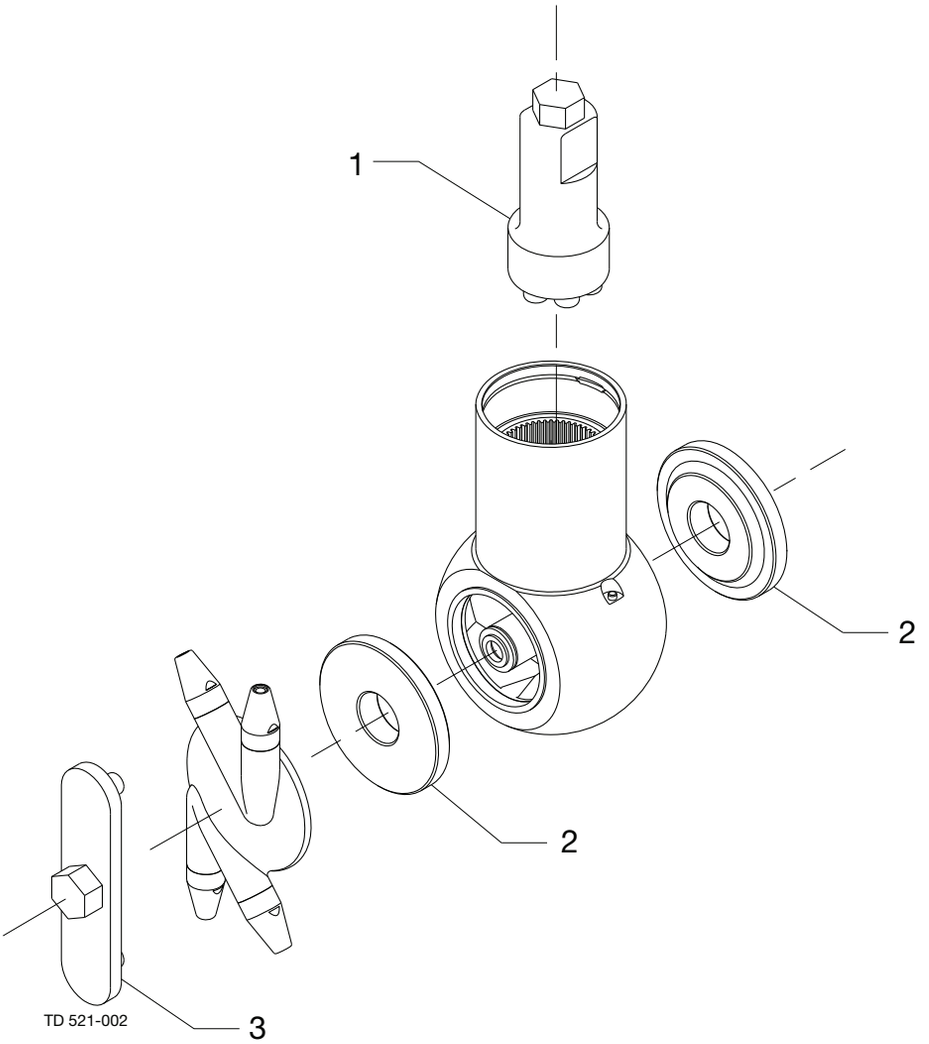

Pos	Qty	Denomination
1	1	Service tool
2	1	Service plates
3	1	Nozzle head tool

Not manufactured anymore

1.5

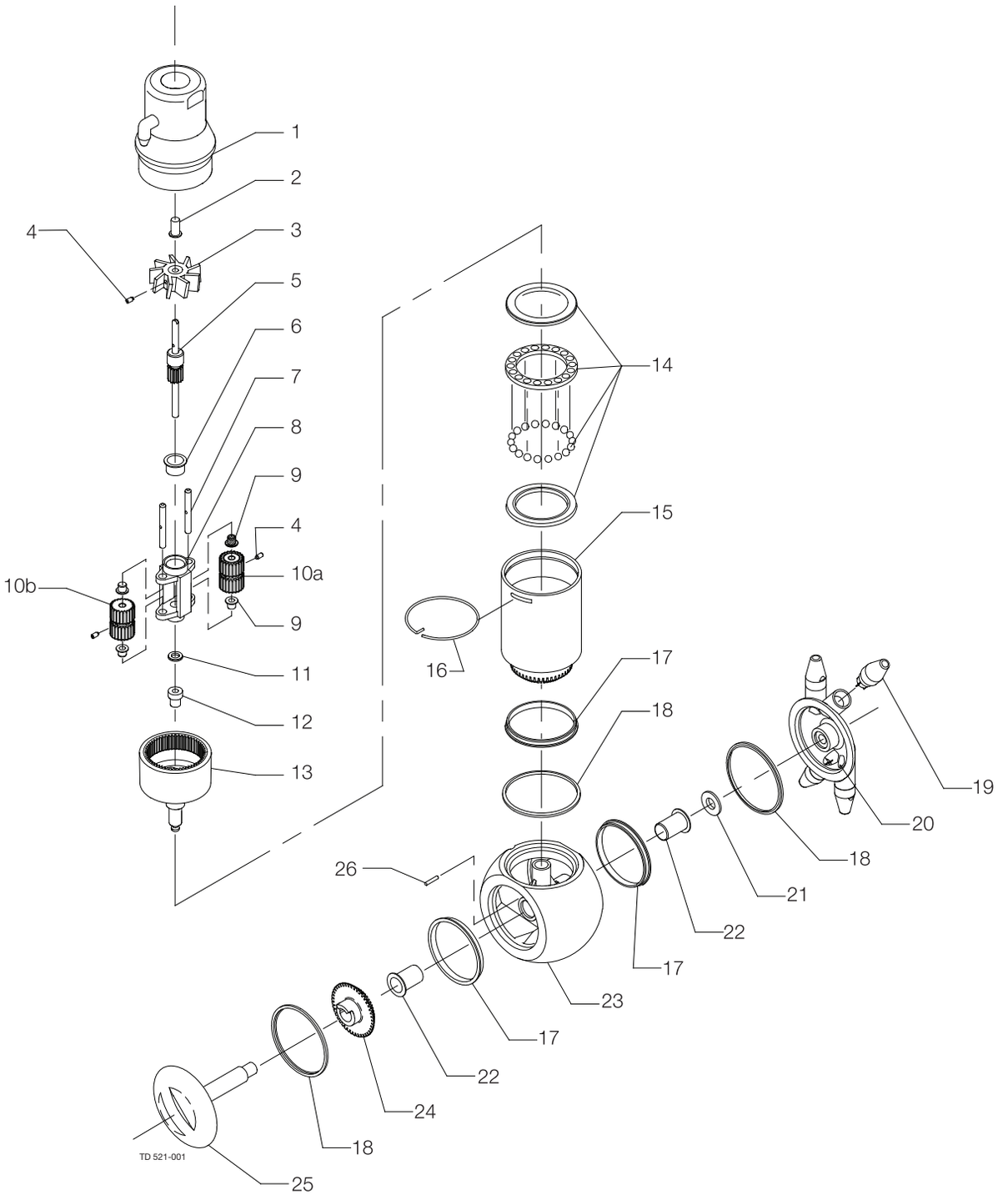

Pos		Qty	Denomination	8 x Ø3	4 x Ø4	8 x Ø4	4 x Ø5	8 x Ø5
			Complete no. BSP female:					
			Complete no. NPT female:					
			Approx. RPM at 5 bar	4.8	4.8	4	4.8	4
1	□	1	Inlet connection, 1" BSP female					
	□	1	Inlet connection, 1" NPT female					
	□	1	Inlet connection, 1½" BSP female					
	□	1	Inlet connection, 1½" NPT female					
2	▲	1	Stator bush					
3		1	Turbine, full curve (incl. pos. 4)					
	□	1	Turbine, 15 deg. pos. (incl. pos. 4)					
	□	1	Turbine, flat (incl. pos. 4)					
	□	1	Turbine, 15 deg. neg. (incl. pos. 4)					
4		3	Hollow set screw					
5		1	Turbine shaft					
6	▲	1	Cartridge bush	9612580901	9612580901	9612580901	9612580901	9612580901
7		2	Planet gear shaft					
8		1	Cartridge					
9	▲	4	Planet gear bush	9612581101	9612581101	9612581101	9612581101	9612581101
10a		1	Planet gear, aligned (incl. pos. 4)					
10b		1	Planet gear, 1/2 tooth displaced (incl. pos. 4)					
11		1	Thrust washer					
12	▲	1	Spider bush					
13		1	Spider					
14		1	Thrust bearing assembly					
15		1	Shell					
16		1	Spring clip					
17		3	Seal insert					
18	▲	3	Seal					
19	□	8	Nozzle ID Ø3					
	□	4	Nozzle ID Ø4					
	□	8	Nozzle ID Ø4					
	□	4	Nozzle ID Ø5					
	□	8	Nozzle ID Ø5					
	□	4	Nozzle ID Ø6 with ext.					
	□	4	Nozzle ID Ø7 with ext.					
	□	4	Nozzle ID Ø8 with ext.					
20	□	1	Nozzle head for 4 nozzles					
	□	1	Nozzle head for 8 nozzles					
21		1	Washer					
22	▲	2	Nozzle head bush					
23		1	Main body					
24		1	Bevel gear					
25		1	Blind nozzle head					
26	▲	1	Pin	9612582101	9612582101	9612582101	9612582101	

Not manufactured anymore

1.5

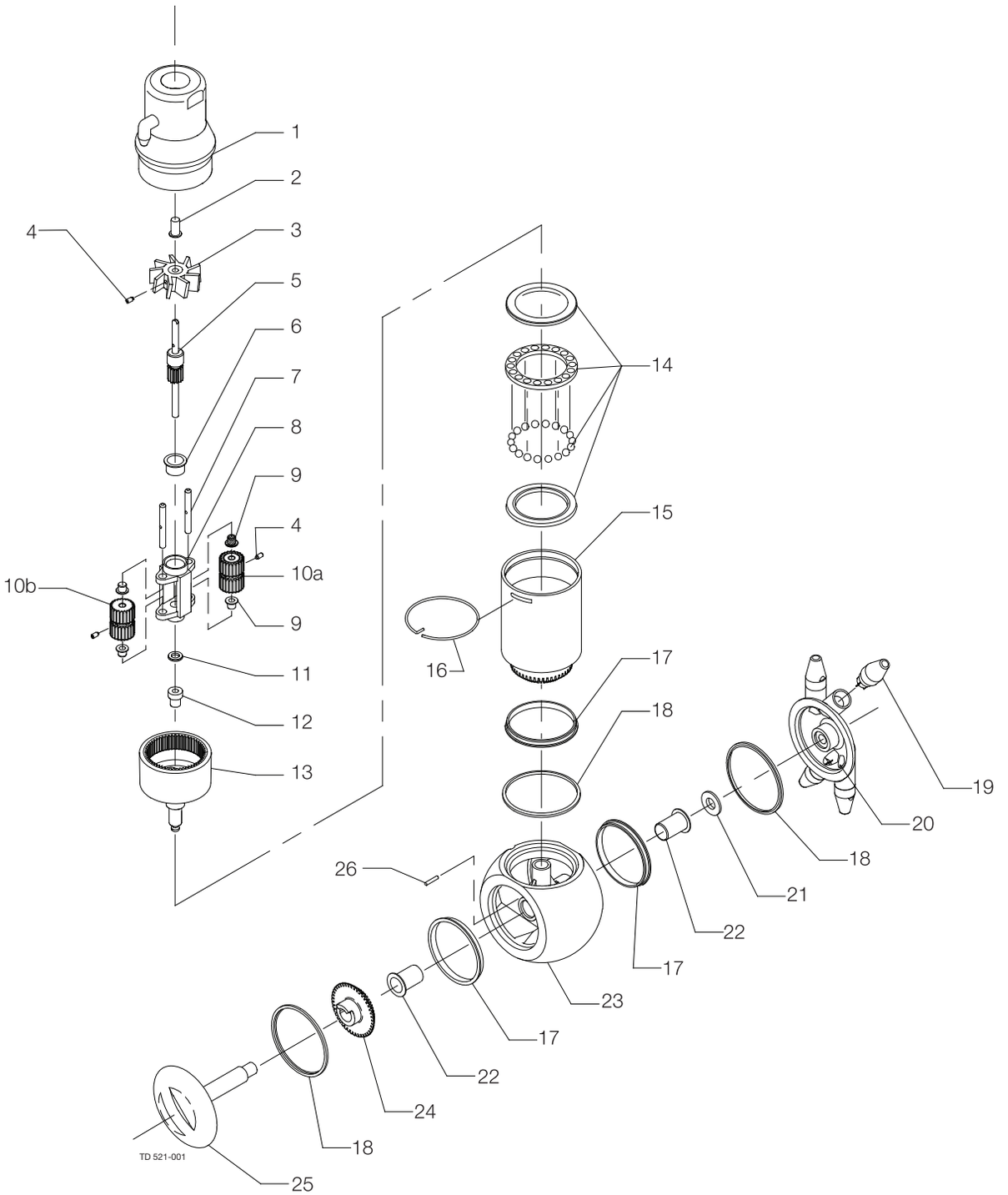

Pos		Qty	Denomination	4 x Ø6	4 x Ø7	4 x Ø7	4 x Ø8
			Approx. RPM at 5 bar	3.2	4	2.7	3.2
1	□	1	Inlet connection, 1" BSP female				
	□	1	Inlet connection, 1" NPT female				
	□	1	Inlet connection, 1½" BSP female				
	□	1	Inlet connection, 1½" NPT female				
2	▲	1	Stator bush				
3	□	1	Turbine, full curve (incl. pos. 4)				
	□	1	Turbine, 15 deg. pos. (incl. pos. 4)				
	□	1	Turbine, flat (incl. pos. 4)				
	□	1	Turbine, 15 deg. neg. (incl. pos. 4)				
4		3	Hollow set screw				
5		1	Turbine shaft				
6	▲	1	Cartridge bush	9612580901	9612580901	9612580901	9612580901
7		2	Planet gear shaft				
8		1	Cartridge				
9	▲	4	Planet gear bush	9612581101	9612581101	9612581101	9612581101
10a		1	Planet gear, aligned (incl. pos. 4)				
10b		1	Planet gear, 1/2 tooth displaced (incl. pos. 4)				
11		1	Thrust washer				
12	▲	1	Spider bush				
13		1	Spider				
14		1	Thrust bearing assembly				
15		1	Shell				
16		1	Spring clip				
17		3	Seal insert				
18	▲	3	Seal				
19	□	8	Nozzle ID Ø3				
	□	4	Nozzle ID Ø4				
	□	8	Nozzle ID Ø4				
	□	4	Nozzle ID Ø5				
	□	8	Nozzle ID Ø5				
	□	4	Nozzle ID Ø6 with ext.				
	□	4	Nozzle ID Ø7 with ext.				
	□	4	Nozzle ID Ø8 with ext.				
20	□	1	Nozzle head for 4 nozzles				
	□	1	Nozzle head for 8 nozzles				
21		1	Washer				
22	▲	2	Nozzle head bush				
23		1	Main body				
24		1	Bevel gear				
25		1	Blind nozzle head				
26	▲	1	Pin	9612582101	9612582101	9612582101	9612582101

	8 x Ø3	4 x Ø4	8 x Ø4	4 x Ø5	8 x Ø5
Service Kits					
Service kits	9611925026	9611925026	9611925026	9611925026	9611925026

	4 x Ø6	4 x Ø7	4 x Ø7	4 x Ø8
Service kits	9611925026	9611925026	9611925026	9611925026

Parts marked with □▲ are included in the service kit.

Recommended Spare parts: Service kit.

Not manufactured anymore

1.5

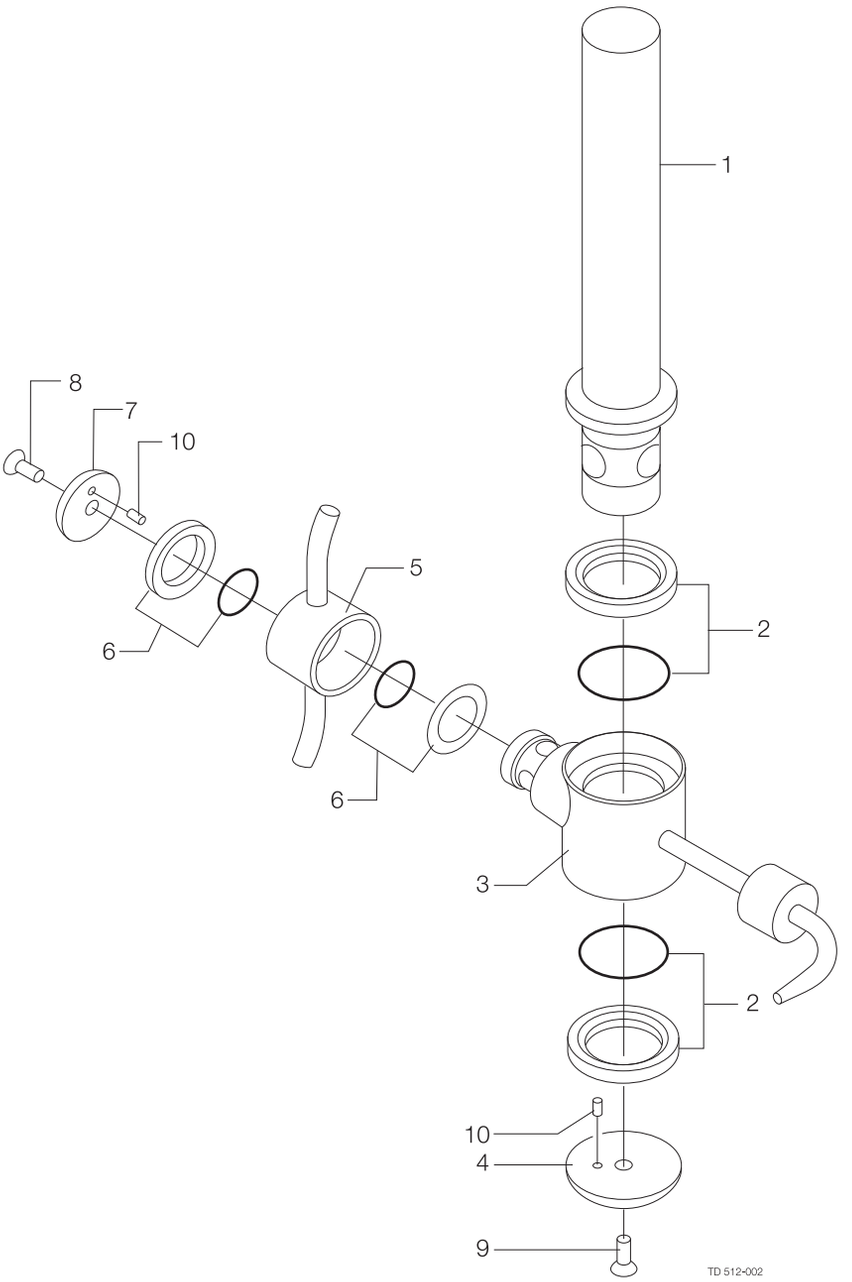

AISI 304

Pos		Qty	Denomination	3161800502
1		1	Admission pipe	
2	□	2	Seal ring	3161800251
3		1	House	
4		1	End cover	
5		1	Rotor	
6	□	2	Seal ring	3161800261
7		1	Rotor cover	
8		1	Screw	9611991148
9		1	Screw	9611991149
10		2	Pin	

Service kit.	□ 9611925001

Parts marked with □ are included in the Service kit.

Recommende spare parts: Service kit.

900-280

Not manufactured anymore

1.5

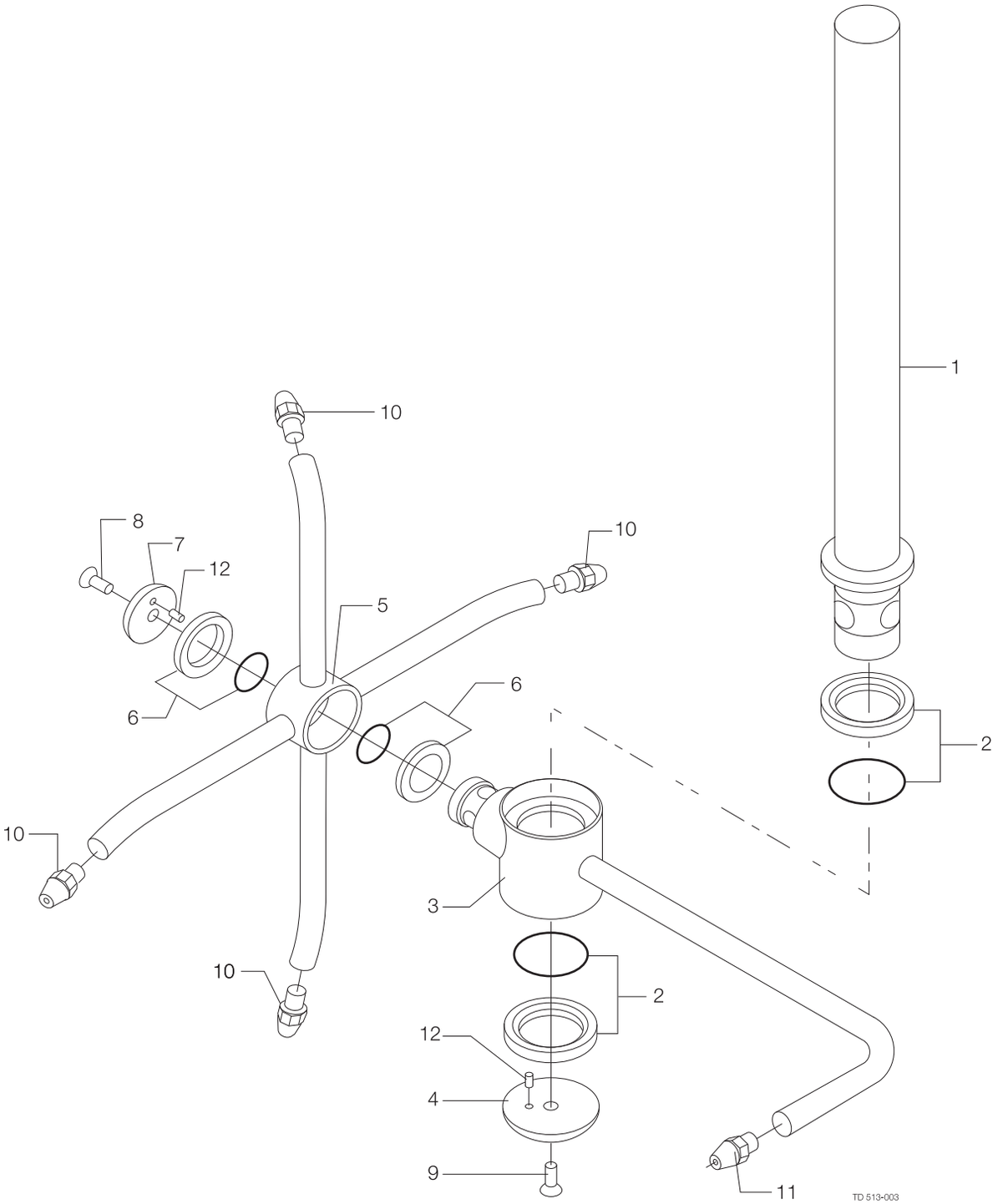

AISI 304

Pos		Qty	Denomination	3161800442
1		1	Admission pipe	
2	□	2	Seal ring	3161800251
3		1	Cleaning turbine house	
4		1	End cover	
5		1	Rotor	
6	□	2	Seal ring	3161800261
7		1	Rotor cover	
8		1	Screw	9611991148
9		1	Screw	9611991149
10		4	Nozzle	
11		1	Nozzle	
12		2	Pin	

Service kit.	□ 9611925001

Parts marked with □ are included in the Service kit.

Recommende spare parts: Service kit.

900-281

Not manufactured anymore

1.5

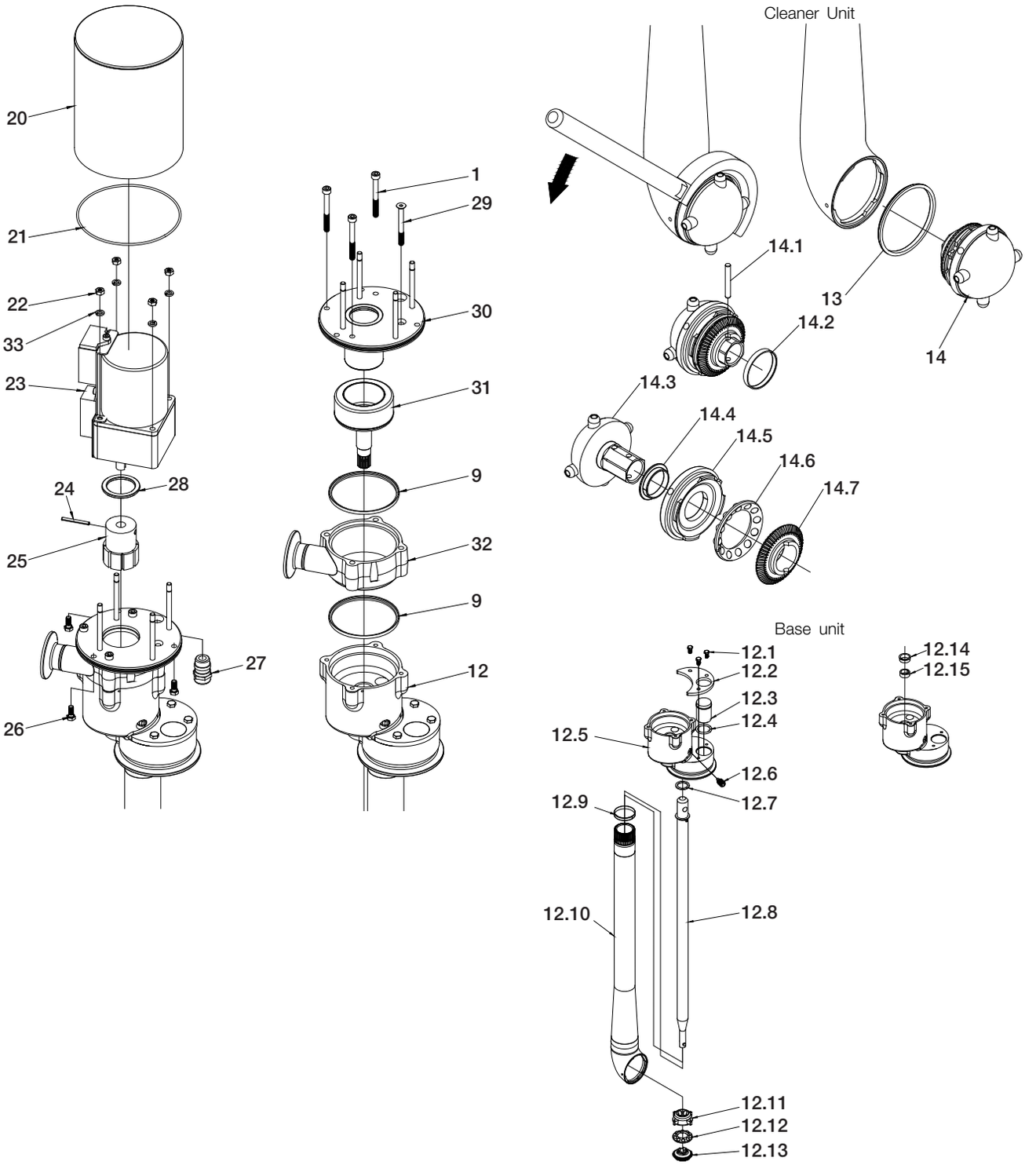

Pos		Qty	Denomination	Item no.	Material	Remark
1		3	Screw	TE51A146	Stainless steel	Spare part
9	□	2	Gasket	TE20B516	Elastomer	Wear part
	□	2	Gasket	TE20B51601	Elastomer	Wear part
	□	2	Gasket	TE20C516	Elastomer	Wear part
12	□	1	Base unit, L = 350 mm	TE20B309	Assembly	
	□	1	Base unit, L = 500 mm	TE20B300	Assembly	
	□	1	Base unit, L = 700 mm	TE20B301	Assembly	
	□	1	Base unit, L = 1000 mm	TE20B302	Assembly	
	□	1	Base unit, L = 1200 mm	TE20B303	Assembly	
	□	1	Base unit, L = 1500 mm	TE20B304	Assembly	
	□	1	Base unit, L = 350 mm	TE20B30901	Assembly, elastomer	
	□	1	Base unit, L = 500 mm	TE20B30001	Assembly, elastomer	
	□	1	Base unit, L = 700 mm	TE20B30101	Assembly, elastomer	
	□	1	Base unit, L = 1000 mm	TE20B30201	Assembly, elastomer	
	□	1	Base unit, L = 1200 mm	TE20B30301	Assembly, elastomer	
	□	1	Base unit, L = 1500 mm	TE20B30401	Assembly, elastomer	
12.1		3	Screw	TE51A172	Stainless steel	Spare part
12.2		1	Bracket	TE20B594	Stainless steel	Spare part
12.3		1	Plug	TE20B642	Stainless steel	Spare part
12.4	□	1	O-ring	TE51T127	Elastomer	Wear part
	□	1	O-ring	TE51T008	Elastomer	Wear part
	□	1	O-ring	TE51T129	Elastomer	Wear part
12.5		1	Base housing		Stainless steel	*Note
12.6		1	Retaining screw	TE20B512	Stainless steel	Spare part
12.7	□	1	Plain seal	TE20B511	Elastomer	Wear part
	□	1	Plain seal	TE20B51101	Elastomer	Wear part
	□	1	Plain seal	TE20C511	Elastomer	Wear part
12.8	□	1	Inner shaft, L = 350 mm	TE20B538	Stainless steel	Spare part
	□	1	Inner shaft, L = 500 mm	TE20B532	Stainless steel	Spare part
	□	1	Inner shaft, L = 700 mm	TE20B533	Stainless steel	Spare part
	□	1	Inner shaft, L = 1000 mm	TE20B534	Stainless steel	Spare part
	□	1	Inner shaft, L = 1200 mm	TE20B535	Stainless steel	Spare part
	□	1	Inner shaft, L = 1500 mm	TE20B536	Stainless steel	Spare part
12.9		1	Bearing ring	TE20B510	Polymer	Wear part
12.10	□	1	Outer tube, L = 350 mm	TE20B310	Stainless steel	Spare part
	□	1	Outer tube, L = 500 mm	TE20B311	Stainless steel	Spare part
	□	1	Outer tube, L = 700 mm	TE20B312	Stainless steel	Spare part
	□	1	Outer tube, L = 1000 mm	TE20B313	Stainless steel	Spare part
	□	1	Outer tube, L = 1200 mm	TE20B314	Stainless steel	Spare part
	□	1	Outer tube, L = 1500 mm	TE20B315	Stainless steel	Spare part
12.11		1	Ball race	TE20B539	Stainless steel	Wear part
12.12		1	Ball ring	TE20B364	Polymer/titanium	Wear part
12.13.		1	Bevel gear	TE20B542	Stainless steel	Wear part
12.14		1	Bearing bush	TE20B513	Polymer	Wear part
12.15		1	Bearing bush	TE20B514	Polymer	Wear part
13	□	1	Seal ring H	TE20B553	Elastomer	Wear part
	□	1	Seal ring H	TE20B55301	Elastomer	Wear part
	□	1	Seal ring H	TE20C553	Elastomer	Wear part
14	□	1	Cleaner unit, 2xø2.0mm	TE20B324	Assembly	
	□	1	Cleaner unit, 2xø3.8mm	TE20B325	Assembly	
	□	1	Cleaner unit, 4xø4.2mm	TE20B326	Assembly	
14.1		1	Pin	TE51C003	Stainless steel	Spare part
14.2		1	Clip ring	TE20B571	Stainless steel	Spare part
14.3	□	1	Cleaner head 2xø2.0mm	TE20B334	Stainless steel	Spare part
	□	1	Cleaner head 2xø3.8mm	TE20B335	Stainless steel	Spare part
	□	1	Cleaner head 4xø4.2mm	TE20B336	Stainless steel	Spare part
14.4		1	Bearing bush	TE20B554	Polymer	Wear part
14.5		1	Retaining ring	TE20B552	Stainless steel	Wear part
14.6		1	Ball ring N	TE20B365	Polymer/titanium	Wear part
14.7		1	Bevel gear	TE20B550	Stainless steel	Wear part
20		1	Motor cover	TE20B347	Stainless steel	Spare part
21		1	O-ring	TE51T125	Elastomer	Spare part
22		4	Nut	TE51A504	Stainless steel	Spare part
23	□	1	El-gear motor (1:36) 220-230V	TE20B380	Assembly	
	□	1	El-gear motor (1:36) 200V	TE20B38001	Assembly	
	□	1	El-gear motor (1:36) 110-115V	TE20B38002	Assembly.	
	□	1	El-gear motor (1:36) 100V	TE20B38003	Assembly.	
	□	1	El-gear motor (1:75) 220-230V	TE20B381	Assembly.	
	□	1	El-gear motor (1:75) 200V	TE20B38101	Assembly.	
	□	1	El-gear motor (1:75) 110-115V	TE20B38102	Assembly.	
	□	1	El-gear motor (1:75) 100V	TE20B38103	Assembly.	

❑ Configuration according to delivery note/order.

*Note: Pos. 12.5 is not sold as single Spare part component but only as part of a machine maintenance/repair order. For further information please contact Alfa Laval Customer Support.

Continues next page ...

24	1	Tubular rivet	TE51C052	Stainless steel	Spare part
25	1	Rotor inner w. magnets	TE20B343	Assembly.	
26	3	Screw	TE51A189	Stainless steel	Spare part
27	1	Union joint	TE51U310	Steel, plated	Spare part
28	1	Guide ring	TE20B630	Stainless steel	Spare part
29	1	Screw	TE51A057	Stainless steel	Spare part
30	1	Motor flange welded E	TE20B344	Stainless steel	Spare part
31	1	Rotor outer w. magnets	TE20B340	Assembly.	
32	1	Inlet housing, Tri-clamp	TE20B351	Stainless steel	Spare part
33	4	Washer	TE51B039	Stainless steel	Spare part

❑ Configuration according to delivery note/order.

*Note: Pos. 12.5 is not sold as single Spare part component but only as part of a machine maintenance/repair order. For further information please contact Alfa Laval Customer Support.

Service intervals

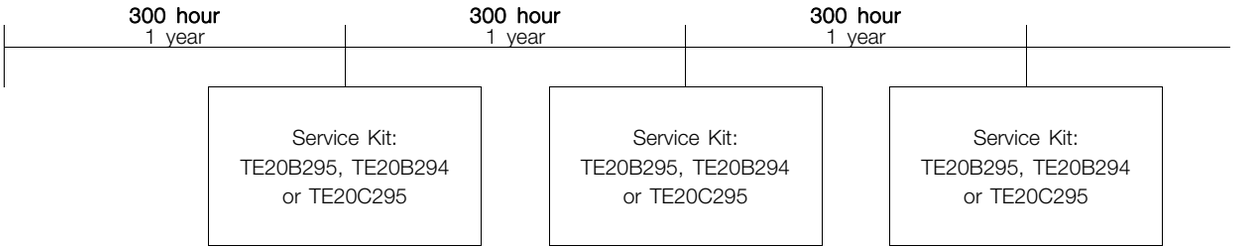

Service Kit in EPDM for
Toftejorg SaniJet 20 motor driven version (electrical/air)
Article no. TE20B295

Pos	Qty	Denomination	Item no no.
12.9	1	Bearing ring, top	TE20B510
12.14	1	Bearing bush D1	TE20B513
12.15	1	Bearing bush D2	TE20B514
12.7	1	Plain seal S	TE20B511
9	2	Gasket D	TE20B516
13	1	Seal ring H	TE20B553
12.4	1	O-ring	TE51T127

Service Kit in FPM (viton) for
Toftejorg SaniJet 20 motor driven version (electrical/air)
Article no. TE20B294

Pos	Qty	Denomination	Item no.
12.9	1	Bearing ring, top	TE20B510
12.14	1	Bearing bush D1	TE20B513
12.15	1	Bearing bush D2	TE20B514
12.7	1	Plain seal S	TE20B51101
9	2	Gasket D	TE20B51601
13	1	Seal ring H	TE20B55301
12.4	1	O-ring	TE51T008

Tools

Pos	Qty	Denomination	Item no.
		Socket Wrench w. pin	TE462A
		Hook spanner	TE20B701

Not manufactured anymore

1.5

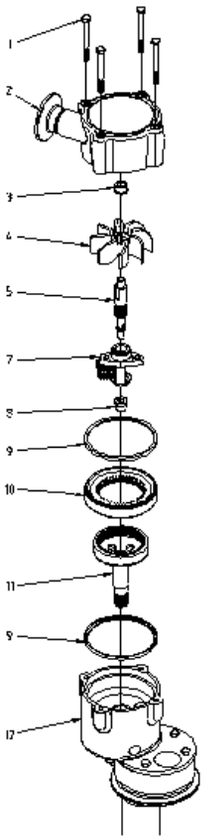

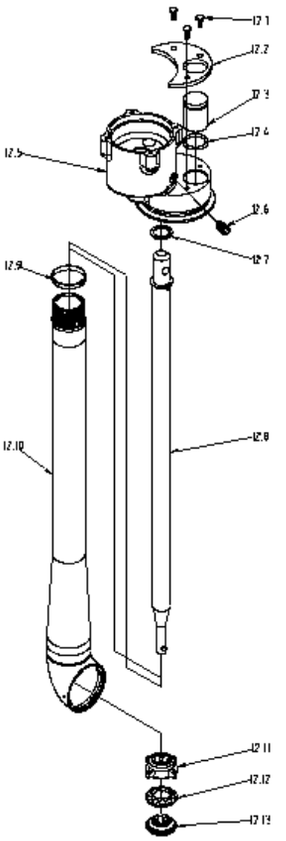

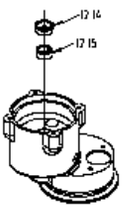

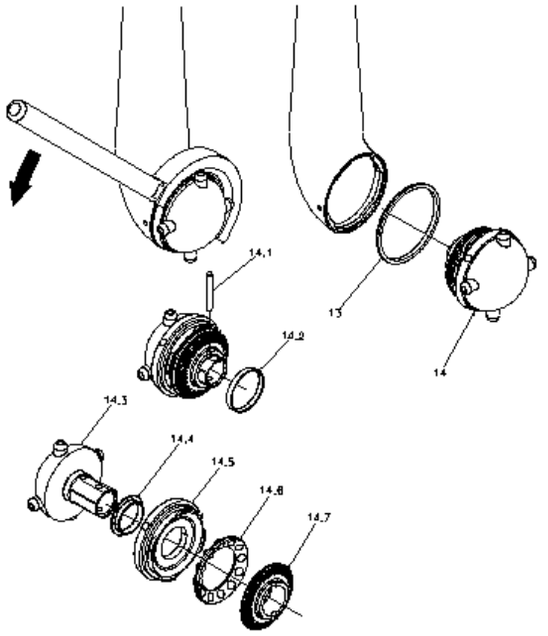

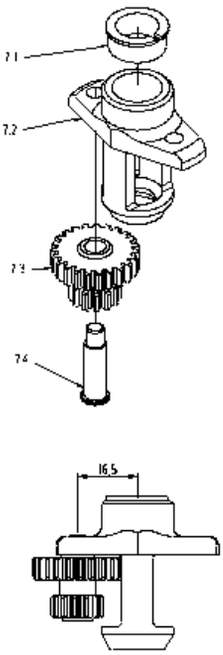

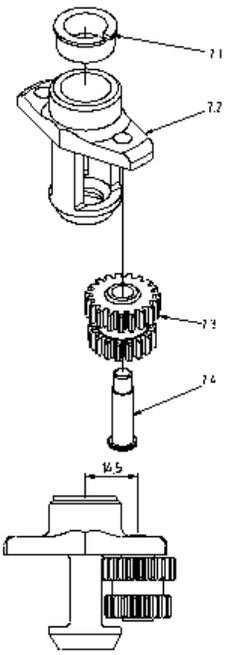

Reference list of parts
Toftejorg SaniJet 20, media driven with improved surface finish (EPDM as standard)

Pos		Qty	Denomination	
1		4	Screw, Stainless steel	TE51A224
2	□	1	Inlet cap ø23, Stainless steel	TE20B371
	□	1	Inlet cap ø11, Stainless steel	TE20B372
3		1	Bearing bush, Polymer	TE20B587
4		1	Impeller, Polymer	TE20B583
5		1	Impeller shaft, Stainless steel	TE20B582
7			Planet gear, assembly	
7.1		1	Bearing bush, Polymer	TE20B600
7.2		1	Planet wheel carrier, Stainless steel	TE20B589
7.3		1	Planet wheel t2, Polymer	TE20B590
		1	Planet wheel t1, Polymer	TE20B592
7.4		1	Shaft f. Planet wheel, Stainless steel	TE20B591
8		1	Bearing bush, Polymer	TE20B588
9	□	2	Gasket, EPDM	TE20B516
	□	2	Gasket, FPM	TE20B51601
	□	2	Gasket, FFKM	TE20C516
10		1	Gear ring t1, Stainless steel	TE20B581
		1	Gear ring t2, Stainless steel	TE20B593
11		1	Output shaft, Stainless steel	TE20B598
12			Base unit, assembly	
12.1		3	Screw, Stainless steel	TE51A172
12.2		1	Bracket, Stainless steel	TE20B594
12.3		1	Plug, Stainless steel	TE20B642
12.4		1	O-ring, EPDM	TE51T127
		1	O-ring, FPM	TE51T008
		1	O-ring, FFKM	TE51T129
12.5		1	Base housing, Stainless steel	TE20B500
12.6		1	Retaining screw, Stainless steel	TE20B512
12.7	□	1	Plain seal, EPDM	TE20B511
	□	1	Plain seal, FPM	TE20B51101
	□	1	Plain seal, FFKM	TE20C511
12.8	□	1	Inner shaft, l = 350 mm, Stainless steel	TE20B538
	□	1	Inner shaft, l = 500 mm, Stainless steel	TE20B532
	□	1	Inner shaft, l = 700 mm, Stainless steel	TE20B533
	□	1	Inner shaft, l = 1000 mm, Stainless steel	TE20B534
	□	1	Inner shaft, l = 1200 mm, Stainless steel	TE20B535
	□	1	Inner shaft, l = 1500 mm, Stainless steel	TE20B536
12.9		1	Bearing ring, Polymer	TE20B510
12.10	□	1	Outer tube, l = 350 mm, Stainless steel	TE20B310
	□	1	Outer tube, l = 500 mm, Stainless steel	TE20B311
	□	1	Outer tube, l = 700 mm, Stainless steel	TE20B312
	□	1	Outer tube, l = 1000 mm, Stainless steel	TE20B313
	□	1	Outer tube, l = 1200 mm, Stainless steel	TE20B314
	□	1	Outer tube, l = 1500 mm, Stainless steel	TE20B315
12.11		1	Ball race, Stainless steel	TE20B539
12.12		1	Ball ring, Polymer/stainless steel	TE20B360
12.13		1	Bevel gear, Stainless steel	TE20B542
12.14		1	Bearing bush, Polymer	TE20B513
12.15		1	Bearing bush, Polymer	TE20B514
13	□	1	Seal ring h, EPDM	TE20B553
	□	1	Seal ring h, FPM	TE20B55301
		1	Seal ring h, FFKM	TE20C553
14	□	1	Cleaner unit, 2xø2.0mm, assembly	TE20B324
	□	1	Cleaner unit, 2xø3.8mm, assembly	TE20B325
	□	1	Cleaner unit, 4xø4.2mm, assembly	TE20B326
14.1		1	Pin, Stainless steel	TE51C003
14.2		1	Clip ring, Stainless steel	TE20B571
14.3	□	1	Cleaner head 2xø2.0mm, Stainless steel	TE20B334
	□	1	Cleaner head 2xø3.8mm, Stainless steel	TE20B335
	□	1	Cleaner head 4xø4.2mm, Stainless steel	TE20B336
14.4		1	Bearing bush, Polymer	TE20B554
14.5		1	Retaining ring, Stainless steel	TE20B552
14.6		1	Ball ring n, Polymer/stainless steel	TE20B361
14.7		1	Bevel gear, Stainless steel	TE20B550

Configuration as delivered marked □

Not manufactured anymore

1.5

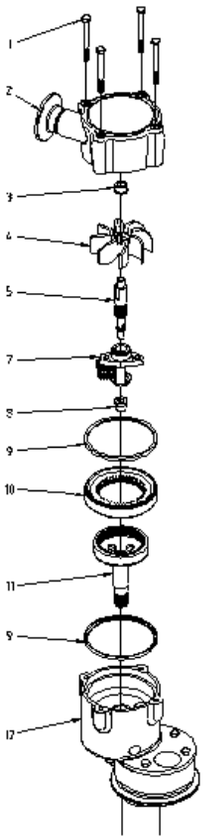

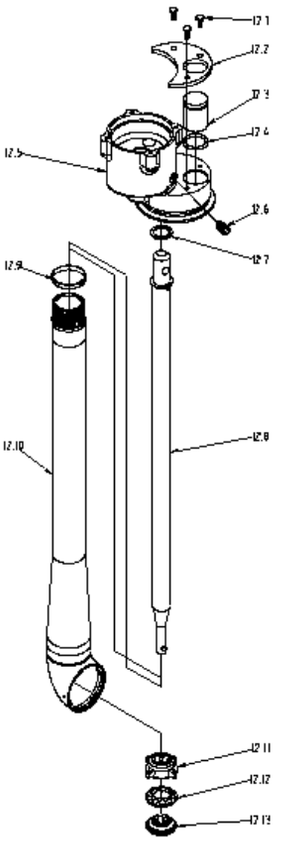

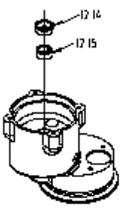

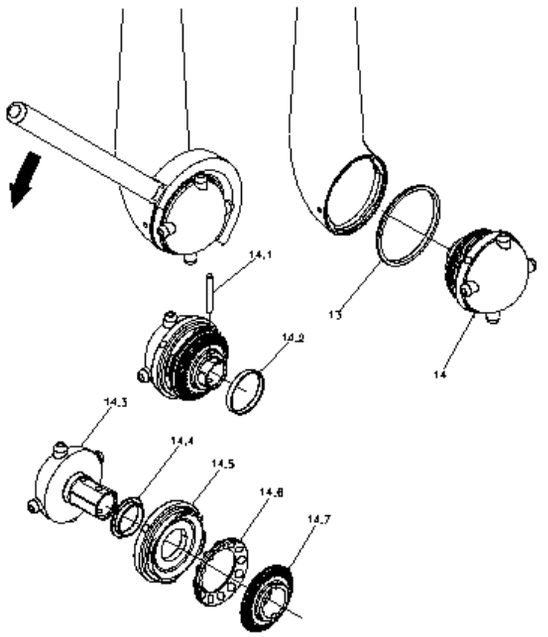

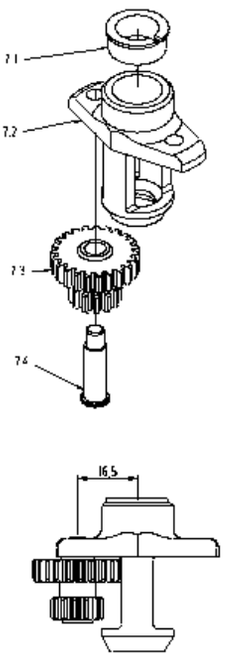

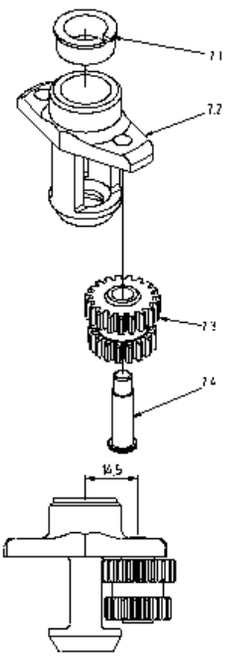

Pos		Qty	Denomination	Item no.
1		4	Screw, Stainless steel	TE51A224
2	□	1	Inlet cap , Stainless steel	TE20E371
	□	1	Inlet cap , Stainless steel	TE20E372
3		1	Bearing bush, Polymer	TE20B587
4		1	Impeller, Polymer	TE20B583
5		1	Impeller shaft, Stainless steel	TE20E582
7			Planet gear, assembly	
7.1		1	Bearing bush, Polymer	TE20B600
7.2		1	Planet wheel carrier, Stainless steel	TE20E589
7.3	□	1	Planet wheel t2, Polymer	TE20B590
	□	1	Planet wheel t1, Polymer	TE20B592
7.4		1	Shaft f. Planet wheel, Stainless steel	TE20E591
8		1	Bearing bush, Polymer	TE20B588
9	□	2	Gasket, EPDM	TE20B516
	□	2	Gasket, FFKM	TE20C516
10	□	1	Gear ring t1, Stainless steel	TE20E581
	□	1	Gear ring t2, Stainless steel	TE20E593
11		1	Output shaft, Stainless steel	TE20E598
12			Base unit, assembly	
12.1		3	Screw, Stainless steel	TE51A172
12.2		1	Bracket, Stainless steel	TE20E594
12.3		1	Plug, Stainless steel	TE20E642
12.4	□	1	O-ring, EPDM	TE51T127
	□	1	O-ring, FFKM	TE51T129
12.5		1	Base housing, Stainless steel	TE20E500
12.6		1	Retaining screw, Stainless steel	TE20B512
12.7	□	1	Plain seal, EPDM	TE20B511
	□	1	Plain seal, FFKM	TE20C511
12.8	□	1	Inner shaft, l = 350 mm, Stainless steel	TE20E538
	□	1	Inner shaft, l = 500 mm, Stainless steel	TE20E532
	□	1	Inner shaft, l = 700 mm, Stainless steel	TE20E533
	□	1	Inner shaft, l = 1000 mm, Stainless steel	TE20E534
	□	1	Inner shaft, l = 1200 mm, Stainless steel	TE20E535
	□	1	Inner shaft, l = 1500 mm, Stainless steel	TE20E536
12.9		1	Bearing ring, Polymer	TE20B510
12.10	□	1	Outer tube, l = 350 mm, Stainless steel	TE20E310
	□	1	Outer tube, l = 500 mm, Stainless steel	TE20E311
	□	1	Outer tube, l = 700 mm, Stainless steel	TE20E312
	□	1	Outer tube, l = 1000 mm, Stainless steel	TE20E313
	□	1	Outer tube, l = 1200 mm, Stainless steel	TE20E314
	□	1	Outer tube, l = 1500 mm, Stainless steel	TE20E315
12.11		1	Ball race, Stainless steel	TE20E539
12.12		1	Ball ring, Polymer/stainless steel	TE20B360
12.13		1	Bevel gear, Stainless steel	TE20E542
12.14		1	Bearing bush, Polymer	TE20B513
12.15		1	Bearing bush, Polymer	TE20B514
13	□	1	Seal ring h, EPDM	TE20B553
	□	1	Seal ring h, FFKM	TE20C553
14	□	1	Cleaner unit, 2xø2.0mm, assembly	TE20E324
	□	1	Cleaner unit, 2xø3.8mm, assembly	TE20E325
	□	1	Cleaner unit, 4xø4.2mm, assembly	TE20E326
14.1		1	Pin, Stainless steel	TE20B572
14.2		1	Clip ring, Stainless steel	TE20E571
14.3	□	1	Cleaner head 2xø2.0mm, Stainless steel	TE20E334
	□	1	Cleaner head 2xø3.8mm, Stainless steel	TE20E335
	□	1	Cleaner head 4xø4.2mm, Stainless steel	TE20E336
14.4		1	Bearing bush, Polymer	TE20B554
14.5		1	Retaining ring, Stainless steel	TE20E552
14.6		1	Ball ring n, Polymer/stainless steel	TE20B361
14.7		1	Bevel gear, Stainless steel	TE20E550

Configuration as delivered marked □□

Not manufactured anymore

1.5

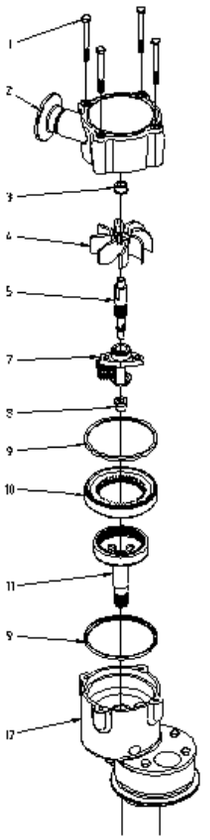

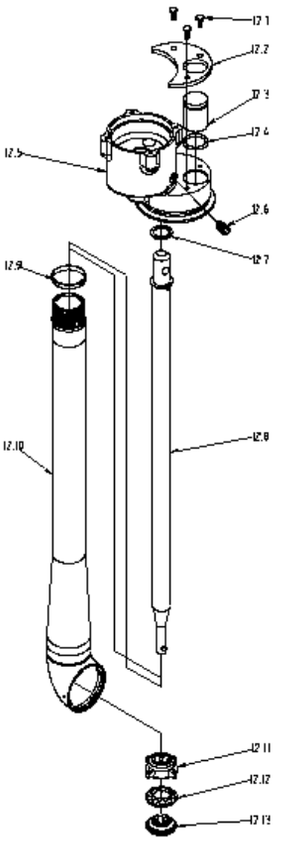

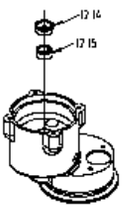

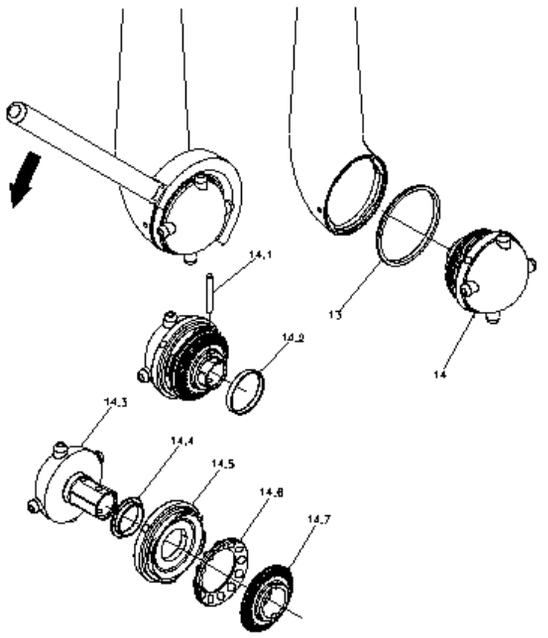

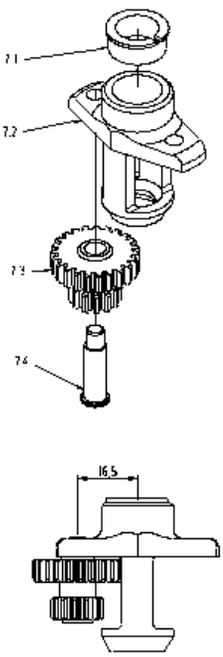

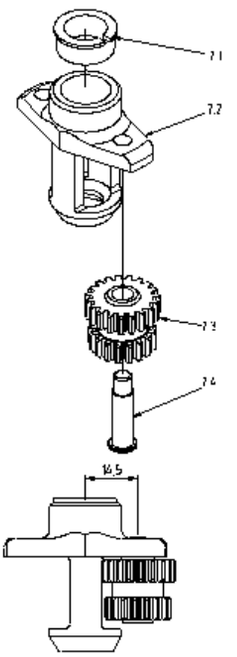

Reference list of parts
Toftejorg SaniJet 20, media driven, hastelloy version (FFKM as standard)

Pos	Qty	Denomination	Item no.
1	4	Screw, Stainless steel	TE51A224
2	1	Inlet cap ø23, Alloy	TE20C371
	1	Inlet cap ø11, Alloy	TE20C372
3	1	Bearing bush, Polymer	TE20B587
4	1	Impeller, Polymer	TE20B583
5	1	Impeller shaft , Alloy	TE20C582
7		Planet gear, assembly	
7.1	1	Bearing bush, Polymer	TE20B600
7.2	1	Planet wheel carrier, Alloy	TE20C589
7.3	1	Planet wheel t2, Polymer	TE20B590
	1	Planet wheel t1, Polymer	TE20B592
7.4	1	Shaft f. Planet wheel, Alloy	TE20C591
8	1	Bearing bush, Polymer	TE20B588
9	2	Gasket, FFKM	TE20C516
10	1	Gear ring t1, Alloy	TE20C581
	1	Gear ring t2, Alloy	TE20C593
11	1	Output shaft, Alloy	TE20C598
12		Base unit, assembly	
12.1	3	Screw, Stainless steel	TE51A172
12.2	1	Bracket, Stainless steel	TE20B594
12.3	1	Plug, Alloy	TE20C642
12.4	1	O-ring, FFKM	TE51T129
12.5	1	Base housing, Alloy	TE20C500
12.6	1	Retaining screw, Stainless steel	TE20B512
12.7	1	Plain seal, FFKM	TE20C511
12.8	1	Inner shaft, l = 350 mm, Alloy	TE20C538
	1	Inner shaft, l = 500 mm, Alloy	TE20C532
	1	Inner shaft, l = 700 mm, Alloy	TE20C533
	1	Inner shaft, l = 1000 mm, Alloy	TE20C534
	1	Inner shaft, l = 1200 mm, Alloy	TE20C535
	1	Inner shaft, l = 1500 mm, Alloy	TE20C536
12.9	1	Bearing ring, Polymer	TE20B510
12.10	1	Outer tube, l = 350 mm, Alloy	TE20C310
	1	Outer tube, l = 500 mm, Alloy	TE20C311
	1	Outer tube, l = 700 mm, Alloy	TE20C312
	1	Outer tube, l = 1000 mm, Alloy	TE20C313
	1	Outer tube, l = 1200 mm, Alloy	TE20C314
	1	Outer tube, l = 1500 mm, Alloy	TE20C315
12.11	1	Ball race, Alloy	TE20C539
12.12	1	Ball ring, Polymer/alloy	TE20C360
12.13	1	Bevel gear, Alloy	TE20C542
12.14	1	Bearing bush, Polymer	TE20B513
12.15	1	Bearing bush, Polymer	TE20B514
13	1	Seal ring h, FFKM	TE20C553
14	1	Cleaner unit, 2xø2.0mm, assembly	TE20C324
	1	Cleaner unit, 2xø3.8mm, assembly	TE20C325
	1	Cleaner unit, 4xø4.2mm, assembly	TE20C326
14.1	1	Pin, Alloy	TE20C655
14.2	1	Clip ring, Alloy	TE20C571
14.3	1	Cleaner head 2xø2.0mm, Alloy	TE20C334
	1	Cleaner head 2xø3.8mm, Alloy	TE20C335
	1	Cleaner head 4xø4.2mm, Alloy	TE20C336
14.4	1	Bearing bush, Polymer	TE20B554
14.5	1	Retaining ring, Alloy	TE20C552
14.6	1	Ball ring n, Polymer/alloy	TE20C361
14.7	1	Bevel gear, Alloy	TE20C550

Not manufactured anymore

1.5

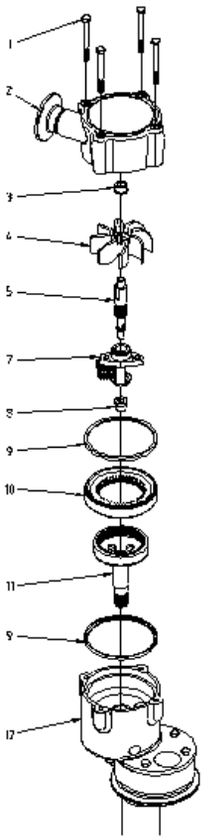

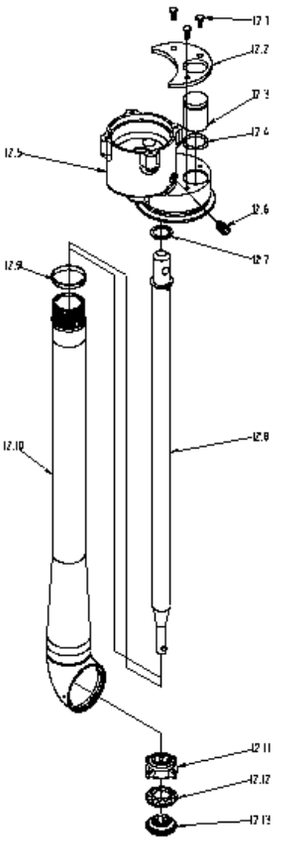

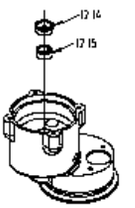

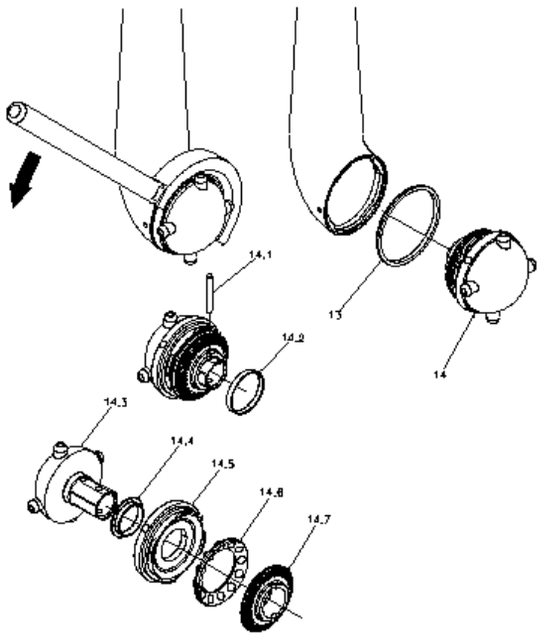

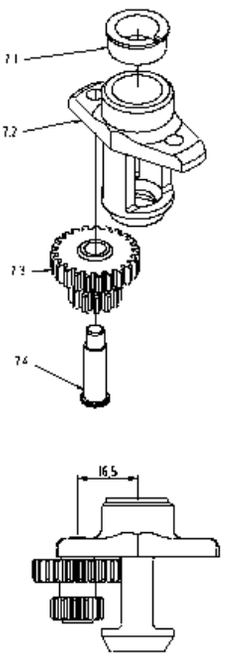

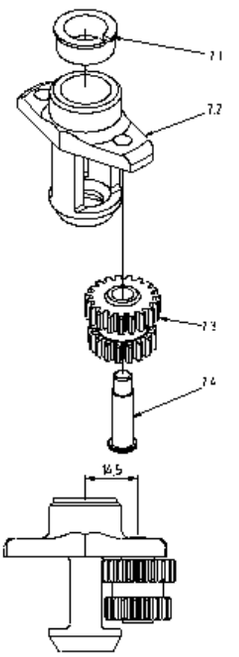

Available add-on's for Spare parts

item no.	Description
TE20xxxx90	• **Declaration of compliance:** - EN 10204 type 3.1 inspection certificate - FDA declaration of compliance - USP class vi (if possible) - TSE declaration
TE20xxxx91 For FPM seals only	• **Declaration of compliance:** - EN 10204 type 3.1 inspection certificate - FDA declaration of compliance - USP class vi (if possible) - TSE declaration
TE20xxxx50 Inner shaft pos no. 12.8 and outer pipe pos no. 12.10 only	• **Declaration of compliance:** - EN 10204 type 3.1 inspection certificate • **FDA declaration of compliance** - USP class vi (if possible) - TSE declaration • **Weld-log documentation (if necessary) as hardcopy**

Service intervals

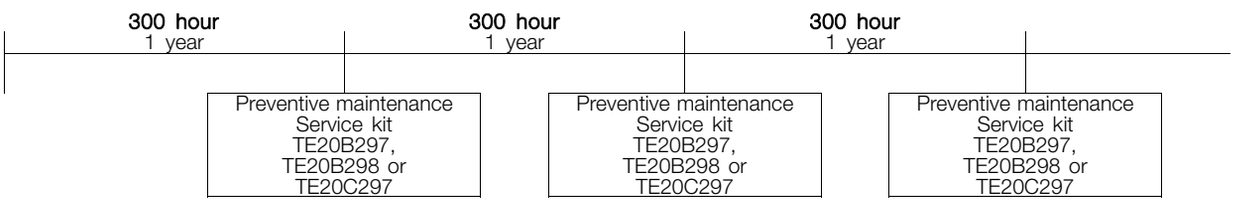

Not manufactured anymore

1.5

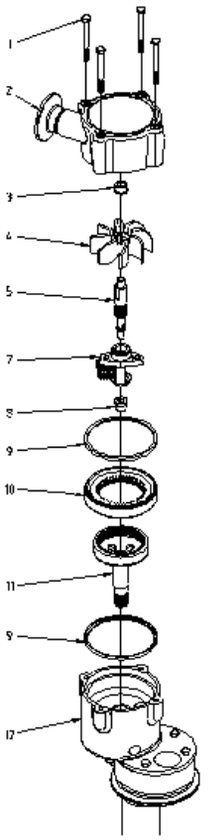

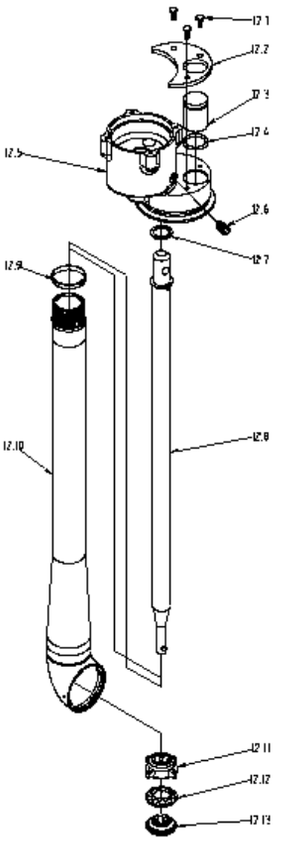

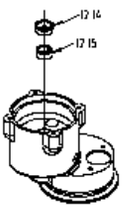

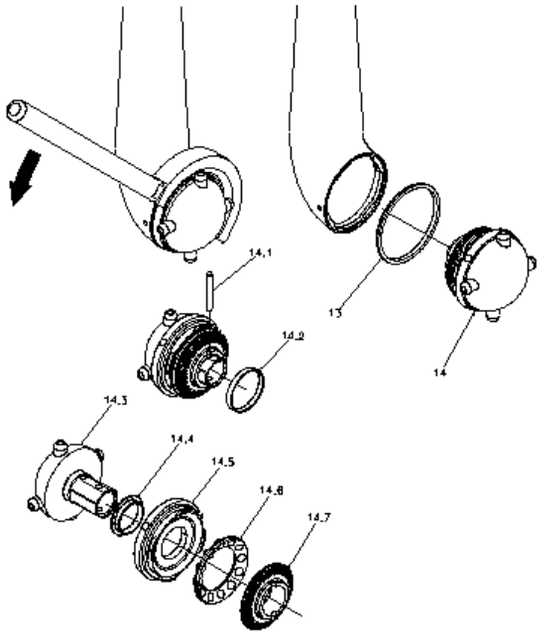

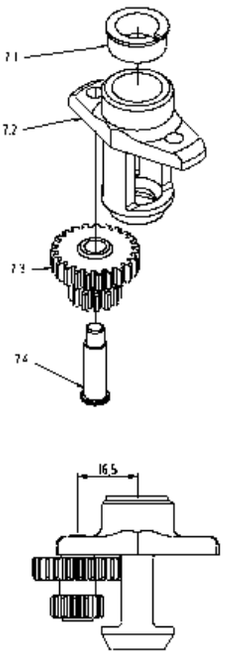

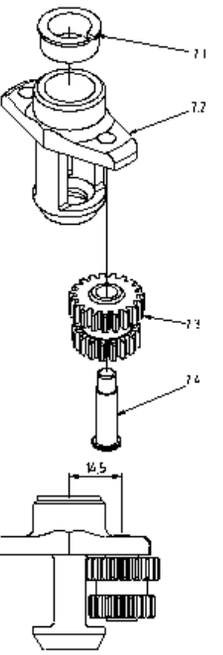

Service kit in EPDM for Toftejorg SaniJet 20 media driven version

Pos	Qty	Denomination	Item no.
3	1	Bearing bushing m, EPDM	TE20B587
7.1	1	Bearing bushing d1, EPDM	TE20B600
8	1	Bearing bushing , EPDM	TE20B588
9	2	Gasket d, EPDM	TE20B516
12.4	1	O-ring , EPDM	TE51T127
12.7	1	Plain seal s, EPDM	TE20B511
12.9	1	Bearing ring, top, EPDM	TE20B510
12.14	1	Bearing bush d1, EPDM	TE20B513
12.15	1	Bearing bush d2, EPDM	TE20B514
13	1	Seal ring h, EPDM	TE20B553
14.4	1	Bearing bush, EPDM	TE20B554

Service kit in FPM (viton) for Toftejorg SaniJet 20 media driven version

Pos	Qty	Denomination	Item no.
3	1	Bearing bushing m, FPM	TE20B587
7.1	1	Bearing bushing d1, FPM	TE20B600
8	1	Bearing bushing , FPM	TE20B588
9	2	Gasket d, FPM	TE20B51601
12.4	1	O-ring , FPM	TE51T008
12.7	1	Plain seal s, FPM	TE20B51101
12.9	1	Bearing ring, top, FPM	TE20B510
12.14	1	Bearing bush d1, FPM	TE20B513
12.15	1	Bearing bush d2, FPM	TE20B514
13	1	Seal ring h, FPM	TE20B55301
14.4	1	Bearing bush, FPM	TE20B554

Service kit in FFKM (perlast) for Toftejorg SaniJet 20 media driven version

Pos	Qty	Denomination	Item no.
3	1	Bearing bushing m, FFKM	TE20B587
7.1	1	Bearing bushing d1, FFKM	TE20B600
8	1	Bearing bushing , FFKM	TE20B588
9	2	Gasket d, FFKM	TE20C516
12.4	1	O-ring , FFKM	TE51T129
12.7	1	Plain seal s, FFKM	TE20C511
12.9	1	Bearing ring, top, FFKM	TE20B510
12.14	1	Bearing bush d1, FFKM	TE20B513
12.15	1	Bearing bush d2, FFKM	TE20B514
13	1	Seal ring h, FFKM	TE20C553
14.4	1	Bearing bush, FFKM	TE20B554

Tools

Pos	Qty	Denomination	Reference no.
		Socket wrench w. Pin	TE462A
		Hook spanner	TE20B701

Not manufactured anymore

1.5

Alfa Laval Toftejorg SaniJet 20 - obsolete design

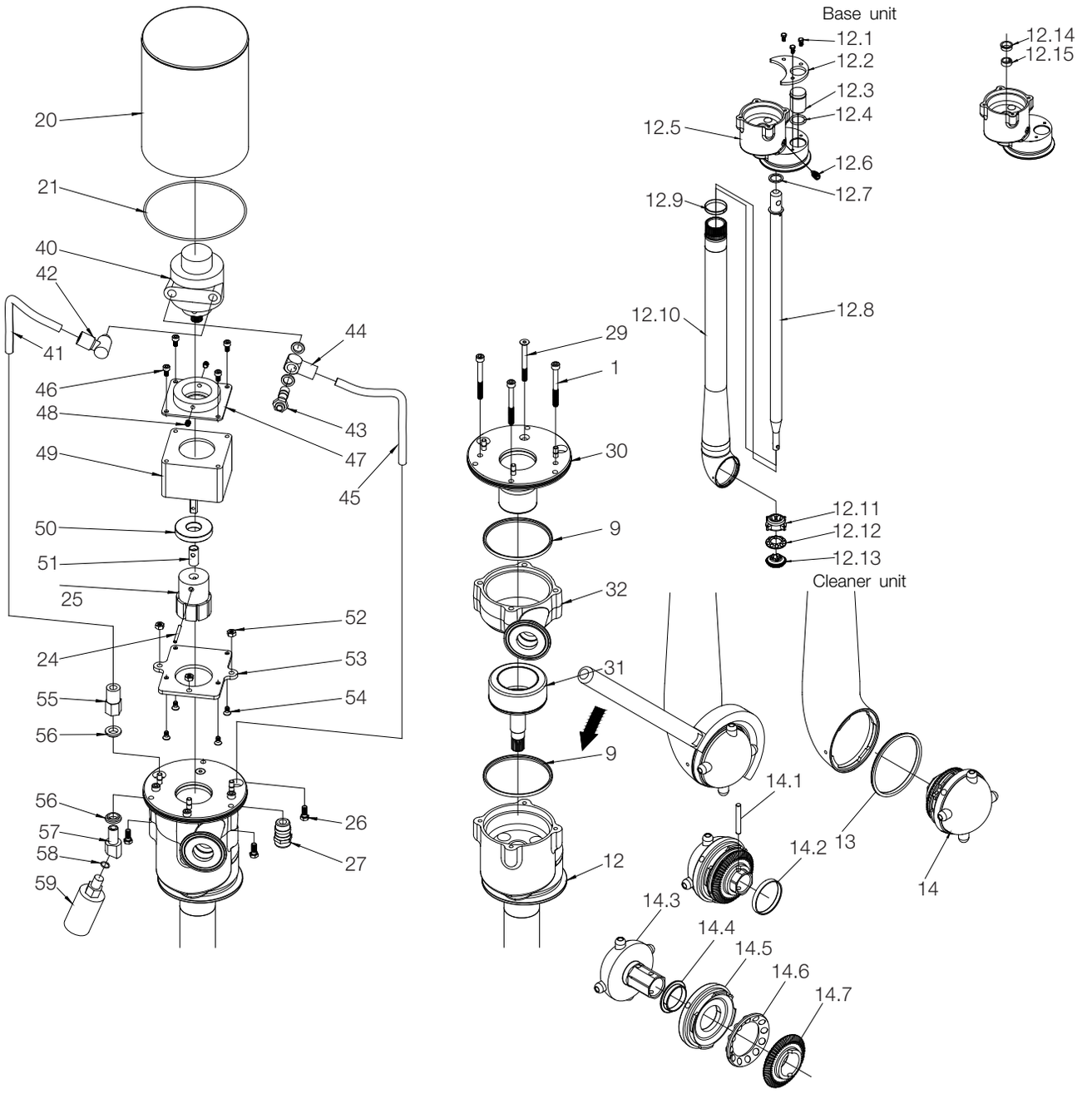

Reference List of Parts
Toftejorg SaniJet 20, Air Driven (EPDM as standard)

Pos		Qty	Denomination	Item no.	Remark
1		3	Screw , Stainless steel	TE51A146	Spare part
9	□	2	Gasket, Elastomer	TE20B516	Wear part
	□	2	Gasket, Elastomer	TE20B51601	Wear part
12	□	1	Base unit, L = 350 mm, assembly	TE20B309	
	□	1	Base unit, L = 500 mm, assembly	TE20B300	
	□	1	Base unit, L = 700 mm, assembly	TE20B301	
	□	1	Base unit, L = 1000 mm, assembly	TE20B302	
	□	1	Base unit, L = 1200 mm, assembly	TE20B303	
	□	1	Base unit, L = 1500 mm, assembly	TE20B304	
	□	1	Base unit, L = 350 mm, assembly, elastomer	TE20B30901	
	□	1	Base unit, L = 500 mm, assembly, elastomer	TE20B30001	
	□	1	Base unit, L = 700 mm, assembly, elastomer	TE20B30101	
	□	1	Base unit, L = 1000 mm, assembly, elastomer	TE20B30201	
	□	1	Base unit, L = 1200 mm, assembly, elastomer	TE20B30301	
	□	1	Base unit, L = 1500 mm, assembly, elastomer	TE20B30401	
12.1		3	Screw, Stainless steel	TE51A172	Spare part
12.2		1	Bracket, Stainless steel	TE20B594	Spare part
12.3		1	Plug, Stainless steel	TE20B642	Spare part
12.4	□	1	O-ring, Elastomer	TE51T127	Wear part
	□	1	O-ring, Elastomer	TE51T008	Wear part
	□	1	O-ring, Elastomer	TE51T129	Wear part
12.5		1	Base housing, Stainless steel		*Note
12.6		1	Retaining screw, Stainless steel	TE20B512	Spare part
12.7	□	1	Plain seal, Elastomer	TE20B511	Wear part
	□	1	Plain seal, Elastomer	TE20B51101	Wear part
	□	1	Plain seal, Elastomer	TE20C511	Wear part
12.8	□	1	Inner shaft, L = 350 mm, Stainless steel	TE20B538	Spare part
	□	1	Inner shaft, L = 500 mm, Stainless steel	TE20B532	Spare part
	□	1	Inner shaft, L = 700 mm, Stainless steel	TE20B533	Spare part
	□	1	Inner shaft, L = 1000 mm, Stainless steel	TE20B534	Spare part
	□	1	Inner shaft, L = 1200 mm, Stainless steel	TE20B535	Spare part
	□	1	Inner shaft, L = 1500 mm, Stainless steel	TE20B536	Spare part
12.9		1	Bearing ring, Polymer	TE20B510	Wear part
12.10	□	1	Outer tube, L = 350 mm, Stainless steel	TE20B310	Spare part
	□	1	Outer tube, L = 500 mm, Stainless steel	TE20B311	Spare part
	□	1	Outer tube, L = 700 mm, Stainless steel	TE20B312	Spare part
	□	1	Outer tube, L = 1000 mm, Stainless steel	TE20B313	Spare part
	□	1	Outer tube, L = 1200 mm, Stainless steel	TE20B314	Spare part
	□	1	Outer tube, L = 1500 mm, Stainless steel	TE20B315	Spare part
12.11		1	Ball race, Stainless steel	TE20B539	Wear part
12.12		1	Ball ring, Polymer/Stainless steel	TE20B360**	Wear part
12.13		1	Bevel gear, Stainless steel	TE20B542	Wear part
12.14		1	Bearing bush, Polymer	TE20B513	Wear part
12.15		1	Bearing bush, Polymer	TE20B514	Wear part
13	□	1	Seal ring H, Elastomer	TE20B553	Wear part
	□	1	Seal ring H, Elastomer	TE20B55301	Wear part
	□	1	Seal ring H, Elastomer	TE20C553	Wear part
14	□	1	Cleaner unit, 2xø2.0mm, assembly	TE20B324	
	□	1	Cleaner unit, 2xø3.8mm, assembly	TE20B325	
	□	1	Cleaner unit, 4xø4.2mm, assembly	TE20B326	
14.1		1	Pin, Stainless steel	TE51C003	Spare part
14.2		1	Clip ring, Stainless steel	TE20B571	Spare part
14.3	□	1	Cleaner head 2xø2.0mm, Stainless steel	TE20B334	Spare part
	□	1	Cleaner head 2xø3.8mm, Stainless steel	TE20B335	Spare part
	□	1	Cleaner head 4xø4.2mm, Stainless steel	TE20B336	Spare part
14.4		1	Bearing bush, Polymer	TE20B554	Wear part
14.5		1	Retaining ring, Stainless steel	TE20B552	Wear part
14.6		1	Ball ring N, Polymer/Stainless steel	TE20B361	Wear part
14.7		1	Bevel gear, Stainless steel	TE20B550	Wear part
20		1	Motor cover, Stainless steel	TE20B347	Spare part
21		1	O-ring, Elastomer	TE51T125	Spare part
24		1	Tubular rivet, Stainless steel	TE51C052	Spare part
25		1	Rotor inner w. magnets, Steel	TE20B343	Spare part
26		3	Screw, Stainless steel	TE51A189	Spare part
27		1	Metal cable gland, PG9, Brass, Nickel-pl.	TE51U310	Spare part
29		1	Screw, Stainless steel	TE51A057	Spare part

Please note that some of the polymer parts are in PEEK, which is not resistant to concentrated sulfuric acid.

*Note: Pos. 12.5 is not sold as single Spare part component but only as part of a machine maintenance/repair order. For further information please contact Alfa Laval Customer Support.

**Note: Special Polymer/Titanium version available for e.g. WFI application - Item# TE20B364.

Continues next page ...

30	1	Motor flange welded A, Stainless steel	TE20B345	Spare part
31	1	Rotor outer complete, Stainless steel/steel	TE20B340	Spare part
32	1	Inlet housing 1" Tri-clamp, Stainless steel	TE20B351	Spare part
40	1	Air motor , assembly	TE20B390	
41	1	Air tubing, PU, 230mm	TE51U305	Spare part
42	1	Swivel push-in elbow, Brass, Nickel-pl.	TE51U388	Spare part
43	1	Flow regulator f. banjo fitting, Brass, Nickel-pl.	TE51U008	Spare part
44	1	Banjo fitting, push-in , Brass, Nickel-pl.	TE51U384	Spare part
45	0	Air tubing, PU - Customer Supply	(TE51U305)	Spare part
46	4	Screw, Stainless steel	TE51A098	Spare part
47	1	Connector flange, Stainless steel	TE20B637	Spare part
48	2	Pointed screw , Stainless steel	TE51A018	Spare part
49	1	Gear box 1:100 f. Air motor, assembly	TE20B636	
50	1	Guide ring, Stainless steel	TE20B633	Spare part
51	1	Bush f. Rotor Air motor, Stainless steel	TE20B631	Spare part
52	3	Nut, Stainless steel	TE51A504	Spare part
53	1	Flange for gear, Stainless steel	TE20B634	Spare part
54	4	Screw , Stainless steel	TE51A049	Spare part
55	1	Straight connector, push-in, Brass, Nickel-pl.	TE51U387	Spare part
56	2	Seal ring, Polymer - black	TE20B645	Spare part
57	1	Adapter f. Silencer, Stainless steel	TE20B644	Spare part
58	1	O-ring, Elastomer	TE51T041	Spare part
59	1	Silencer incl. in Air motor	(TE51U005)	Spare part

Please note that some of the polymer parts are in PEEK, which is not resistant to concentrated sulfuric acid.

*Note: Pos. 12.5 is not sold as single Spare part component but only as part of a machine maintenance/repair order. For further information please contact Alfa Laval Customer Support.

**Note: Special Polymer/Titanium version available for e.g. WFI application - Item# TE20B364.

Reference List of Parts
Toftejorg SaniJet 20, Air Driven with improved surface finish (EPDM as standard)

Pos		Qty	Denomination	Item no.	Remark
1		3	Screw , Stainless steel	TE51A146	Spare part
9	□	2	Gasket, Elastomer	TE20B516	Wear part
	□	2	Gasket, Elastomer	TE20B51601	Wear part
	□	2	Gasket, Elastomer	TE20C516	Wear part
12	□	1	Base unit, L = 350 mm, assembly	TE20E309	
	□	1	Base unit, L = 500 mm, assembly	TE20E300	
	□	1	Base unit, L = 700 mm, assembly	TE20E301	
	□	1	Base unit, L = 1000 mm, assembly	TE20E302	
	□	1	Base unit, L = 1200 mm, assembly	TE20E303	
	□	1	Base unit, L = 1500 mm, assembly	TE20E304	
	□	1	Base unit, L = 350 mm, assembly, elastomer	TE20E30901	
	□	1	Base unit, L = 500 mm, assembly, elastomer	TE20E30001	
	□	1	Base unit, L = 700 mm, assembly, elastomer	TE20E30101	
	□	1	Base unit, L = 1000 mm, assembly, elastomer	TE20E30201	
	□	1	Base unit, L = 1200 mm, assembly, elastomer	TE20E30301	
	□	1	Base unit, L = 1500 mm, assembly, elastomer	TE20E30401	
	□	1	Base unit, L = 350 mm, assembly, elastomer	TE20E30904	
	□	1	Base unit, L = 500 mm, assembly, elastomer	TE20E30004	
	□	1	Base unit, L = 700 mm, assembly, elastomer	TE20E30104	
	□	1	Base unit, L = 1000 mm, assembly, elastomer	TE20E30204	
	□	1	Base unit, L = 1200 mm, assembly, elastomer	TE20E30304	
	□	1	Base unit, L = 1500 mm, assembly, elastomer	TE20E30404	
12.1		3	Screw, Stainless steel	TE20E654	Spare part
12.2		1	Bracket, Stainless steel	TE20E594	Spare part
12.3		1	Plug, Stainless steel	TE20E642	Spare part
12.4		1	O-ring, Elastomer	TE51T127	Wear part
12.5		1	Base housing, Stainless steel		*Note
12.6		1	Retaining screw, Stainless steel	TE20B512	Spare part
12.7		1	Plain seal, Elastomer	TE20B511	Wear part
		1	Plain seal, Elastomer	TE20B51101	Wear part
		1	Plain seal, Elastomer	TE20C511	Wear part
12.8	□	1	Inner shaft, L = 350 mm, Stainless steel	TE20E538	Spare part
	□	1	Inner shaft, L = 500 mm, Stainless steel	TE20E532	Spare part
	□	1	Inner shaft, L = 700 mm, Stainless steel	TE20E533	Spare part
	□	1	Inner shaft, L = 1000 mm, Stainless steel	TE20E534	Spare part
	□	1	Inner shaft, L = 1200 mm, Stainless steel	TE20E535	Spare part
	□	1	Inner shaft, L = 1500 mm, Stainless steel	TE20E536	Spare part
12.9		1	Bearing ring, Polymer	TE20B510	Wear part
12.10	□	1	Outer tube, L = 350 mm, Stainless steel	TE20E310	Spare part
	□	1	Outer tube, L = 500 mm, Stainless steel	TE20E311	Spare part
	□	1	Outer tube, L = 700 mm, Stainless steel	TE20E312	Spare part
	□	1	Outer tube, L = 1000 mm, Stainless steel	TE20E313	Spare part
	□	1	Outer tube, L = 1200 mm, Stainless steel	TE20E314	Spare part
	□	1	Outer tube, L = 1500 mm, Stainless steel	TE20E315	Spare part
12.11		1	Ball race, Stainless steel	TE20E539	Wear part
12.12		1	Ball ring, Polymer/Stainless steel	TE20B360**	Wear part
12.13		1	Bevel gear, Stainless steel	TE20E542	Wear part
12.14		1	Bearing bush, Polymer	TE20B513	Wear part
12.15		1	Bearing bush, Polymer	TE20B514	Wear part
13		1	Seal ring H, Elastomer	TE20B553	Wear part
		1	Seal ring H, Elastomer	TE20B55301	Wear part
		1	Seal ring H, Elastomer	TE20C553	Wear part
14	□	1	Cleaner unit, 2xø2.0mm, assembly	TE20E324	
	□	1	Cleaner unit, 2xø3.8mm, assembly	TE20E325	
	□	1	Cleaner unit, 4xø4.2mm, assembly	TE20E326	
14.1		1	Pin, Stainless steel	TE20E572	Spare part
14.2		1	Clip ring, Stainless steel	TE20E571	Spare part
14.3	□	1	Cleaner head 2xø2.0mm, Stainless steel	TE20E334	Spare part
	□	1	Cleaner head 2xø3.8mm, Stainless steel	TE20E335	Spare part
	□	1	Cleaner head 4xø4.2mm, Stainless steel	TE20E336	Spare part
14.4		1	Bearing bush, Polymer	TE20B554	Wear part
14.5		1	Retaining ring, Stainless steel	TE20E552	Wear part
14.6		1	Ball ring N, Polymer/Stainless steel	TE20B361	Wear part
14.7		1	Bevel gear, Stainless steel	TE20E550	Wear part
20		1	Motor cover, Stainless steel	TE20B347	Spare part
21		1	O-ring, Elastomer	TE51T125	Spare part
24		1	Tubular rivet, Stainless steel	TE51C052	Spare part
25		1	Rotor inner w. magnets, Steel	TE20B343	Spare part

Please note that some of the polymer parts are in PEEK, which is not resistant to concentrated sulfuric acid.

*Note: Pos. 12.5 is not sold as single Spare part component but only as part of a machine maintenance/repair order. For further information please contact Alfa Laval Customer Support.

**Note: Special Polymer/Titanium version available for e.g. WFI application - Item# TE20B364.

Continues next page ...

26	3	Screw, Stainless steel	TE51A189	Spare part
27	1	Metal cable gland, PG9, Brass, Nickel-pl.	TE51U310	Spare part
29	1	Screw, Stainless steel	TE51A057	Spare part
30	1	Motor flange welded A, Stainless steel	TE20B345	Spare part
31	1	Rotor outer complete, Stainless steel/steel	TE20B340	Spare part
32	1	Inlet housing 1" Tri-clamp, Stainless steel	TE20B351	Spare part
40	1	Air motor , assembly.	TE20B390	
41	1	Air tubing, PU, 230mm	TE51U305	Spare part
42	1	Swivel push-in elbow, Brass, Nickel-pl.	TE51U388	Spare part
43	1	Flow regulator f. banjo fitting, Brass, Nickel-pl.	TE51U008	Spare part
44	1	Banjo fitting, push-in , Brass, Nickel-pl.	TE51U384	Spare part
45	0	Air tubing, PU - Customer Supply	(TE51U305)	Spare part
46	4	Screw, Stainless steel	TE51A098	Spare part
47	1	Connector flange, Stainless steel	TE20B637	
48	2	Pointed screw , Stainless steel	TE51A018	Spare part
49	1	Gear box 1:100 f. Air motor, assembly.	TE20B636	
50	1	Guide ring, Stainless steel	TE20B633	Spare part
51	1	Bush f. Rotor Air motor, Stainless steel	TE20B631	Spare part
52	3	Nut, Stainless steel	TE51A504	Spare part
53	1	Flange for gear, Stainless steel	TE20B634	Spare part
54	4	Screw , Stainless steel	TE51A049	Spare part
55	1	Straight connector, push-in, Brass, Nickel-pl.	TE51U387	Spare part
56	2	Seal ring, Polymer - black	TE20B645	Spare part
57	1	Adapter f. Silencer, Stainless steel	TE20B644	Spare part
58	1	O-ring, Elastomer	TE51T041	Spare part
59	1	Silencer incl. in Air motor	(TE51U005)	Spare part

Please note that some of the polymer parts are in PEEK, which is not resistant to concentrated sulfuric acid.

*Note: Pos. 12.5 is not sold as single Spare part component but only as part of a machine maintenance/repair order. For further information please contact Alfa Laval Customer Support.

**Note: Special Polymer/Titanium version available for e.g. WFI application - Item# TE20B364.

Reference List of Parts
Toftejorg SaniJet 20, Air Driven, Hastelloy Version (FFKM as standard)

Pos		Qty	Denomination	Item no.	Remark
1		3	Screw , Stainless steel	TE51A146	Spare part
9		2	Gasket, Elastomer	TE20C516	Wear part
12	□	1	Base unit, L = 350 mm, assembly	TE20C309	
	□	1	Base unit, L = 500 mm, assembly	TE20C300	
	□	1	Base unit, L = 700 mm, assembly	TE20C301	
	□	1	Base unit, L = 1000 mm, assembly	TE20C302	
	□	1	Base unit, L = 1200 mm, assembly	TE20C303	
	□	1	Base unit, L = 1500 mm, assembly	TE20C304	
12.1		3	Screw, Stainless steel	TE51A172	Spare part
12.2		1	Bracket, Stainless steel	TE20B594	Spare part
12.3		1	Plug, Alloy	TE20C642	Spare part
12.4		1	O-ring, Elastomer	TE51T129	Wear part
12.5		1	Base housing, Alloy		*Note
12.6		1	Retaining screw, Stainless steel	TE20B512	Spare part
12.7		1	Plain seal, Elastomer	TE20C511	Wear part
12.8	□	1	Inner shaft, L = 350 mm, Alloy	TE20C538	Spare part
	□	1	Inner shaft, L = 500 mm, Alloy	TE20C532	Spare part
	□	1	Inner shaft, L = 700 mm, Alloy	TE20C533	Spare part
	□	1	Inner shaft, L = 1000 mm, Alloy	TE20C534	Spare part
	□	1	Inner shaft, L = 1200 mm, Alloy	TE20C535	Spare part
	□	1	Inner shaft, L = 1500 mm, Alloy	TE20C536	Spare part
12.9		1	Bearing ring, Polymer	TE20B510	Wear part
12.10	□	1	Outer tube, L = 350 mm, Alloy	TE20C310	Spare part
	□	1	Outer tube, L = 500 mm, Alloy	TE20C311	Spare part
	□	1	Outer tube, L = 700 mm, Alloy	TE20C312	Spare part
	□	1	Outer tube, L = 1000 mm, Alloy	TE20C313	Spare part
	□	1	Outer tube, L = 1200 mm, Alloy	TE20C314	Spare part
	□	1	Outer tube, L = 1500 mm, Alloy	TE20C315	Spare part
12.11		1	Ball race, Alloy	TE20C539	Wear part
12.12		1	Ball ring, Polymer/alloy	TE20C360	Wear part
12.13		1	Bevel gear, Alloy	TE20C542	Wear part
12.14		1	Bearing bush, Polymer	TE20B513	Spare part
12.15		1	Bearing bush, Polymer	TE20B514	Wear part
13		1	Seal ring H, Elastomer	TE20C553	Wear part
14	□	1	Cleaner unit, 2xø2.0mm, assembly	TE20C324	
	□	1	Cleaner unit, 2xø3.8mm, assembly	TE20C325	
	□	1	Cleaner unit, 4xø4.2mm, assembly	TE20C326	
14.1		1	Pin, Alloy	TE20C655	Spare part
14.2		1	Clip ring, Alloy	TE20C571	Spare part
14.3	□	1	Cleaner head 2xø2.0mm, Alloy	TE20C334	Spare part
	□	1	Cleaner head 2xø3.8mm, Alloy	TE20C335	Spare part
	□	1	Cleaner head 4xø4.2mm, Alloy	TE20C336	Spare part
14.4		1	Bearing bush, Polymer	TE20B554	Wear part
14.5		1	Retaining ring, Alloy	TE20C552	Wear part
14.6		1	Ball ring N, Polymer/Alloy	TE20C361	Wear part
14.7		1	Bevel gear, Alloy	TE20C550	Wear part
20		1	Motor cover, Stainless steel	TE20B347	Spare part
21		1	O-ring, Elastomer	TE51T125	Spare part
24		1	Tubular rivet, Stainless steel	TE51C052	Spare part
25		1	Rotor inner w. magnets, Steel	TE20B343	Spare part
26		3	Screw, Stainless steel	TE51A189	Spare part
27		1	Metal cable gland, PG9, Brass, Nickel-pl.	TE51U310	Spare part
29		1	Screw, Stainless steel	TE51A057	Spare part
30		1	Motor flange, Alloy	TE20C345	Spare part
31		1	Rotor outer,	TE20C340	Spare part
32		1	Inlet housing 1” Tri-clamp, Alloy	TE20C351	Spare part
40		1	Air motor , assembly	TE20B390	
41		1	Air tubing, PU, 230mm	TE51U305	Spare part
42		1	Swivel push-in elbow, Brass, Nickel-pl.	TE51U388	Spare part
43		1	Flow regulator f. banjo fitting, Brass, Nickel-pl.	TE51U008	Spare part
44		1	Banjo fitting, push-in , Brass, Nickel-pl.	TE51U384	Spare part
46		4	Screw, Stainless steel	TE51A098	Spare part
47		1	Connector flange, Stainless steel	TE20B637	Spare part
48		2	Pointed screw , Stainless steel	TE51A018	Spare part
49		1	Gear box 1:100 f. Air motor, assembly	TE20B636	
50		1	Guide ring, Stainless steel	TE20B633	Spare part
51		1	Bush f. Rotor Air motor, Stainless steel	TE20B631	Spare part

Continues next page ...

52	3	Nut, Stainless steel	TE51A504	Spare part
53	1	Flange for gear, Stainless steel	TE20B634	Spare part
54	4	Screw , Stainless steel	TE51A049	Spare part
55	1	Straight connector, push-in, Brass, Nickel-pl.	TE51U387	Spare part
56	2	Seal ring, Polymer - black	TE20B645	Spare part
57	1	Adapter f. Silencer, Stainless steel	TE20B644	Spare part
58	1	O-ring, Elastomer	TE51T041	Spare part
59	1	Silencer incl. in Air motor	(TE51U005)	Spare part

Please note that some of the polymer parts are in PEEK, which is not resistant to concentrated sulfuric acid.
*Note: Pos. 12.5 is not sold as single Spare part component but only as part of a machine maintenance/repair order. For further information please contact Alfa Laval Customer Support.

Service intervals

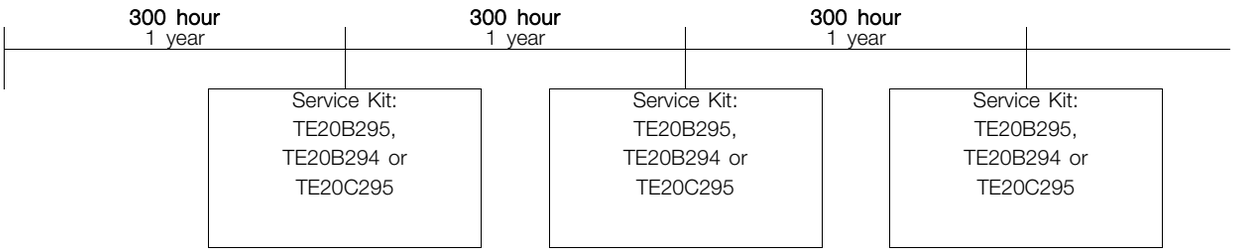

Pos	Qty	Denomination	Item no.
		Service Kit in EPDM for Toftejorg SaniJet 20 motor driven version (electrical/air)	TE20B295
Consisting of:			
12.9	1	Bearing ring, top	TE20B510
12.14	1	Bearing bush D1	TE20B513
12.15	1	Bearing bush D2	TE20B514
12.7	1	Plain seal S	TE20B511
9	2	Gasket D	TE20B516
13	1	Seal ring H	TE20B553
12.4	1	O-ring	TE51T127

Pos	Qty	Denomination	Item no.
		Service Kit in FPM (viton) for Toftejorg SaniJet 20 motor driven version (electrical/air)	TE20B294
Consisting of:			
12.9	1	Bearing ring, top	TE20B510
12.14	1	Bearing bush D1	TE20B513
12.15	1	Bearing bush D2	TE20B514
12.7	1	Plain seal S	TE20B51101
9	2	Gasket D	TE20B51601
13	1	Seal ring H	TE20B55301
12.4	1	O-ring	TE51T008

Pos	Qty	Denomination	Item no.
		Service Kit in Perlast for Toftejorg SaniJet 20 motor driven version (electrical/air)	TE20C295
Consisting of:			
12.9	1	Bearing ring, top	TE20B510
12.14	1	Bearing bush D1	TE20B513
12.15	1	Bearing bush D2	TE20B514
12.7	1	Plain seal S	TE20C511
9	2	Gasket D	TE20C516
13	1	Seal ring H	TE20C553
12.4	1	O-ring	TE51T129

Pos	Qty	Denomination	Item no.
Tools			
		Socket Wrench w. pin	TE462A
		Hook spanner	TE20B701

Exploded View Drawing, Toftejorg TJ20G

Before serial no. 0101 001 (e.g. 9302 024)

Pos	Qty	Denomination	Part no.
16.1	1	Stem	TE20G560
16.3	1	Liner	TE20G579
17.1	1	Hub	TE20G580
17.3	1	Liner	TE20G579

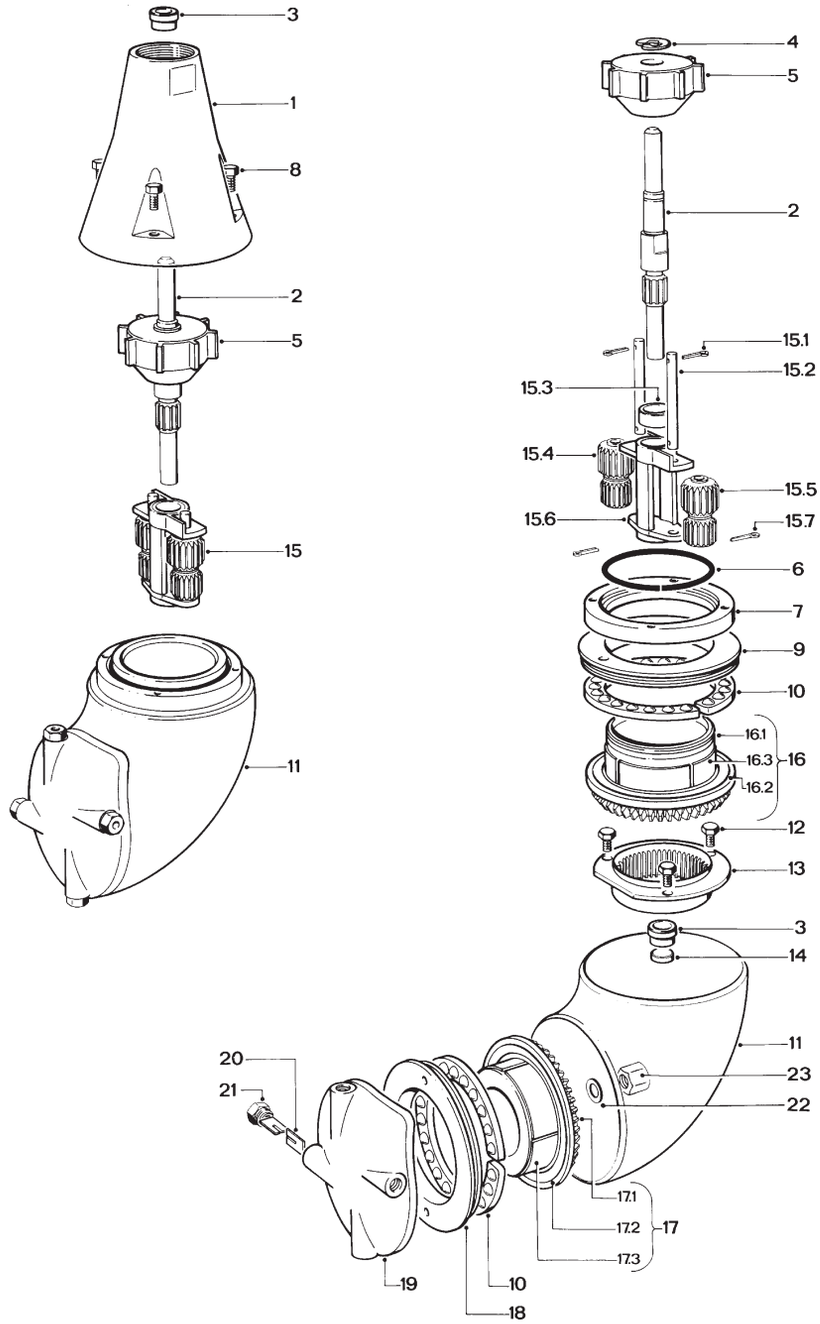

Service Kits for previous versions

Service Kit for Toftejorg TJ20G PTFE, serial no. below 0101 001, article no. TE20G285

Pos	Qty	Denomination	Part No.
3	1	Bearing for Turbine shaft	TE20G549
10	2	Ball retainer w. balls	TE20G318
14	1	Slide bearing	TE20G558
15.1	2	Cotter pin	TE51C102
15.3	1	Bearing for Planet Gear carr.	TE20G545
15.4	1	Planet wheel I	TE20G535
15.5	1	Planet wheel II	TE20G536
16.2	2	Ball race	TE20G574
17.3	2	Liner	TE20G579
22	1	Washer	TE20G584
24	1	Bearing for Turbine shaft top	TE20G548

Service Kit for Toftejorg TJ20G PEEK, serial no. between 0101 001 and 0603 099, article no. TE20G286

Pos	Qty	Denomination	Part No.
3	1	Bearing for Turbine shaft	TE20G549
9.1	2	Bushing	TE20G621
10	2	Ball retainer w. balls	TE20G318
14	1	Slide bearing	TE20G558
15.1	2	Cotter pin	TE51C102
15.3	1	Bearing for Planet Gear carrier	TE20G545
15.4	1	Planet wheel I	TE20G535
15.5	1	Planet wheel II	TE20G536
17.2	2	Ball race	TE20G574
22	1	Washer	TE20G584
24	1	Bearing for Turbine shaft top	TE20G548

Major Service Kit for Toftejorg TJ20G, serial no. between 0604 001 and 2013-20222, article no. TE20G288

Pos	Qty	Denomination	Part No.
3	1	Bearing for turbine shaft	TE20G549
9	1	Stem nut with ball race	TE20G571
10	2	Ball retainer w. balls	TE20G318
14	1	Slide bearing	TE20G558
15.1	1	Cotter pin	TE51C102
15.3	1	Bearing for Planet Gear carrier	TE20G545
15.4	1	Planet wheel I	TE20G535
15.5	1	Planet wheel II	TE20G536
15.7	1	Cotter pin	TE51C102
16.2	1	Ball race	TE20G574
17.2	1	Ball race	TE20G574
18	1	Hub nut with ball race	TE20G573
22	1	Washer with seal	TE20G584
24	1	Bearing for turbine shaft, top	TE20G548

Minor Service Kit for Toftejorg TJ20G, serial no. before 2013-20222, article no. TE20G299

Pos	Qty	Denomination	Item no.
3	1	Bearing for turbine shaft	TE20G549
14	1	Slide bearing	TE20G558
15.3	1	Bearing for Planet gear carrier	TE20G235
15.4	1	Planet wheel I	TE20G235
15.5	1	Planet wheel II	TE20G236
24	1	Bearing for turbine shaft, top	TE20G548

Service Kit for Toftejorg TJ20G Hastelloy, serial no. before 2013-20222, article no. TE20H28890

Pos	Qty	Denomination	Item no.
3	1	Bearing for turbine shaft	TE20G549
9	1	Stem nut with ball race	TE20H571
10	2	Ball retainer with balls	TE20H318
14	1	Slide bearing	TE20G558
15.3	1	Bearing for Planet gear carrier	TE20G245
15.4	1	Planet wheel I	TE20G235
15.5	1	Planet wheel II	TE20G236
16.2	1	Ball race	TE20H574
17.2	1	Ball race	TE20H574
18	1	Hub nut with ball race	TE20H573
22	1	Bearing for turbine shaft, top	TE20G548
-	2	Locking wire	TE20H542

1.5

TJ40G

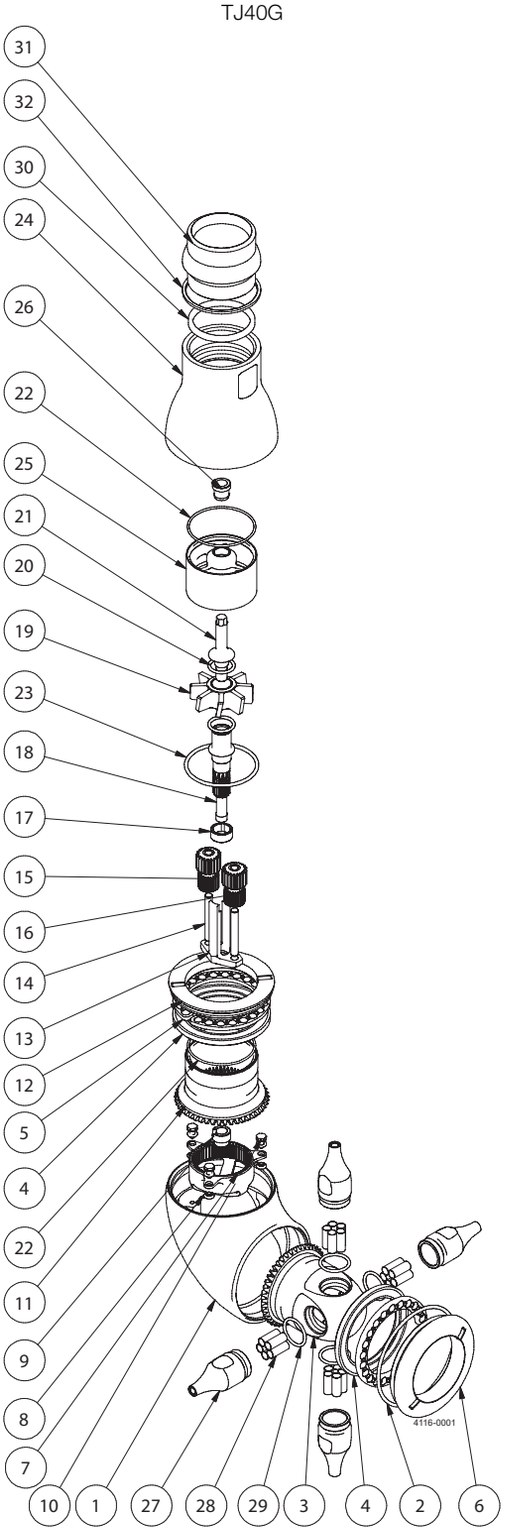
31
32
30
24
26
22
25
21
20
19
23
18
17
15
16
14
13
12
5
4
22
11
9
8
7
10
1
27
28
29
3
4
2
6
4116-0001

Pos		Qty	Denomination	Item no.	Material	Remark
TJ40G						
1		1	Body, [1]	9690000501	Stainless steel	*Note
2	✧●	1	O-ring	9690003801	Elastomer	Wear part
3		1	Hub	9690000801	Stainless steel	Spare part
4	●	2	Ball race	9690001101	Stainless steel	Wear part
5	●	2	Ball retainer w. balls	TE20G318	Polymer/SS	Wear part
6	●	1	Hub nut	9690000601	Stainless steel	Wear part
7		1	Gear ring	9690001601	Stainless steel	Spare part
8		6	Seal ring	TE20J509	Polymer	Wear part
9	✧●	1	Bearing f. body	9690003301	Polymer	Wear part
10		3	Screw f. body	TE20J550	Stainless steel	Spare part
11		1	Stem, [2]	9690001401	Stainless steel	Spare part
12	●	1	Stem nut	9690001201	Stainless steel	Wear part
13+14		1	Gear assembly TJ40G, complete	9690007201	Stainless steel	Spare part
13		1	Gear frame		Stainless steel	Spare part
14		2	Shaft f. planet gear		Stainless steel	Spare part
15	✧●	1	Planet wheel I	9690003601	Polymer	Wear part
16	✧●	1	Planet wheel II	9690003701	Polymer	Wear part
17	✧●	1	Bushing f. planet gear	9690003401	Polymer	Wear part
18		1	Impeller shaft	9690002501	Stainless steel	Spare part
19	□	1	Impeller, -1	9690002601	Polymer	Spare part
	□	1	Impeller, -2	9690002701	Polymer	Spare part
	□	1	Impeller, -3	9690002801	Polymer	Spare part
	□	1	Impeller, -4	9690003001	Polymer	Spare part
20		2	O-ring	TE51T135	Elastomer	Wear part
21		1	Shaft end	TE20J542	Stainless steel	Spare part
22	✧●	2	O-ring	9690005601	Elastomer	Wear part
23	✧●	1	O-ring	9690005701	Elastomer	Wear part
24		1	Cone	9690001501	Stainless steel	Spare part
25	□	1	Guide, - 1	9690004501	Polymer	Spare part
	□	1	Guide, - 2	9690004701	Polymer	Spare part
	□	1	Guide, - 3	9690004901	Polymer	Spare part
	□	1	Guide, - 4	9690005001	Polymer	Spare part
26	✧●	1	Bearing f. turbine top	TE20G548	Polymer	Wear part
27.1	□	4/2	Nozzle, [3]		Stainless steel	Spare part
	□	4/2	Nozzle, Burst, [3]		Stainless steel	Spare part
27.2	□	0/2	Blind cap, [4]	9690006901	Stainless steel	Spare part
28		20/10	Nozzle vane		Stainless steel	Spare part
29	✧●	4	O-ring	9690005501	Elastomer	Wear part
30		1	Gasket f. cone - inside	9690003201	Elastomer	Spare part
32		1	Gasket f. cone - outside	9690005201	Elastomer	Other prod.

[1] Position 1 is not sold as single spare part component. Only sold as part of a machine maintenance/repair order. For further information please contact Alfa Laval Customer Support.

[2] Stem updated to item number 8010005384 so please buy that stem. At first time buy for cleaning machine also buy item number TE51T169 O-ring. After that use spare part list for serial numbers from 2021-01270 for the machine.

[3] For nozzles as spare parts or refitting with burst nozzles, please choose from scheme underneath.

[4] Note position 27.2: For blinding holes on 2 nozzle versions.

Please note that some of the polymer parts are in PEEK, which is not resistant to concentrated sulfuric acid.

Scheme, nozzles complete				
Item no.	Denomination		Item no.	Denomination
9690007101	Nozzle ø6.0 f. TJ40G complete		9690007115	Nozzle, Burst, ø6.0 f. TJ40G complete
9690007102	Nozzle ø6.6 f. TJ40G complete		9690007116	Nozzle, Burst, ø6.6 f. TJ40G complete
9690007103	Nozzle ø7.3 f. TJ40G complete		9690007117	Nozzle, Burst, ø7.3 f. TJ40G complete
9690007104	Nozzle ø8.1 f. TJ40G complete		9690007118	Nozzle, Burst, ø8.1 f. TJ40G complete
9690007105	Nozzle ø9.0 f. TJ40G complete		9690007119	Nozzle, Burst, ø9.0 f. TJ40G complete
9690007106	Nozzle ø10.0 f. TJ40G complete		9690007120	Nozzle, Burst, ø10.0 f. TJ40G complete
9690007107	Nozzle ø11.2 f. TJ40G complete		9690007121	Nozzle, Burst, ø11.2 f. TJ40G complete

1.5

TJ40G

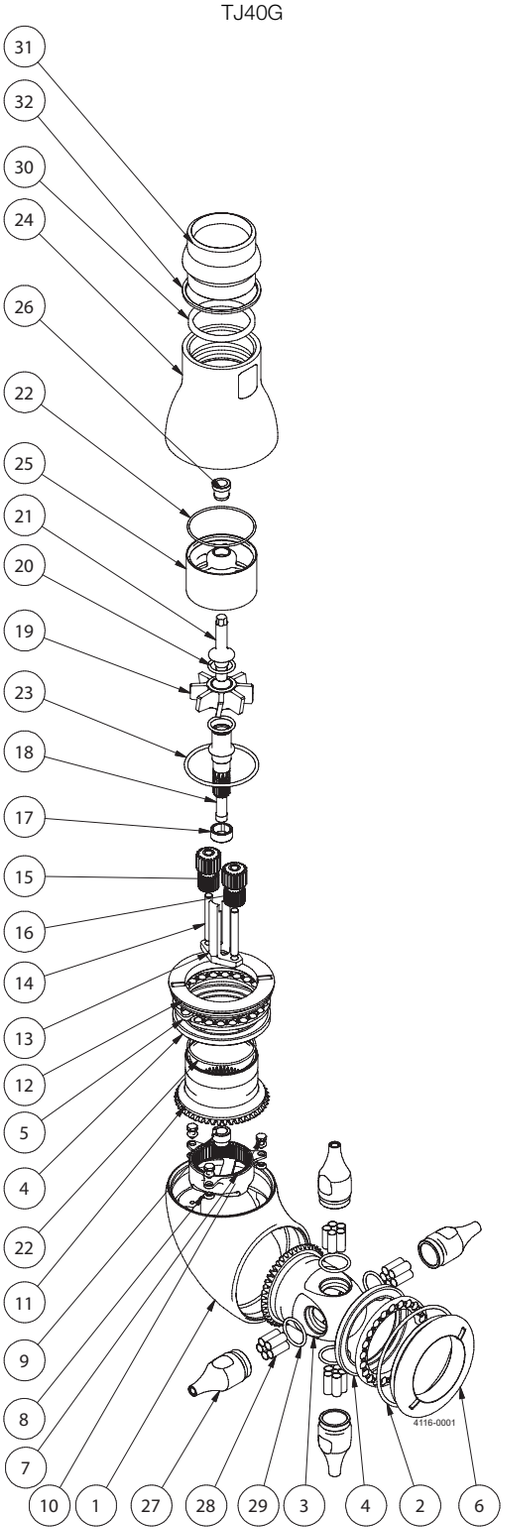
31
32
30
24
26
22
25
21
20
19
23
18
17
15
16
14
13
12
5
4
22
11
9
8
7
10
1
27
28
29
3
4
2
6
4116-0001

Item no.

Service kits - previous versions. Serial numbers up to 2021-01137

Minor service kit TJ40G	9690003101
Minor service kit TJ40G - Q-Doc	9690003102
Major service kit TJ40G	9690006201
Major service kit TJ40G - Q-Doc	9690006202

❑ Configuration according to delivery note/order.
Parts marked with ✧ are included in the Minor Service Kit for TJ40G: 96900031XX
Parts marked with ● are included in the Major Service Kit for TJ40G: 96900062XX
The machine can be delivered with ATEX/IECEx certification.

1.5

TJ40G-HD

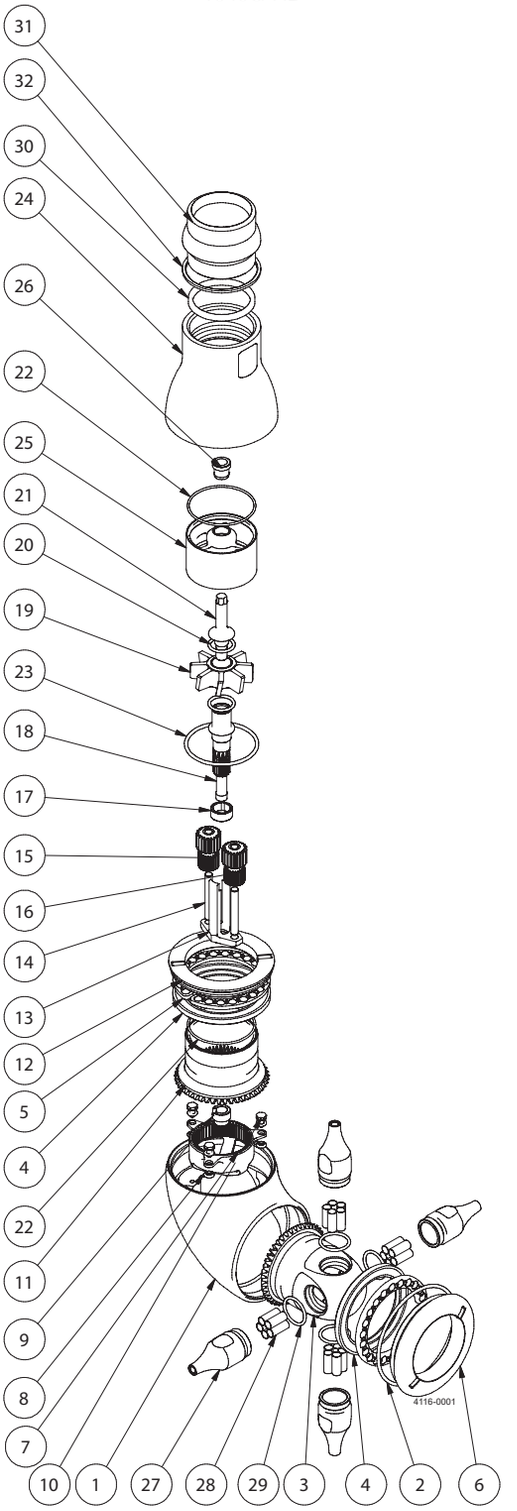
31
32
30
24
26
22
25
21
20
19
23
18
17
15
16
14
13
12
5
4
22
11
9
8
7
10
1
27
28
29
3
4
2
6
4116-0001

Pos		Qty	Denomination	Item no.	Material	Remark
TJ40G-HD						
1		1	Body, [1]	9690000501	Stainless steel	*Note
2	✧●	1	O-ring	9690003801	Elastomer	Wear part
3		1	Hub	9690000801	Stainless steel	Spare part
4	●	2	Ball race	9690001101	Stainless steel	Wear part
5	●	2	Ball retainer w. balls	TE20G318	Polymer/SS	Wear part
6	●	1	Hub nut - HD	9690000701	Stainless steel	Wear part
7		1	Gear ring	9690001601	Stainless steel	Spare part
8		6	Seal ring	TE20J509	Polymer	Wear part
9	✧●	1	Bearing f. body	9690003301	Polymer	Wear part
10		3	Screw f. body	TE20J550	Stainless steel	Spare part
11		1	Stem, [2]	9690001401	Stainless steel	Spare part
12	●	1	Stem nut - HD	9690001301	Stainless steel	Wear part
13+14		1	Gear assembly TJ40G, complete	9690007201	Stainless steel	Spare part
13		1	Gear frame		Stainless steel	Spare part
14		2	Shaft f. planet gear		Stainless steel	Spare part
15	✧●	1	Planet wheel I	9690003601	Polymer	Wear part
16	✧●	1	Planet wheel II	9690003701	Polymer	Wear part
17	✧●	1	Bushing f. planet gear	9690003401	Polymer	Wear part
18		1	Impeller shaft	9690002501	Stainless steel	Spare part
19	□	1	Impeller, - 1	9690002601	Polymer	Spare part
	□	1	Impeller, - 2	9690002701	Polymer	Spare part
	□	1	Impeller, - 3	9690002801	Polymer	Spare part
	□	1	Impeller, - 4	9690003001	Polymer	Spare part
20		2	O-ring	TE51T135	Elastomer	Wear part
21		1	Shaft end	TE20J542	Stainless steel	Spare part
22	✧●	2	O-ring	9690005601	Elastomer	Wear part
23	✧●	1	O-ring	9690005701	Elastomer	Wear part
24		1	Cone	9690001501	Stainless steel	Spare part
25	□	1	Guide, - 1	9690004501	Polymer	Spare part
	□	1	Guide, - 2	9690004701	Polymer	Spare part
	□	1	Guide, - 3	9690004901	Polymer	Spare part
	□	1	Guide, - 4	9690005001	Polymer	Spare part
26	✧●	1	Bearing f. turbine top	TE20G548	Polymer	Wear part
27.1	□	4/2	Nozzle, [3]		Stainless steel	Spare part
	□	4/2	Nozzle, Burst, [3]		Stainless steel	Spare part
27.2	□	0/2	Blind cap, [4]	9690006901	Stainless steel	Spare part
28		20/10	Nozzle vane		Stainless steel	Spare part
29	✧●	4	O-ring	9690005501	Elastomer	Wear part
30		1	Gasket f. cone - inside	9690003201	Elastomer	Spare part
32		1	Gasket f. cone - outside	9690005201	Elastomer	Other prod.

[1] Position 1 is not sold as single spare part component. Only sold as part of a machine maintenance/repair order. For further information please contact Alfa Laval Customer Support.

[2] Stem updated to item number 8010005384 so please buy that stem. At first time buy for cleaning machine also buy item number TE51T169 O-ring. After that use spare part list for serial numbers from 2021-01270 for the machine.

[3] For nozzles as spare parts or refitting with burst nozzles, please choose from scheme underneath.

[4] Note position 27.2: For blinding holes on 2 nozzle versions.

Please note that some of the polymer parts are in PEEK, which is not resistant to concentrated sulfuric acid.

Scheme, nozzles complete				
Item no.	Denomination		Item no.	Denomination
9690007101	Nozzle ø6.0 f. TJ40G complete		9690007115	Nozzle, Burst, ø6.0 f. TJ40G complete
9690007102	Nozzle ø6.6 f. TJ40G complete		9690007116	Nozzle, Burst, ø6.6 f. TJ40G complete
9690007103	Nozzle ø7.3 f. TJ40G complete		9690007117	Nozzle, Burst, ø7.3 f. TJ40G complete
9690007104	Nozzle ø8.1 f. TJ40G complete		9690007118	Nozzle, Burst, ø8.1 f. TJ40G complete
9690007105	Nozzle ø9.0 f. TJ40G complete		9690007119	Nozzle, Burst, ø9.0 f. TJ40G complete
9690007106	Nozzle ø10.0 f. TJ40G complete		9690007120	Nozzle, Burst, ø10.0 f. TJ40G complete
9690007107	Nozzle ø11.2 f. TJ40G complete		9690007121	Nozzle, Burst, ø11.2 f. TJ40G complete

1.5

TJ40G

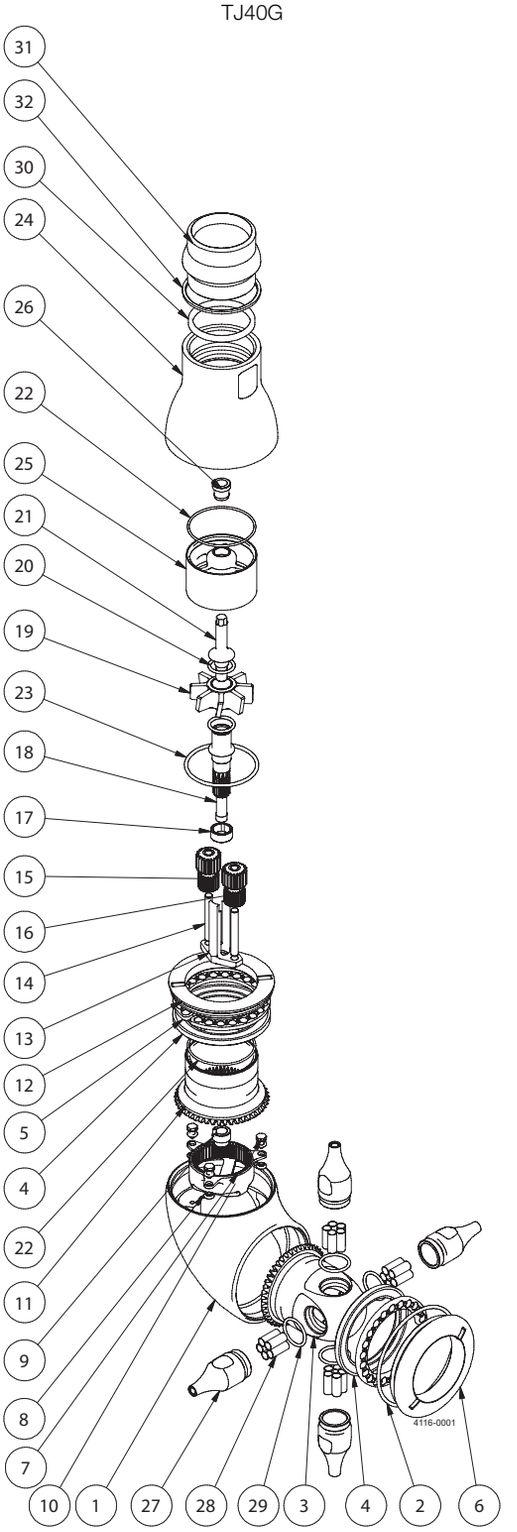
31
32
30
24
26
22
25
21
20
19
23
18
17
15
16
14
13
12
5
4
22
11
9
8
7
10
1
27
28
29
3
4
2
6
4116-0001

Item no.

Service kits - previous versions. Serial numbers up to 2021-01137

Minor service kit TJ40G-HD	9690003101
Minor service kit TJ40G-HD - Q-Doc	9690003102
Major service kit TJ40G-HD	9690006501
Major service kit TJ40G-HD - Q-Doc	9690006502

❑ Configuration according to delivery note/order.
Parts marked with ✧ are included in the Minor Service Kit for TJ40G-HD: 96900031XX
Parts marked with ● are included in the Major Service Kit for TJ40G-HD: 96900065XX
The machine can be delivered with ATEX/IECEx certification.

1.5

Service intervals

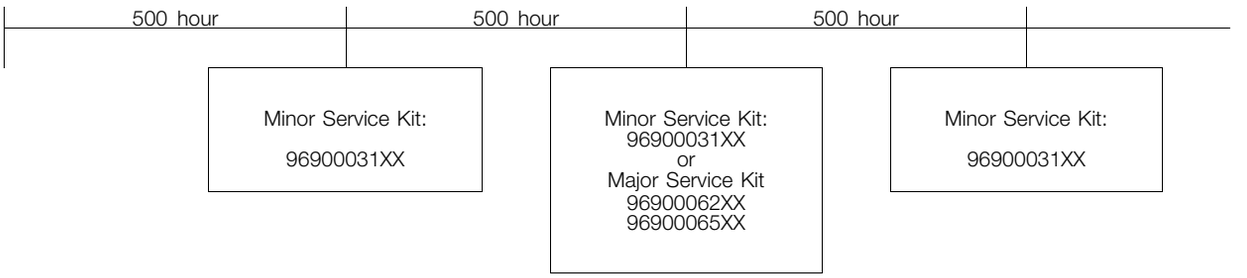

The service intervals are recommended on the basis of pure liquids. When liquids contain particles and other kind of abrasives, we recommend shorter service intervals depending on the actual running conditions.

Pos	Qty	Denomination	TJ40G Item no. 9690003101	TJ40G Q-doc Item no. 9690003102	TJ40G-HD Item no. 9690003101	TJ40G-HD Q-doc Item no. 9690003102
Minor service kits previous versions. Serial numbers below XXXXXXXX						
	1	TJ40G Bearing f. body	9690003301	9690003301	9690003301	9690003301
	1	TJ40G Bushing f. Planet gear	9690003401	9690003401	9690003401	9690003401
	1	TJ40G Gear wheel I	9690003601	9690003601	9690003601	9690003601
	1	TJ40G Gear wheel II	9690003701	9690003701	9690003701	9690003701
	1	O-ring	9690003801	9690003801	9690003801	9690003801
	4	O-ring	9690005501	9690005501	9690005501	9690005501
	2	O-ring	9690005601	9690005601	9690005601	9690005601
	1	O-ring	9690005701	9690005701	9690005701	9690005701
	1	Bearing for turbine shaft, top	TE20G548	TE20G548	TE20G548	TE20G548

Pos	Qty	Denomination	TJ40G Item no. 9690006201	TJ40G Q-doc Item no. 9690006202	TJ40G HD Item no. 9690006501	TJ40G HD Q-doc Item no. 9690006502
Major service kits previous versions. Serial numbers below XXXXXXXX						
	1	TJ40G Hub nut	9690000601	9690000601	9690000701	9690000701
	2	TJ40G Ball race	9690001101	9690001101	9690001101	9690001101
	1	TJ40G Stem nut	9690001201	9690001201	9690001301	9690001301
	1	TJ40G Bearing f. body	9690003301	9690003301	9690003301	9690003301
	1	TJ40G Bushing f. Planet gear	9690003401	9690003401	9690003401	9690003401
	1	TJ40G Gear wheel I	9690003601	9690003601	9690003601	9690003601
	1	TJ40G Gear wheel II	9690003701	9690003701	9690003701	9690003701
	1	O-ring	9690003801	9690003801	9690003801	9690003801
	4	O-ring	9690005501	9690005501	9690005501	9690005501
	2	O-ring	9690005601	9690005601	9690005601	9690005601
	1	O-ring	9690005701	9690005701	9690005701	9690005701
	2	Ball retainer w. balls	TE20G318	TE20G318	TE20G318	TE20G318
	1	Bearing for turbine shaft, top	TE20G548	TE20G548	TE20G548	TE20G548

1.5

Tools

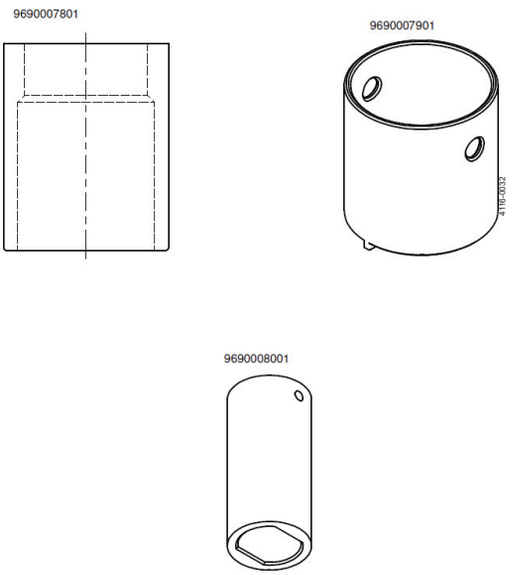

Pos	Qty	Denomination	Item no.
Tool kit			
		Alfa Laval TJ40G Tool kit	TE81B149
Consisting of:			
	1	Fixture f. Impeller	TE20J591
	1	5 mm calipers	TE369
	1	Ring fork key NV24	TE81B140
	1	NV8 socket long	TE81B157
	1	Torque wrench 1/4" 5 - 25 Nm	TE81B156
	1	Drift punch ø8	TE81B148
	1	Ring fork key NV65	TE81B147

Pos	Qty	Denomination	Item no.
Other tools f. TJ40G			
		Ball race tool f. TJ40G	9690007801
		Nut tool	9690007901
		Socket f. TJ40G nozzles	9690008001

Not manufactured anymore

1.5

Top assembly

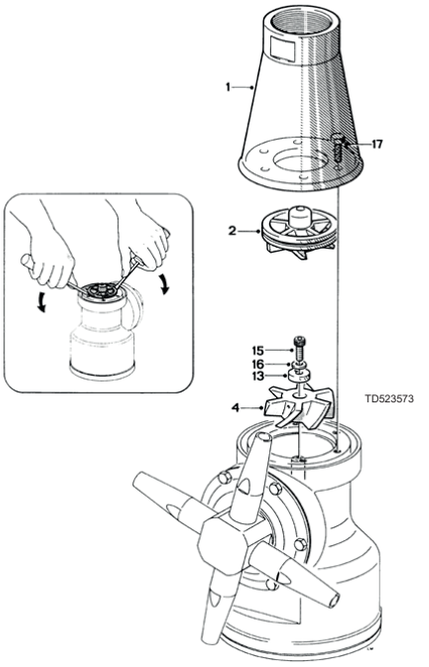

Bottom assembly

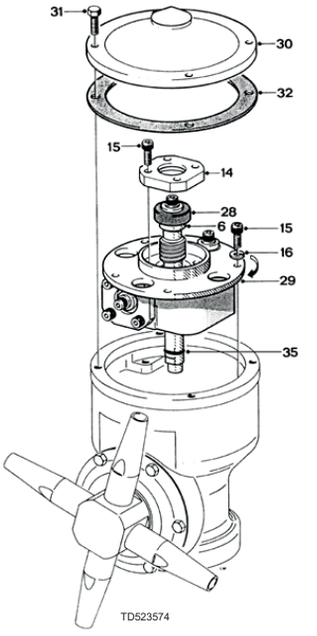

Hub assembly

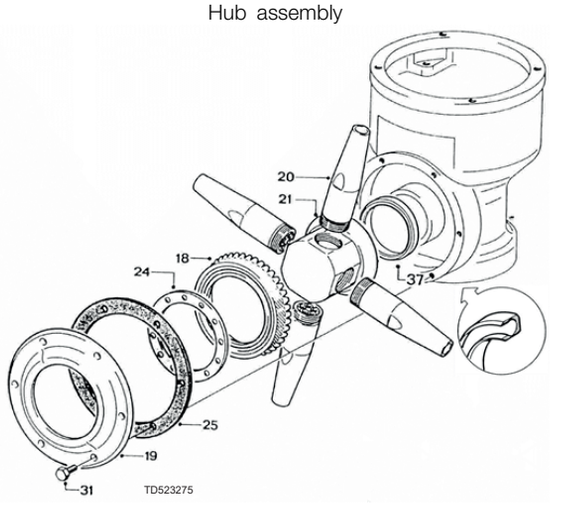

Stem assembly

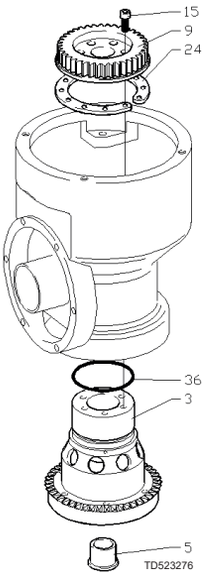

Gear assembly

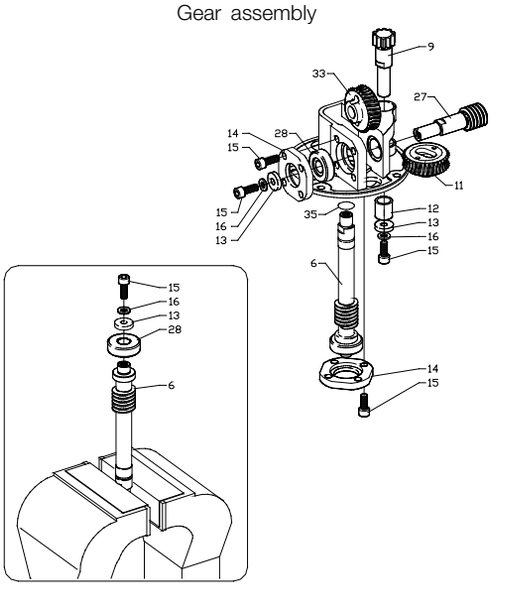

Pos	Qty	Denomination	Item no.	Material	Remark
1 □	1	Top Cone 1½" BSP	TE21D502	Stainless steel	Spare part
□	1	Top Cone 1½" NPT	TE21D503	Stainless steel	Spare part
2 □	1	Guide 100%	TE703	Stainless steel	Spare part
□	1	Guide ring 0%	TE8030	Stainless steel	Spare part
3	1	Stem	TE21D557	Stainless steel	Spare part
4	1	Impeller 100%	TE705	Stainless steel	Spare part
5	1	Main bush	TE21A525	Hard-wearing plastic	Wear part
6	1	Turbine shaft	TE21F503	Stainless steel	Wear part
7	1	Gear wheel w. ball race	TE71213	Stainless steel	Spare part
7.1	1	Ball race	TE8261	Stainless steel	Wear part
9	1	Pinion	TE814	Stainless steel	Spare part
10	3	Collar bush	TE21A585	Hard-wearing plastic	Wear part
11	1	Worm wheel w. reinforcem.	TE21A367	Hard-wearing plastic	Wear part
12	1	Journal	TE817	Stainless steel	Spare part
13	4	Washer	TE719A	Stainless steel	Spare part
14	2	Bearing cover	TE731	Stainless steel	Spare part
15	22	Screw	TE118	Stainless steel	Spare part
16	8	Spring washer	TE156	Stainless steel	Spare part
17	6	Screw	TE402H	Stainless steel	Spare part
18	1	Bevel gear w. ball race	TE722S	Stainless steel	Spare part
18.1	1	Ball race	TE8261	Stainless steel	Wear part
19	1	Hub cover w. ball race	TE21D343	Stainless steel	Spare part
19.1	1	Ball race	TE8261	Stainless steel	Wear part
20 □	4	Nozzle ø6 mm	TE50A006	Stainless steel	Spare part
□	4	Nozzle ø7 mm	TE50A007	Stainless steel	Spare part
□	4	Nozzle ø8 mm	TE50A008	Stainless steel	Spare part
21	1	Hub	TE21C536	Stainless steel	Spare part
24	2	Ball retainer w. balls	TE21A380	Plastic matr./stainless steel	Wear part
25	1	Hub gasket	TE21D562	Teflon TFM	Spare part
26	1	Body		Stainless steel	*Note
26.1	1	Main collar upper	TE21D558	Plastic matr.	Wear part
26.2	1	Main collar lower	TE21B521	Plastic matr.	Wear part
26.3	1	Ball race	TE8261	Stainless steel	Wear part
27	1	Horizontal shaft	TE828Z	Stainless steel	Wear part
28	2	Slide bearing	TE21A570	Plastic matr.	Wear part
29	1	Gear frame	TE730	Stainless steel	Spare part
30	1	Bottom cover, compl., [1)]	TE21D351	Stainless steel	Spare part
31	10	Screw	TE421H	Stainless steel	Spare part
32	1	Bottom gasket	TE21D563	Teflon TFM	Spare part
33	1	Worm wheel w. reinforcem.	TE21A367	Hard-wearing plastic	Wear part
34	1	O-ring	TE807	FPM	Wear part
35	1	O-ring	TE810	FPM	Wear part
36	1	O-ring	TE825	FPM	Wear part
37	1	Lip seal	TE21B549	Plastic matr.	Wear part

*Note: Pos. 26 is not sold as single Spare part component but only as part of a machine maintenance/repair order.
For further information please contact Alfa Laval Customer Support.

NOTE[1)]
The MultiJet 40 version can be identified by the bottom cover (pos. 30):
Present version: Bottom cover without spray disc
Previous version: Bottom cover with spray disc (depicted to the right)

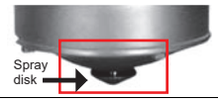

Not manufactured anymore

1.5

Top assembly

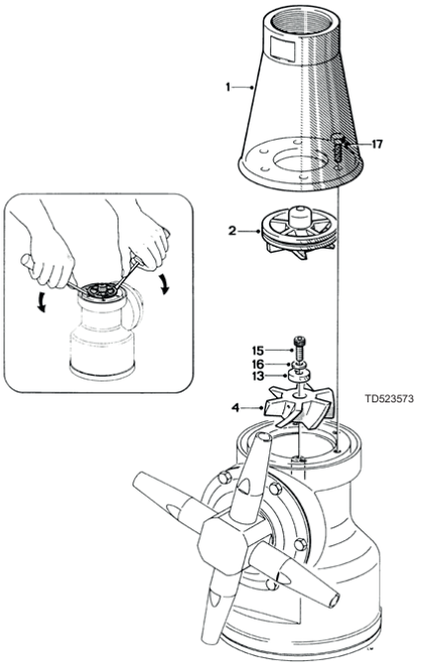

Bottom assembly

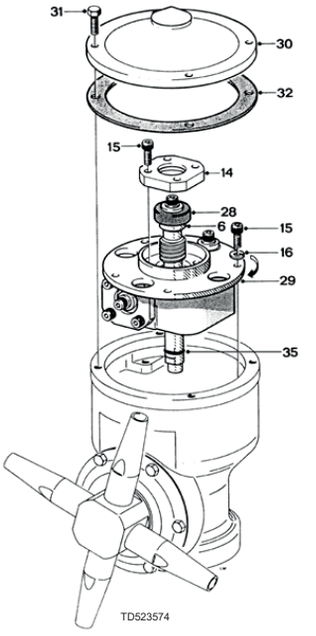

Hub assembly

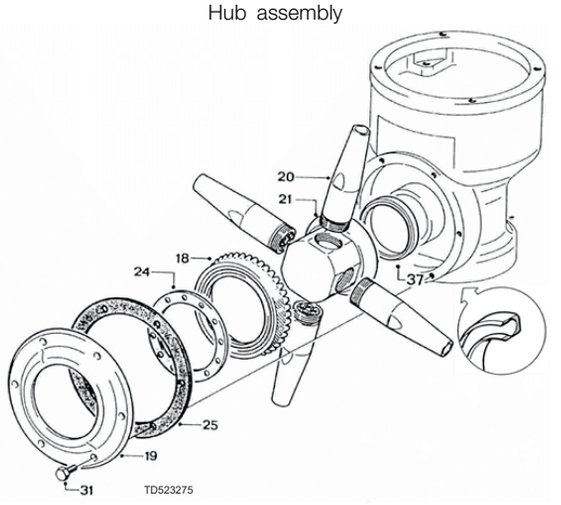

Stem assembly

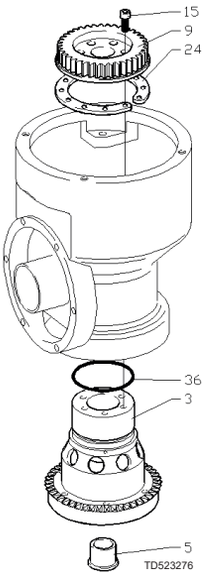

Gear assembly

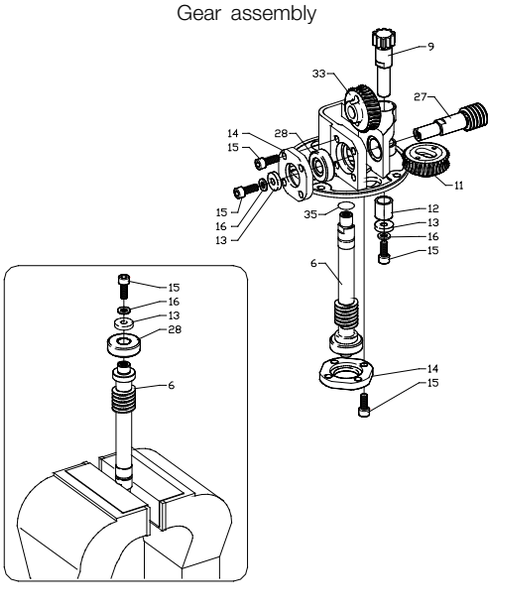

Pos	Qty	Denomination	Item no.
		Service kit	TE21D297
Consisting of:			
5	1	Main bush, PEEK	TE21A525
10	3	Collar bush, PEEK	TE21A585
11	1	Worm wheel, PEEK	TE21A367
28	2	Slide bearing, PEEK	TE21A570
33	1	Worm wheel, PEEK	TE21A367
34	1	O-ring	TE807
35	1	O-ring	TE810
36	1	O-ring	TE825
37	1	Lip Seal	TE21B549

1.5

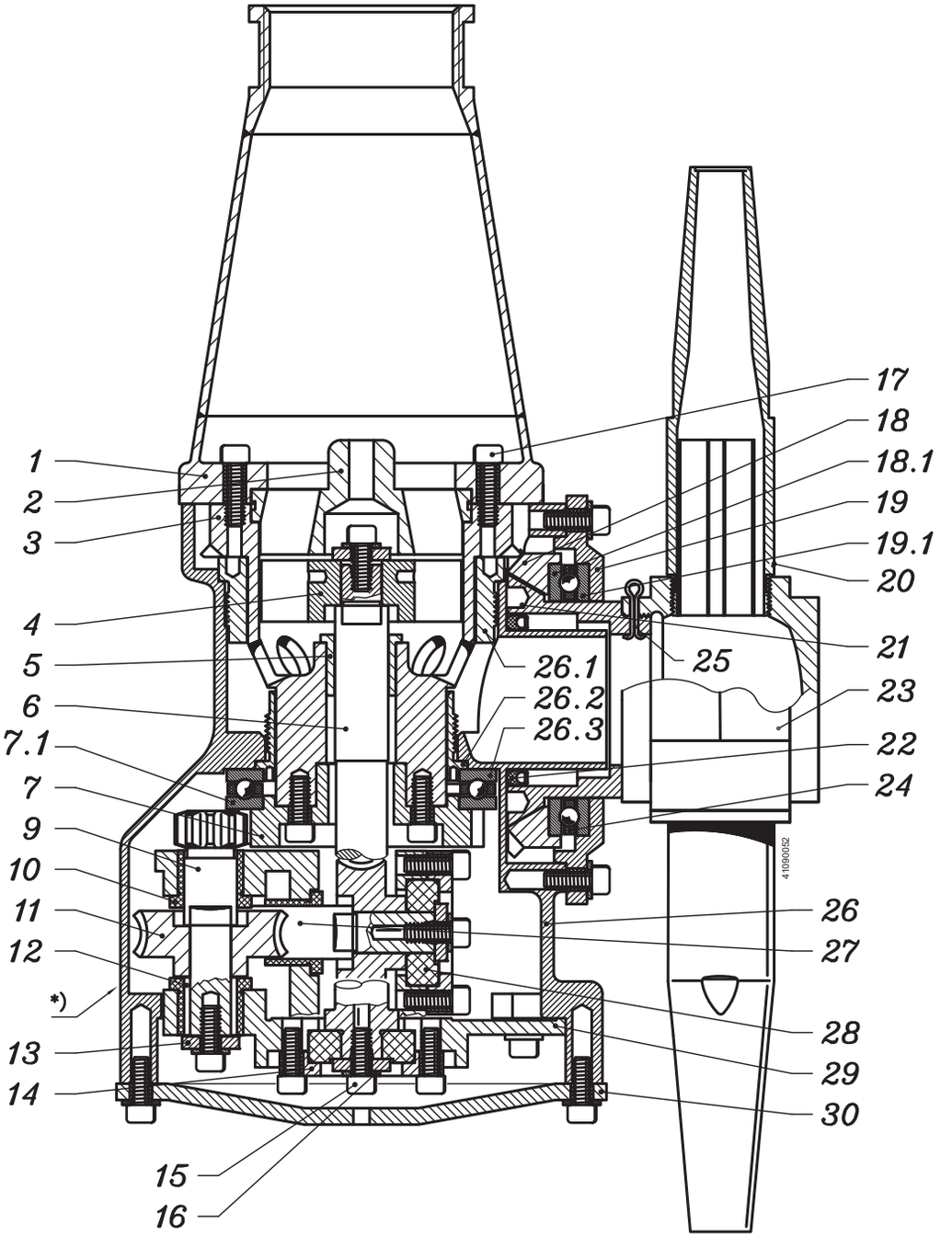
1
2
3
4
5
6
7.1
7
9
10
11
12
*)
13
14
15
16
17
18
18.1
19
19.1
20
21
25
26.1
26.2
26.3
23
22
24
26
27
28
29
30
41090052

Pos		Qty	Denomination	Item no.	Material	Remark
1	□	1	Top Cone, 1½" BSP	TE21D502	Stainless steel	Spare part
	□	1	Top Cone , 1½" NPT	TE21D503	Stainless steel	Spare part
2	□	1	Guide ring, 100%	TE703	Stainless steel	Spare part
	□	1	Guide ring, 50%	TE70350	Stainless steel	Spare part
	□	1	Guide ring, 0%	TE8030	Stainless steel	Spare part
3		1	Stem	TE21B526	Stainless steel/polymer	Spare part
4	□	1	Impeller , 100%	TE705	Stainless steel	Spare part
	□	1	Impeller, 50%	TE70550	Stainless steel	Spare part
5	◆○	1	Main bush	TE21A525	Polymer	Wear part
6	○	1	Turbine shaft	TE411K	Stainless steel	Wear part
7		1	Gear wheel w. ball race	TE71213	Stainless steel	Spare part
7.1	○	1	Ball race	TE8261	Stainless steel	Wear part
9		1	Pinion	TE814	Stainless steel	Spare part
10	◆○	3	Collar bush	TE21A585	Polymer	Wear part
11	◆○	1	Worm wheel w. reinforcem.	TE21A367	Polymer	Wear part
12		1	Journal	TE817	Stainless steel	Spare part
13		4	Washer	TE719A	Stainless steel	Spare part
14		2	Bearing cover	TE731	Stainless steel	Spare part
15		32	Screw	TE118	Stainless steel	Spare part
16		18	Spring washer	TE156	Stainless steel	Spare part
17		6	Screw	TE402H	Stainless steel	Spare part
18		1	Bevel gear w. ball race	TE722S	Stainless steel	Spare part
18.1	○	1	Ball race	TE8261	Stainless steel	Wear part
19		1	Hub cover w. ball race	TE21M502	Stainless steel	Spare part
19.1	○	1	Ball race	TE8261	Stainless steel	Wear part
20	□	2	Nozzle, ø7 mm	TE50A007	Stainless steel	Spare part
	□	2	Nozzle, ø8 mm	TE50A008	Stainless steel	Spare part
	□	2	Nozzle, ø9 mm	TE50A009	Stainless steel	Spare part
	□	2	Nozzle, ø10 mm	TE50A010	Stainless steel	Spare part
21		1	Hub conical part	TE21B536	Stainless steel	Spare part
22	◆○	1	Lip seal	TE21B549	Polymer	Wear part
23		1	Hub nozle part	TE21B536	Stainless steel	Wear part
24	○	2	Ball retainer w. balls	TE21A380	Polymer/Stainless steel	Wear part
25	○	1	Cotter pin	TE448	Stainless steel	Wear part
26		1	Body		Stainless steel	*Note
26.1	○	1	Main collar upper	TE21B520	Polymer	Wear part
26.2	○	1	Main collar lower	TE21B521	Polymer	Wear part
26.3	○	1	Ball race	TE8261	Stainless steel	Wear part
27	○	1	Horizontal shaft	TE828Z	Stainless steel	Wear part
28	◆○	2	Slide bearing	TE21A570	Polymer	Wear part
29		1	Gear frame	TE730	Stainless steel	Spare part
30		1	Bottom cover, compl., [1]	TE21M501	Stainless steel	Spare part
33	◆○	1	Worm wheel w. reinforcem.	TE21A367	Polymer	Wear part

Spare part kit

◆	**Minor service kit**	**TE55H000**
○	**Major service kit**	**TE55H010**

□ Configuration according to delivery note/order.

Parts marked with ◆ are included in the Minor service kit TE55H000
Parts marked with ○ are included in the Major service kit TE55H010

The machine can be delivered with ATEX/IECEx certification.

NOTE[1]
The MultiJet 40 version can be identified by the bottom cover (pos. 30):
Present version: Bottom cover without spray disc
Previous version: Bottom cover with spray disc (depicted to the right)

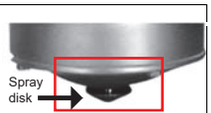

1.5

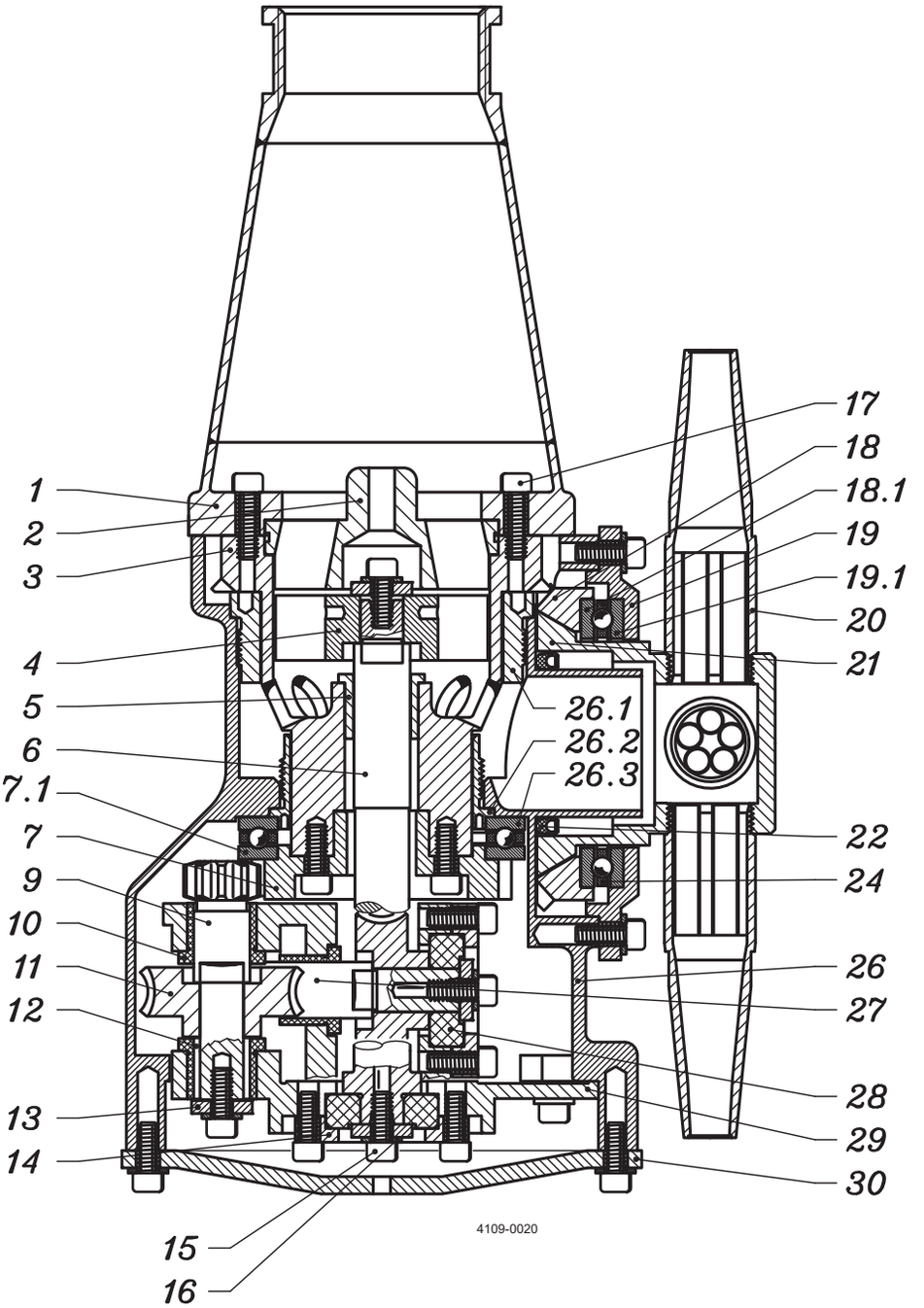
1
2
3
4
5
6
7.1
7
9
10
11
12
13
14
15
16
17
18
18.1
19
19.1
20
21
26.1
26.2
26.3
22
24
26
27
28
29
30
4109-0020

Pos		Qty	Denomination	Item no.	Material	Remark
1	□	1	Top Cone, 1½" BSP	TE21D502	Stainless steel	Spare part
	□	1	Top Cone , 1½" NPT	TE21D503	Stainless steel	Spare part
2	□	1	Guide , 100%	TE703	Stainless steel	Spare part
	□	1	Guide ring, 0%	TE8030	Stainless steel	Spare part
3		1	Stem	TE21B526	Stainless steel/polymer	Spare part
4		1	Impeller , 100%	TE705	Stainless steel	Spare part
5	♦○	1	Main bush	TE21A525	Polymer	Wear part
6	○	1	Turbine shaft	TE411K	Stainless steel	Wear part
7		1	Gear wheel w. ball race	TE71213	Stainless steel	Spare part
7.1	○	1	Ball race	TE8261	Stainless steel	Wear part
9		1	Pinion	TE814	Stainless steel	Spare part
10	♦○	3	Collar bush	TE21A585	Polymer	Wear part
11	♦○	1	Worm wheel w. reinforcem.	TE21A367	Polymer	Wear part
12		1	Journal	TE817	Stainless steel	Spare part
13		4	Washer	TE719A	Stainless steel	Spare part
14		2	Bearing cover	TE731	Stainless steel	Spare part
15		32	Screw	TE118	Stainless steel	Spare part
16		18	Spring washer	TE156	Stainless steel	Spare part
17		6	Screw	TE402H	Stainless steel	Spare part
18		1	Bevel gear w. ball race	TE722S	Stainless steel	Spare part
18.1	○	1	Ball race	TE8261	Stainless steel	Wear part
19		1	Hub cover w. ball race	TE21M502	Stainless steel	Spare part
19.1	○	1	Ball race	TE8261	Stainless steel	Wear part
20	□	4	Nozzle, ø6 mm	TE50A006	Stainless steel	Spare part
	□	4	Nozzle, ø7 mm	TE50A007	Stainless steel	Spare part
	□	4	Nozzle, ø8 mm	TE50A008	Stainless steel	Spare part
21		1	Hub	TE21C536	Stainless steel	Spare part
22	♦○	1	Lip seal	TE21B549	Polymer	Wear part
24	○	2	Ball retainer w. balls	TE21A380	Polymer/stainless steel	Wear part
26		1	Body		Stainless steel	*Note
26.1	○	1	Main collar upper	TE21B520	Polymer	Wear part
26.2	○	1	Main collar lower	TE21B521	Polymer	Wear part
26.3	○	1	Ball race	TE8261	Stainless steel	Wear part
27	○	1	Horizontal shaft	TE828Z	Stainless steel	Wear part
28	♦○	2	Slide bearing	TE21A570	Polymer	Wear part
29		1	Gear frame	TE730	Stainless steel	Spare part
30		1	Bottom cover, compl., [1]	TE21M501	Stainless steel	Spare part
33	♦○	1	Worm wheel w. reinforcem.	TE21A367	Polymer	Wear part

Spare part kit

♦	**Minor service kit**	**TE55H000**
○	**Major service kit**	**TE55H010**

□ Configuration according to delivery note/order.

Parts marked with ♦ are included in the Minor service kit TE55H000
Parts marked with ○ are included in the Major service kit TE55H010

The machine can be delivered with ATEX/IECEx certification.

NOTE[1)]
The MultiJet 40 version can be identified by the bottom cover (pos. 30):
Present version: Bottom cover without spray disc
Previous version: Bottom cover with spray disc (depicted to the right)

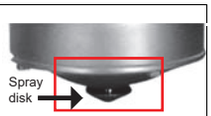

1.5

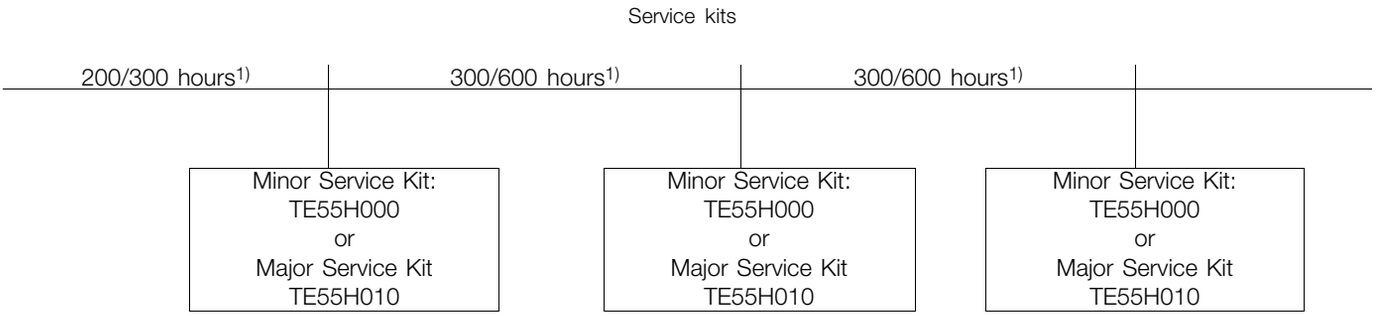

1) The service intervals depend on the application and use of the tank cleaning machines. In applications/processes using cleaning water with few particles, the recommendation for service intervals can be set to 600 hours. However, we recommend the first service check/interval after 300 hours. In applications/processes with particles, Alfa Laval recommend service intervals after 300 hours. In applications/processes with heavy particles, Alfa Laval recommend the first service interval after 200 hours.

Pos	Qty	Denomination	Item no.
Minor service kit			
		Minor service kit	TE55H000
Consisting of:			
	1	Main bush PEEK	TE21A525
	3	Collar bush PEEK	TE21A585
	1	Worm wheel w. steel core. PEEK	TE21A367
	1	Worm wheel w. steel core. PEEK	TE21A367
	1	Lip seal	TE21B549
	2	Slide bearing PEEK	TE21A570
	3	Locking Wire, *)	TE651

*) Locking wire not used for MultiJet 40

Pos	Qty	Denomination	Item no.
Major service kit			
		Major service kit	TE55H010
Consisting of:			
	1	Service Kit Minor	TE55H000
	1	Turbine Shaft	TE411K
	1	Ball Race	TE826-1
	1	Ball Race	TE826-1
	1	Ball Race	TE826-1
	1	Ball Race	TE826-1
	2	Ball retainer with balls	TE21A380
	1	Split pin, **)	TE448
	1	Main collar upper	TE21B520
	1	Main collar lower	TE21B521
	1	Horizontal Shaft	TE828Z

**) Only used with 2 nozzle hub

1.5

Sketch of tools for replacement of Collars bush:

TE81B033: Pusher for Collar bush

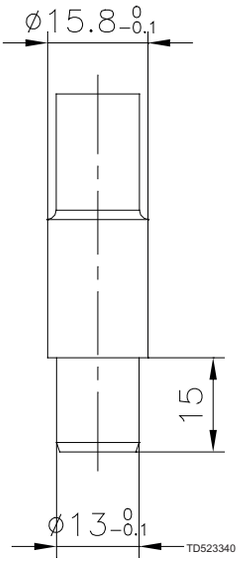

Sketch of tools for replacement of Main collars:

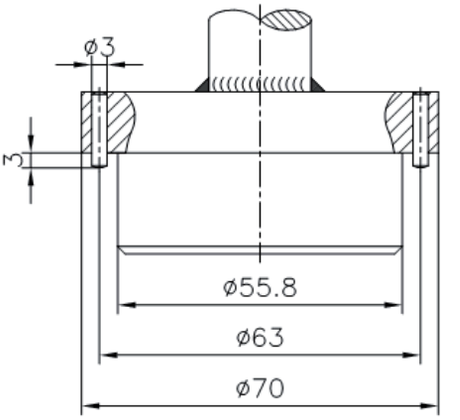

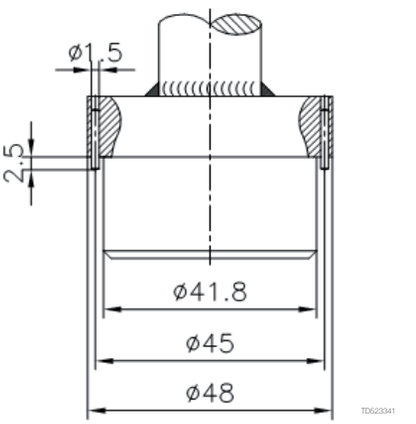

Pos	Qty	Denomination	Item no.
Tools			
		Standard Tool kit for Toftejorg MultiJet 40	TE81B055
Consisting of:			
	1	Hex Key for Screw	TE134
	2	Hex Screwdriver for Screw	TE134A
	1	Socket wrench for Hex Screw	TE462A
Available on request:			
	1	Pusher for Collar bush, 1½"	TE81B033

1.5

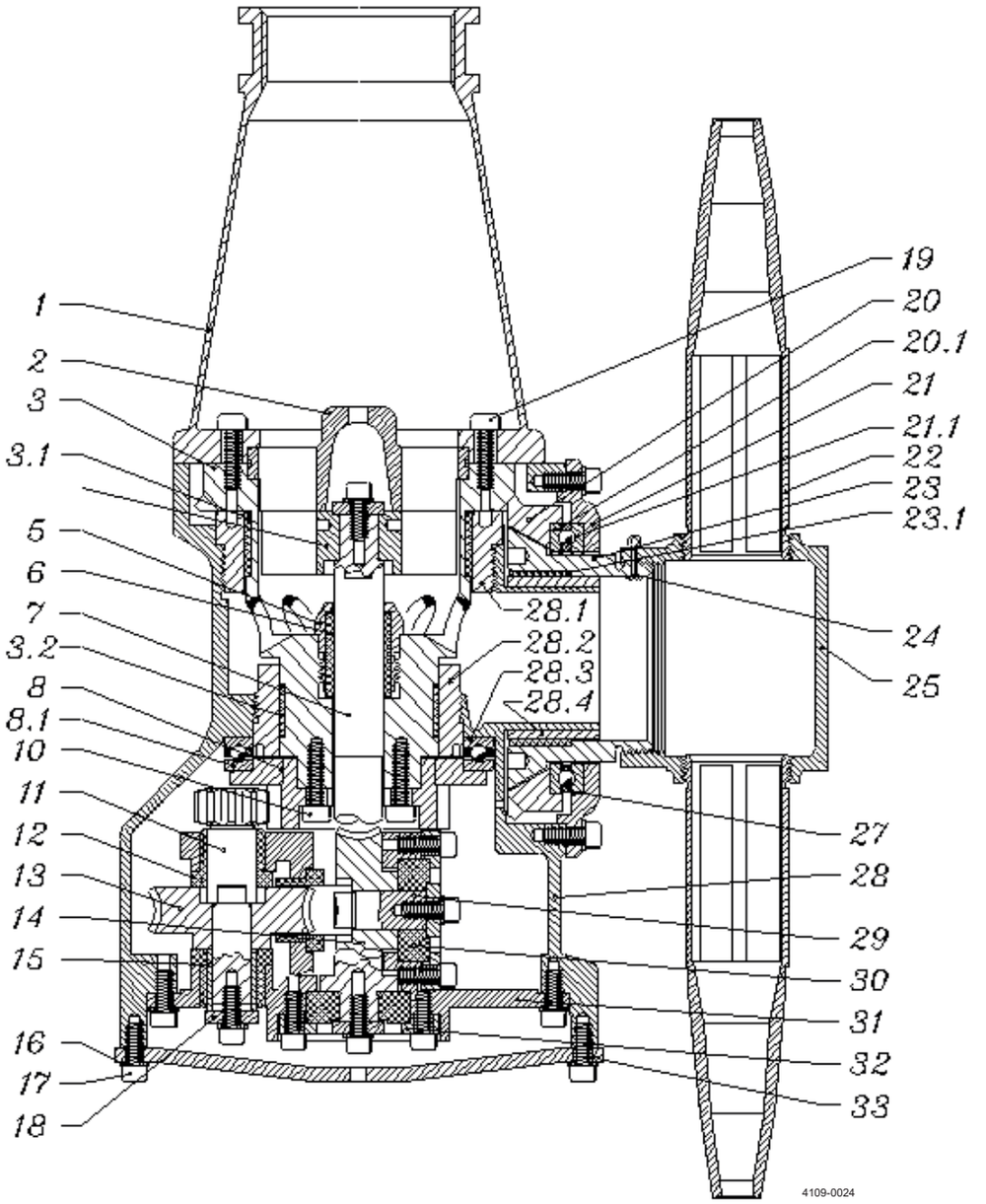
1
2
3
3.1
5
6
7
3.2
8
8.1
10
11
12
13
14
15
16
17
18
19
20
20.1
21
21.1
22
23
23.1
24
25
27
28
29
30
31
32
33
28.1
28.2
28.3
28.4
4109-0024

Pos		Qty	Denomination	Item no.	Material	Remark
1	□	1	Top Cone, 2" BSP	TE22M503	Stainless steel	Spare part
	□	1	Top Cone, 2" " NPT	TE22M504	Stainless steel	Spare part
2	□	1	Guide, 100%	TE603	Stainless steel	Spare part
	□	1	Guide ring, 0%	TE1030	Stainless steel	Spare part
3		1	Stem	TE604Z	Stainless steel	Spare part
3.1		1	Top Liner	TE9041*	Polymer	Wear part
3.2		1	Bottom Liner	TEB6042*	Polymer	Wear part
4		1	Impeller, 100%	TE605	Stainless steel	Spare part
5		1	Gland	TE608Z	Stainless steel	Spare part
6	✧●	1	Main bush	TE609P	Polymer	Wear part
7	●	1	Turbine shaft	TE911K	Stainless steel	Wear part
8		1	Gear wheel w. ball race	TE51213	Stainless steel	Spare part
8.1	●	1	Ball race	TE1261	Stainless steel	Wear part
10		6	Screw	TE120	Stainless steel	Spare part
11		1	Pinion	TE114	Stainless steel	Spare part
12	✧●	3	Collar bush	TE615K	Carbon	Wear part
13	✧●	1	Worm wheel w. reinforcem.	TE22A360	Polymer/Stainless steel	Wear part
14	✧●	1	Worm wheel w. reinforcem.	TE22A360	Polymer/Stainless steel	Wear part
15		1	Journal	TE117	Stainless steel	Spare part
16		21	Spring washer	TE156	Stainless steel	Spare part
17		29	Screw	TE118	Stainless steel	Spare part
18		4	Washer	TE619A	Stainless steel	Spare part
19		8	Screw	TE902H	Stainless steel	Spare part
20		1	Bevel gear w. ball race	TE622S	Stainless steel	Spare part
20.1	●	1	Ball race	TE1261	Stainless steel	Wear part
21		1	Hub cover	TE22M502	Stainless steel	Spare part
21.1	●	1	Ball race	TE1261	Stainless steel	Wear part
22	□	2	Nozzle, Ø11	TE50C011	Stainless steel	Spare part
	□	2	Nozzle, Ø12	TE50C012	Stainless steel	Spare part
	□	2	Nozzle, Ø13	TE50C013	Stainless steel	Spare part
	□	2	Nozzle, Ø14	TE50C014	Stainless steel	Spare part
	□	2	Nozzle, Ø15	TE50C015	Stainless steel	Spare part
23		1	Hub conical part	TE6240KZ	Stainless steel	Spare part
23.1	●	1	Hub liner, [1]	TE62411	Polymer	Wear part
24	●	1	Cotter pin	TE448	Stainless steel	Wear part
25		1	Hub nozzle part	TE624215	Stainless steel	Wear part
27	●	2	Ball retainer with balls	TE126S	Polymer/Stainless steel	Wear part
28		1	Body, [2]		Stainless steel	
28.1	●	1	Main collar upper	TE127Z1	Stainless steel	Wear part
28.2	●	1	Main collar lower	TE127Z2	Stainless steel	Wear part
28.3	●	1	Ball race	TE1261	Stainless steel	Wear part
28.4	●	1	Hub collar	TE1273	Stainless steel	Wear part
29	●	1	Horizontal shaft	TE128Z	Stainless steel	Wear part
30	✧●	2	Slide bearing	TE929K	Carbon	Wear part
31		1	Gear frame	TE630	Stainless steel	Spare part
32		2	Bearing cover	TE531	Stainless steel	Spare part
33		1	Bottom cover	TE22M501	Stainless steel	Spare part
-	✧●	4	Locking wire	TE651		

		Item no.
Service kits		
✧	**Minor service kit for MultiJet 50**	**TE55M000**
●	**Major service kit for MultiJet 50**	**TE55M100**

[1] Position 23.1: If blue liners on Stem are extremely worn, they can be replaced. This part requires that a precise procedure is followed to accomplish installation. It is highly recommended that an authorized Alfa Laval Tank Equipment Service Center perform the replacement when necessary.
[2]: Position 28 is not sold as single Spare part component but only as part of a machine maintenance/repair order. For further information please contact Alfa Laval Customer Support.

□ Configuration according to delivery note/order.

Parts marked with ✧ are included in the Minor Service Kit: TE55M000
Parts marked with ● are included in the Major Service Kit: TE55M010

The machine can be delivered with ATEX/IECEx certification.

1.5

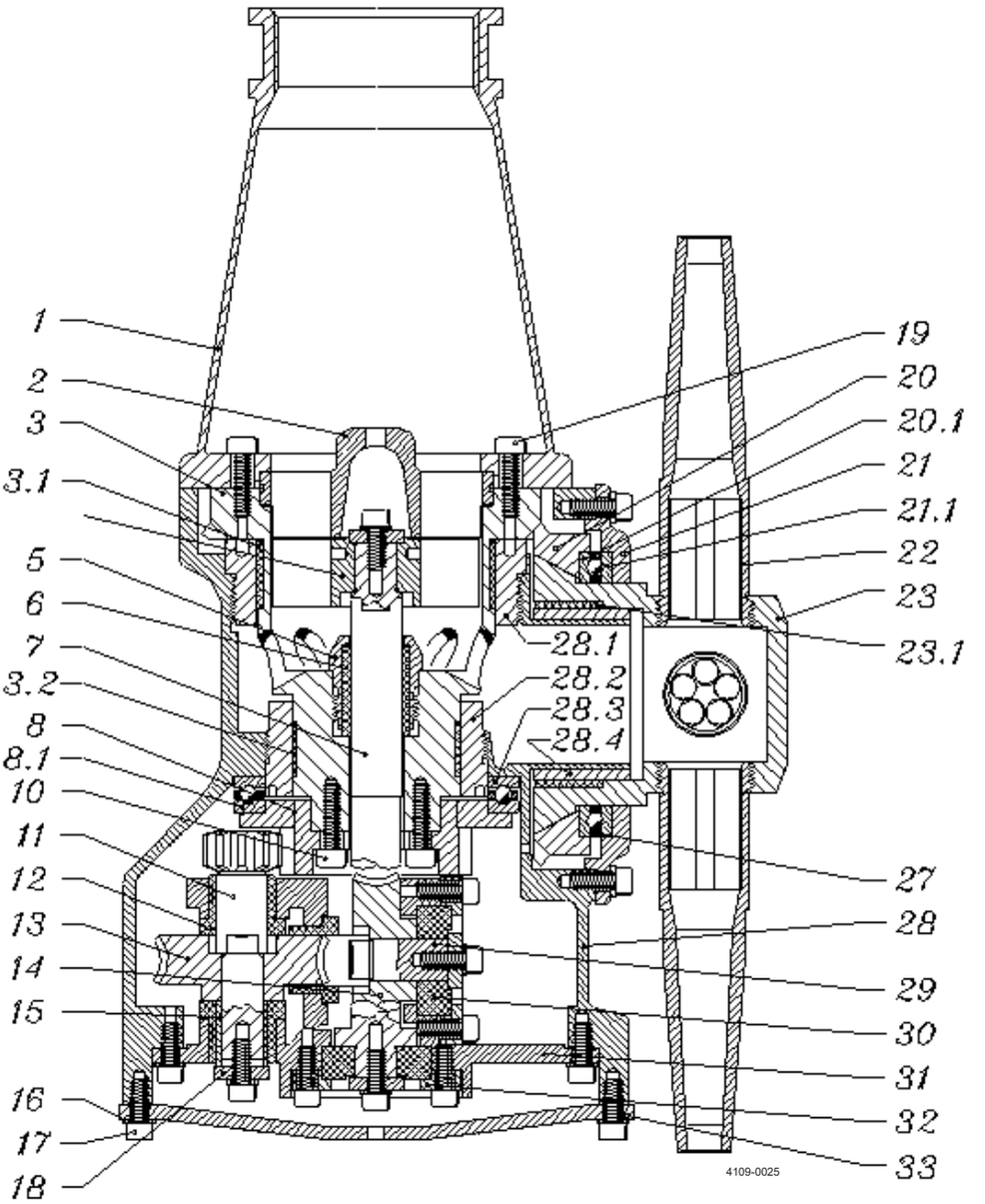
1
2
3
3.1
5
6
7
3.2
8
8.1
10
11
12
13
14
15
16
17
18
19
20
20.1
21
21.1
22
23
23.1
28.1
28.2
28.3
28.4
27
28
29
30
31
32
33
4109-0025

Pos		Qty	Denomination	Item no.	Material	Remark
1	□	1	Top Cone, 2" BSP	TE22M503	Stainless steel	Spare part
	□	1	Top Cone, 2" NPT	TE22M504	Stainless steel	Spare part
2	□	1	Guide, 100%	TE603	Stainless steel	Spare part
	□	1	Guide ring, 0%	TE1030	Stainless steel	Spare part
3		1	Stem	TE604Z	Stainless steel	Spare part
3.1		1	Top Liner	TE9041*	Polymer	Wear part
3.2		1	Bottom Liner	TEB6042*	Polymer	Wear part
4		1	Impeller, 100%	TE605	Stainless steel	Spare part
5		1	Gland	TE608Z	Stainless steel	Spare part
6	✧●	1	Main bush	TE609P	Polymer	Wear part
7	●	1	Turbine shaft	TE911K	Stainless steel	Wear part
8		1	Gear wheel w. ball race	TE51213	Stainless steel	Spare part
8.1	●	1	Ball race	TE1261	Stainless steel	Wear part
10		6	Screw	TE120	Stainless steel	Spare part
11		1	Pinion	TE114	Stainless steel	Spare part
12	✧●	3	Collar bush	TE615K	Carbon	Wear part
13	✧●	1	Worm wheel w. reinforcem.	TE22A360	Polymer/Stainless steel	Wear part
14	✧●	1	Worm wheel w. reinforcem.	TE22A360	Polymer/Stainless steel	Wear part
15		1	Journal	TE117	Stainless steel	Spare part
16		21	Spring washer	TE156	Stainless steel	Spare part
17		29	Screw	TE118	Stainless steel	Spare part
18		4	Washer	TE619A	Stainless steel	Spare part
19		8	Screw	TE902H	Stainless steel	Spare part
20		1	Bevel gear w. ball race	TE622S	Stainless steel	Spare part
20.1	●	1	Ball race	TE1261	Stainless steel	Wear part
21		1	Hub cover	TE22M502	Stainless steel	Spare part
21.1	●	1	Ball race	TE1261	Stainless steel	Wear part
22	□	4	Nozzle, ø8	TE50B008	Stainless steel	Spare part
	□	4	Nozzle, ø9	TE50B009	Stainless steel	Spare part
	□	4	Nozzle, ø10	TE50B010	Stainless steel	Spare part
23		1	Hub	TE6244KZ	Stainless steel	Spare part
23.1	●	1	Hub liner , [1]	TE62411	Polymer	Wear part
27	●	2	Ball retainer with balls	TE126S	Polymer/Stainless steel	Wear part
28		1	Body, [2]		Stainless steel	
28.1	●	1	Main collar upper	TE127Z1	Stainless steel	Wear part
28.2	●	1	Main collar lower	TE127Z2	Stainless steel	Wear part
28.3	●	1	Ball race	TE1261	Stainless steel	Wear part
28.4	●	1	Hub collar	TE1273	Stainless steel	Wear part
29	●	1	Horizontal shaft	TE128Z	Stainless steel	Wear part
30	✧●	2	Slide bearing	TE929K	Carbon	Wear part
31		1	Gear frame with bushes	TE630	Stainless steel	Spare part
32		2	Bearing cover	TE531	Stainless steel	Spare part
33		1	Bottom cover	TE22M501	Stainless steel	Spare part
	✧●	4	Locking wire	TE651		

		Item no.
Service kits		
✧	**Minor service kit for MultiJet 50**	**TE55M000**
●	**Major service kit for MultiJet 50**	**TE55M100**

[1] Position 23.1: If blue liners on Stem are extremely worn, they can be replaced. This part requires that a precise procedure is followed to accomplish installation. It is highly recommended that an authorized Alfa Laval Tank Equipment Service Center perform the replacement when necessary.
[2]: Position 28 is not sold as single Spare part component but only as part of a machine maintenance/repair order. For further information please contact Alfa Laval Customer Support.

□ Configuration according to delivery note/order.

Parts marked with ✧ are included in the Minor Service Kit: TE55M000
Parts marked with ● are included in the Major Service Kit: TE55M010

The machine can be delivered with ATEX/IECEx certification.

1.5

Service intervals

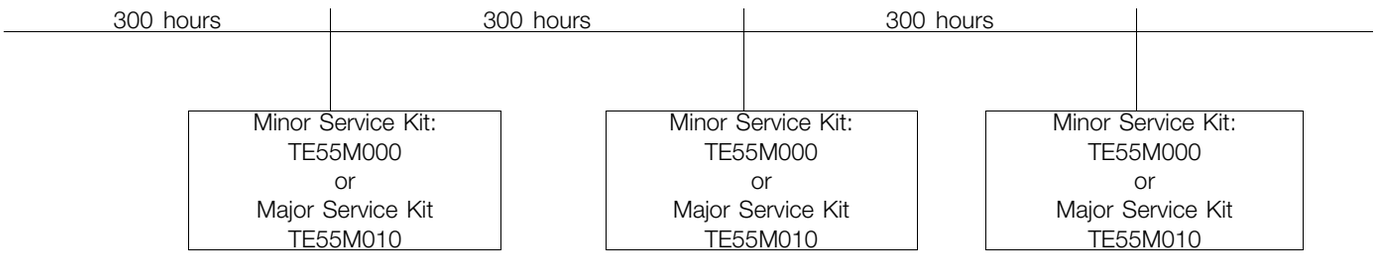

NOTE
The service intervals are recommended on the basis of pure liquids. When liquids contain particles and other kind of abrasives, we recommend shorter service intervals depending on the actual running conditions.

Pos	Qty	Denomination	Item no.
Minor service kit			
		Minor service kit	TE55M000
Consisting of:			
	1	Main Bush	TE609P
	3	Collar Bush	TE615K
	1	Worm wheel reinforced	TE22A360
	1	Worm wheel reinforced	TE22A360
	4	Locking Wire	TE651
	2	Slide Bearing	TE929K

Pos	Qty	Denomination	Item no.
Major service kit			
		Major service kit	TE55M010
Consisting of:			
	1	Turbine Shaft	TE911K
	1	Ball Race	TE126-1
	1	Ball Race	TE126-1
	1	Ball Race	TE126-1
	1	Ball Race	TE126-1
	1	Hub Liner	TE624-11
	1	Split pin	TE448
	2	Ball Retainer with Balls	TE126S
	1	Main Collar Upper w. thread	TE127Z1
	1	Main Collar Lower w. thread	TE127Z2
	1	Hub Collar	TE127-3
	1	Horizontal Shaft	TE128Z

Tools

1.5

TE81B031: Pusher for Gear frame

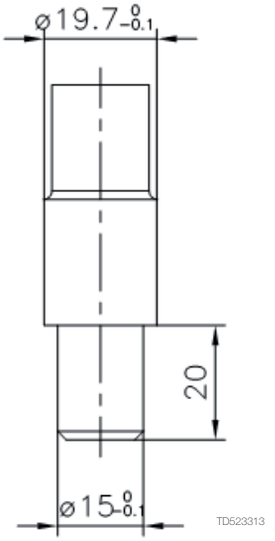

TE81B032: Fixture set f. Gear frame

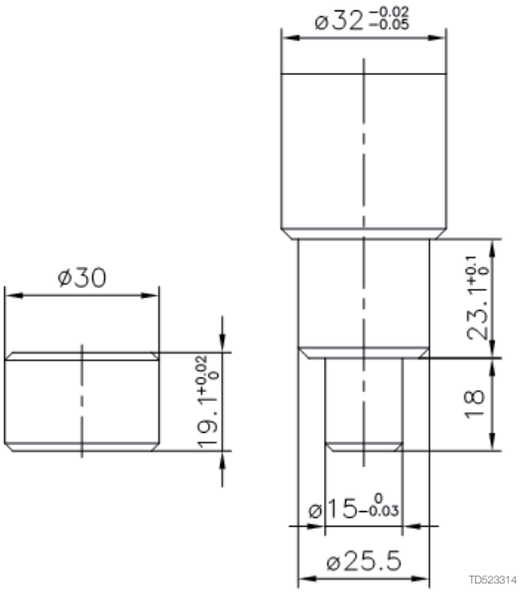

A: TE81B131 Tool for upper collar (2" TCM) compl. - B: TE81B132 Tool for lower collar (2"+ 3" TCM) compl.

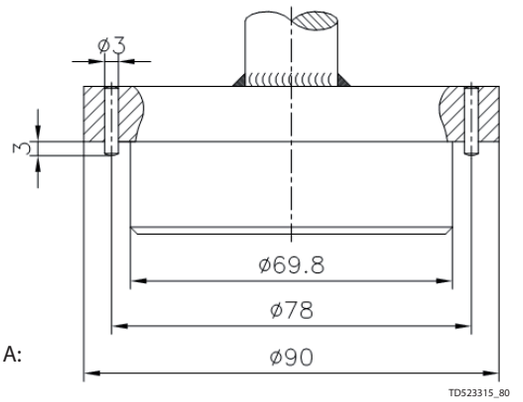

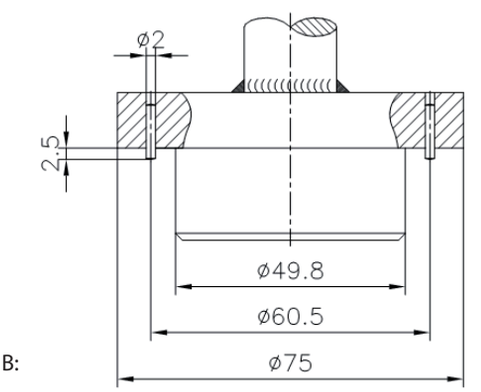

Pos	Qty	Denomination	Item no.
Tools			
		Standard tool kit	TE81B080
Consisting of:			
	1	Hex key	TE134
	1	Hex screwdriver	TE134A
	1	Hex key	TE135
	1	Hex screwdriver	TE135A

Pos	Qty	Denomination	Item no.
Tools - available on request:			
		Pusher for Gear frame	TE81B031
		Fixture set f. Gear frame	TE81B032
		Tool for upper collar (2" TCM) compl.	TE81B131
		Tool for lower collar (2"+ 3" TCM) compl.	TE81B132

1.5

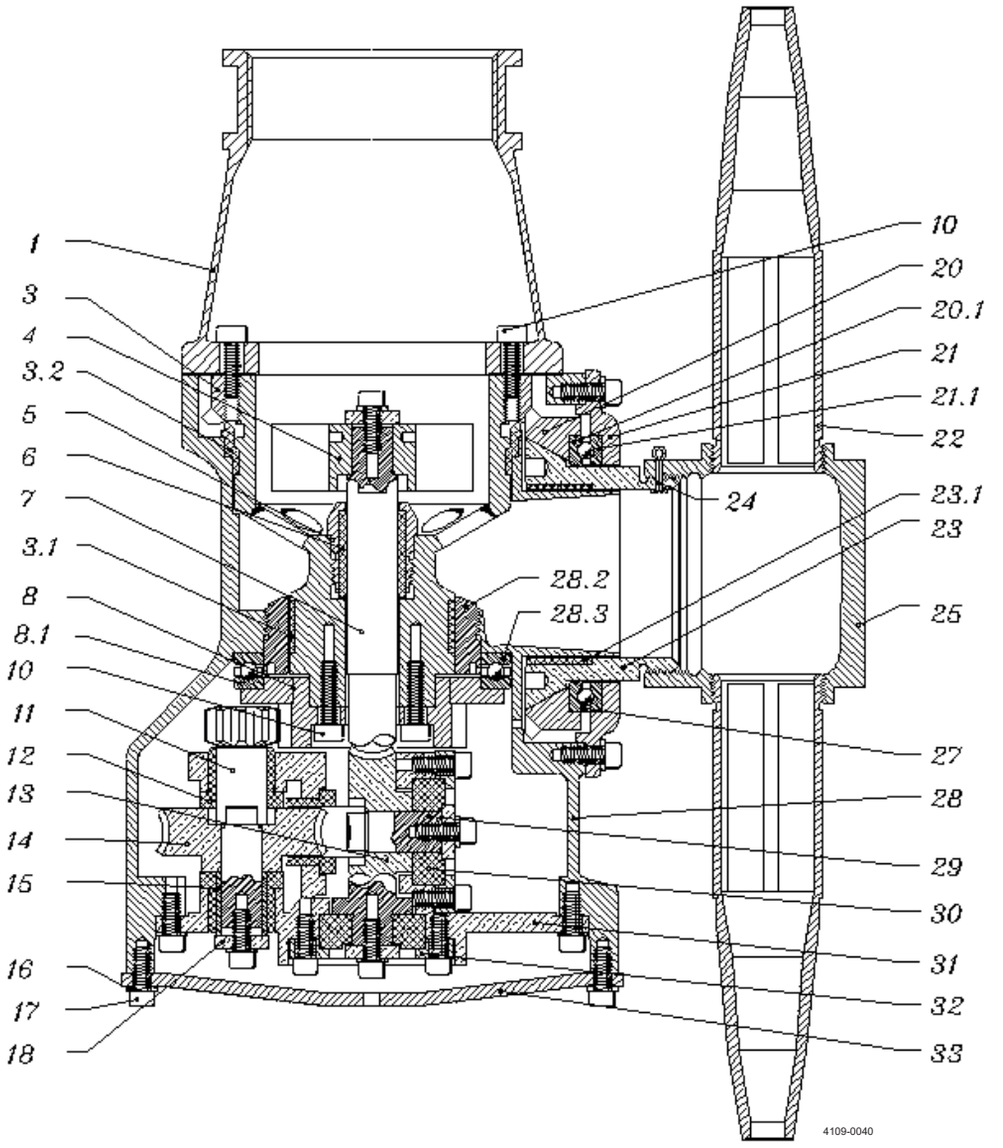
1
3
4
3.2
5
6
7
3.1
8
8.1
10
11
12
13
14
15
16
17
18
10
20
20.1
21
21.1
22
24
23.1
23
28.2
28.3
25
27
28
29
30
31
32
33
4109-0040

Pos		Qty	Denomination	Item no.	Material	Remark
1	□	1	Cone, 2½" BSP	TE23M503	Stainless steel	Spare part
	□	1	Cone, 2½" NPT	TE23M504	Stainless steel	Spare part
3		1	Stem	TEB604Z	Stainless steel/polymer	Spare part
3.1		1	Bottom liner	TEB6042*	Polymer	Wear part
3.2		1	Top liner	TEB6041*	Polymer	Wear part
4		1	Impeller, 100%	TEB605	Stainless steel	Spare part
5		1	Gland	TE608Z	Stainless steel	Spare part
6	♦✧	1	Main bush	TE609P	Polymer	Wear part
		1	Main bush	TE22B575	Polymer	Wear part
7	♦	1	Turbine shaft	TE911K	Stainless steel	Wear part
8		1	Gear wheel w. ball race	TE51213	Stainless steel	Spare part
8.1	♦	1	Ball race	TE1261	Stainless steel	Wear part
10		14	Screw	TE120	Stainless steel	Spare part
11		1	Pinion	TE114	Stainless steel	Spare part
12	□♦✧	3	Collar bush	TE615K	Carbon	Wear part
	□	3	Collar bush	TE22A585	Polymer	Wear part
13	♦✧	1	Wormwheel w. reinforc.	TE22A360	Polymer/Stainless steel	Wear part
14	□♦✧	1	Worm wheel, w. reinforce.	TE22A360	Polymer/Stainless steel	Wear part
	□	1	Worm wheel, E-gear	TE22A564	Stainless steel	Wear part
15		1	Journal	TE117	Stainless steel	Spare part
16		21	Spring washer	TE156	Stainless steel	Spare part
17		29	Screw	TE118	Stainless steel	Spare part
18		4	Washer	TE619A	Stainless steel	Spare part
20		1	Bevel gear w. ball race	TE622S	Stainless steel	Spare part
20.1	♦	1	Ball race	TE1261	Stainless steel	Wear part
21		1	Hub cover	TE22M502	Stainless steel	Spare part
21.1	♦	1	Ball race	TE1261	Stainless steel	Wear part
22	□	2	Nozzle, ø15 mm	TE50C015	Stainless steel	Spare part
	□	2	Nozzle, ø17 mm	TE50C017	Stainless steel	Spare part
	□	2	Nozzle, ø19 mm	TE50C019	Stainless steel	Spare part
	□	2	Nozzle, ø21 mm	TE50C021	Stainless steel	Spare part
23		1	Hub conical part	TE624OKZ	Stainless steel/polymer	Spare part
23.1	♦	1	Hub liner, [1]	TE62411	Polymer	Wear part
24	♦	1	Cotter pin	TE448	Stainless steel	Spare part
25		1	Hub nozzle part	TE624215	Stainless steel	Spare part
27	♦	2	Ball retainer w. balls	TE126S	Polymer/Stainless steel	Wear part
28		1	Body, [2]		Stainless steel	
28.2	♦	1	Main collar lower	TE22E516	Stainless steel	Wear part
28.3	♦	1	Ball race	TE1261	Stainless steel	Wear part
29	□♦	1	Horizontal shaft	TE128Z	Stainless steel	Wear part
	□	1	Horizontal shaft, E-gear	TE128E	Stainless steel	Wear part
30	♦✧	2	Slide bearing	TE929K	Carbon	Wear part
		2	Slide bearing	TE22A570	Polymer	Wear part
31		1	Gear frame w. bushes	TE630R	Stainless steel/carbon	Spare part
32		2	Bearing cover	TE531	Stainless steel	Spare part
33		1	Bottom cover	TE22M501	Stainless steel	Spare part
-	♦✧	4	Locking wire	TE651		

Service kits

	Item no.
MINOR service kit for MultiJet 65 (PTFE)	TE55M000
MAJOR service kit for MultiJet 65 (PTFE)	TE55M010

[1] Position 23.1: If blue liners on Stem are extremely worn, they can be replaced. This part requires that a precise procedure is followed to accomplish installation. It is highly recommended that an authorized Alfa Laval Tank Equipment Service Center perform the replacement when necessary.
[2]: Position 28 is not sold as single Spare part component but only as part of a machine maintenance/repair order. For further information please contact Alfa Laval Customer Support.

□ Configuration according to delivery note/order.

Parts marked with ✧ are included in the Minor Service Kit (PTFE): TE55M000
Parts marked with ♦ are included in the Major Service Kit (PTFE): TE55M010

The machine can be delivered with ATEX/IECEx certification.

1.5

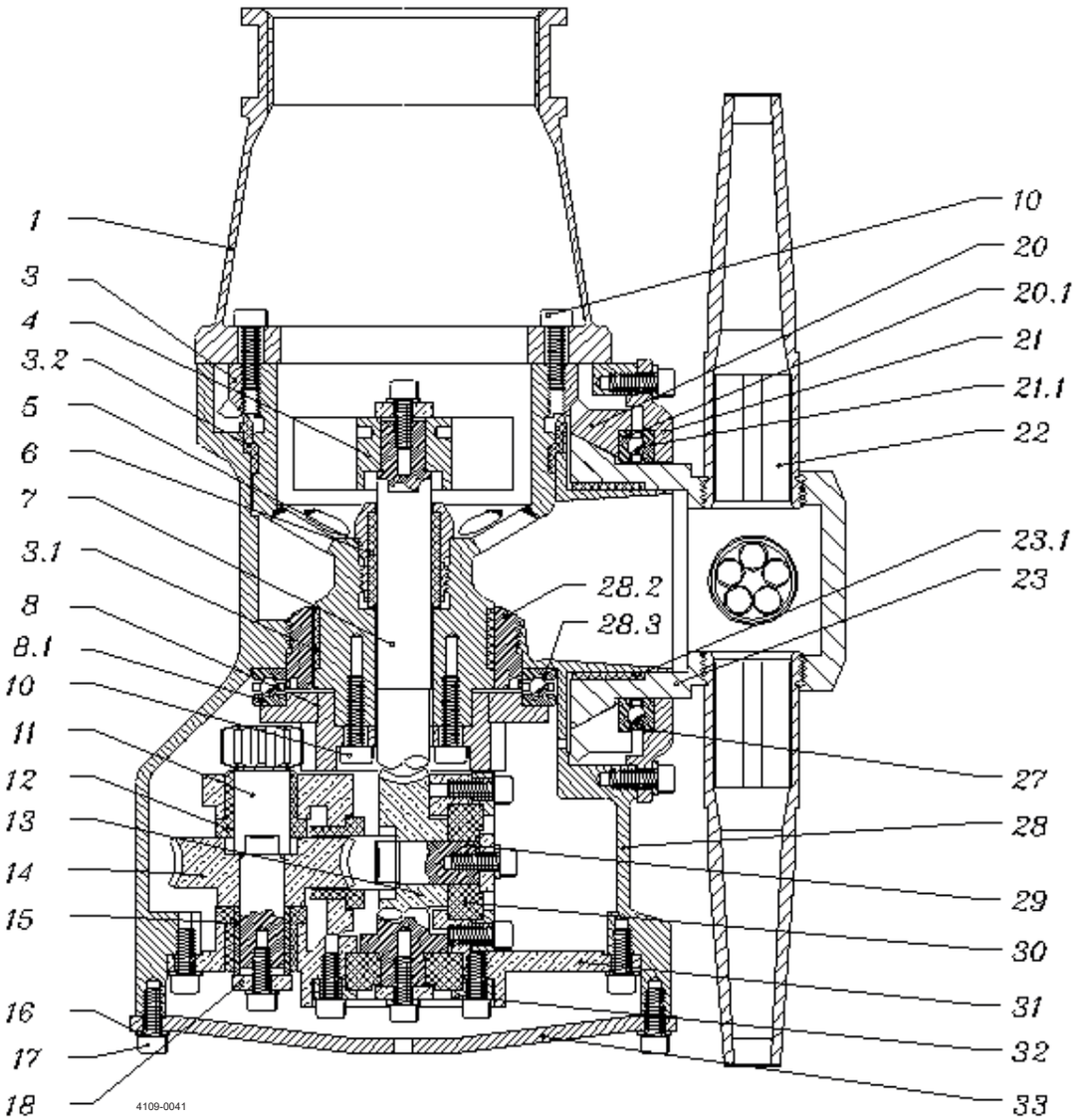
1
3
4
3.2
5
6
7
3.1
8
8.1
10
11
12
13
14
15
16
17
18
4109-0041
10
20
20.1
21
21.1
22
23.1
23
28.2
28.3
27
28
29
30
31
32
33

Pos		Qty	Denomination	Item no.	Material	Remark
1	□	1	Cone, 2½" BSP	TE23M503	Stainless steel	Spare part
	□	1	Cone, 2½" NPT	TE23M504	Stainless steel	Spare part
3		1	Stem	TEB604Z	Stainless steel/polymer	Spare part
3.1		1	Bottom liner	TEB6042*	Polymer	Wear part
3.2		1	Top liner	TEB6041*	Polymer	Wear part
4		1	Impeller, 100%	TEB605	Stainless steel	Spare part
5		1	Gland	TE608Z	Stainless steel	Spare part
6	♦✧	1	Main bush	TE609P	Polymer	Wear part
7	♦	1	Turbine shaft	TE911K	Stainless steel	Wear part
8		1	Gear wheel w. ball race	TE51213	Stainless steel	Spare part
8.1	♦	1	Ball race	TE1261	Stainless steel	Wear part
10		14	Screw	TE120	Stainless steel	Spare part
11		1	Pinion	TE114	Stainless steel	Spare part
12	□♦✧	3	Collar bush	TE615K	Carbon	Wear part
13	♦✧	1	Wormwheel w. reinforc.	TE22A360	Polymer/Stainless steel	Wear part
14	♦✧	1	Worm wheel, w. reinforce.	TE22A360	Polymer/Stainless steel	Wear part
15		1	Journal	TE117	Stainless steel	Spare part
16		21	Spring washer	TE156	Stainless steel	Spare part
17		29	Screw	TE118	Stainless steel	Spare part
18		4	Washer	TE619A	Stainless steel	Spare part
20		1	Bevel gear w. ball race	TE622S	Stainless steel	Spare part
20.1	♦	1	Ball race	TE1261	Stainless steel	Wear part
21		1	Hub cover	TE22M502	Stainless steel	Spare part
21.1	♦	1	Ball race	TE1261	Stainless steel	Wear part
22	□	4	Nozzle, ø12 mm	TE50B012	Stainless steel	Spare part
	□	4	Nozzle, ø13 mm	TE50B013	Stainless steel	Spare part
	□	4	Nozzle, ø14 mm	TE50B014	Stainless steel	Spare part
	□	4	Nozzle, ø15 mm	TE50B015	Stainless steel	Spare part
23		1	Hub with liner	TE6244KZ	Stainless steel/polymer	Spare part
23.1	♦	1	Hub liner, [1]	TE62411	Polymer	Wear part
27	♦	2	Ball retainer w. balls	TE126S	Polymer/Stainless steel	Wear part
28		1	Body, [2]		Stainless steel	
28.2	♦	1	Main collar lower	TE22E516	Stainless steel	Wear part
28.3	♦	1	Ball race	TE1261	Stainless steel	Wear part
29	♦	1	Horizontal shaft	TE128Z	Stainless steel	Wear part
30	♦✧	2	Slide bearing	TE929K	Carbon	Wear part
		2	Slide bearing	TE22A570	Polymer	Wear part
31		1	Gear frame	TE630	Stainless steel	Spare part
32		2	Bearing cover	TE531	Stainless steel	Spare part
33		1	Bottom cover	TE22M501	Stainless steel	Spare part
-	♦✧	4	Locking wire	TE651		

	Item no.
Service kits	
MINOR service kit for MultiJet 65 (PTFE)	TE55M000
MAJOR service kit for MultiJet 65 (PTFE)	TE55M010

[1] Position 23.1: If blue liners on Stem are extremely worn, they can be replaced. This part requires that a precise procedure is followed to accomplish installation. It is highly recommended that an authorized Alfa Laval Tank Equipment Service Center perform the replacement when necessary.
[2]: Position 28 is not sold as single Spare part component but only as part of a machine maintenance/repair order. For further information please contact Alfa Laval Customer Support.

□ Configuration according to delivery note/order.

Parts marked with ✧ are included in the Minor Service Kit (PTFE): TE55M000
Parts marked with ♦ are included in the Major Service Kit (PTFE): TE55M010

The machine can be delivered with ATEX/IECEx certification.

1.5

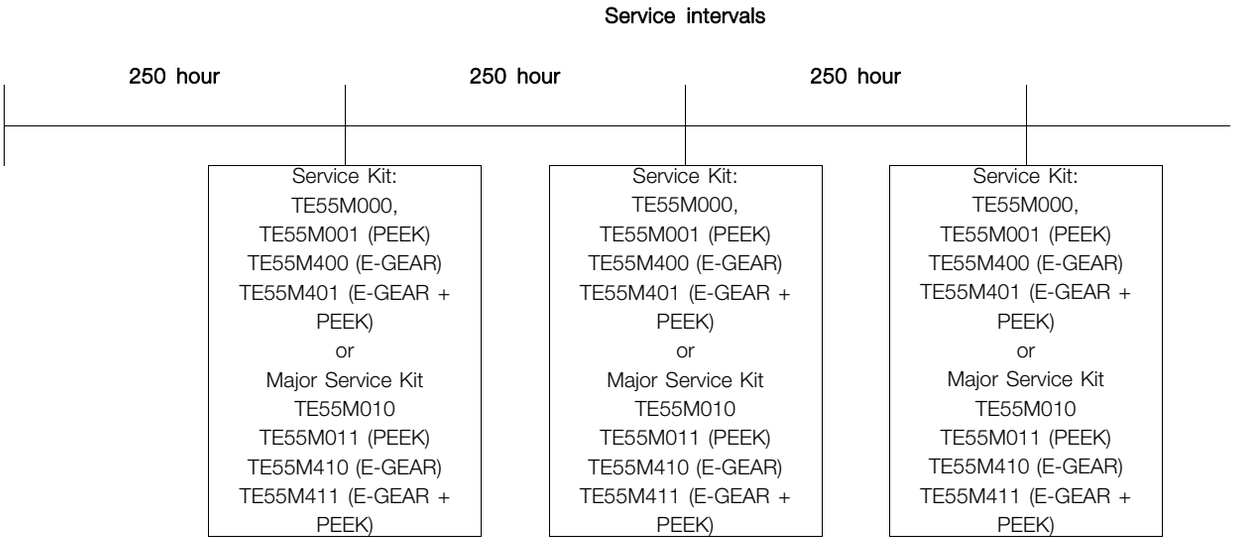

NOTE
The service intervals are recommended on the basis of pure liquids. When liquids contain particles and other kind of abrasives, we recommend shorter service intervals depending on the actual running conditions.

Pos	Qty	Denomination	Item no.
Minor service kits			
		Service Kit Minor for Toftejorg MultiJet 65	TE55M000
Consisting of:			
	1	Main bush	TE609P
	3	Collar bush	TE615K
	1	Worm wheel w. reinforcement	TE22A360
	1	Worm wheel w. reinforcement	TE22A360
	2	Slide bearing	TE929K
	4	Locking Wire	TE651

Pos	Qty	Denomination	Item no.
		Service Kit Minor for Toftejorg MULTIJET 65 (PEEK)	TE55M001
Consisting of:			
6	1	Main bush	TE22B575
12	3	Collar bush	TE22A585
13	1	Worm wheel w. reinforcement	TE22A360
14	1	Worm wheel w. reinforcement	TE22A360
30	2	Slide bearing	TE22A570
-	4	Locking Wire	TE651

Pos	Qty	Denomination	Item no.
		Service Kit Minor for Toftejorg MultiJet 65 (E-gear)	TE55M400
Consisting of			
6	1	Main bush	TE609P
12	3	Collar bush	TE615K
13	1	Worm wheel w. reinforcement	TE22A360
14	1	Worm wheel w. reinforcement, E-gear	TE22A564
30	2	Slide bearing	TE929K
-	4	Locking Wire	TE651

Pos	Qty	Denomination	Item no.
		Service Kit Minor for Toftejorg MultiJet 65 (E-gear, PEEK)	TE55M401
Consisting of			
6	1	Main bush	TE609P
12	3	Collar bush	TE22A585
13	1	Worm wheel w. reinforcement	TE22A360
14	1	Worm wheel w. reinforcement, E-gear	TE22A364
30	2	Slide bearing	TE929K
-	4	Locking Wire	TE651

1.5

Service intervals

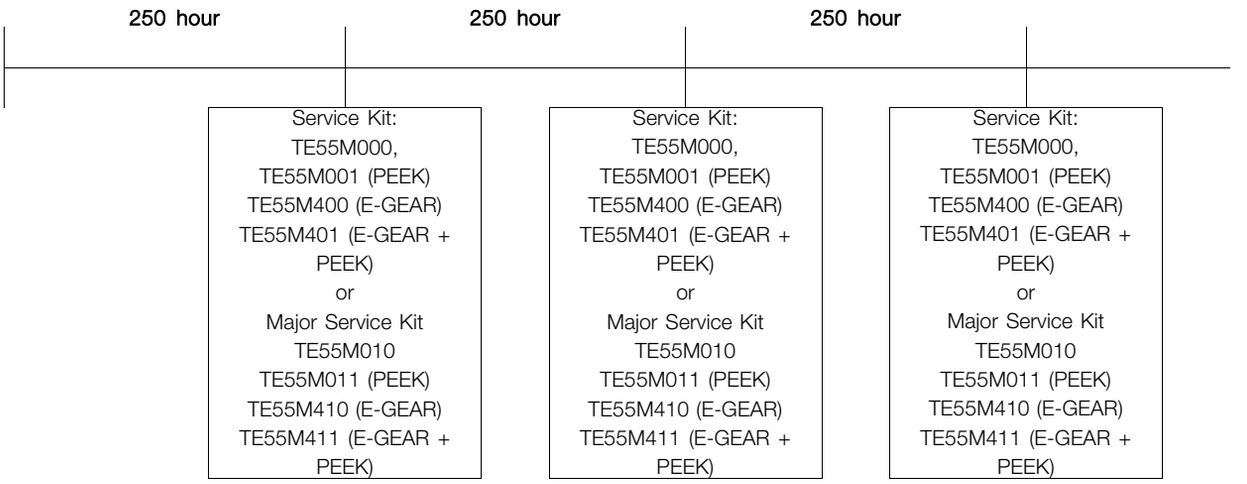

NOTE
The service intervals are recommended on the basis of pure liquids. When liquids contain particles and other kind of abrasives, we recommend shorter service intervals depending on the actual running conditions.

Major service kits

Pos	Qty	Denomination	Item no.
		Service Kit Major for Toftejorg MultiJet 65	TE55M010
Consisting of:			
7	1	Turbine shaft	TE911K
8.1	1	Ball race	TE1261
20.1	1	Ball race	TE1261
21.1	1	Ball race	TE1261
28.3	1	Ball race	TE1261
23.1	1	Hub liner	TE62411*
24	1	Cotter pin	TE448
27	2	Ball retainer w balls.	TE126S
28.1	1	Main collar, upper	TE127Z1
28.2	1	Main collar, lower	TE127Z2
28.4	1	Collar, hub	TE1273
29	1	Horizontal shaft	TE128Z
-	1	Service Kit Minor	TE55M000

Pos	Qty	Denomination	Item no.
		Service Kit Major for Toftejorg MultiJet 65 (PEEK)	TE55M011
Consisting of:			
7	1	Turbine shaft	TE911K
8.1	1	Ball race	TE1261
20.1	1	Ball race	TE1261
21.1	1	Ball race	TE1261
23.1	1	Hub liner	TE62411*
24	1	Cotter pin	TE448
27	2	Ball retainer w balls.	TE126S
28.1	1	Main collar, upper	TE127Z1
28.2	1	Main collar, lower	TE127Z2
28.3	1	Ball race	TE1261
29	1	Horizontal shaft	TE128Z
-	1	Service Kit Minor	TE55M001

Pos	Qty	Denomination	Item no.
		Service Kit Major for Toftejorg MultiJet 65 (E-gear)	TE55M410
Consisting of:			
7	1	Turbine shaft	TE911K
8.1	1	Ball race	TE1261
20.1	1	Ball race	TE1261
21.1	1	Ball race	TE1261
23.1	1	Hub liner	TE62411*
24	1	Cotter pin	TE448
27	2	Ball retainer w balls.	TE126S
28.1	1	Main collar, upper	TE127Z1
28.2	1	Main collar, lower	TE127Z2
28.3	1	Ball race	TE1261
28.4	1	Hub collar	TE1273
29	1	Horizontal shaft	TE128E
-	1	Service Kit Minor	TE55M400

Pos	Qty	Denomination	Item no.
		Service Kit Major for Toftejorg MultiJet 65 (E-gear, PEEK)	TE55M411
Consisting of:			
7	1	Turbine shaft	TE911K
8.1	1	Ball race	TE1261
20.1	1	Ball race	TE1261
21.1	1	Ball race	TE1261
23.1	1	Hub liner	TE62411*
24	1	Cotter pin	TE448
27	2	Ball retainer w balls.	TE126S
28.1	1	Main collar, upper	TE127Z1
28.2	1	Main collar, lower	TE127Z2
28.3	1	Ball race	TE1261
28.4	1	Hub collar	TE1273
29	1	Horizontal shaft	TE128E
-	1	Service Kit Minor	TE55M401

*Note: If blue liners on Stem are extremely worn, they can be replaced. This part requires that a precise procedure is followed to accomplish installation. It is highly recommended that an authorized Alfa Laval Tank Equipment Service Center perform the replacement when necessary.

1.5

Sketch of tools for replacement of Collars bush:

TE81B031: Pusher for Gear frame

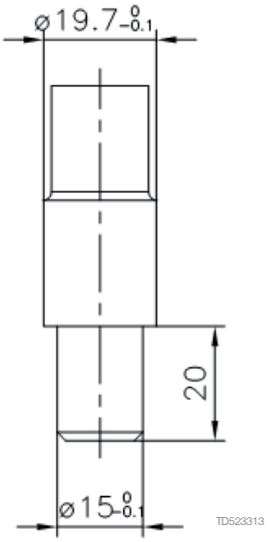

TE81B032: Fixture set f. Gear frame

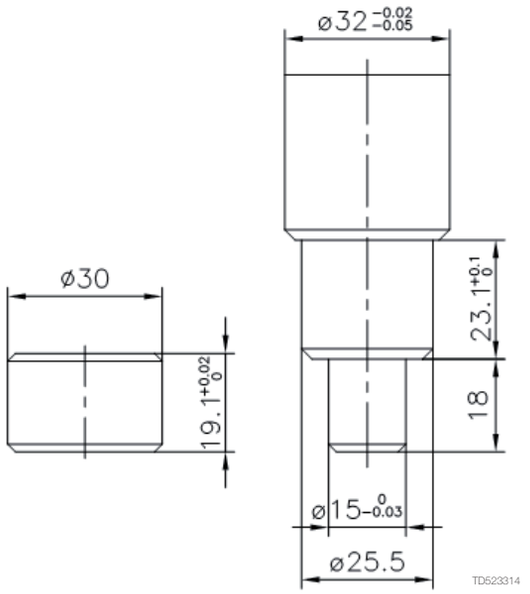

Sketch of tools for replacement of Main collars

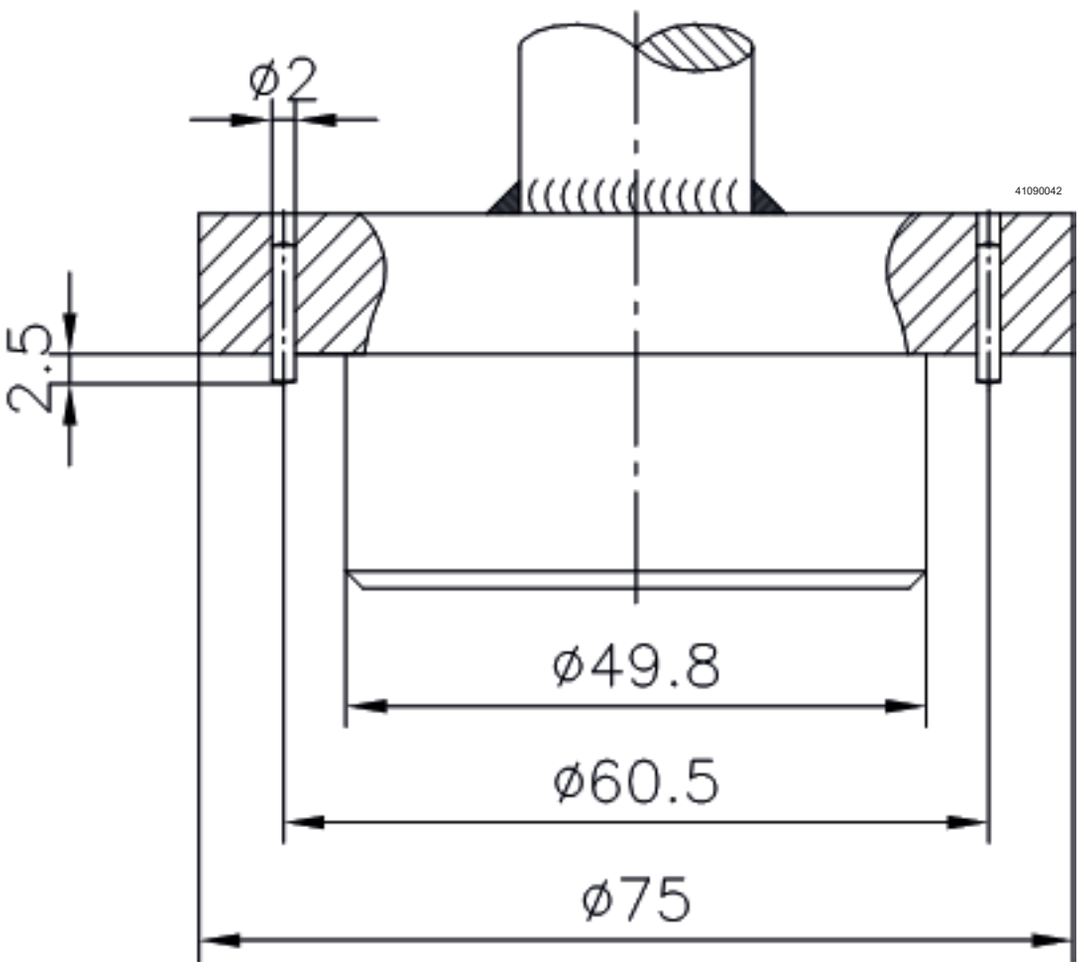

Pos	Qty	Denomination	Item no.
Tools			
		Standard tool kit	TE81B065
Consisting of:			
	1	Hex key	TE134
	1	Hex screwdriver	TE134A
	1	Hex key	TE135
	1	Hex screwdriver	TE135A
	1	Caliper	TE369

Pos	Qty	Denomination	Item no.
Tools - available on request:			
		Pusher for Gear frame	TE81B031
		Fixture set f. Gear frame	TE81B032
		Tool for upper collar (2" TCM) compl.	TE81B131

1.5

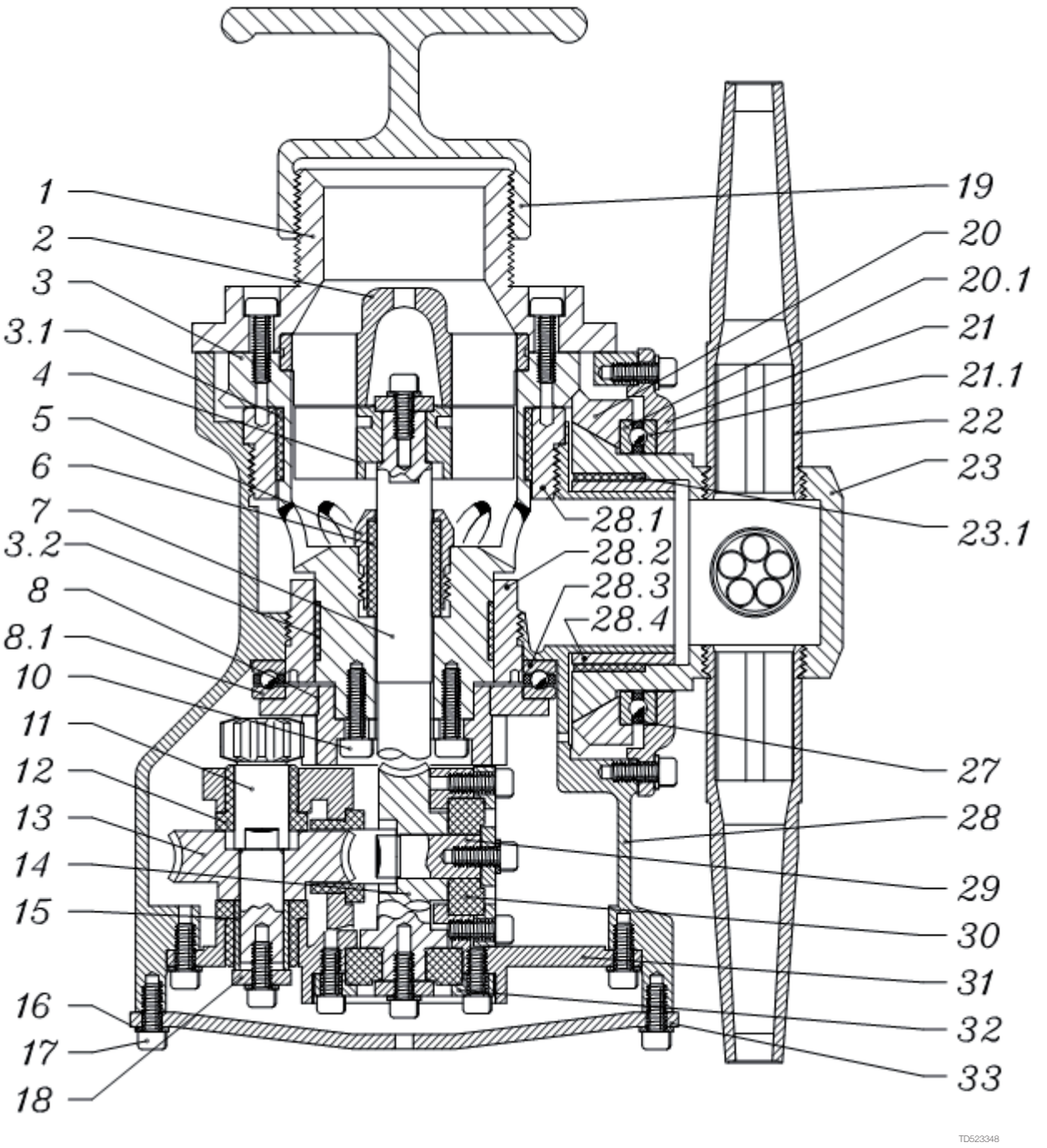
1
2
3
3.1
4
5
6
7
3.2
8
8.1
10
11
12
13
14
15
16
17
18
19
20
20.1
21
21.1
22
23
23.1
28.1
28.2
28.3
28.4
27
28
29
30
31
32
33
TD523348

Pos		Qty	Denomination	Item no.	Material	Remarks
1	□	1	Nipple, 2" BSP	TE22B500	Stainless steel	Spare part
	□	1	Nipple, 2" NPT	TE22B501	Stainless steel	Spare part
	□	1	Nipple, 2½" ASA-B26	TE22B502	Stainless steel	Spare part
2	□	1	Guide, 100%	TE603	Stainless steel	Spare part
	□	1	Guide ring, 0%	TE1030	Stainless steel	Spare part
3		1	Stem	TE604Z	Stainless steel	Spare part
3.1		1	Top Liner, [1]	TE9041	Polymer	Wear part
3.2		1	Bottom Liner, [1]	TEB6042	Polymer	Wear part
4		1	Impeller, 100%	TE605	Stainless steel	Spare part
5		1	Gland	TE608Z	Stainless steel	Spare part
6	□♦✧	1	Main bush	TE609P	Polymer	Wear part
	□○★	1	Main bush	TE22B575	Polymer	Wear part
7	♦★	1	Turbine shaft	TE911K	Stainless steel	Wear part
8		1	Gear wheel w. ball race	TE51213	Stainless steel	Spare part
8.1	♦★	1	Ball race	TE1261	Stainless steel	Wear part
10		14	Screw	TE120	Stainless steel	Spare part
11		1	Pinion	TE114	Stainless steel	Spare part
12	□♦✧	3	Collar bush	TE615K	Carbon	Wear part
	□○★	3	Collar bush	TE22A585	Polymer	Wear part
13	□♦○★✧	1	Worm wheel w. reinforcem.	TE22A360	Polymer/Stainless steel	Wear part
	□♦○★✧	1	Worm wheel w. reinforcem.	TE22A365	Polymer	Wear part
14	□	1	Worm wheel w. reinforcem.	TE22A360	Polymer/Stainless steel	Wear part
	□	1	Worm wheel w. reinforcem.	TE22A365	Polymer	Wear part
15		1	Journal	TE117	Stainless steel	Spare part
16		21	Spring washer	TE156	Stainless steel	Spare part
17		29	Screw	TE118	Stainless steel	Spare part
18		4	Washer	TE619A	Stainless steel	Spare part
19		1	Handle, 2"	TE101G	Polymer	Spare part
20		1	Bevel gear w. ball race	TE622S	Stainless steel	Spare part
20.1	♦★	1	Ball race	TE1261	Stainless steel	Wear part
21		1	Hub cover with ball race	TE22B340	Stainless steel	Spare part
21.1	♦★	1	Ball race	TE1261	Stainless steel	Wear part
22	□	4	Nozzle, ø8	TE50B008	Stainless steel	Spare part
	□	4	Nozzle, ø9	TE50B009	Stainless steel	Spare part
		4	Nozzle, ø10	TE50B010	Stainless steel	Spare part
	□	2	Nozzle, ø11	TE50B011	Stainless steel	Spare part
22.1		2	Plug	TE50B000	Stainless steel	Spare part
23		1	Hub	TE6244KZ	Stainless steel	Spare part
23.1	♦○	1	Hub liner , [1]	TE62411	Polymer	Wear part
27	♦★	2	Ball retainer with balls	TE126S	Polymer/Stainless steel	Wear part
28		1	Body with bearings, [2]		Stainless steel	
28.1	♦★	1	Main collar upper	TE127Z1	Stainless steel	Wear part
28.2	♦★	1	Main collar lower	TE127Z2	Stainless steel	Wear part
28.3	♦★	1	Ball race	TE1261	Stainless steel	Wear part
28.4	♦	1	Hub collar	TE1273	Stainless steel	Wear part
29	♦★	1	Horizontal shaft	TE128Z	Stainless steel	Wear part
30	□♦✧	2	Slide bearing	TE929K	Carbon	Wear part
	□○★	2	Slide bearing	TE22A570	Polymer	Wear part
31		1	Gear frame with bushes	TE630	Stainless steel/carbon	Spare part
32		2	Bearing cover	TE531	Stainless steel	Spare part
33		1	Bottom cover	TE6335	Stainless steel	Spare part
-	♦○★✧	4	Locking wire	TE651		

	Item no.
Service kits	
MINOR service kit (PTFE)	TE55M000
MAJOR service kit (PTFE)	TE55M010
MINOR service kit (PEEK)	TE55M001
MAJOR service kit (PEEK)	TE55M011

[1] If blue liners on Stem are extremely worn, they can be replaced. This part requires that a precise procedure is followed to accomplish installation. It is highly recommended that an authorized Alfa Laval Tank Equipment Service Center perform the replacement when necessary.

[2]: Position 28 is not sold as single Spare part component but only as part of a machine maintenance/repair order. For further information please contact Alfa Laval Customer Support.

❑ Configuration according to delivery note/order.

Please note that some of the polymer parts are in PEEK, which is not resistant to concentrated sulfuric acid.

The machine can be delivered with ATEX/IECEx certification.

1.5

Service intervals

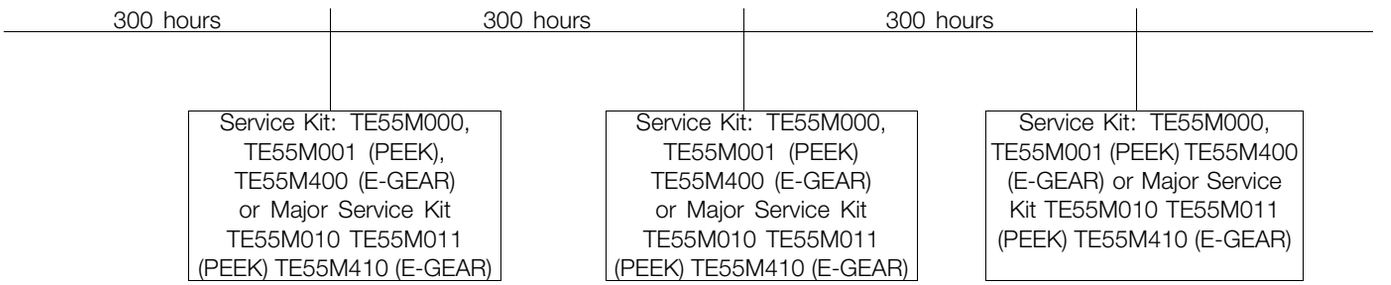

NOTE
The service intervals are recommended on the basis of pure liquids. When liquids contain particles and other kind of abrasives, we recommend shorter service intervals depending on the actual running conditions.

Pos	Qty	Denomination	Item no.
Minor service kits			
		Minor service kit for TZ-66 for all standard versions	TE55M000
Consisting of:			
	1	Main Bush	TE609P
	3	Collar Bush	TE615K
	1	Worm wheel reinforced	TE22A360
	1	Worm wheel reinforced	TE22A360
	4	Locking Wire	TE651
	2	Slide Bearing	TE929K

Pos	Qty	Denomination	Item no.
		Minor service kit for TZ-66 (PEEK)	TE55M001
Consisting of:			
	1	Main Bush	TE22B575
	3	Collar bush PEEK	TE22A585
	1	Worm wheel reinforced	TE22A365
	1	Worm wheel reinforced	TE22A365
	4	Locking Wire	TE651
	2	Slide bearing PEEK	TE22A570

Pos	Qty	Denomination	Item no.
		Minor service kit for TZ-66 (E-gear)	TE55M400
Consisting of:			
	1	Main Bush	TE609P
	3	Collar Bush	TE615K
	1	Worm wheel reinforced	TE22A360
	1	Worm wheel E-gear.	TE22A564
	4	Locking Wire	TE651
	2	Slide Bearing	TE929K

Pos	Qty	Denomination	Item no.
Major service kits			
		Major service kit for TZ-66 all standard versions	TE55M010
Consisting of:			
	1	Turbine Shaft	TE911K
	1	Ball Race	TE126-1
	1	Ball Race	TE126-1
	1	Ball Race	TE126-1
	1	Ball Race	TE126-1
	1	Hub Liner	TE624-11
	1	Split pin	TE448
	2	Ball Retainer with Balls	TE126S
	1	Main Collar Upper w. thread	TE127Z1
	1	Main Collar Lower w. thread	TE127Z2
	1	Hub Collar	TE127-3
	1	Horizontal Shaft	TE128Z

Pos	Qty	Denomination	Item no.
		Major service kit for TZ-66 (PEEK)	TE55M011
Consisting of:			
	1	Service Kit Minor TZ-66 (PEEK)	TE55M001
	1	Turbine Shaft	TE911K
	1	Ball Race	TE126-1
	1	Ball Race	TE126-1
	1	Ball Race	TE126-1
	1	Ball Race	TE126-1
	1	Hub Liner	TE624-11
	1	Split pin	TE448
	2	Ball Retainer with Balls	TE126S
	1	Main Collar Upper w. thread	TE127Z1
	1	Main Collar Lower w. thread	TE127Z2
	1	Horizontal Shaft	TE128Z

1.5

Service intervals

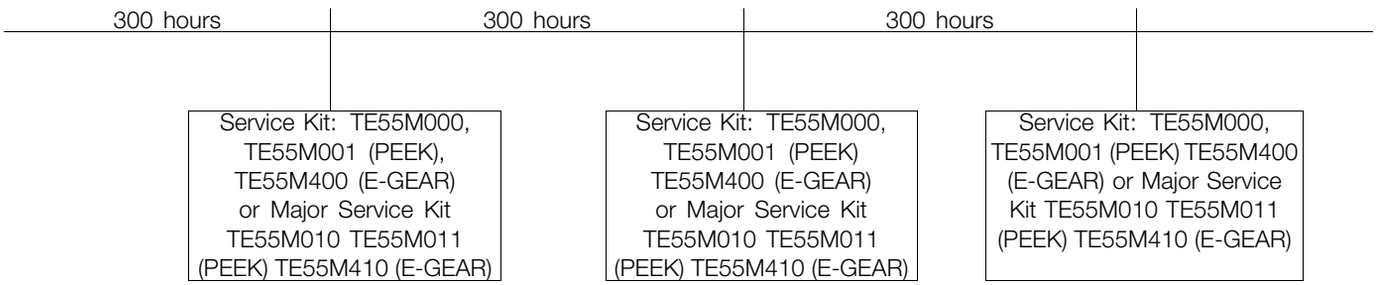

NOTE
The service intervals are recommended on the basis of pure liquids. When liquids contain particles and other kind of abrasives, we recommend shorter service intervals depending on the actual running conditions.

Pos	Qty	Denomination	Item no.
		Major service kit for TZ-66 (E-gear)	TE55M410
Consisting of:			
	1	Service Kit Minor TZ-66 (E-gear)	TE55M400
	1	Turbine Shaft	TE911K
	1	Ball Race	TE126-1
	1	Ball Race	TE126-1
	1	Ball Race	TE126-1
	1	Ball Race	TE126-1
	1	Hub Liner	TE624-11
	1	Split pin	TE448
	2	Ball Retainer with Balls	TE126S
	1	Main Collar Upper w. thread	TE127Z1
	1	Main Collar Lower w. thread	TE127Z2
	1	Hub Collar	TE127-3
	1	Horizontal Shaft E-gear	TE128E

Tools

1.5

TE81B031: Pusher for Gear frame

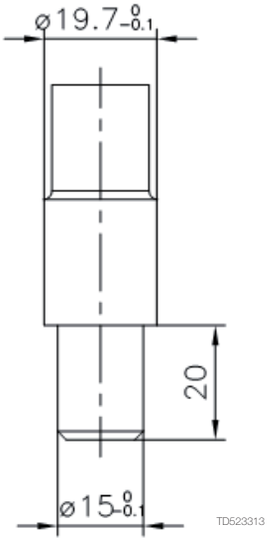

TE81B032: Fixture set f. Gear frame

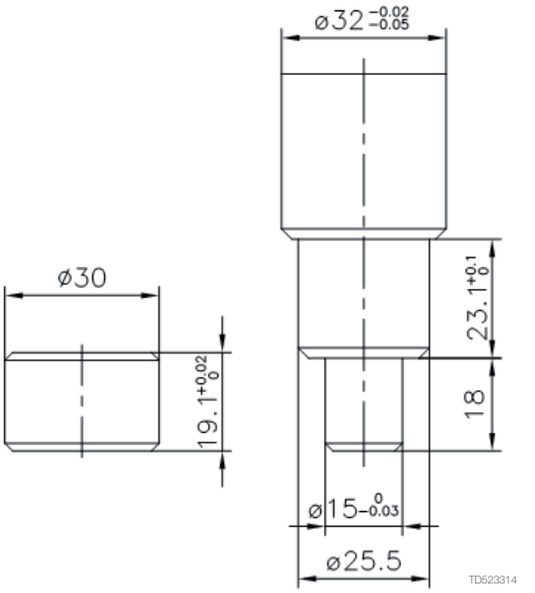

A: TE81B131 Tool for upper collar (2" TCM) compl. - B: TE81B132 Tool for lower collar (2"+ 3" TCM) compl.

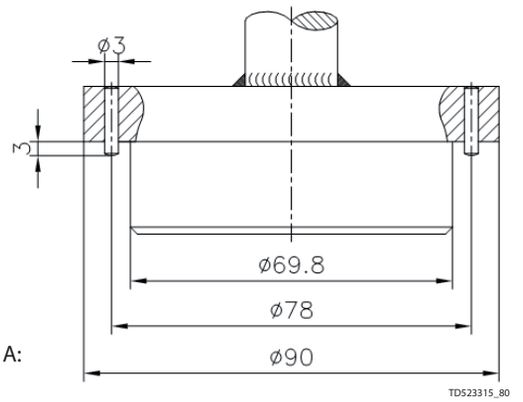

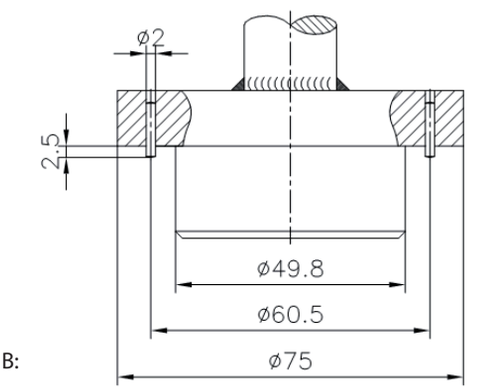

Pos	Qty	Denomination	Item no.
Tools			
		Standard tool kit	TE81B075
Consisting of:			
	1	Hex key	TE134
	1	Hex screwdriver	TE134A
	1	Hex key	TE135
	1	Hex screwdriver	TE135A
	1	Open-end spanner	TE462

Pos	Qty	Denomination	Item no.
Tools - available on request:			
		Pusher for Gear frame	TE81B031
		Fixture set f. Gear frame	TE81B032
		Tool for upper collar (2" TCM) compl.	TE81B131
		Tool for lower collar (2"+ 3" TCM) compl.	TE81B132

1.5

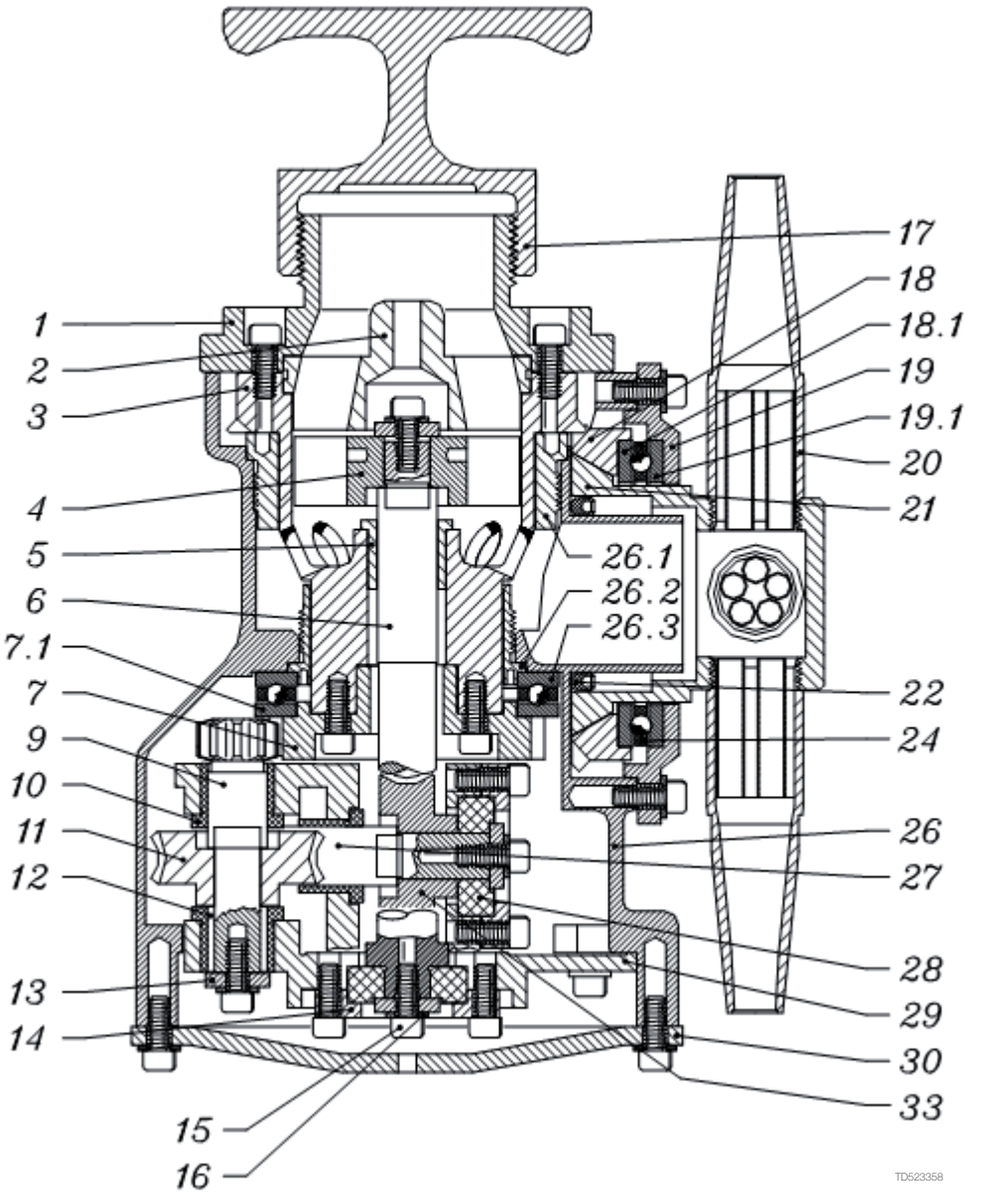
17
18
18.1
19
19.1
20
21
1
2
3
4
5
6
7.1
7
9
10
11
12
13
14
15
16
26.1
26.2
26.3
22
24
26
27
28
29
30
33
TD523358

Pos		Qty	Denomination	Item no.	Material	Remarks
1	□	1	Nipple, 1½" BSP	TE21B500	Stainless steel	Spare part
	□	1	Nipple, 1½" NPT	TE21B501	Stainless steel	Spare part
2	□	1	Guide, 100%	TE703	Stainless steel	Spare part
	□	1	Guide ring, 0%	TE8030	Stainless steel	Spare part
3		1	Stem	TE21B526	Stainless steel	Spare part
4		1	Impeller, 100%	TE705	Stainless steel	Spare part
5	▲✧	1	Main bush	TE21A525	Polymer	Wear part
6	▲	1	Turbine shaft	TE411K	Stainless steel	Wear part
7		1	Gear wheel w. ball race	TE71213	Stainless steel	Spare part
7.1	▲	1	Ball race	TE8261	Stainless steel	Wear part
9		1	Pinion	TE814	Stainless steel	Spare part
10	▲✧	3	Collar bush	TE21A585	Polymer	Wear part
11	▲✧	1	Worm wheel w. reinforcem.	TE21A367	Polymer	Wear part
12		1	Journal	TE817	Stainless steel	Spare part
13		4	Washer	TE719A	Stainless steel	Spare part
14		2	Bearing cover	TE731	Stainless steel	Spare part
15		38	Screw	TE118	Stainless steel	Spare part
16		18	Spring washer	TE156	Stainless steel	Spare part
17		1	Handle, 1½" BSP	TE801A	Polymer	Spare part
18		1	Bevel gear w. ball race	TE722S	Stainless steel	Spare part
18.1	▲	1	Ball race	TE8261	Stainless steel	Wear part
19		1	Hub cover w. ball race	TE21B340	Stainless steel	Spare part
19.1	▲	1	Ball race	TE8261	Stainless steel	Wear part
20	□	4	Nozzle, ø6 mm	TE50A006	Stainless steel	Spare part
	□	4	Nozzle, ø7 mm	TE50A007	Stainless steel	Spare part
	□	4	Nozzle, ø8 mm	TE50A008	Stainless steel	Spare part
	□	2	Nozzle, ø10 mm	TE50A010	Stainless steel	Spare part
20.1		2	Plug	TE50A000	Stainless steel	Spare part
21		1	Hub	TE21C536	Stainless steel	Spare part
22	▲✧	1	Lip seal	TE21B549	Elastomer	Wear part
24	▲	2	Ball retainer w. balls	TE21A380	Polymer/Stainless steel	Wear part
26		1	Body , [1)]		Stainless steel	N/A
26.1	▲	1	Main collar upper	TE21B520	Polymer	Wear part
26.2	▲	1	Main collar lower	TE21B521	Polymer	Wear part
26.3	▲	1	Ball race	TE8261	Stainless steel	Wear part
27	▲	1	Horizontal shaft	TE828Z	Stainless steel	Wear part
28	▲✧	2	Slide bearing	TE21A570	Polymer	Wear part
29		1	Gear frame	TE730	Stainless steel	Spare part
30		1	Bottom cover	TE7335	Stainless steel	Spare part
33	▲✧	1	Worm wheel w. reinforcem.	TE21A367	Polymer	Wear part

		Item no.
Service kits		
✧	**MINOR service kit**	**TE55H000**
▲	**MAJOR service kit**	**TE55H010**

[1)]: Position 26 is not sold as single spare part component but only as part of a machine maintenance/repair order. For further information please contact Alfa Laval Customer Support.

□ Configuration according to delivery note/order.
Please note that some of the polymer parts are in PEEK, which is not resistant to concentrated sulfuric acid.

Parts marked with ✧ are included in the Minor service kit: TE55H000
Parts marked with ▲ are included in the Major service kit: TE55H010

The machine can be delivered with ATEX/IECEx certification.

1.5

Service intervals

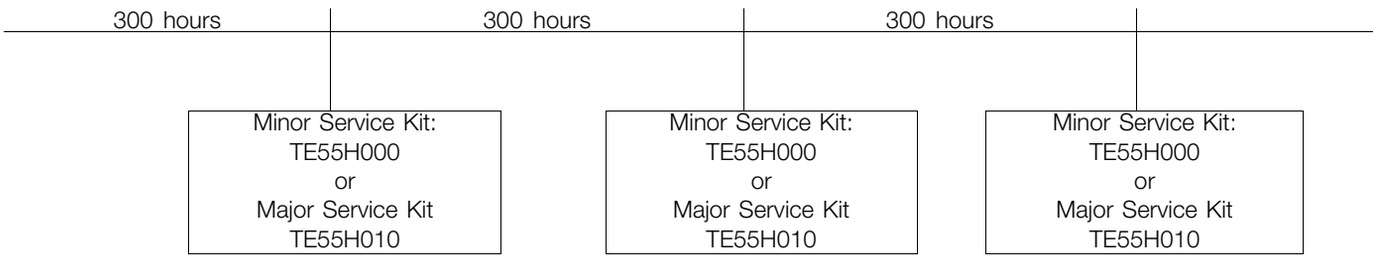

NOTE
The service intervals are recommended on the basis of pure liquids. When liquids contain particles and other kind of abrasives, we recommend shorter service intervals depending on the actual running conditions.

Pos	Qty	Denomination	Item no.
Minor Service Kit			
		Minor Service Kit	TE55H000
Consisting of:			
	1	Main bush, PEEK	TE21A525
	3	Collar bush, PEEK	TE21A585
	2	Worm wheel w. steel core, PEEK	TE21A367
	1	Lip seal	TE21B549
	2	Slide bearing, PEEK	TE21A570
	3	Locking wire	TE651

Pos	Qty	Denomination	Item no.
Major Service Kit			
		Major Service Kit	TE55H010
Consisting of:			
	1	Service Kit Minor	TE55H000
	1	Turbine shaft	TE411K
	1	Ball race	TE826-1
	1	Ball race	TE826-1
	1	Ball race	TE826-1
	1	Ball race	TE826-1
	2	Ball retainer with balls	TE21A380
	1	Split pin	TE448
	1	Main collar upper	TE21B520
	1	Main collar lower	TE21B521
	1	Horizontal shaft	TE828Z

1.5

Tools for replacement of Collars bush

TE81B033: Pusher for 1½" Collar bush

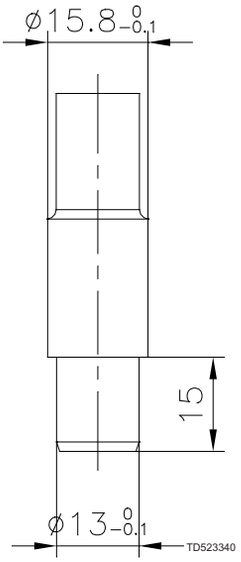

TE81B034: Fixture set f. Collar bush

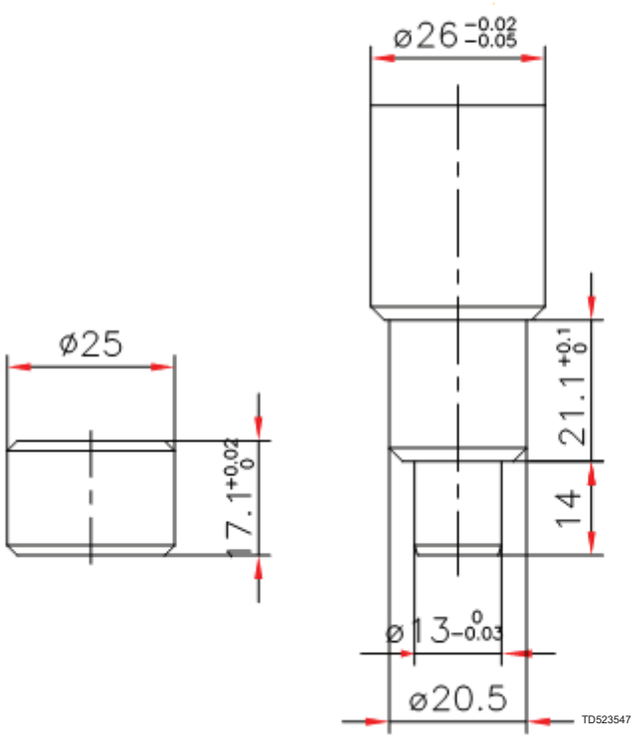

Sketch of tools for replacement of Main collars

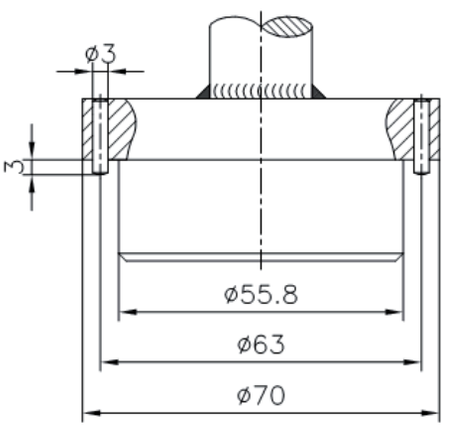

TE81B129: Tool for upper collar

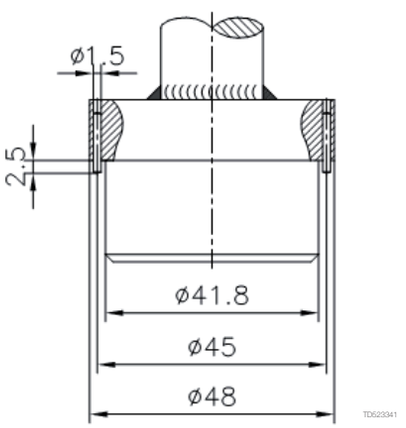

TE81B130: Tool for lower collar

Pos	Qty	Denomination	Item no.
		Standard Tool Kit	TE81B050
Consisting of:			
	1	Hex Key for Screw	TE134
	2	Hex Screwdriver for Screw	TE134A

Pos	Qty	Denomination	Item no.
Tools - available on request:			
		Pusher for 1½" Collar bush	TE81B033
		Fixture set f. Collar bush	TE81B034
		Tool for Upper collar (1½" TCM)	TE81B129
		Tool for Lower collar (1½" TCM)	TE81B130

1.5

Service kits - previous versions

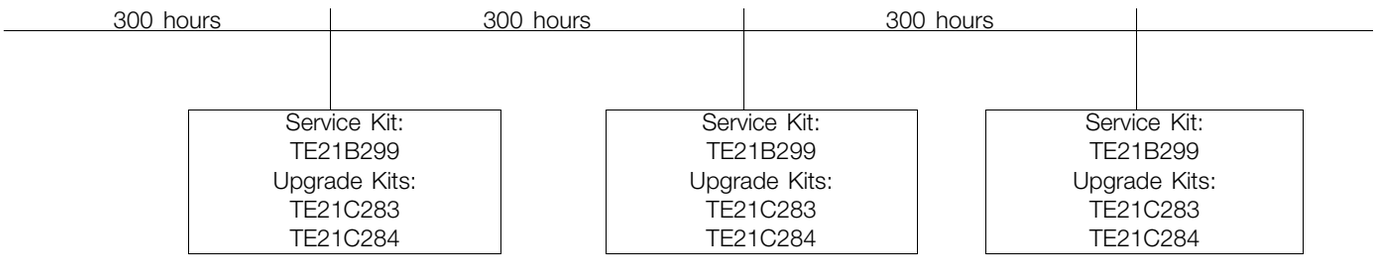

Pos	Qty	Denomination	Item no.
		Service Kit for Toftejorg TZ-67 - For machines delivered before October 1, 1993	TE21B299
Consisting of:			
-	2	Worm wheel w. reinforcement	TE21A367
	2	Slide bearing	TE21A570
	3	Collar bush	TE21A585
	1	Main bush	TE21B375

Pos	Qty	Denomination	Item no.
		Upgrade Kit for Toftejorg TZ-67 - For machines delivered January 1, 1986 - June 30, 1993	TE21C283
Consisting of:			
-	1	Stem, complete	TE21B328
-	1	4 Nozzle hub	TE21C536
	1	Lip seal	TE21B549
	1	Main bush	TE21A525
	2	Slide bearing	TE21A570
	2	Worm wheel	TE21A367
	1	Turbine shaft	TE411K
	4	Ball race	TE8261
	2	Ball retainer w. balls	TE21A380
	3	Collar bush	TE21A585
	1	Horizontal shaft	TE828Z

Pos	Qty	Denomination	Part No.
		Upgrade Kit for Toftejorg TZ-67 - For machines delivered after July 1, 1993	TE21C284
Consisting of:			
-	1	Main bush	TE21A525
-	2	Slide bearing	TE21A570
	2	Worm wheel	TE21A367
	1	Turbine shaft	TE411K
	4	Ball race	TE8261
	2	Ball retainer w. balls	TE21A380
	3	Collar bush	TE21A585
	1	Horizontal shaft	TE828Z
	1	Lip seal	TE21B549

Not manufactured anymore

1.5

Cross sectional drawing, Toftejorg TZ-74

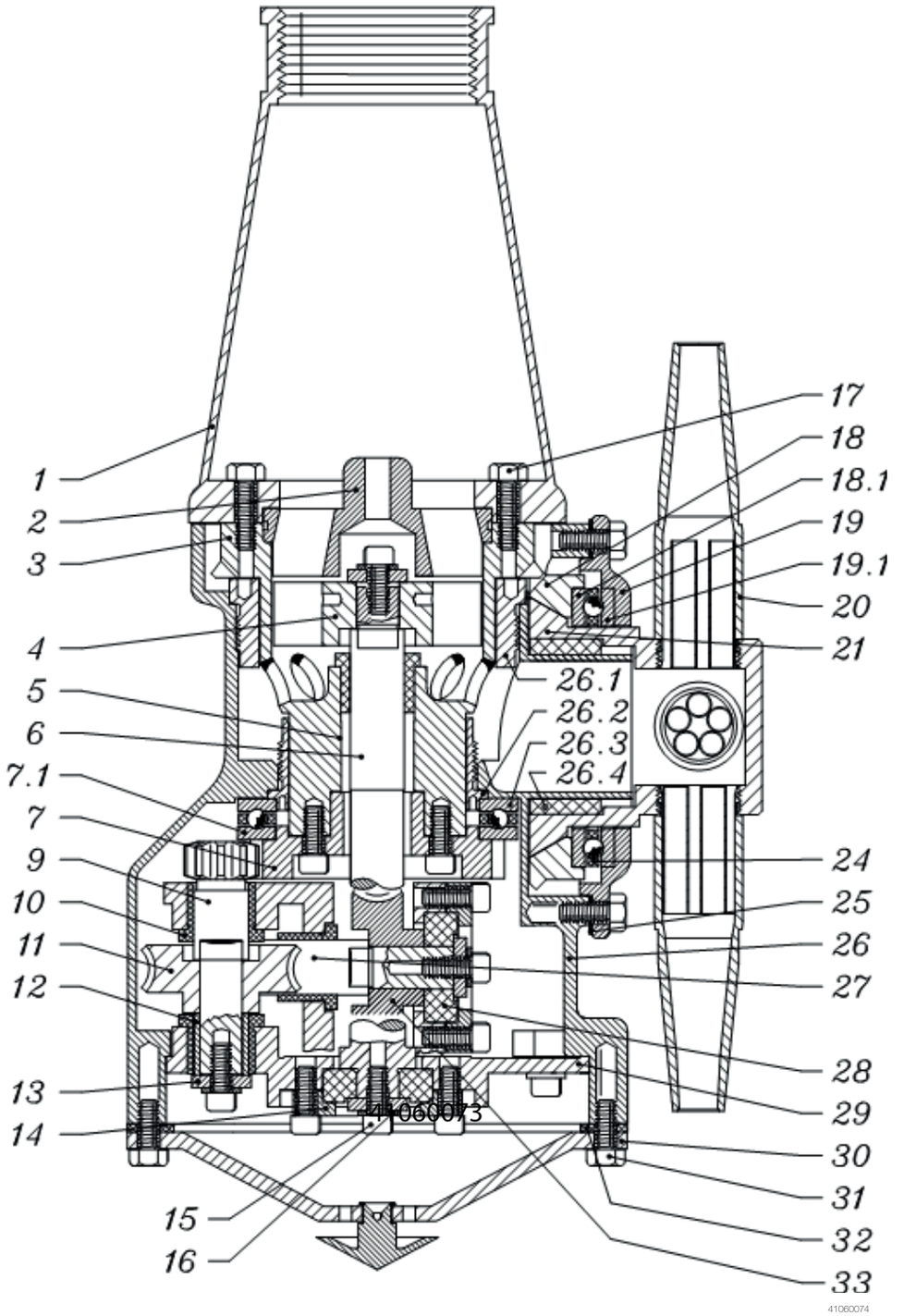

Pos	Qty	Denomination	Item no.	Material	Remarks
1 □	1	Top Cone, 1½" BSP	TE21D500	Stainless steel	Spare part
□	1	Top Cone, 1½" NPT	TE21D501	Stainless steel	Spare part
□	1	Top Cone, 2" NPT	TE21D511	Stainless steel	Spare part
2 □	1	Guide, 100%	TE703	Stainless steel	Spare part
□	1	Guide ring, 0%	TE8030	Stainless steel	Spare part
3	1	Stem	TE21B526	Stainless steel	Spare part
4	1	Impeller, 100%	TE705	Stainless steel	Spare part
5 ◆✧	1	Main bush	TE21A525	Polymer	Wear part
6 ✧	1	Turbine shaft	TE411K	Stainless steel	Wear part
7	1	Gear wheel w. ball race	TE71213	Stainless steel	Spare part
7.1 ✧	1	Ball race	TE8261	Stainless steel	Wear part
9	1	Pinion	TE814	Stainless steel	Spare part
10 ◆✧	3	Collar bush	TE21A585	Polymer	Wear part
11 ◆✧	1	Worm wheel w. reinforcem.	TE21A367	Polymer	Wear part
12	1	Journal	TE817	Stainless steel	Spare part
13	4	Washer	TE719A	Stainless steel	Spare part
14	2	Bearing cover	TE731	Stainless steel	Spare part
15	22	Screw	TE118	Stainless steel	Spare part
16	8	Spring washer	TE156	Stainless steel	Spare part
17	6	Hex Screw	TE402H	Stainless steel	Spare part
18	1	Bevel gear w. ball race	TE722S	Stainless steel	Spare part
18.1✧	1	Ball race	TE8261	Stainless steel	Wear part
19	1	Hub cover w. ball race	TE21D340	Stainless steel	Spare part
19.1✧	1	Ball race	TE8261	Stainless steel	Wear part
20 □	4	Nozzle, ø6 mm	TE50A006	Stainless steel	Spare part
□	4	Nozzle, ø7 mm	TE50A007	Stainless steel	Spare part
□	4	Nozzle, ø8 mm	TE50A008	Stainless steel	Spare part
□	2	Nozzle, ø10 mm	TE50A010	Stainless steel	Spare part
20.1	2	Plug	TE50A000	Stainless steel	Spare part
21	1	Hub	TE21C536	Stainless steel	Spare part
24 ✧	2	Ball retainer w. balls	TE21A380	Polymer/Stainless steel	Spare part
25	1	Hub gasket	TE21D562	Polymer/elastomer	Spare part
26	1	Body	TE727Z4	Stainless steel	Not available
26.1	1	Main collar upper	TE21B520	Polymer	Wear part
26.2	1	Main collar lower	TE21B521	Polymer	Wear part
26.3✧	1	Ball race	TE8261	Stainless steel	Wear part
26.4✧	1	Hub collar	TE21D522	Polymer	Wear part
27 ✧	1	Horizontal shaft	TE828Z	Stainless steel	Wear part
28 ◆✧	2	Slide bearing	TE21A570	Polymer	Wear part
29	1	Gear frame	TE730	Stainless steel	Spare part
30	1	Bottom cover compl.	TE21D350	Stainless steel	Spare part
31	10	Hex Screw	TE421H	Stainless steel	Spare part
32	1	Bottom gasket	TE21D563	Polymer/elastomer	Spare part
33 ◆✧	1	Worm wheel w. reinforcem.	TE21A367	Polymer	Wear part

Service kits

Minor service kit	TE21D299
Major service kit	TE21D286

Parts marked with ◆ are included in the Minor Service Kit standard: TE21D299
Parts marked with ✧ are included in the Major Service Kit standard: TE21D286

The machine can be delivered with ATEX certification.

□ Configuration according to delivery note/order.
*Note: Position 26 is not sold as single spare part component. Only sold as part of a machine maintenance/repair order. For further information please contact Alfa Laval Customer Support.

Not manufactured anymore

1.5

Cross sectional drawing, Toftejorg TZ-74 Brew Kettle

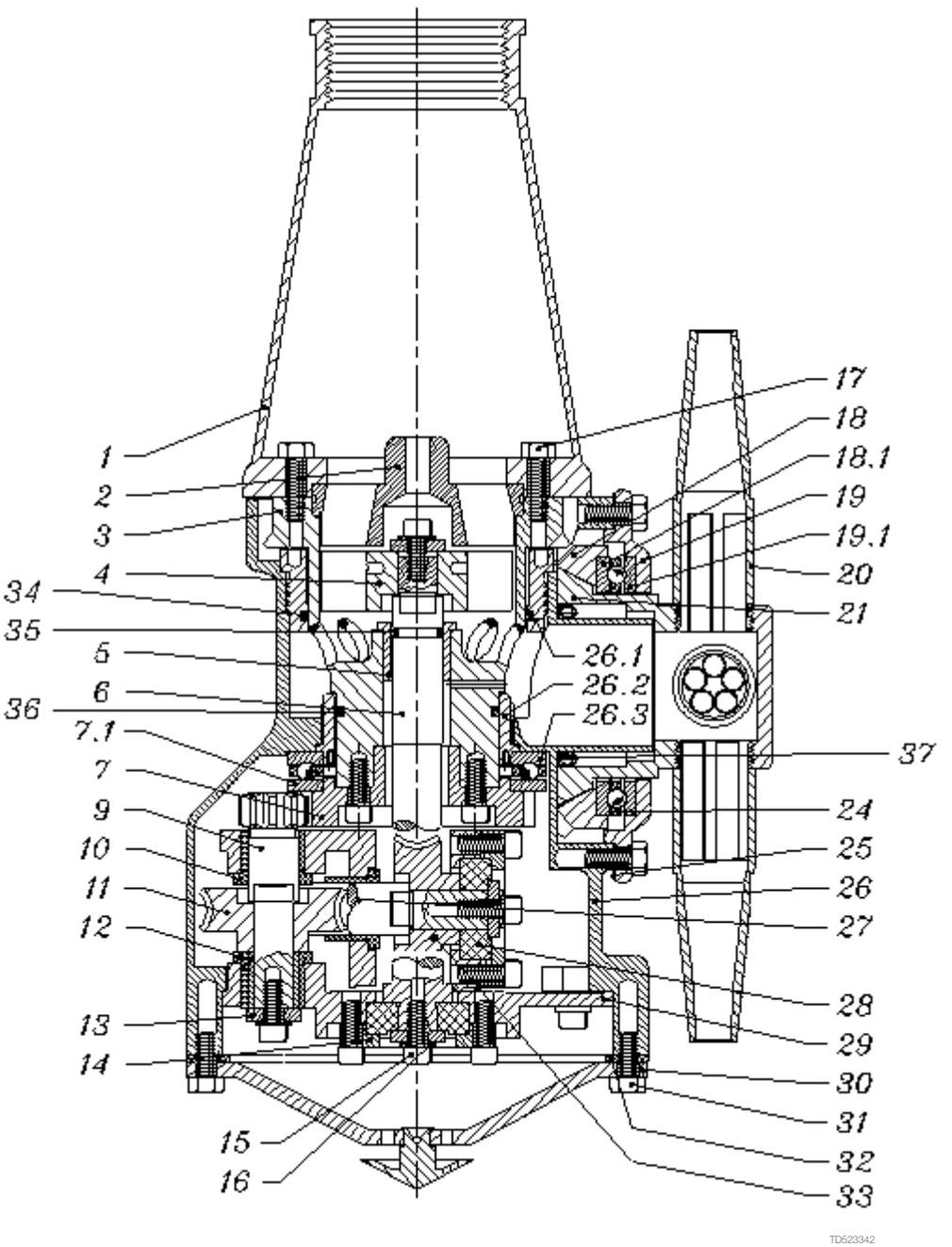

Reference List of Parts, Alfa Laval Toftejorg TZ-74 Brew Kettle

Pos		Qty	Denomination	Item no.	Material	Remark
1	□	1	Top Cone, 1½" BSP	TE21D500	Stainless steel	Spare part
	□	1	Top Cone, 1½" NPT	TE21D501	Stainless steel	Spare part
	□	1	Top Cone, 2" NPT	TE21D514	Stainless steel	Spare part
2	□	1	Guide 100%	TE703	Stainless steel	Spare part
	□	1	Guide ring 0%	TE8030	Stainless steel	Spare part
3		1	Stem	TE21D557	Stainless steel	Spare part
4		1	Impeller	TE705	Stainless steel	Spare part
5	◆	1	Main bush	TE21A525	Polymer	Wear part
6		1	Turbine shaft	TE21F503	Stainless steel	Wear part
7		1	Gear wheel w. ball race	TE71213	Stainless steel	Spare part
7.1		1	Ball race	TE8261	Stainless steel	Wear part
9		1	Pinion	TE814	Stainless steel	Spare part
10	◆	3	Collar bush	TE21A585	Polymer	Wear part
11	◆	1	Wormwheel w. reinforcem.	TE21A367	Polymer	Wear part
12		1	Journal	TE817	Stainless steel	Spare part
13		4	Washer	TE719A	Stainless steel	Spare part
14		2	Bearing cover	TE731	Stainless steel	Spare part
15		22	Screw	TE118	Stainless steel	Spare part
16		8	Spring washer	TE156	Stainless steel	Spare part
17		6	Screw	TE402H	Stainless steel	Spare part
18		1	Bevel gear w. ball race	TE722S	Stainless steel	Spare part
18.1		1	Ball race	TE8261	Stainless steel	Wear part
19		1	Hub cover w. ball race	TE21D340	Stainless steel	Spare part
19.1		1	Ball race	TE8261	Stainless steel	Wear part
20	□	4	Nozzle, ø6 mm	TE50A006	Stainless steel	Spare part
	□	4	Nozzle, ø7 mm	TE50A007	Stainless steel	Spare part
	□	4	Nozzle, ø8 mm	TE50A008	Stainless steel	Spare part
21		1	Hub	TE21C536	Stainless steel	Spare part
24		2	Ball retainer w. balls	TE21A380	Polymer/Stainless steel	Spare part
25		1	Hub gasket	TE21D562	Polymer	Spare part
26		1	Body		Stainless steel	*Note
26.1		1	Main collar upper	TE21D558	Polymer	Wear part
26.2		1	Main collar lower	TE21B521	Polymer	Wear part
26.3		1	Ball race	TE8261	Stainless steel	Wear part
27		1	Horizontal shaft	TE828Z	Stainless steel	Wear part
28	◆	2	Slide bearing	TE21A570	Polymer	Wear part
29		1	Gear frame	TE730	Stainless steel	Spare part
30		1	Bottom cover compl.	TE21D350	Stainless steel	Spare part
31		10	Screw	TE421H	Stainless steel	Spare part
32		1	Bottom gasket	TE21D563	Modified polymer, elastomer	Spare part
33	◆	1	Wormwheel w. reinforcem.	TE21A367	Polymer	Wear part
34	◆	1	O-ring	TE807	Elastomer	Wear part
35	◆	1	O-ring	TE810	Elastomer	Wear part
36	◆	1	O-ring	TE825	Elastomer	Wear part
37	◆	1	Lip seal	TE21B549	Elastomer	Wear part

Service kits

Service kit	TE21D297	

Parts marked with ◆ are included in the Service Kit: TE21D297

The machine can be delivered with ATEX certification.

□ Configuration according to delivery note/order.

*Note: Position 26 is not sold as single spare part component. Only sold as part of a machine maintenance/repair order. For further information please contact Alfa Laval Customer Support.

Not manufactured anymore

1.5

Cross sectional drawing, Toftejorg TZ-74 self cleaning

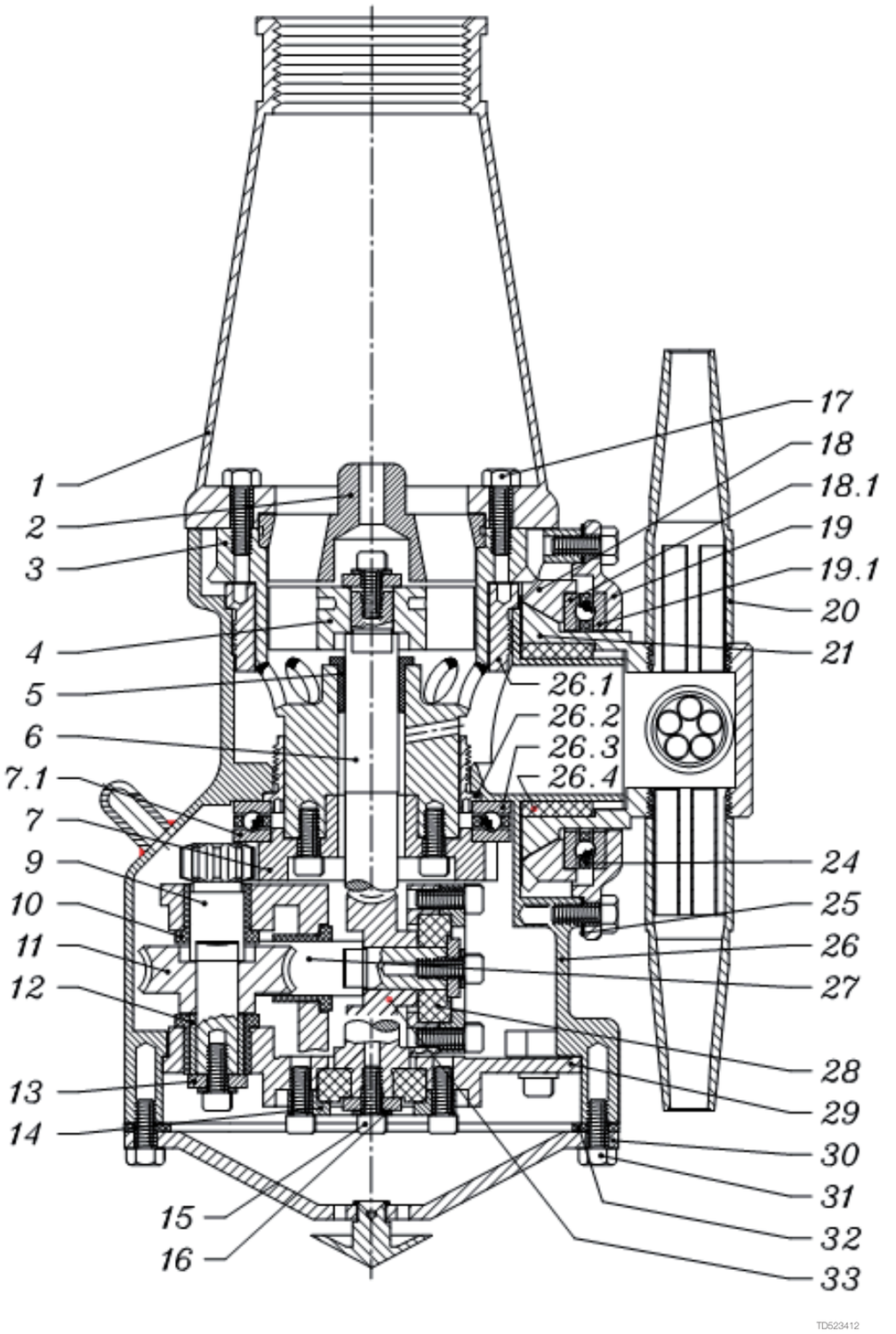

Reference List of Parts,
Alfa Laval Toftejorg TZ-74 Self Cleaning Version

Pos		Qty	Denomination	Item no..	Material	Remarks
1	□	1	Top Cone, 1½" BSP	TE21D500	Stainless steel	Spare part
	□	1	Top Cone, 1½" NPT	TE21D501	Stainless steel	Spare part
	□	1	Top Cone, 2" NPT	TE21D514	Stainless steel	Spare part
2	□	1	Guide 100%	TE703	Stainless steel	Spare part
	□	1	Guide ring 0%	TE8030	Stainless steel	Spare part
3		1	Stem f. Toftej.TZ-74 self-clean	TE21D561	Stainless steel	Spare part
4		1	Impeller 100%	TE705	Stainless steel	Spare part
5	◆✧	1	Main bush	TE21A525	Polymer	Wear part
6	✧	1	Turbine shaft	TE411K	Stainless steel	Wear part
7		1	Gear wheel w. ball race	TE71213	Stainless steel	Spare part
7.1	✧	1	Ball race	TE8261	Stainless steel	Wear part
9		1	Pinion	TE814	Stainless steel	Spare part
10	◆✧	3	Collar bush	TE21A585	Polymer	Wear part
11	◆✧	1	Worm wheel w. reinforcem.	TE21A367	Polymer	Wear part
12		1	Journal	TE817	Stainless steel	Spare part
13		4	Washer	TE719A	Stainless steel	Spare part
14		2	Bearing cover	TE731	Stainless steel	Spare part
15		22	Screw	TE118	Stainless steel	Spare part
16		8	Spring washer	TE156	Stainless steel	Spare part
17		6	Hex Screw	TE402H	Stainless steel	Spare part
18		1	Bevel gear w. ball race	TE722S	Stainless steel	Spare part
18.1	✧	1	Ball race	TE8261	Stainless steel	Wear part
19		1	Hub cover w. ball race	TE21D340	Stainless steel	Spare part
19.1	✧	1	Ball race	TE8261	Stainless steel	Wear part
20	□	4	Nozzle, ø6 mm	TE50A006	Stainless steel	Spare part
	□	4	Nozzle, ø7 mm	TE50A007	Stainless steel	Spare part
	□	4	Nozzle, ø8 mm	TE50A008	Stainless steel	Spare part
	□	2	Nozzle, ø10 mm	TE50A010	Stainless steel	Spare part
20.1		2	Plug	TE50A000	Stainless steel	Spare part
21		1	Hub	TE21C536	Stainless steel	Spare part
24	✧	2	Ball retainer w. balls	TE21A380	Polymer/Stainless steel	Spare part
25		1	Hub gasket	TE21D562	Polym./elastom.	Spare part
26		1	Body w. clean nozzle		Stainless steel	*Note
26.1		1	Main collar upper	TE21B520	Polymer	Wear part
26.2		1	Main collar lower	TE21B521	Polymer	Wear part
26.3	✧	1	Ball race	TE8261	Stainless steel	Wear part
26.4	✧	1	Hub collar	TE21D522	Polymer	Wear part
27	✧	1	Horizontal shaft	TE828Z	Stainless steel	Wear part
28	◆✧	2	Slide bearing	TE21A570	Polymer	Wear part
29		1	Gear frame	TE730	Stainless steel	Spare part
30		1	Bottom cover compl.	TE21D350	Stainless steel	Spare part
31		10	Hex Screw	TE421H	Stainless steel	Spare part
32		1	Bottom gasket	TE21D563	Polym./elastom.	Spare part
33	◆✧	1	Worm wheel w. reinforcem.	TE21A367	Polymer	Wear part

Service kits

Minor service kit	TE21D299
Major service kit	TE21D286

Parts marked with ◆ are included in the Minor Service Kit standard: TE21D299
Parts marked with ✧ are included in the Major Service Kit standard: TE21D286

The machine can be delivered with ATEX certification.

□ Configuration according to delivery note/order.
*Note: Position 26 is not sold as single Spare part component. Only sold as part of a machine maintenance/repair order. For further information please contact Alfa Laval Customer Support.

Not manufactured anymore

1.5

Top assembly

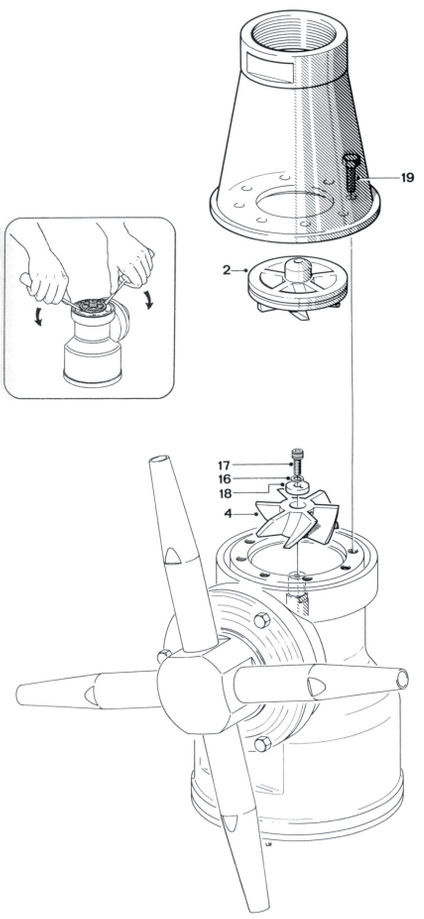

Bottom assembly

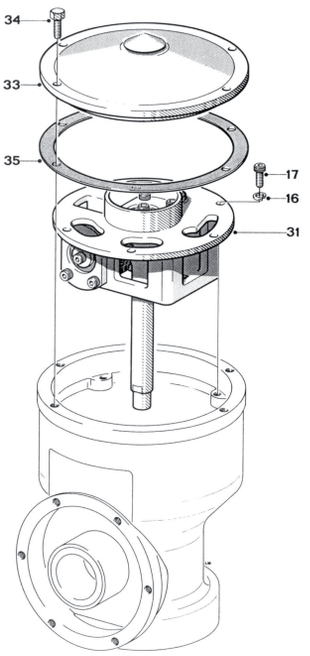

Stem subassembly

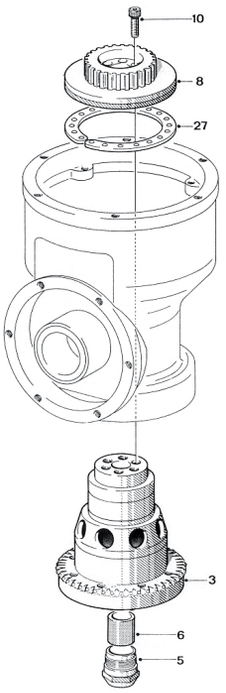

Hub subassembly

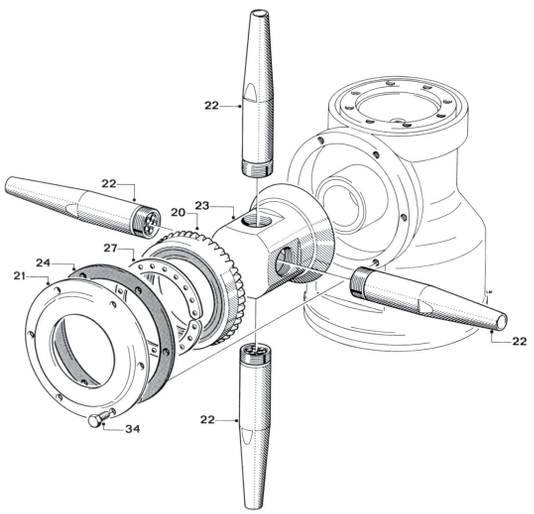

Gear subassembly

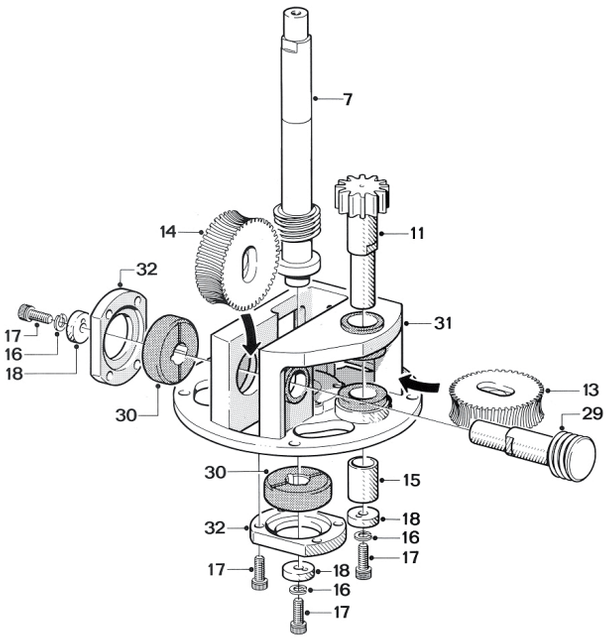

Pos		Qty	Denomination	Item no.	Material	Remarks
1	□	1	Top cone 2"" BSP	TE22D500	Stainless steel	Spare part
	□	1	Top cone 2"" NPT	TE22D501	Stainless steel	Spare part
2	□	1	Guide 100%	TE603	Stainless steel	Spare part
	□	1	Guide 0%	TE1030	Stainless steel	Spare part
3		1	Stem w. liners	TE604Z	Stainless steel/polymer	Spare part
3.1		(1)	Top liner	TE9041*	Polymer	Wear part
3.2		(1)	Bottom liner	TEB6042*	Polymer	Wear part
4		1	Impeller 100%	TE605	Stainless steel	Spare part
5		1	Gland	TE608Z	Stainless steel	Spare part
6	□	1	Main bush	TE609P	Polymer	Wear part
	□	1	Main bush	TE22B575	Polymer	Wear part
7		1	Turbine shaft	TE911K	Stainless steel	Wear part
8		1	Gear wheel w. ball race	TE51213	Stainless steel	Spare part
8.1		(1)	Ball race	TE1261	Stainless steel	Wear part
10		6	Screw	TE120	Stainless steel	Spare part
11		1	Pinion	TE114	Stainless steel	Spare part
12	□	3	Collar bush	TE615K	Carbon	Wear part
	□	3	Collar bush	TE22A585	Polymer	Wear part
13	□	1	Worm wheel w. reinforcem.	TE22A360	Polymer/Stainless steel	Wear part
	□	1	Worm wheel w. reinforcem.	TE22A365	Polymer	Wear part
14	□	1	Worm wheel w. reinforcem.	TE22A360	Polymer/Stainless steel	Wear part
	□	1	Worm wheel w. reinforcem.	TE22A365	Polymer	Wear part
15		1	Journal	TE117	Stainless steel	Spare part
16		9	Spring washer	TE156	Stainless steel	Spare part
17		17	Screw	TE118	Stainless steel	Spare part
18		4	Washer	TE619A	Stainless steel	Spare part
19		8	Screw	TE902H	Stainless steel	Spare part
20		1	Bevel gear w. ball race	TE622S	Stainless steel	Spare part
20.1		(1)	Ball race	TE1261	Stainless steel	Wear part
21		1	Hub cover w. ball race	TE22D340	Stainless steel	Spare part
21.1		(1)	Ball race	TE1261	Stainless steel	Wear part
22	□	4	Nozzle, ø8	TE50B008	Stainless steel	Spare part
	□	4	Nozzle, ø9	TE50B009	Stainless steel	Spare part
	□	4	Nozzle, ø10	TE50B010	Stainless steel	Spare part
	□	4	Nozzle, ø11	TE50B011	Stainless steel	Spare part
22.1		2	Plug	TE50B000	Stainless steel	Spare part
23		1	Hub w. liner	TE6244KZ	Stainless steel	Spare part
23.1		(1)	Hub liner	TE62411*	Polymer	Wear part
24		1	Hub gasket	TE22D553	Modified polymer, elastomer	Spare part
27		2	Ball retainer w. balls	TE126S	Polymer/Stainless steel	Wear part
28		1	Body with bearings		Stainless steel	**Note
28.1		(1)	Main collar upper	TE127Z1	Stainless steel	Wear part
28.2		(1)	Main collar lower	TE127Z2	Stainless steel	Wear part
28.3		(1)	Ball race	TE1261	Stainless steel	Wear part
28.4		(1)	Hub collar	TE1273	Stainless steel	Wear part
29		1	Horizontal shaft	TE128Z	Stainless steel	Wear part
30	□	2	Slide bearing	TE929K	Carbon	Wear part
	□	2	Slide bearing	TE22A570	Polymer	Wear part
31		1	Gear frame w. bushes	TE630R	Stainless steel/carbon	Spare part
32		2	Bearing cover	TE531	Stainless steel	Spare part
33		1	Bottom cover, compl.	TE22D350	Stainless steel	Spare part
34		12	Screw	TE421H	Stainless steel	Spare part
35		1	Bottom gasket	TE22D554	Modified polymer, elastomer	Spare part

□ Configuration according to delivery note/order. Please note that some of the polymer parts are in PEEK. PEEK is not resistant to concentrated sulfuric acid.

* If blue liners on Stem are extremely worn, they can be replaced. This part requires that a precise procedure is followed to accomplish installation. It is highly recommended that an authorized Alfa Laval Tank Equipment Service Center perform the replacement when necessary.

**Note: Pos. 28 is not sold as single Spare part component but only as part of a machine maintenance/repair order. For further information please contact Alfa Laval Customer Support.

Service intervals

300 hour	300 hour	300 hour	

1.5

Service Kit: TE55M000, TE55M001 (PEEK), TE55M400 (E-GEAR) or Major Service Kit TE55M010, TE55M011 (PEEK), TE55M410 (E-GEAR)	Service Kit: TE55M000, TE55M001 (PEEK), TE55M400 (E-GEAR) or Major Service Kit TE55M010, TE55M011 (PEEK), TE55M410 (E-GEAR)	Service Kit: TE55M000, TE55M001 (PEEK), TE55M400 (E-GEAR) or Major Service Kit TE55M010, TE55M011 (PEEK), TE55M410 (E-GEAR)

Pos	Qty	Denomination	Item no.
		Service Kit Minor for Toftejorg TZ-79	TE55M000
Consisting of:			
6	1	Main bush	TE609P
12	3	Collar bush	TE615K
13	1	Worm wheel w. reinforcement	TE22A360
14	1	Worm wheel w. reinforcement	TE22A360
	4	Locking Wire*	TE651
30	2	Slide bearing	TE929K

Pos	Qty	Denomination	Part No.
		Service Kit Minor for Toftejorg TZ-79 (PEEK)	TE55M001
Consisting of:			
6	1	Main bush	TE22B575
12	3	Collar bush	TE22A585
13	1	Worm wheel w. reinforcement	TE22A365
14	1	Worm wheel w. reinforcement	TE22A365
	4	Locking Wire*	TE651
30	2	Slide bearing	TE22A570

Pos	Qty	Denomination	Item no.
		Service Kit Minor for Toftejorg TZ-79 (E-gear)	TE55M400
Consisting of:			
6	1	Main bush	TE609P
12	3	Collar bush	TE615K
13	1	Worm wheel w. reinforcement	TE22A360
14	1	Worm wheel w. reinforcement, E-gear	TE22A564
	4	Locking Wire*	TE651
30	2	Slide bearing	TE929K

** Locking wire is only used in fixed version and can be disregarded*

Pos	Qty	Denomination	Item no.
		Service Kit Major for Toftejorg TZ-79	TE55M010
Consisting of:			
7	1	Turbine shaft	TE911K
8.1	1	Ball race	TE1261
20.1	1	Ball race	TE1261
21.1	1	Ball race	TE1261
23.1	1	Hub liner	TE62411*
-	1	Split pin	TE448
27	2	Ball retainer w balls.	TE126S
28.1	1	Main collar, upper	TE127Z1
28.2	1	Main collar, lower	TE127Z2
28.3	1	Ball race	TE1261
28.4	1	Hub collar	TE1273
29	1	Horizontal shaft	TE128Z
-	1	Service Kit Minor	TE55M000

Pos	Qty	Denomination	Part no.
		Service Kit Major for Toftejorg TZ-79 (PEEK)	TE55M011
Consisting of:			
7	1	Turbine shaft	TE911K
8.1	1	Ball race	TE1261
20.1	1	Ball race	TE1261
21.1	1	Ball race	TE1261
23.1	1	Hub liner	TE62411*
-	1	Split pin	TE448
27	2	Ball retainer w balls.	TE126S
28.1	1	Main collar, upper	TE127Z1
28.2	1	Main collar, lower	TE127Z2
28.3	1	Ball race	TE1261
29	1	Horizontal shaft	TE128Z
-	1	Service Kit Minor	TE55M001

Pos	Qty	Denomination	Item no.
		Service Kit Major for Toftejorg TZ-79 (E-gear)	TE55M410
Consisting of:			
7	1	Turbine shaft	TE911K
8.1	1	Ball race	TE1261
20.1	1	Ball race	TE1261
21.1	1	Ball race	TE1261
23.1	1	Hub liner	TE62411*
-	1	Split pin	TE448
27	2	Ball retainer w balls.	TE126S
28.1	1	Main collar, upper	TE127Z1
28.2	1	Main collar, lower	TE127Z2
28.3	1	Ball race	TE1261
28.4	1	Hub collar	TE1273
29	1	Horizontal shaft, E-gear	TE128E
-	1	Service Kit Minor	TE55M400

* If blue liners on Stem are extremely worn, they can be replaced. This part requires that a precise procedure is followed to accomplish installation. It is highly recommended that an authorized Alfa Laval Tank Equipment Service Center perform the replacement when necessary.

Pos	Qty	Denomination	Tool no.
		Standard tool kit	TE81B075
Consisting of:			
	1	Hex key	TE134
	1	Hex screwdriver	TE134A
	1	Hex key	TE135
	1	Hex screwdriver	TE135A
	1	Open-end spanner	TE462

Available on request:

Pusher for Gear frame	TE81B031
Fixture set f. Gear frame	TE81B032

1.5

TE81B031: Pusher for Gear frame

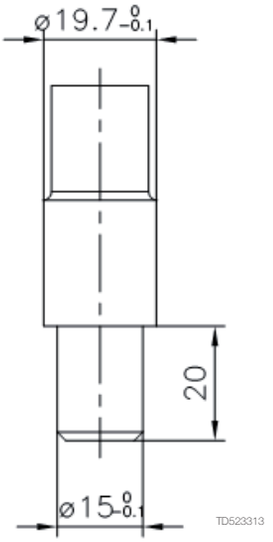

TE81B032: Fixture set f. Gear frame

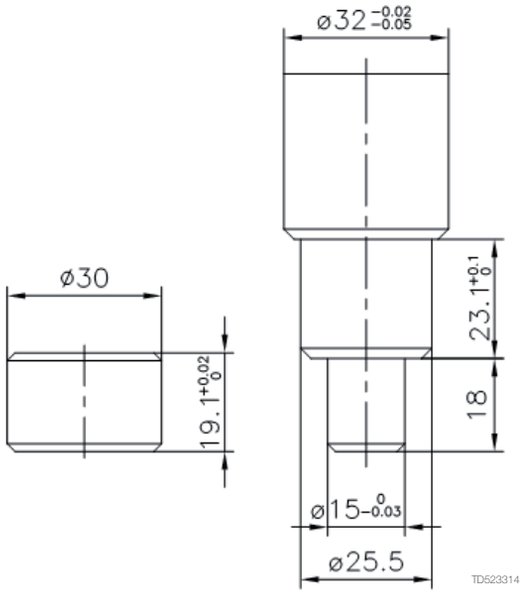

A: TE81B131 Tool for upper collar (2" TCM) compl.

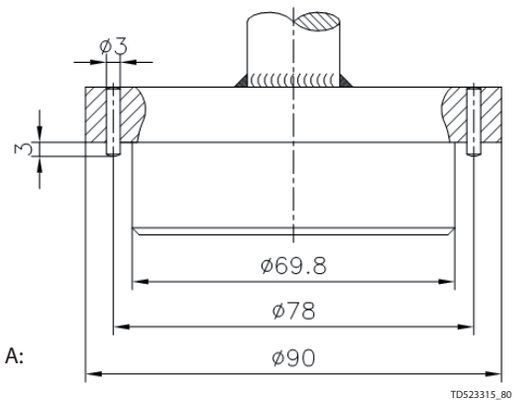

B: TE81B132 Tool for lower collar (2"+ 3" TCM) compl.

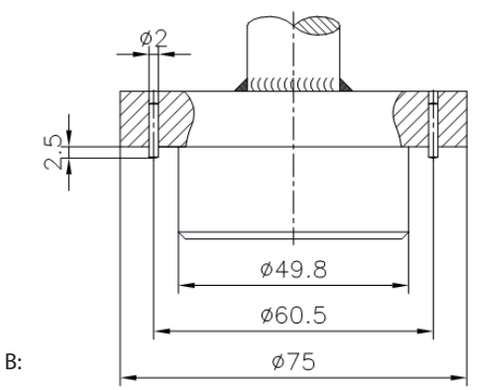

1.6 Rotary spray heads

Alfa Laval's comprehensive range of cleaning devices guarantees impact, making the most economical use of energy, manpower and cleaning solutions.



Spare parts

Toftejorg SaniMidget Retractor, pneumatic driven, complete 1.6.520
Toftejorg SaniMidget Retractor, pneumatic driven, cylinder 1.6.522
Toftejorg SaniMidget Retractor, pneumatic driven, spring return 1.6.524
Toftejorg SaniMidget Retractor, pneumatic driven, spring return, Cylinder . . 1.6.526
Toftejorg SaniMidget Retractor, media driven, complete 1.6.528
Toftejorg SaniMidget Retractor, media driven, cylinder 1.6.530
Toftejorg SaniMega 1.6.532
Toftejorg SaniMidget, SaniMagnum & SaniMega SB 1.6.534

Spare parts for obsolete products

LKSB Rotary Spray Ball 1.6.536

1.6

Cross Sectional Drawing
Toftejorg SaniMidget Retractor, Pneumatic Driven
Art. nos. TE75M100_132

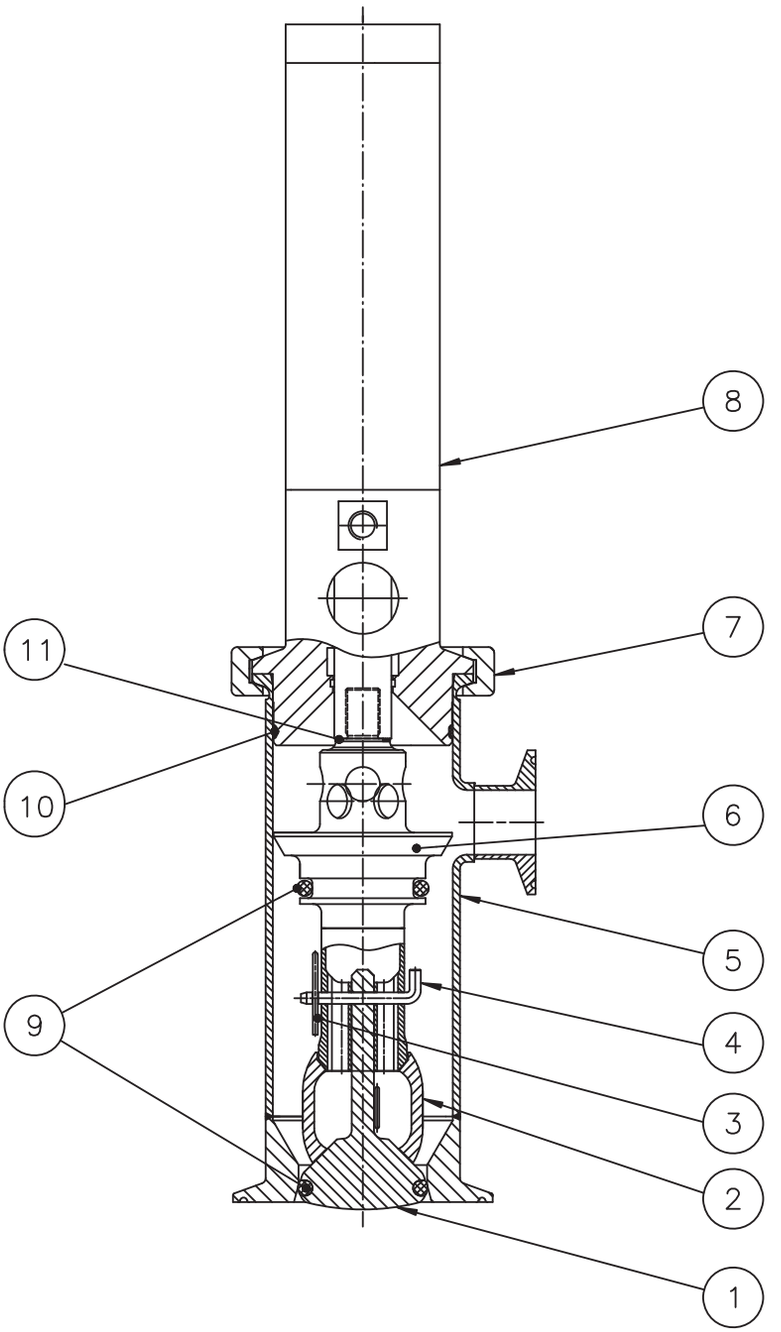

41010021

Parts list
Toftejorg SaniMidget Retractor, Pneumatic Driven, Complete

Pos		Qty	Denomination	Item no.	Material	Remark
1		1	Valve	TE75M502	Stainless steel	Spare part
2	♦○★	1	Cleaner head	TE75M533	Polymer	Wear part
3	♦○★	1	Spring pin	TE52D549	Stainless steel	Spare part
4	♦○★	1	Lock-pin	TE75M529	Stainless steel	Spare part
5		1	Front tube, complete		Stainless steel	*Note
6	□	1	Piston, complete, stroke length = 100	TE75M310	Assembly	Spare part
	□	1	Piston, complete, stroke length = 150	TE75M31015	Assembly	Spare part
	□	1	Piston, complete, stroke length = 250	TE75M31025	Assembly	Spare part
7		1	Clamp ring	TE51S126	Stainless steel	Spare part
8	□	1	Pneumatic cylinder, complete, stroke length = 100	TE75M302	Assembly, EPDM	Spare part
	□	1	Pneumatic cylinder, complete, stroke length = 150	TE75M30215	Assembly, EPDM	Spare part
	□	1	Pneumatic cylinder, complete, stroke length = 250	TE75M30225	Assembly, EPDM	Spare part
	□	1	Pneumatic cylinder, complete, stroke length = 100	TE75M302001	Assembly, FPM	Spare part
	□	1	Pneumatic cylinder, complete, stroke length = 150	TE75M302151	Assembly, FPM	Spare part
	□	1	Pneumatic cylinder, complete, stroke length = 250	TE75M302251	Assembly, FPM	Spare part
	□	1	Pneumatic cylinder, complete, stroke length = 100	TE75M302002	Assembly, perflour	Spare part
	□	1	Pneumatic cylinder, complete, stroke length = 150	TE75M302152	Assembly, perflour	Spare part
	□	1	Pneumatic cylinder, complete, stroke length = 250	TE75M302252	Assembly, perflour	Spare part
9	□♦	2	O-ring, EPDM	TE51T166	EPDM	Wear part
	□○	2	O-ring, FPM	TE51T167	FPM	Wear part
	□★	2	O-ring, perflour	TE51T168	Perflour	Wear part
10	□♦	1	O-ring, EPDM	TE51T169	EPDM	Wear part
	□○	1	O-ring, FPM	TE51T170	FPM	Wear part
	□★	1	O-ring, perflour	TE51T171	Perflour	Wear part
11		1	Gasket	TE75M508	Polymer	Spare part

*Note: Position 5 is not sold as single Spare part component. Only sold as part of a machine maintenance/repair order. For further information please contact Alfa Laval Customer Support.

There are special conditions and rules regarding repair of ATEX certified machines so please check the Instruction Manual for your machine before doing any repairs.

Service kits

♦	**Standard Spare part kit - EPDM**	**TE75M299**
○	**Standard Spare part kit - FPM**	**TE75M29901**
★	**Standard Spare part kit - Perflour**	**TE75M29902**

Parts marked with ♦ are included in the standard Spare part kit for SaniMidget Retractor - EPDM: TE75M299
Parts marked with O are included in the standard Spare part kit for SaniMidget Retractor - FPM: TE75M29901
Parts marked with ★ are included in the standard Spare part kit for SaniMidget Retractor - Perflour: TE75M29902

□ Configuration according to delivery note/order.

1.6

Parts drawing
Cylinder for Toftejorg SaniMidget Retractor Pneumatic Driven
Art. nos. TE75M302, TE73M30215, TE73M30225, TE73M302001, TE73M302151, TE73M302251, TE73M302002, TE73M302152, TE73M302252

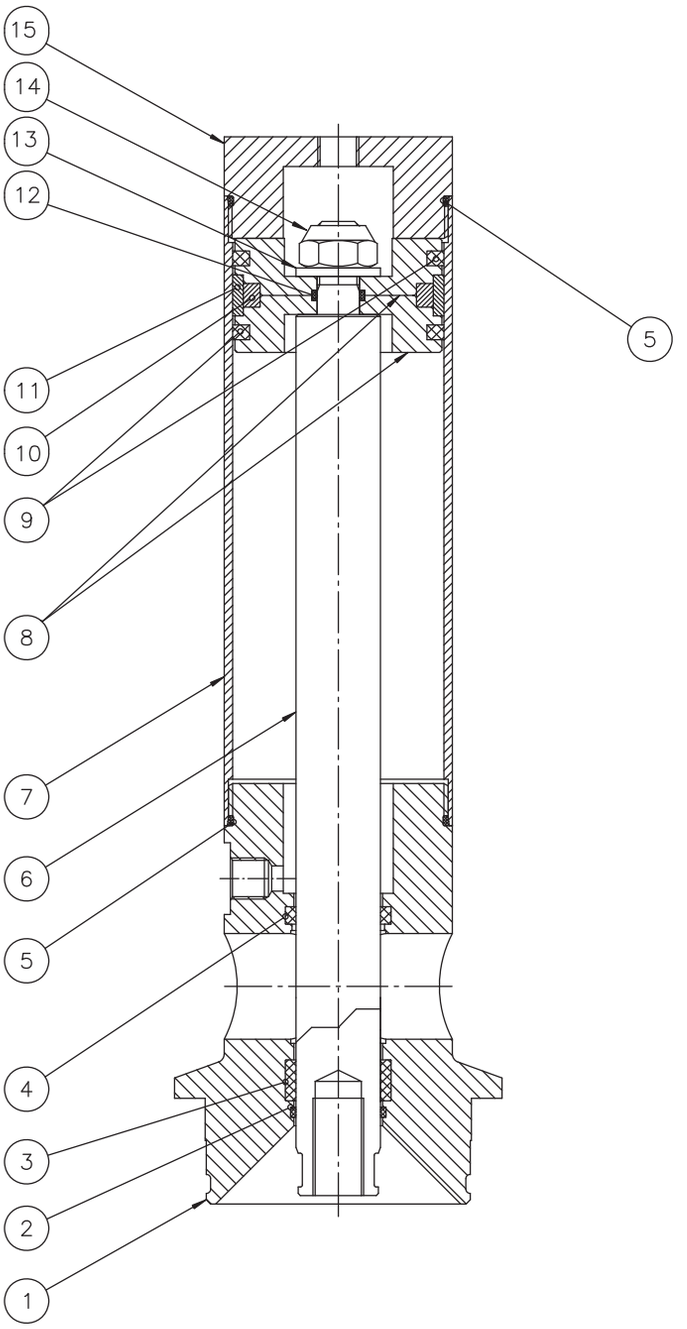

41010022

Parts list
Cylinder for Toftejorg SaniMidget Retractor Pneumatic Driven

Pos		Qty	Denomination	Article no.	Material
1		1	Adapter	TE75M500	Stainless steel
2	☐	1	O-ring	TE51T131	EPDM
	☐	1	O-ring	TE51T134	FPM
	☐	1	O-ring	TE51T133	Perflour
3		1	Guide tape	TE51L076	
4		1	Wiper	TE51T085	
5		2	O-ring	TE51T063	Elastomer
6	☐	1	Shaft, Stroke length = 100	TE75M590	Stainless steel
	☐	1	Shaft, Stroke length = 150	TE75M591	Stainless steel
	☐	1	Shaft, Stroke length = 250	TE75M592	Stainless steel
7	☐	1	Cylinder, Stroke length = 100	TE75M552	Stainless steel
	☐	1	Cylinder, Stroke length = 150	TE75M55215	Stainless steel
	☐	1	Cylinder, Stroke length = 250	TE75M55225	Stainless steel
8		2	Piston	TE75M509	Polymer
9		2	Gasket for Piston	TE51U500	Rubber
10		1	Magnet ring	TE75M550	
11		1	Guide tape	TE51L077	
12		1	O-ring	TE51T064	Elastomer
13		1	Washer	TE51B054	Stainless steel
14		1	Locking nut	TE51A524	Stainless steel
15		1	End cover	TE75M538	Stainless steel

☐ Configuration according to delivery note/order.

There are special conditions and rules regarding repair of ATEX certified machines so please check the Instruction Manual for your machine before doing any repairs.

Pos	Qty	Denomination	Item no.
Tool			
		Strap lock 50-135 mm	9690007001

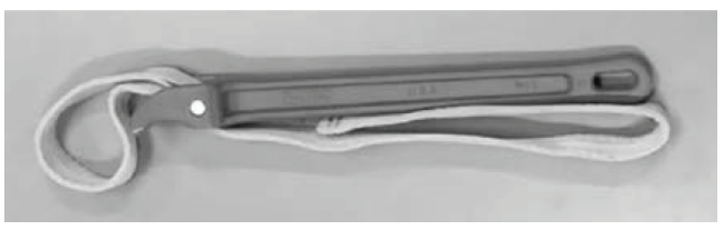

The strap lock tool is used to disassemble and reassemble the piston cylinder in order to replace the guide tape.

1.6

Cross Sectional Drawing
Toftejorg SaniMidget Retractor Pneumatic Driven, Spring Return
Article no. TE75M200/232

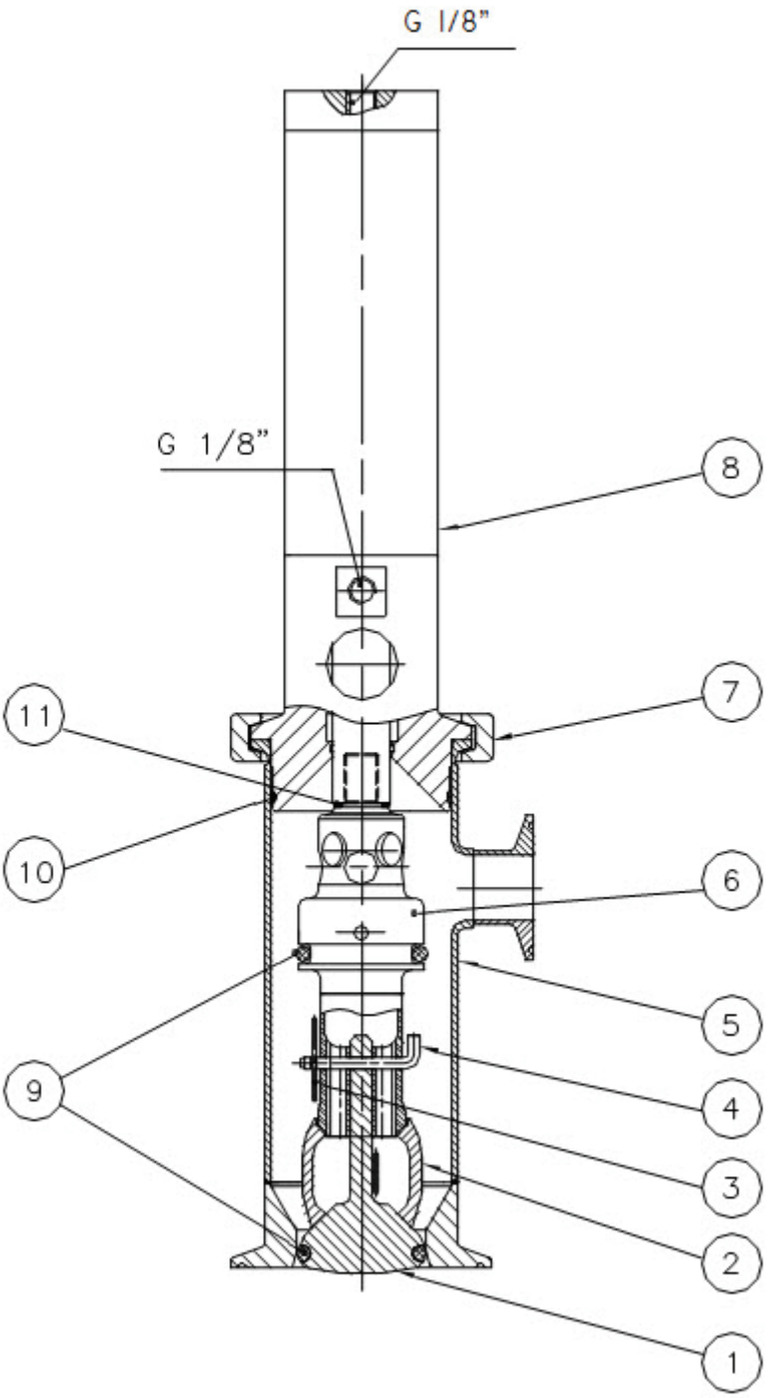

41010023

Parts list
Toftejorg SaniMidget Retractor Pneumatic Driven, Spring Return

Pos		Qty	Denomination	Article no.	Material	Remark
1		1	Valve	TE75M502	Stainless steel	Spare part
2	♦○★	1	Cleaner head	TE75M533	Polymer	Wear part
3	♦○★	1	Spring pin	TE52D549	Stainless steel	Spare part
4	♦○★	1	Lock-pin	TE75M529	Stainless steel	Spare part
5		1	Front tube, complete		Stainless steel	*Note
6	□	1	Piston, complete, Stroke length = 100	TE75M311	Assembly	Spare part
	□	1	Piston, complete, Stroke length = 150	TE75M31115	Assembly	Spare part
	□	1	Piston, complete, Stroke length = 250	TE75M31125	Assembly	Spare part
7		1	Clamp ring	TE51S126	Stainless steel	Spare part
8	□	1	Pneumatic cylinder, complete, Stroke length = 100	TE75M303	Assembly, EPDM	Spare part
	□	1	Pneumatic cylinder, complete, Stroke length = 150	TE75M30315	Assembly, EPDM	Spare part
	□	1	Pneumatic cylinder, complete, Stroke length = 250	TE75M30325	Assembly, EPDM	Spare part
	□	1	Pneumatic cylinder, complete, Stroke length = 100	TE75M303001	Assembly, FPM	Spare part
	□	1	Pneumatic cylinder, complete, Stroke length = 150	TE75M303151	Assembly, FPM	Spare part
	□	1	Pneumatic cylinder, complete, Stroke length = 250	TE75M303251	Assembly, FPM	Spare part
	□	1	Pneumatic cylinder, complete, Stroke length = 100	TE75M303002	Assembly, Perflour	Spare part
	□	1	Pneumatic cylinder, complete, Stroke length = 150	TE75M303152	Assembly, Perflour	Spare part
	□	1	Pneumatic cylinder, complete, Stroke length = 250	TE75M303252	Assembly, Perflour	Spare part
9	□♦	2	O-ring, EPDM	TE51T166	EPDM	Wear part
	□○	2	O-ring, FPM	TE51T167	FPM	Wear part
	□★	2	O-ring, perflour	TE51T168	Perflour	Wear part
10	□♦	1	O-ring, EPDM	TE51T169	EPDM	Wear part
	□○	1	O-ring, FPM	TE51T170	FPM	Wear part
	□★	1	O-ring, perflour	TE51T171	Perflour	Wear part
11		1	Gasket	TE75M508	Polymer	Spare part

*Note: Position 5 is not sold as single Spare part component. Only sold as part of a machine maintenance/repair order. For further information please contact Alfa Laval Customer Support.

There are special conditions and rules regarding repair of ATEX certified machines so please check the Instruction Manual for your machine before doing any repairs.

Service kits

♦	**Standard Spare part kit - EPDM**	**TE75M299**
○	**Standard Spare part kit - FPM**	**TE75M29901**
★	**Standard Spare part kit - Perflour**	**TE75M29902**

Parts marked with ♦ are included in the standard Spare part kit for SaniMidget Retractor - EPDM: TE75M299
Parts marked with O are included in the standard Spare part kit for SaniMidget Retractor - FPM: TE75M29901
Parts marked with ★ are included in the standard Spare part kit for SaniMidget Retractor - Perflour: TE75M29902

□ Configuration according to delivery note/order.

1.6

Cross Sectional Drawing
Cylinder for Toftejorg SaniMidget Retractor Pneumatic Driven, Spring Retur
Art. nos. TE75M303, TE73M30315, TE73M30325, TE73M303001, TE73M303151, TE73M303251, TE73M303002, TE73M303152, TE73M303252

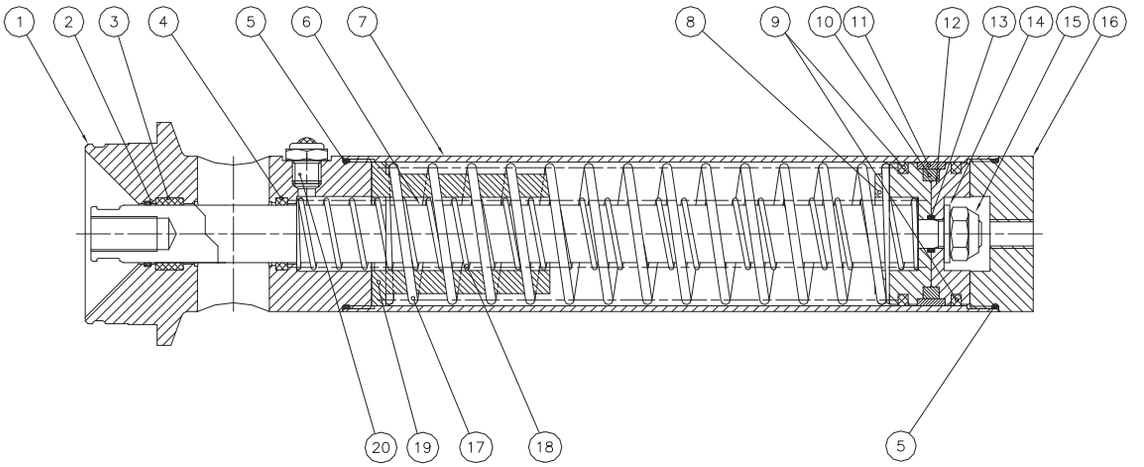

41010024

Parts list
Cylinder for Toftejorg SaniMidget Retractor Pneumatic Driven, Spring Return

Pos		Qty	Denomination	Article no.	Material
1		1	Adapter	TE75M500	Stainless steel
2	□	1	O-ring	TE51T131	EPDM
	□	1	O-ring	TE51T134	FPM
	□	1	O-ring	TE51T133	Perflour
3		1	Guide tape	TE51L076	
4		1	Wiper	TE51T085	
5		2	O-ring	TE51T063	Elastomer
6	□	1	Shaft, Stroke length = 100	TE75M520	Stainless steel
	□	1	Shaft, Stroke length = 150	TE75M521	Stainless steel
	□	1	Shaft, stroke length = 250, Stroke length = 250	TE75M522	Stainless steel
7	□	1	Cylinder, Stroke length = 100	TE75M551	Stainless steel
	□	1	Cylinder, Stroke length = 150	TE75M55115	Stainless steel
	□	1	Cylinder, Stroke length = 250	TE75M55125	Stainless steel
8		1	Piston	TE75M528	Polymer
9		2	Gasket for Piston	TE51U500	Rubber
10		1	Magnet ring	TE75M550	
11		1	Guide tape	TE51L077	
12		1	Piston	TE75M509	Polymer
13		1	O-ring	TE51T064	Elastomer
14		1	Washer	TE51B054	Stainless steel
15		1	Locking nut	TE51A524	Stainless steel
16		1	End cover	TE75M538	Stainless steel
17	□	1	Spring	TE75M605	
	□	1	Spring	TE75M606	
	□	1	Spring	TE75M607	
18	□	1	Spring	TE75M610	
	□	1	Spring	TE75M611	
	□	1	Spring	TE75M612	
19		1	Spring connection	TE75M531	Polymer
20		1	Air filter	TE51U126	Stainless steel

□ Configuration according to delivery note/order.

There are special conditions and rules regarding repair of ATEX certified machines so please check the Instruction Manual for your machine before doing any repairs.

Pos	Qty	Denomination	Item no.
Tool			
		Strap lock 50-135 mm	9690007001

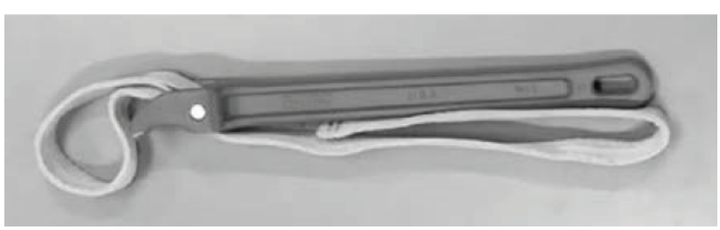

The strap lock tool is used to disassemble and reassemble the piston cylinder in order to replace the guide tape.

1.6

Cross sectional drawing
Toftejorg SaniMidget Retractor Media Driven, complete
Art. nos. TE75M000_032

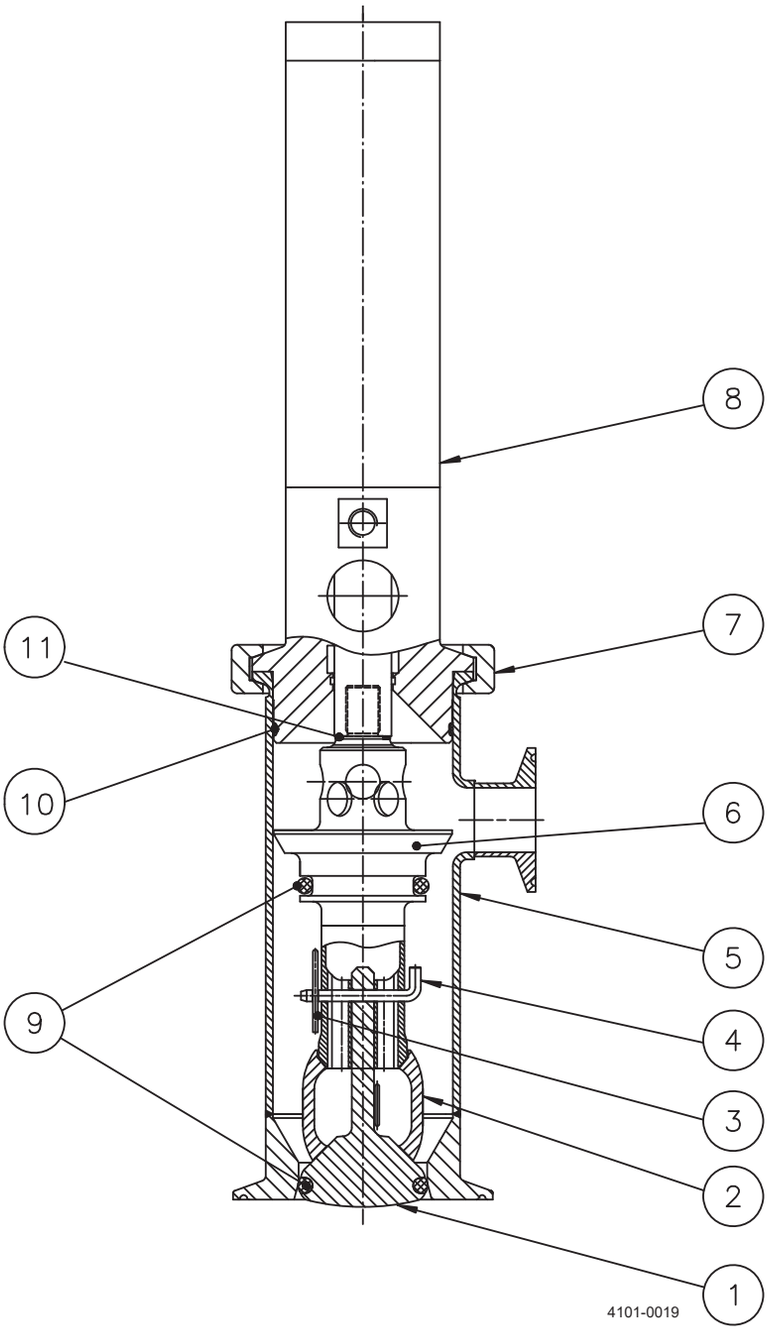

Parts list
Toftejorg SaniMidget Retractor Media Driven, complete
Art. nos. TE75M000_032

Pos		Qty	Denomination	Item no.	Materials	Remarks
1		1	Valve	TE75M502	Stainless steel	Spare part
2	♦○★	1	Cleaner head	TE75M533	Polymer	Wear part
3	♦○★	1	Spring pin	TE52D549	Stainless steel	Spare part
4	♦○★	1	Lock-pin	TE75M529	Stainless steel	Spare part
5		1	Front tube, complete		Stainless steel	*Note
6	□	1	Piston, complete, Stroke length = 100	TE75M310	Assy	Spare part
	□	1	Piston, complete, Stroke length = 150	TE75M31015	Assy	Spare part
	□	1	Piston, complete, Stroke length = 250	TE75M31025	Assy	Spare part
7		1	Clamp ring	TE51S126	Stainless steel	Spare part
8	□	1	Cylinder, complete, Stroke length = 100	TE75M300	Assy - EPDM	Spare part
	□	1	Cylinder, complete, Stroke length = 150	TE75M30015	Assy - EPDM	Spare part
	□	1	Cylinder, complete, Stroke length = 250	TE75M30025	Assy - EPDM	Spare part
	□	1	Cylinder, complete, Stroke length = 100	TE75M300001	Assy – FPM	Spare part
	□	1	Cylinder, complete, Stroke length = 150	TE75M300151	Assy – FPM	Spare part
	□	1	Cylinder, complete, Stroke length = 250	TE75M300251	Assy - FPM	Spare part
	□	1	Cylinder, complete, Stroke length = 100	TE75M300002	Assy – Perflour	Spare part
	□	1	Cylinder, complete, Stroke length = 150	TE75M300152	Assy – Perflour	Spare part
	□	1	Cylinder, complete, Stroke length = 250	TE75M300252	Assy – Perflour	Spare part
9	□♦	2	O-ring, EPDM	TE51T166	EPDM	Spare part
	□○	2	O-ring, FPM	TE51T167	FPM	Spare part
	□★	2	O-ring, perflour	TE51T168	Perflour	Spare part
10	□♦	1	O-ring, EPDM	TE51T169	EPDM	Spare part
	□○	1	O-ring, FPM	TE51T170	FPM	Spare part
	□★	1	O-ring, perflour	TE51T171	Perflour	Spare part
11		1	Gasket	TE75M508	Polymer	Spare part

*Note: Position 5 is not sold as single Spare part component. Only sold as part of a machine maintenance/repair order. For further information please contact Alfa Laval Customer Support.

There are special conditions and rules regarding repair of ATEX certified machines so please check the Instruction Manual for your machine before doing any repairs.

Service kits

♦	**Standard Spare part kit - EPDM**	**TE75M299**
○	**Standard Spare part kit - FPM**	**TE75M29901**
★	**Standard Spare part kit - Perflour**	**TE75M29902**

Parts marked with ◆ are included in the standard Spare part kit for SaniMidget Retractor - EPDM: TE75M299
Parts marked with O are included in the standard Spare part kit for SaniMidget Retractor - FPM: TE75M29901
Parts marked with ★ are included in the standard Spare part kit for SaniMidget Retractor - Perflour: TE75M29902

□ Configuration according to delivery note/order.

1.6

Cross sectional drawing
Cylinder for Toftejorg SaniMidget Retractor, Media Driven
Art. nos. TE75M300, TE73M30015, TE73M30025, TE73M300001, TE73M300151, TE73M300251, TE73M300002, TE73M300152, TE73M300252

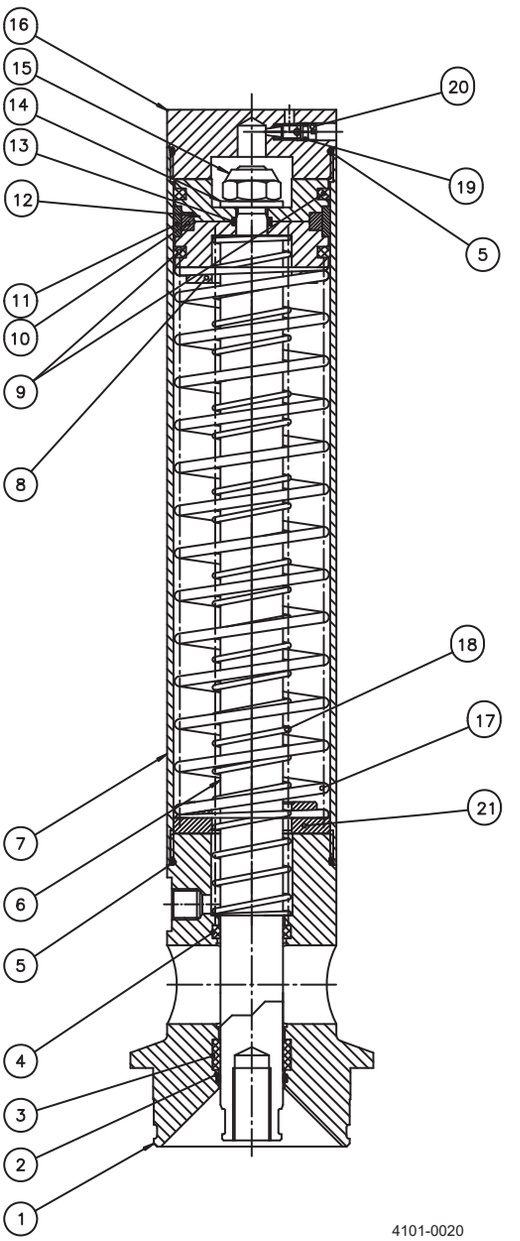

Parts list
Cylinder for Toftejorg SaniMidget Retractor Media Driven
Art. nos. TE75M300, TE73M30015, TE73M30025, TE73M300001, TE73M300151, TE73M300251, TE73M300002, TE73M300152, TE73M300252

Pos		Qty	Denomination	Item no.	Material
1		1	Adapter	TE75M500	Stainless steel
2	❑	1	O-ring, EPDM	TE51T131	EPDM
	❑	1	O-ring, FPM	TE51T134	FPM
	❑	1	O-ring, Perflour	TE51T133	Perflour
3		1	Guide tape	TE51L076	
4		1	Wiper	TE51T085	
5		2	O-ring	TE51T063	Elastomer
6	❑	1	Shaft, Stroke length = 100	TE75M520	Stainless steel
	❑	1	Shaft, Stroke length = 150	TE75M521	Stainless steel
	❑	1	Shaft, Stroke length = 250	TE75M522	Stainless steel
7	❑	1	Cylinder, Stroke length = 100	TE75M551	Stainless steel
	❑	1	Cylinder, Stroke length = 150	TE75M55115	Stainless steel
	❑	1	Cylinder, Stroke length = 250	TE75M55125	Stainless steel
8		1	Piston	TE75M528	Polymer
9		2	Gasket for Piston	TE51U500	Rubber
10		1	Magnet ring	TE75M550	
11		1	Guide tape	TE51L077	
12		1	Piston	TE75M509	Polymer
13		1	O-ring	TE51T064	Elastomer
14		1	Washer	TE51B054	Stainless steel
15		1	Locking nut	TE51A524	Stainless steel
16		1	End cover	TE75M527	Stainless steel
17	❑	1	Spring, Stroke length = 100	TE75M605	
	❑	1	Spring, Stroke length = 150	TE75M606	
	❑	1	Spring, Stroke length = 250	TE75M607	
18	❑	1	Spring, Stroke length = 100	TE75M610	
	❑	1	Spring, Stroke length = 150	TE75M611	
	❑	1	Spring, Stroke length = 250	TE75M612	
19		1	O-ring	TE51T172	Elastomer
20		1	Air screw	TE75M553	Stainless steel
21		1	Spring connection	TE75M530	Polymer
22		1	Air filter	TE51U126	Stainless steel

❑ Configuration according to delivery note/order.

There are special conditions and rules regarding repair of ATEX certified machines so please check the Instruction Manual for your machine before doing any repairs.

Pos	Qty	Denomination	Item no.
Tool			
		Strap lock 50-135 mm	9690007001

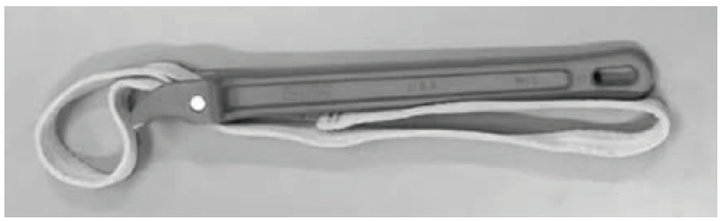

The strap lock tool is used to disassemble and reassemble the piston cylinder in order to replace the guide tape.

Not manufactured anymore

1.6

Exploded view drawings, Alfa Laval Toftejorg SaniMega

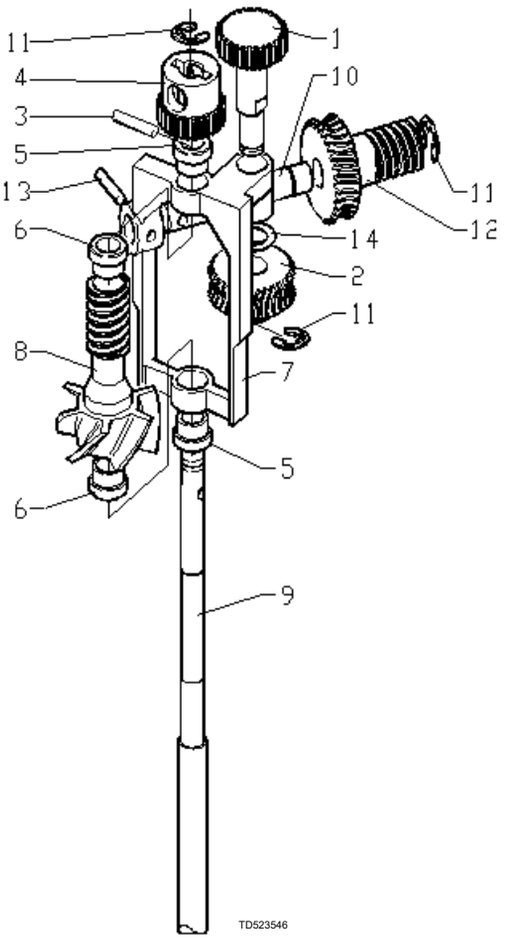

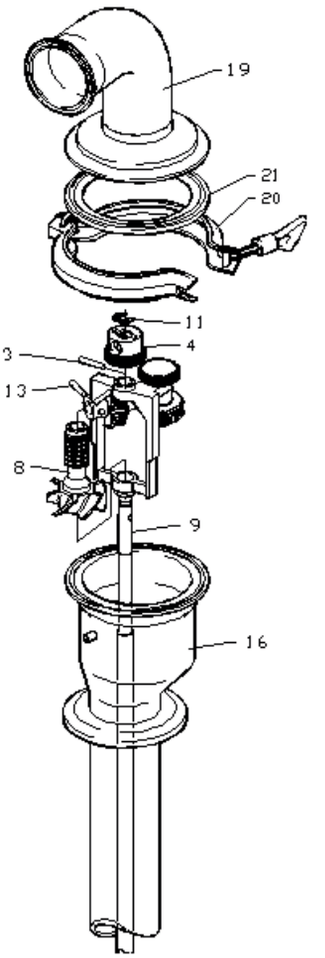

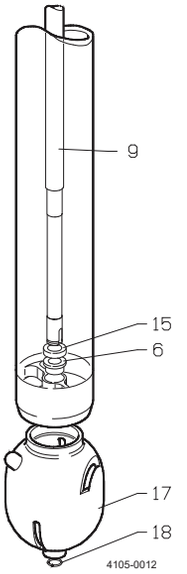

Reference list of parts, Alfa Laval Toftejorg SaniMega

Pos	Qty	Denomination	Item no.	Material	Remark
1	1	Pinion	TE12A514	Polymer	
2	1	Worm wheel	TE12A508	Stainless steel	
3	1	Cylindrical Pin	TE51C017	Stainless steel	
4	1	Gear wheel	TE12A506	Stainless steel	
5	2	Bush	TE12A528	Polymer	
6	3	Bearing f. Turbine shaft	TE20G640	Polymer	
7	1	Gear frame	TE12A505	Stainless steel	
8	1	Turbine shaft	TE12A509	Stainless steel	
9	1	Drive shaft	TE12A530/33	Stainless steel	
10	1	Shaft	TE12A507	Stainless steel	
11	3	Circlip	TE51C202	Stainless steel	
12	1	Horizontal shaft	TE12A513	Polymer	
13	1	Pin	TE51C004	Stainless steel	
14	1	Washer	TE12A515	Polymer	
15	1	Washer	TE12A566	Stainless steel	
16	1	Housing		Stainless steel	*Note
17	1	Cleaner head	TE12A573	Stainless steel	
18	1	Lock ring	TE12A559	Stainless steel	
19	1	Inlet connection	TE12A526	Stainless steel	
20	1	Clamp ring	9611993114	Stainless steel	
21	1	Gasket	TE51S118	Elastomer	

*Note: Pos. 16 is not sold as single spare part component but only as part of a machine maintenance/repair order.
For further information please contact Alfa Laval Customer Support.

Pos	Qty	Denomination	Item no.	Remarks
		Spare part kit	TE12A289	
Consisting of:				
3	2	Cylindrical Pin	TE51C017	Stainless steel
6	2	Bearing f. Turbine shaft	TE20G640	Polymer
11	3	Circlip	TE51C202	Stainless steel
12	1	Horizontal shaft	TE12A513	Polymer
18	1	Lock ring	TE12A559	Stainless steel

1.6

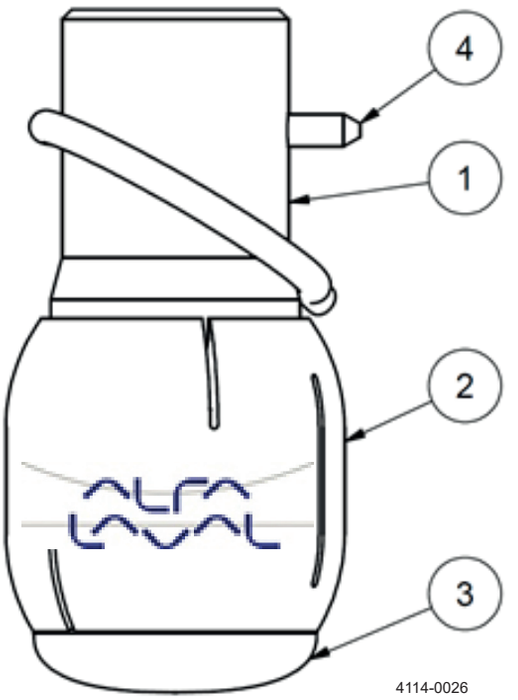

Pos	Qty	Denomination	Position 1 Connector AISI 316L	Position 2 Rotor PEEK 450G	UltraPure Position 2 Rotor PEEK MG	Position 3 Stator AISI 316L	Position 4 Clip AISI 316L
SaniMidget SB, SaniMagnum SB & SaniMega SB							
	-	SaniMidget SB 360° 1" BPE US, TE16B102-x0	TE16B510	TE16B543[1)]		TE16B521	TE16B562[2)]
	-	SaniMidget SB 270° UP 1" BPE US, TE16B132-x0	TE16B510	TE16B540[1)]		TE16B520	TE16B562[2)]
		SaniMidget SB 360° 1" BPE US, TE16B152-x0	TE16B515	TE16B552[1)]		TE16B531	TE16B563[3)]
		SaniMidget SB 270° UP 1½" BPE US, TE16B182-x0	TE16B515	TE16B550[1)]		TE16B530	TE16B563[3)]
		SaniMidget SB 360° 1" ISO 2037, TE16B202-x0	TE16B511	TE16B543[1)]		TE16B521	TE16B562[2)]
		SaniMidget SB 360° 1" BPE US, TE16B203-x0	TE16B512	TE16B543[1)]		TE16B521	TE16B562[2)]
		SaniMidget SB 270° UP 1" ISO 2037, TE16B232-x0	TE16B511	TE16B540[1)]		TE16B520	TE16B562[2)]
		SaniMidget SB 270° UP 1" BPE US, TE16B233-x0	TE16B512	TE16B540[1)]		TE16B520	TE16B562[2)]
		SaniMagnum SB 360° 1½" ISO 2037, TE17B102-x0	TE17B500	TE17B543[1)]		TE16B531	TE16B563[3)]
		SaniMagnum SB 270° UP 1½" ISO 2037, TE17B132-x0	TE17B500	TE17B540[1)]		TE16B530	TE16B563[3)]
		SaniMagnum SB 360° 1½" BPE US, TE17B203-x0	TE17B502	TE17B543[1)]		TE16B531	TE16B563[3)]
		SaniMagnum SB 270° UP 1½" BPE US, TE17B233-x0	TE16B502	TE17B540[1)]		TE16B530	TE16B563[3)]
		SaniMega SB 360° Clip on 2" BPE US, TE18B102-x0	TE18B500	TE18B543[1)]		TE18B521	TE18B562[4)]
		SaniMega SB 270° UP Clip on 2" BPE US, TE18B132-x0	TE18B500	TE18B540[1)]		TE18B520	TE18B562[4)]
		SaniMega SB 360° HF Clip on 2" BPE US, TE18B142-x0	TE18B500	TE18B544[1)]		TE18B521	TE18B562[4)]
		SaniMega SB 270° UP HF Clip on 2" BPE US, TE18B152-x0	TE18B500	TE18B545[1)]		TE18B521	TE18B562[4)]
		SaniMega SB 360° Weld on 2" BPE US, TE18B203-x0	TE18B502	TE18B543[1)]		TE18B521	TE18B562[4)]
		SaniMega SB 270° UP Weld on 2" BPE US, TE18B233-x0	TE18B502	TE18B540[1)]		TE18B520	TE18B562[4)]
		SaniMega SB 360° HF Weld on 2" BPE US, TE18B263-x0	TE18B502	TE18B544[1)]		TE18B521	TE18B562[4)]
		SaniMega SB 270° UP HF Weld on 2" BPE US, TE18B293-x0	TE18B502	TE18B545[1)]		TE18B520	TE18B562[4)]
SaniMidget SB, SaniMagnum SB & SaniMega SB UltraPure							
		SaniMidget SB 270° UP Clip on 1" BPE US, TE16B132x5	TE16B510		TE16B542[1)]	TE16B520	TE16B562[2)]
		SaniMidget SB 360° Clip on 1" BPE US, TE16B102x5	TE16B510		TE16B546[1)]	TE16B521	TE16B562[2)]
		SaniMidget SB 270° UP Weld on 1" ISO 2037, TE16B232x5	TE16B511		TE16B542[1)]	TE16B520	TE16B562[2)]
		SaniMidget SB 360° Weld on 1" ISO 2037, TE16B202x5	TE16B511		TE16B546[1)]	TE16B521	TE16B562[2)]
		SaniMidget SB 270° UP Weld-on 1" BPE US, TE16B233-x5	TE16B512		TE16B542[1)]	TE16B520	TE16B562[2)]
		SaniMidget SB 360° Weld on 1" BPE US, TE16B203x5	TE16B512		TE16B546[1)]	TE16B521	TE16B562[2)]

[1)] Wear part

[2)] Q-Doc version: 8010005852

[3)] Q-Doc version: 8010005853

[4)] Q-Doc version: 8010005854

Not manufactured anymore

1.6

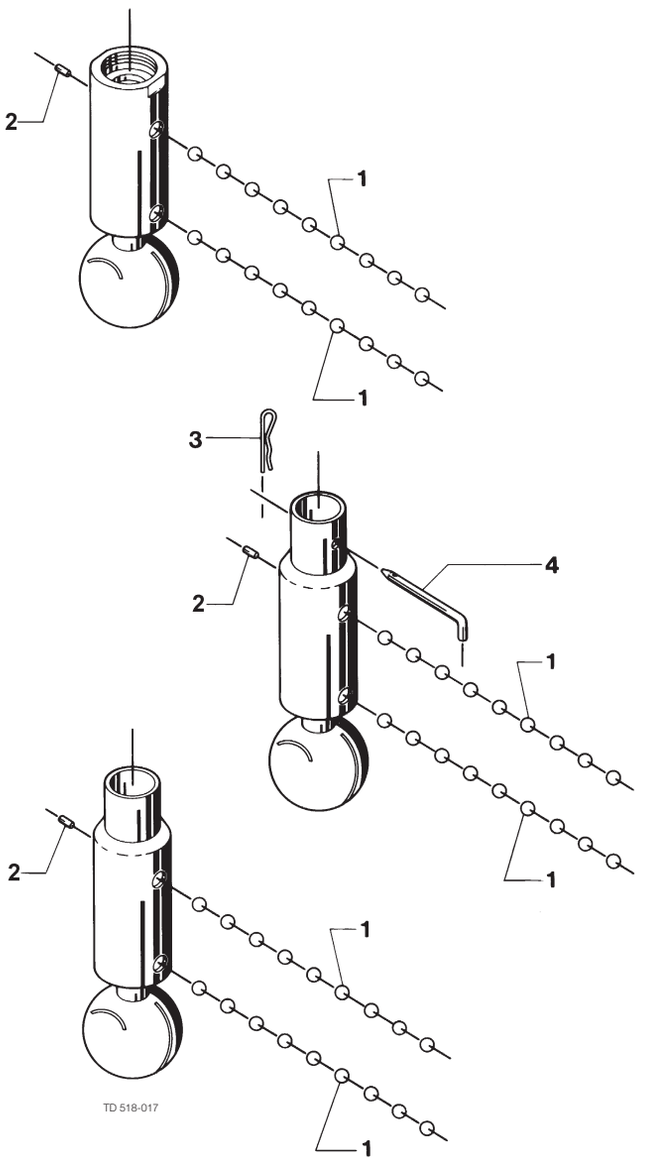

Pos		Qty	Denomination	Dia. 45	Dia. 65
1	□	1	Ball bearings (one ball race)		
2	□	1	Stop pin		
3		1	Split pin	9611711220	9611711220
4		1	Lock pin	9611711200	9611711200

□			**Ball bearing kit**	**9611992965**	**9611992966**

2 pcs. Ball bearing kits to be ordered if all Balls have to be changed

900-162

1.7 Static spray balls

Static Spray Balls are recommended for less demanding cleaning duties and storage tanks with a low cleaning frequency.





Spare parts

LKRK Spray Ball 1.7.540

Spare parts for obsolete products

Toftejorg SSB Retractor, media-to-spring 1.7.542
Toftejorg SSB Retractor, air-to-spring 1.7.550
Toftejorg SSB Retractor, air-to-air 1.7.558

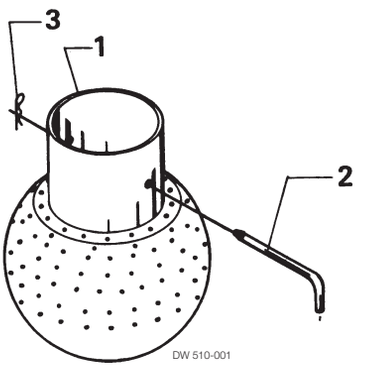
3
1
2
DW 510-001

Inch Tube -AISI 316

Pos	Qty	Denomination	Diam. 64 2 mm holes	Diam. 94 2 mm holes	Diam. 94 3 mm holes
1	1	Bottom drilled ball			
	1	Top drilled ball			
	1	Fully drilled ball			
2	1	Lock pin	9611711200	9611711210	9611711210
3	1	Split pin	9611711220	9611711220	9611711220

DIN Tube -AISI 316

Pos	Qty	Denomination	Diam. 64 2 mm holes	Diam. 94 2 mm holes	Diam. 94 3 mm holes
1	1	Bottom drilled ball			
	1	Top drilled ball			
	1	Fully drilled ball			
2	1	Lock pin	9611711200	9611711210	9611711210
3	1	Split pin	9611711220	9611711220	9611711220

Recommende spare parts: Pos. 2, 3.

Not manufactured anymore

1.7

Alfa Laval SSB Retractor Stroke 60 Media-to-Spring

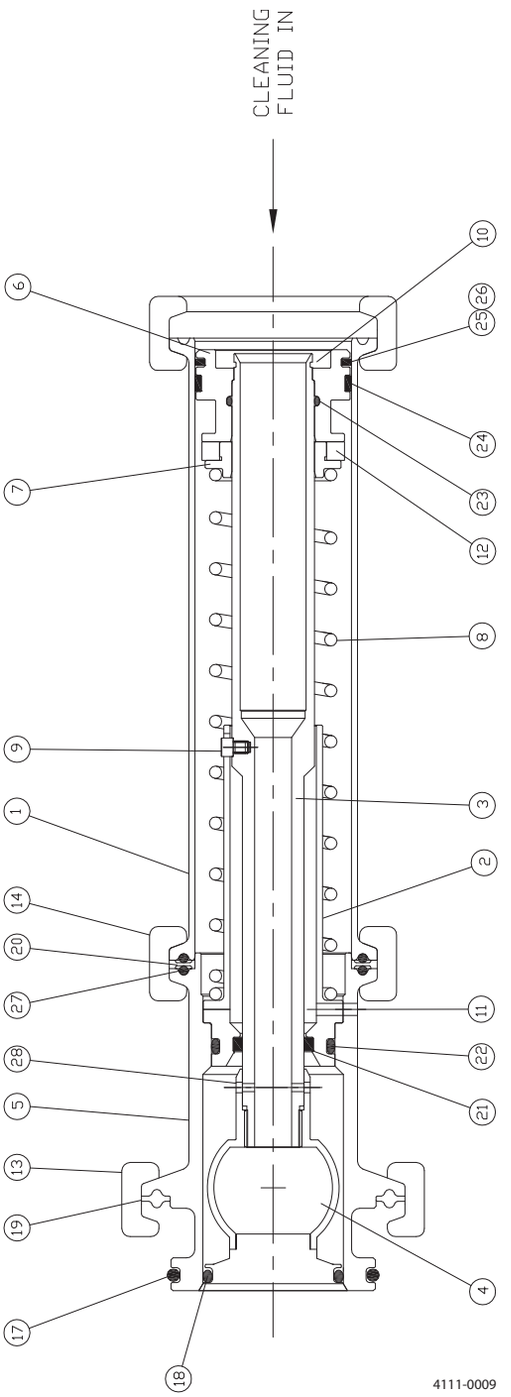

Pos		Qty	Denomination	Remark	TE75P030	TE75P030-04	TE75P050	TE75P050-04
Alfa Laval SSB Retractor Stroke 60 Media-to-Spring								
1		1	Body Tube[1)]					
2		1	Sleeve	Spare part	TE75P558	TE75P558	TE75P558	TE75P558
3		1	Spray Stem	Spare part	TE75P559	TE75P559	TE75P559	TE75P559
4	□	1	Spray ball assembly (drilled)	Spare part	TE75P592	TE75P592		
	□	1	Spray ball assembly (drilled)	Spare part			TE75P562	TE75P562
5		1	Housing 2" ISO	Spare part	TE75P563	TE75P563	TE75P563	TE75P563
6		1	Piston	Spare part	TE75P544	TE75P544	TE75P544	TE75P544
7		1	Piston Spacer	Spare part	TE75P545	TE75P545	TE75P545	TE75P545
8		1	Spring	Spare part	TE75P561	TE75P561	TE75P561	TE75P561
9	□	1	Orientation Screw	Spare part	N/A	N/A	TE75P502	TE75P502
10	◆⊙	1	Retaining Ring	Spare part	TE75P587	TE75P587	TE75P587	TE75P587
11	◆⊙	1	Spring Pin	Spare part	TE75P552	TE75P552	TE75P552	TE75P552
12		1	Magnet	Spare part	TE75P504	TE75P504	TE75P504	TE75P504
13		1	Mounting Clamp 2" ISO	Spare part	TE75P505	TE75P505	TE75P505	TE75P505
14		1	Body Clamp DIN 40	Spare part	TE75P506	TE75P506	TE75P506	TE75P506
17	□◆	1	Home Chamber/Spigot Seal, (EPDM)	Wear part	TE75P538		TE75P538	
	□⊙	1	Home Chamber/Spigot Seal, (FFKM)	Wear part		TE75P508		TE75P508
18	□◆	1	Home Chamber/Stem Seal, (EPDM)	Wear part	TE75P539		TE75P539	
	□⊙	1	Home Chamber/Stem Seal, (FFKM)	Wear part	TE75P539	TE75P509	TE75P539	TE75P509
19	◆⊙	1	Gasket-Home Chamber Mounting Flange	Spare part	TE75P550	TE75P550	TE75P550	TE75P550
20		1	Solid Gasket Spacer Ring	Spare part	TE75P573	TE75P573	TE75P573	TE75P573
21	◆⊙	1	Stem Product Seal	Wear part	TE75P543	TE75P543	TE75P543	TE75P543
22	□	1	Home Chamber/Sleeve Seal, (EPDM)	Wear part	TE75P540		TE75P540	
	□◆	1	Home Chamber/Sleeve Seal, (FFKM)	Wear part		TE75P574		TE75P574
23	□◆	1	Piston/Stem Seal, (EPDM)	Wear part	TE75P541	TE75P575	TE75P541	TE75P575
	□⊙	1	Piston/Stem Seal, (FFKM)	Wear part	TE75P541	TE75P575	TE75P541	TE75P575
24	◆⊙	1	Piston Slide Ring	Wear part	TE75P514	TE75P514	TE75P514	TE75P514
25	◆⊙	1	Piston Seal	Wear part	TE75P586	TE75P586	TE75P586	TE75P586
26	□◆	1	Energising O-Ring, (EPDM)	Wear part	TE75P516		TE75P516	
	□⊙	1	Energising O-Ring, (FFKM)	Wear part		TE75P546		TE75P546
27	◆⊙	2	O-Ring	Wear part	TE75P511	TE75P511	TE75P511	TE75P511
28	◆⊙	1	Ball Securing Pin	Wear part	TE75P555	TE75P555	TE75P555	TE75P555

Service kits

Service kit Standard	TE75P28590
Service kit Standard “Special Trim”	TE75P28594

[1)] Position 1 is not sold as single Spare part component. Only sold as part of a machine maintenance/repair order. For further information please contact Alfa Laval Customer Support.

□ Configuration according to delivery note/order.

Parts marked with ◆ are included in the Service Kit Standard for TE75P030, TE75P031, TE75P050 and TE75P051: TE75P28590.
The Service Kit comprises of a full set of replacement seals, a new circlip and new roll pin. All the parts necessary to carry out a service or repair to the seals are included.
The Standard Service Kit seal materials are EPDM and carbon filled PTFE.

Parts marked with ⊙ are included in the Service kit Standard “Special Trim” TE75P030-04, TE75P031-04, TE75P050-04, TE75P051-04, TE75Q030-04, TE75Q031-04, TE75Q050-04 and TE75Q051-04: TE75P28594.
The Service Kit comprises of a full set of replacement seals, a new circlip and new roll pin. All the parts necessary to carry out a service or repair to the seals are included.
If the unit is fitted with our ‘Special Trim’ seals due to aggressive product or cleaning liquid, the service kit required is part number TE75P28594.
The seal materials are FFKM (Perfluoroclastomer) and carbon filled PTFE.

1.7

Alfa Laval SSB Retractor Stroke 60 Media-to-Spring Hastelloy

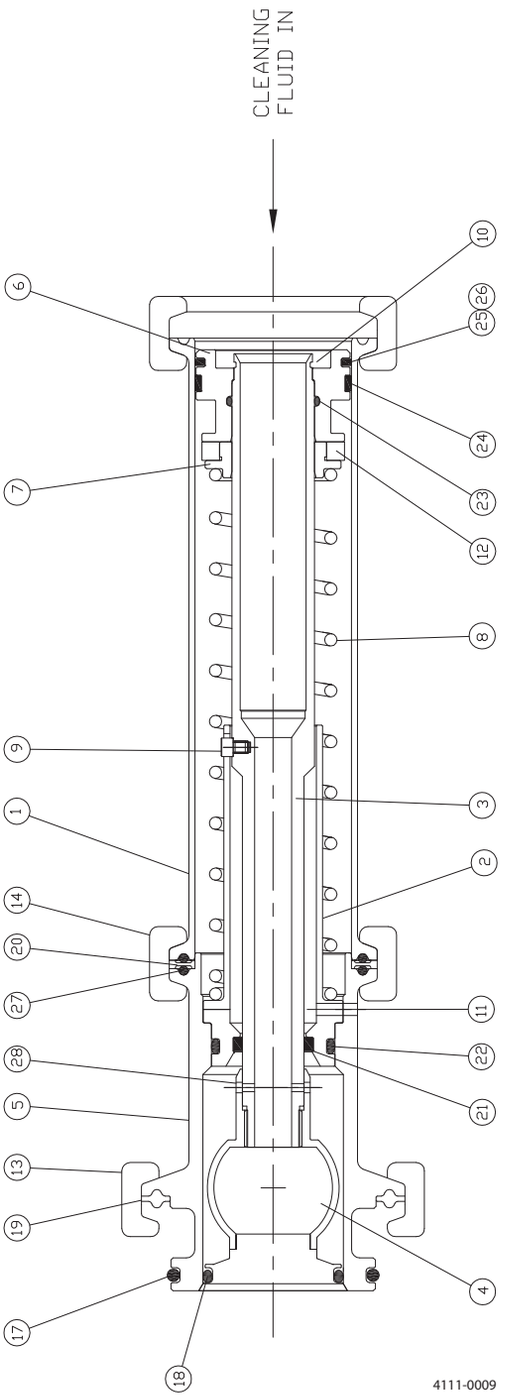

Pos		Qty	Denomination	Remark	TE75Q030-04	TE75Q050-04
Alfa Laval SSB Retractor Stroke 60 Media-to-Spring Hastelloy						
1		1	Body Tube[1)]			
2		1	Sleeve	Spare part	TE75P558	TE75P558
3		1	Spray Stem	Spare part	TE75P559	TE75P559
4	□	1	Spray ball assembly (drilled)	Spare part	TE75Q592	TE75Q562
5		1	Housing 2" ISO	Spare part	TE75Q563	TE75Q563
6		1	Piston	Spare part	TE75P544	TE75P544
7		1	Piston Spacer	Spare part	TE75P545	TE75P545
8		1	Spring	Spare part	TE75P561	TE75P561
9	□	1	Orientation Screw	Spare part	N/A	TE75P502
10	⊙	1	Retaining Ring	Spare part	TE75P587	TE75P587
11	⊙	1	Spring Pin	Spare part	TE75P552	TE75P552
12		1	Magnet	Spare part	TE75P504	TE75P504
13		1	Mounting Clamp 2" ISO	Spare part	TE75P505	TE75P505
14		1	Body Clamp DIN 40	Spare part	TE75P506	TE75P506
17	⊙	1	Home Chamber/Spigot Seal	Wear part	TE75P508	TE75P508
18	⊙	1	Home Chamber/Stem Seal	Wear part	TE75P509	TE75P509
19	⊙	1	Gasket-Home Chamber Mounting Flange	Spare part	TE75P550	TE75P550
20		1	Solid Gasket Spacer Ring	Spare part	TE75P573	TE75P573
21	⊙	1	Stem Product Seal	Wear part	TE75P543	TE75P543
22	⊙	1	Home Chamber/Sleeve Seal	Wear part	TE75P574	TE75P574
23	⊙	1	Piston/Stem Seal	Wear part	TE75P575	TE75P575
24	⊙	1	Piston Slide Ring	Wear part	TE75P514	TE75P514
25	⊙	1	Piston Seal	Wear part	TE75P586	TE75P586
26	⊙	1	Energising O-Ring	Wear part	TE75P546	TE75P546
27	⊙	2	O-Ring	Wear part	TE75P511	TE75P511
28	⊙	1	Ball Securing Pin	Spare part	TE75P555	TE75P555

Service kits

Service kit Standard “Special Trim”	TE75P28594

[1)] Position 1 is not sold as single Spare part component. Only sold as part of a machine maintenance/repair order. For further information please contact Alfa Laval Customer Support.

□ Configuration according to delivery note/order.

Parts marked with ⊙ are included in the Service kit Standard “Special Trim” TE75P030-04, TE75P031-04, TE75P050-04, TE75P051-04, TE75Q030-04, TE75Q031-04, TE75Q050-04 and TE75Q051-04: TE75P28594.
The Service Kit comprises of a full set of replacement seals, a new circlip and new roll pin. All the parts necessary to carry out a service or repair to the seals are included.
If the unit is fitted with our ‘Special Trim’ seals due to aggressive product or cleaning liquid, the service kit required is part number TE75P28594.
The seal materials are FFKM (Perfluoroclastomer) and carbon filled PTFE.

1.7

Alfa Laval SSB Retractor Stroke 120 Media-to-Spring

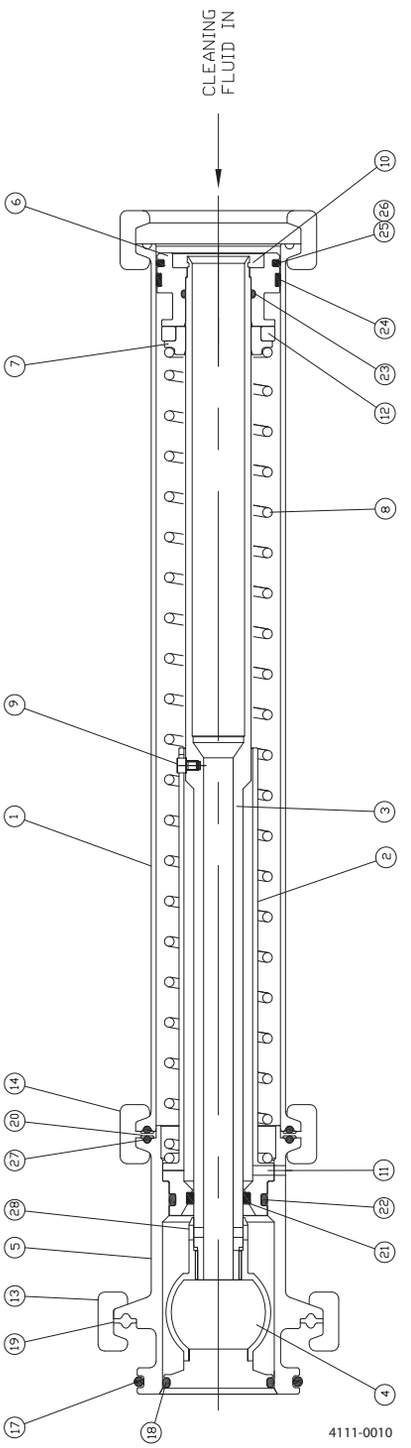

Pos		Qty	Denomination	Remark	TE75P031	TE75P031-04	TE75P051	TE75P051-04
Alfa Laval SSB Retractor Stroke 120 Media-to-Spring								
1		1	Body Tube[1)]					
2		1	Sleeve	Spare Part	TE75P569	TE75P569	TE75P569	TE75P569
3		1	Spray Stem	Spare Part	TE75P570	TE75P570	TE75P570	TE75P570
4	□	1	Spray ball assembly (drilled)	Spare Part	TE75P592	TE75P592		
	□	1	Spray ball assembly (drilled)	Spare Part			TE75P562	TE75P562
5		1	Housing 2" ISO	Spare Part	TE75P563	TE75P563	TE75P563	TE75P563
6		1	Piston	Spare Part	TE75P544	TE75P544	TE75P544	TE75P544
7		1	Piston Spacer	Spare Part	TE75P545	TE75P545	TE75P545	TE75P545
8		1	Spring	Spare Part	TE75P572	TE75P572	TE75P572	TE75P572
9	□	1	Orientation Screw	Spare Part	N/A	N/A	TE75P502	TE75P502
10	◆⊙	1	Retaining Ring	Spare Part	TE75P587	TE75P587	TE75P587	TE75P587
11	◆⊙	1	Spring Pin	Spare Part	TE75P552	TE75P552	TE75P552	TE75P552
12		1	Magnet	Spare Part	TE75P504	TE75P504	TE75P504	TE75P504
13		1	Mounting Clamp 2" ISO	Spare Part	TE75P505	TE75P505	TE75P505	TE75P505
14		1	Body Clamp DIN 40	Spare Part	TE75P506	TE75P506	TE75P506	TE75P506
17	□◆	1	Home Chamber/Spigot Seal, (EPDM)	Wear Part	TE75P538		TE75P538	
	□⊙	1	Home Chamber/Spigot Seal, (FFKM)	Wear Part		TE75P508		TE75P508
18	□◆	1	Home Chamber/Stem Seal, (EPDM)	Wear Part	TE75P539		TE75P539	
	□⊙	1	Home Chamber/Stem Seal, (FFKM)	Wear Part	TE75P539	TE75P509	TE75P539	TE75P509
19	◆⊙	1	Gasket-Home Chamber Mounting Flange	Spare Part	TE75P550	TE75P550	TE75P550	TE75P550
20		1	Solid Gasket Spacer Ring	Spare Part	TE75P573	TE75P573	TE75P573	TE75P573
21	◆⊙	1	Stem Product Seal	Wear Part	TE75P543	TE75P543	TE75P543	TE75P543
22	□	1	Home Chamber/Sleeve Seal, (EPDM)	Wear Part	TE75P540		TE75P540	
	□◆	1	Home Chamber/Sleeve Seal, (FFKM)	Wear Part		TE75P574		TE75P574
23	□◆	1	Piston/Stem Seal, (EPDM)	Wear Part	TE75P541	TE75P575	TE75P541	TE75P575
	□⊙	1	Piston/Stem Seal, (FFKM)	Wear Part	TE75P541	TE75P575	TE75P541	TE75P575
24	◆⊙	1	Piston Slide Ring	Wear Part	TE75P514	TE75P514	TE75P514	TE75P514
25	◆⊙	1	Piston Seal	Wear Part	TE75P586	TE75P586	TE75P586	TE75P586
26	□◆	1	Energising O-Ring, (EPDM)	Wear Part	TE75P516		TE75P516	
	□⊙	1	Energising O-Ring, (FFKM)	Wear Part		TE75P546		TE75P546
27	◆⊙	2	O-Ring	Wear Part	TE75P511	TE75P511	TE75P511	TE75P511
28	◆⊙	1	Ball Securing Pin	Wear Part	TE75P555	TE75P555	TE75P555	TE75P555

Service kits

Service kit Standard	TE75P28590
Service kit Standard “Special Trim”	TE75P28594

[1)] Position 1 is not sold as single spare part component. Only sold as part of a machine maintenance/repair order. For further information please contact Alfa Laval Customer Support.

□ Configuration according to delivery note/order.

Parts marked with ◆ are included in the Service Kit Standard for TE75P030, TE75P031, TE75P050 and TE75P051: TE75P28590.
The Service Kit comprises of a full set of replacement seals, a new circlip and new roll pin. All the parts necessary to carry out a service or repair to the seals are included.
The Standard Service Kit seal materials are EPDM and carbon filled PTFE.

Parts marked with ⊙ are included in the Service kit Standard “Special Trim” TE75P030-04, TE75P031-04, TE75P050-04, TE75P051-04, TE75Q030-04, TE75Q031-04, TE75Q050-04 and TE75Q051-04: TE75P28594.
The Service Kit comprises of a full set of replacement seals, a new circlip and new roll pin. All the parts necessary to carry out a service or repair to the seals are included.
If the unit is fitted with our ‘Special Trim’ seals due to aggressive product or cleaning liquid, the service kit required is part number TE75P28594.
The seal materials are FFKM (Perfluoroclastomer) and carbon filled PTFE.

1.7

Alfa Laval SSB Retractor Stroke 120 Media-to-Spring Hastelloy

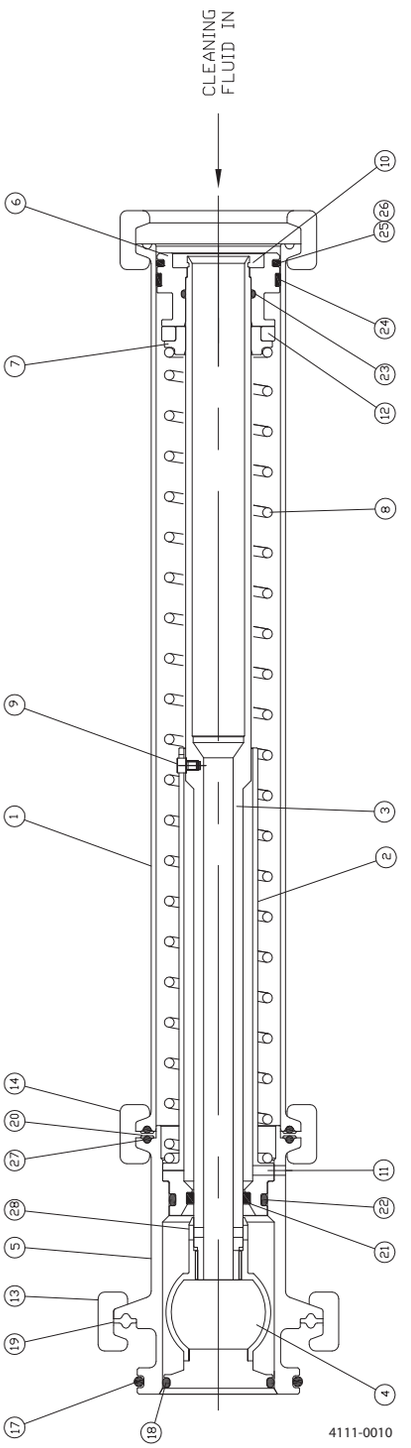

Pos		Qty	Denomination	Remark	TE75Q031-04	TE75Q051-04
Alfa Laval SSB Retractor Stroke 120 Media-to-Spring Hastelloy						
1		1	Body Tube[1)]			
2		1	Sleeve	Spare part	TE75P569	TE75P569
3		1	Spray Stem	Spare part	TE75P570	TE75P570
4	□	1	Spray ball assembly (drilled)	Spare part	TE75Q592	
	□	1	Spray ball assembly (drilled)	Spare part		TE75Q562
5		1	Housing 2" ISO	Spare part	TE75Q563	TE75Q563
6		1	Piston	Spare part	TE75P544	TE75P544
7		1	Piston Spacer	Spare part	TE75P545	TE75P545
8		1	Spring	Spare part	TE75P572	TE75P572
9	□	1	Orientation Screw	Spare part	N/A	TE75P502
10	⊙	1	Retaining Ring	Spare part	TE75P587	TE75P587
11	⊙	1	Spring Pin	Spare part	TE75P552	TE75P552
12		1	Magnet	Spare part	TE75P504	TE75P504
13		1	Mounting Clamp 2" ISO	Spare part	TE75P505	TE75P505
14		1	Body Clamp DIN 40	Spare part	TE75P506	TE75P506
17	⊙	1	Home Chamber/Spigot Seal	Wear part	TE75P508	TE75P508
18	⊙	1	Home Chamber/Stem Seal	Wear part	TE75P509	TE75P509
19	⊙	1	Gasket-Home Chamber Mounting Flange	Spare part	TE75P550	TE75P550
20		1	Solid Gasket Spacer Ring	Spare part	TE75P573	TE75P573
21	⊙	1	Stem Product Seal	Wear part	TE75P543	TE75P543
22	⊙	1	Home Chamber/Sleeve Seal	Wear part	TE75P574	TE75P574
23	⊙	1	Piston/Stem Seal	Wear part	TE75P575	TE75P575
24	⊙	1	Piston Slide Ring	Wear part	TE75P514	TE75P514
25	⊙	1	Piston Seal	Wear part	TE75P586	TE75P586
26	⊙	1	Energising O-Ring	Wear part	TE75P546	TE75P546
27	⊙	2	O-Ring	Wear part	TE75P511	TE75P511
28	⊙	1	Ball Securing Pin	Spare part	TE75P555	TE75P555

Service kits

Service kit Standard “Special Trim”	TE75P28594

[1)] Position 1 is not sold as single Spare part component. Only sold as part of a machine maintenance/repair order. For further information please contact Alfa Laval Customer Support.

□ Configuration according to delivery note/order.

Parts marked with ⊙ are included in the Service kit Standard “Special Trim” TE75P030-04, TE75P031-04, TE75P050-04, TE75P051-04, TE75Q030-04, TE75Q031-04, TE75Q050-04 and TE75Q051-04: TE75P28594.
The Service Kit comprises of a full set of replacement seals, a new circlip and new roll pin. All the parts necessary to carry out a service or repair to the seals are included.
If the unit is fitted with our ‘Special Trim’ seals due to aggressive product or cleaning liquid, the service kit required is part number TE75P28594.
The seal materials are FFKM (Perfluoroclastomer) and carbon filled PTFE.

Not manufactured anymore

1.7

Alfa Laval SSB Retractor Stroke 60 Air-to-Spring

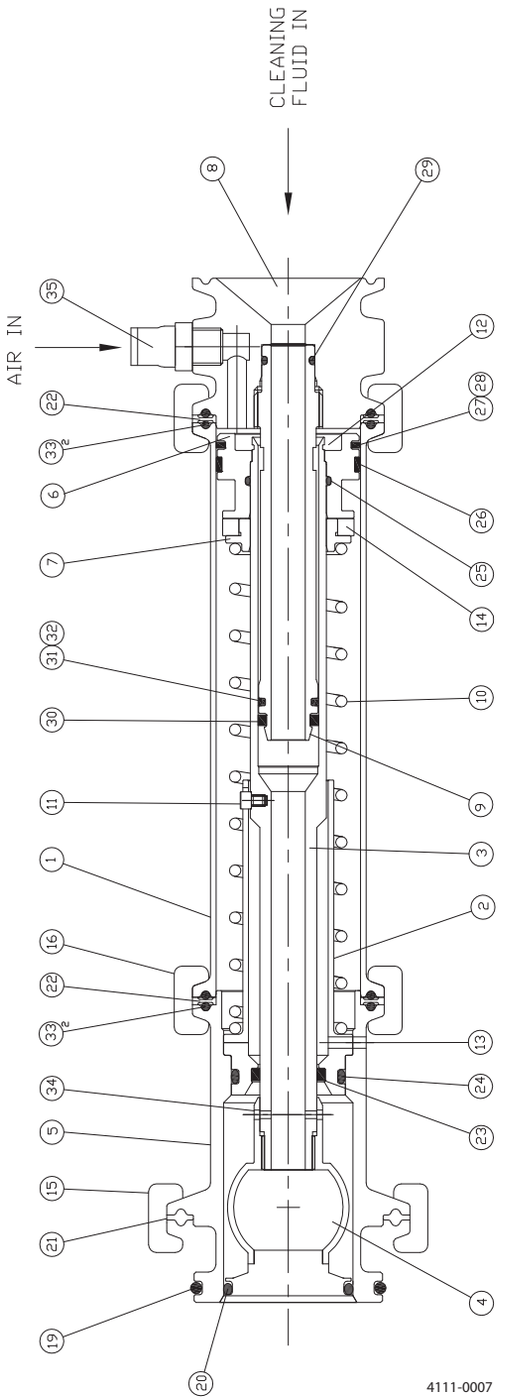

Pos		Qty	Denomination	Remark	TE75P230	TE75P230-04	TE75P250	TE75P250-04
Alfa Laval SSB Retractor Stroke 60 Air-to-Spring								
1		1	Body Tube[1)]					
2		1	Sleeve	Spare Part	TE75P558	TE75P558	TE75P558	TE75P558
3		1	Spray Stem	Spare Part	TE75P559	TE75P559	TE75P559	TE75P559
4	□	1	Spray ball assembly (drilled)	Spare Part	TE75P592	TE75P592		
	□	1	Spray ball assembly (drilled)	Spare Part			TE75P562	TE75P562
5		1	Housing 2" ISO	Spare Part	TE75P563	TE75P563	TE75P563	TE75P563
6		1	Piston	Spare Part	TE75P544	TE75P544	TE75P544	TE75P544
7		1	Piston Spacer	Spare Part	TE75P545	TE75P545	TE75P545	TE75P545
8		1	Inlet Adaptor	Spare Part	TE75P560	TE75P560	TE75P560	TE75P560
9		1	Adaptor Stem	Spare Part	TE75P557	TE75P557	TE75P557	TE75P557
10		1	Spring	Spare Part	TE75P561	TE75P561	TE75P561	TE75P561
11	□	1	Orientation Screw	Spare Part	N/A	N/A	TE75P502	TE75P502
12	♦⊙	1	Retaining Ring	Spare Part	TE75P587	TE75P587	TE75P587	TE75P587
13	♦⊙	1	Spring Pin	Spare Part	TE75P552	TE75P552	TE75P552	TE75P552
14		1	Magnet	Spare Part	TE75P504	TE75P504	TE75P504	TE75P504
15		1	Mounting Clamp 2" ISO	Spare Part	TE75P505	TE75P505	TE75P505	TE75P505
16		2	Body Clamp DIN 40	Spare Part	TE75P506	TE75P506	TE75P506	TE75P506
19	□♦	1	Home Chamber/Spigot Seal, (EPDM)	Wear Part	TE75P538		TE75P538	
	□⊙	1	Home Chamber/Spigot Seal, (FFKM)	Wear Part		TE75P508		TE75P508
20	□♦	1	Home Chamber/Stem Seal, (EPDM)	Wear Part	TE75P539		TE75P539	
	□⊙	1	Home Chamber/Stem Seal	Wear Part		TE75P509		TE75P509
21	♦⊙	1	Gasket-Home Chamber Mounting Flange	Spare Part	TE75P550	TE75P550	TE75P550	TE75P550
22		2	Solid Gasket Spacer Ring	Spare Part	TE75P573	TE75P573	TE75P573	TE75P573
23	♦⊙	1	Stem Product Seal	Wear Part	TE75P543	TE75P543	TE75P543	TE75P543
24	□♦	1	Home Chamber/Sleeve Seal, (EPDM)	Wear Part	TE75P540		TE75P540	
	□⊙	1	Home Chamber/Sleeve Seal, (FFKM)	Wear Part		TE75P574		TE75P574
25	□♦⊙	1	Piston/Stem Seal, (EPDM)	Wear Part	TE75P541	TE75P541	TE75P541	TE75P541
26	♦⊙	1	Piston Slide Ring	Wear Part	TE75P514	TE75P514	TE75P514	TE75P514
27	♦⊙	1	Piston Seal	Wear Part	TE75P515	TE75P515	TE75P515	TE75P515
28	□♦⊙	1	Energising O-Ring, (EPDM)	Wear Part	TE75P516	TE75P516	TE75P516	TE75P516
29	□♦	1	Adaptor/Stem Seal, (EPDM)	Wear Part	TE75P542		TE75P542	
	□⊙	1	Adaptor/Stem Seal, (FFKM)	Wear Part		TE75P576		TE75P576
30	♦⊙	1	Adaptor Product Seal	Wear Part	TE75P517	TE75P517	TE75P517	TE75P517
31	♦⊙	1	Adaptor Air Seal	Wear Part	TE75P518	TE75P518	TE75P518	TE75P518
32	□♦	1	Energising O-Ring, (EPDM)	Wear Part	TE75P519		TE75P519	
	□⊙	1	Energising O-Ring, (FFKM)	Wear Part		TE75P549		TE75P549
33	♦⊙	4	O-Ring	Wear Part	TE75P511	TE75P511	TE75P511	TE75P511
34	♦⊙	1	Ball Securing Pin	Spare Part	TE75P555	TE75P555	TE75P555	TE75P555
35		1	Air Connector	Spare Part	TE75P523	TE75P523	TE75P523	TE75P523

Service kits

♦	**Service kit Standard**	**TE75P28790**
⊙	**Service kit Standard "Special Trim"**	**TE75P28794**

[1)] Position 1 is not sold as single spare part component. Only sold as part of a machine maintenance/repair order. For further information please contact Alfa Laval Customer Support.

□ Configuration according to delivery note/order.

Parts marked with ◆ are included in the Service Kit Standard for TE75P230, TE75P231, TE75P250 and TE75P251: TE75P28790.
The Service Kit comprises of a full set of replacement seals, a new circlip and new roll pin. All the parts necessary to carry out a service or repair to the seals are included. The Standard Service Kit seal materials are EPDM and carbon filled PTFE.

Parts marked with ⊙ are included in the Service kit Standard "Special Trim" TE75P230-04, TE75P231-04, TE75P250-04, TE75P251-04, TE75Q230-04, TE75Q231-04, TE75Q250-04 and TE75Q251-04: TE75P28794.
The Service Kit comprises of a full set of replacement seals, a new circlip and new roll pin. All the parts necessary to carry out a service or repair to the seals are included.
If the unit is fitted with our 'Special Trim' seals due to aggressive product or cleaning liquid, the service kit required is part number TE75P28794. The seal materials are FFKM (Perfluoroclastomer) and carbon filled PTFE.

1.7

Alfa Laval SSB Retractor Stroke 60 Air-to-Spring Hastelloy

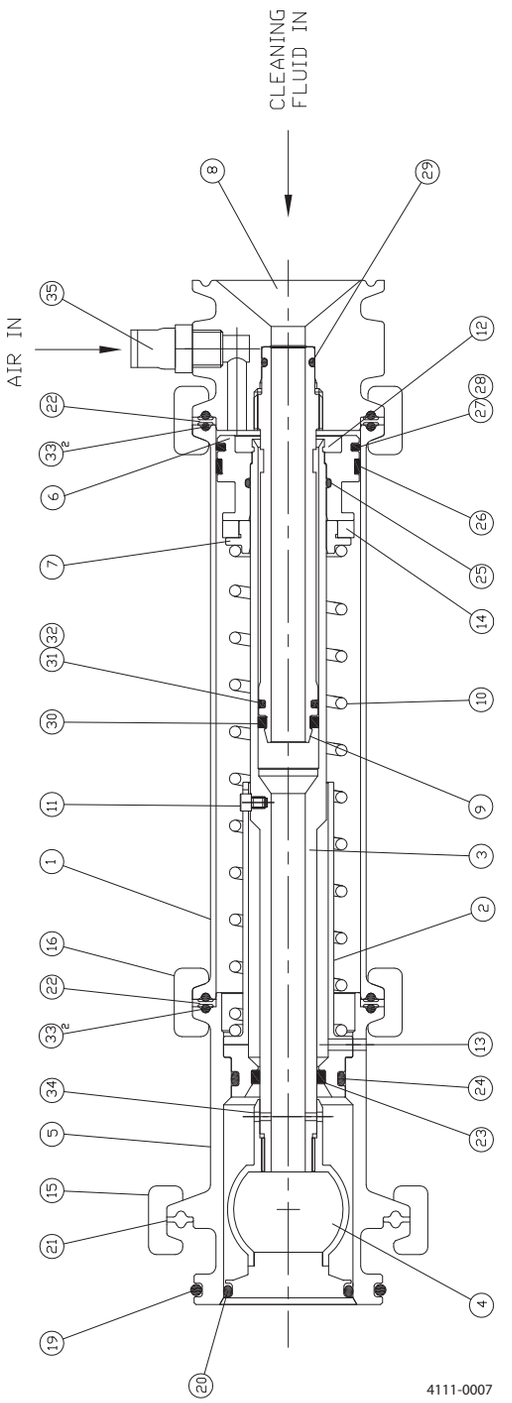

Pos		Qty	Denomination	Remark	TE75Q230-04	TE75Q250-04
Alfa Laval SSB Retractor Stroke 60 Air-to-Spring Hastelloy						
1		1	Body Tube[1)]			
2		1	Sleeve	Spare part	TE75P558	TE75P558
3		1	Spray Stem	Spare part	TE75P559	TE75P559
4	□	1	Spray ball assembly (drilled)	Spare part	TE75Q592	
	□	1	Spray ball assembly (drilled)	Spare part		TE75Q562
5		1	Housing 2" ISO	Spare part	TE75Q563	TE75Q563
6		1	Piston	Spare part	TE75P544	TE75P544
7		1	Piston Spacer	Spare part	TE75P545	TE75P545
8		1	Inlet Adaptor	Spare part	TE75P560	TE75P560
9		1	Adaptor Stem	Spare part	TE75P557	TE75P557
10		1	Spring	Spare part	TE75P561	TE75P561
11	□	1	Orientation Screw	Spare part	N/A	TE75P502
12	⊙	1	Retaining Ring	Spare part	TE75P587	TE75P587
13	⊙	1	Spring Pin	Spare part	TE75P552	TE75P552
14		1	Magnet	Spare part	TE75P504	TE75P504
15		1	Mounting Clamp 2" ISO	Spare part	TE75P505	TE75P505
16		2	Body Clamp DIN 40	Spare part	TE75P506	TE75P506
19	⊙	1	Home Chamber/Spigot Seal	Wear part	TE75P508	TE75P508
20	⊙	1	Home Chamber/Stem Seal	Wear part	TE75P509	TE75P509
21	⊙	1	Gasket-Home Chamber Mounting Flange	Spare part	TE75P550	TE75P550
22		2	Solid Gasket Spacer Ring	Spare part	TE75P573	TE75P573
23	⊙	1	Stem Product Seal	Wear part	TE75P543	TE75P543
24	⊙	1	Home Chamber/Sleeve Seal	Wear part	TE75P574	TE75P574
25	⊙	1	Piston/Stem Seal	Wear part	TE75P541	TE75P541
26	⊙	1	Piston Slide Ring	Wear part	TE75P514	TE75P514
27	⊙	1	Piston Seal	Wear part	TE75P515	TE75P515
28	⊙	1	Energising O-Ring	Wear part	TE75P516	TE75P516
29	⊙	1	Adaptor/Stem Seal	Wear part	TE75P576	TE75P576
30	⊙	1	Adaptor Product Seal	Wear part	TE75P517	TE75P517
31	⊙	1	Adaptor Air Seal	Wear part	TE75P518	TE75P518
32	⊙	1	Energising O-Ring	Wear part	TE75P549	TE75P549
33	⊙	4	O-Ring	Wear part	TE75P511	TE75P511
34	⊙	1	Ball Securing Pin	Spare part	TE75P555	TE75P555
35		1	Air Connector	Spare part	TE75P523	TE75P523

Service kits

⊙	**Service kit Standard “Special Trim”**	**TE75P28794**

[1)] Position 1 is not sold as single Spare part component. Only sold as part of a machine maintenance/repair order. For further information please contact Alfa Laval Customer Support.

Parts marked with ⊙ are included in the Service kit Standard “Special Trim” TE75P230-04, TE75P231-04, TE75P250-04, TE75P251-04, TE75Q230-04, TE75Q231-04, TE75Q250-04 & TE75Q251-04: TE75P28794.
The Service Kit comprises of a full set of replacement seals, a new circlip and new roll pin. All the parts necessary to carry out a service or repair to the seals are included.
If the unit is fitted with our ‘Special Trim’ seals due to aggressive product or cleaning liquid, the service kit required is part number TE75P28794.
The seal materials are FFKM (Perfluoroclastomer) and carbon filled PTFE.

1.7

Alfa Laval SSB Retractor Stroke 120 Air-to-Spring

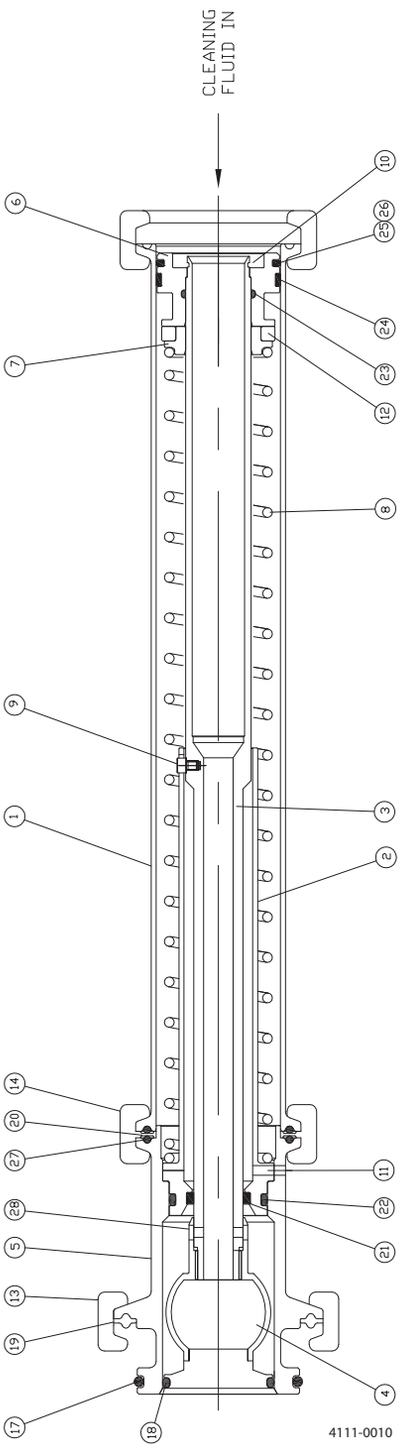

Pos		Qty	Denomination	Remark	TE75P231	TE75P231-04	TE75P251	TE75P251-04
Alfa Laval SSB Retractor Stroke 120 Air-to-Spring								
1		1	Body Tube[1)]					
2		1	Sleeve	Spare Part	TE75P558	TE75P558	TE75P558	TE75P558
3		1	Spray Stem	Spare Part	TE75P559	TE75P559	TE75P559	TE75P559
4	□	1	Spray ball assembly (drilled)	Spare Part	TE75P592	TE75P592		
	□	1	Spray ball assembly (drilled)	Spare Part			TE75P562	TE75P562
5		1	Housing 2" ISO	Spare Part	TE75P563	TE75P563	TE75P563	TE75P563
6		1	Piston	Spare Part	TE75P544	TE75P544	TE75P544	TE75P544
7		1	Piston Spacer	Spare Part	TE75P545	TE75P545	TE75P545	TE75P545
8		1	Inlet Adaptor	Spare Part	TE75P560	TE75P560	TE75P560	TE75P560
9		1	Adaptor Stem	Spare Part	TE75P557	TE75P557	TE75P557	TE75P557
10		1	Spring	Spare Part	TE75P561	TE75P561	TE75P561	TE75P561
11	□	1	Orientation Screw	Spare Part	N/A	N/A	TE75P502	TE75P502
12	♦⊙	1	Retaining Ring	Spare Part	TE75P587	TE75P587	TE75P587	TE75P587
13	♦⊙	1	Spring Pin	Spare Part	TE75P552	TE75P552	TE75P552	TE75P552
14		1	Magnet	Spare Part	TE75P504	TE75P504	TE75P504	TE75P504
15		1	Mounting Clamp 2" ISO	Spare Part	TE75P505	TE75P505	TE75P505	TE75P505
16		2	Body Clamp DIN 40	Spare Part	TE75P506	TE75P506	TE75P506	TE75P506
19	□♦	1	Home Chamber/Spigot Seal, (EPDM)	Wear Part	TE75P538		TE75P538	
	□⊙	1	Home Chamber/Spigot Seal, (FFKM)	Wear Part		TE75P508		TE75P508
20	□♦	1	Home Chamber/Stem Seal, (EPDM)	Wear Part	TE75P539		TE75P539	
	□⊙	1	Home Chamber/Stem Seal	Wear Part		TE75P509		TE75P509
21	♦⊙	1	Gasket-Home Chamber Mounting Flange	Spare Part	TE75P550	TE75P550	TE75P550	TE75P550
22		2	Solid Gasket Spacer Ring	Spare Part	TE75P573	TE75P573	TE75P573	TE75P573
23	♦⊙	1	Stem Product Seal	Wear Part	TE75P543	TE75P543	TE75P543	TE75P543
24	□♦	1	Home Chamber/Sleeve Seal, (EPDM)	Wear Part	TE75P540		TE75P540	
	□⊙	1	Home Chamber/Sleeve Seal, (FFKM)	Wear Part		TE75P574		TE75P574
25	□♦⊙	1	Piston/Stem Seal, (EPDM)	Wear Part	TE75P541	TE75P541	TE75P541	TE75P541
26	♦⊙	1	Piston Slide Ring	Wear Part	TE75P514	TE75P514	TE75P514	TE75P514
27	♦⊙	1	Piston Seal	Wear Part	TE75P515	TE75P515	TE75P515	TE75P515
28	□♦⊙	1	Energising O-Ring, (EPDM)	Wear Part	TE75P516	TE75P516	TE75P516	TE75P516
29	□♦	1	Adaptor/Stem Seal, (EPDM)	Wear Part	TE75P542		TE75P542	
	□⊙	1	Adaptor/Stem Seal, (FFKM)	Wear Part		TE75P576		TE75P576
30	♦⊙	1	Adaptor Product Seal	Wear Part	TE75P517	TE75P517	TE75P517	TE75P517
31	♦⊙	1	Adaptor Air Seal	Wear Part	TE75P518	TE75P518	TE75P518	TE75P518
32	□♦	1	Energising O-Ring, (EPDM)	Wear Part	TE75P519		TE75P519	
	□⊙	1	Energising O-Ring, (FFKM)	Wear Part		TE75P549		TE75P549
33	♦⊙	4	O-Ring	Wear Part	TE75P511	TE75P511	TE75P511	TE75P511
34	♦⊙	1	Ball Securing Pin	Spare Part	TE75P555	TE75P555	TE75P555	TE75P555
35		1	Air Connector	Spare Part	TE75P523	TE75P523	TE75P523	TE75P523

Service kits

♦	**Service kit Standard**	**TE75P28790**
⊙	**Service kit Standard "Special Trim"**	**TE75P28794**

[1)] Position 1 is not sold as single spare part component. Only sold as part of a machine maintenance/repair order. For further information please contact Alfa Laval Customer Support.

□ Configuration according to delivery note/order.

Parts marked with ◆ are included in the Service Kit Standard for TE75P230, TE75P231, TE75P250 & TE75P251: TE75P28790.
The Service Kit comprises of a full set of replacement seals, a new circlip and new roll pin. All the parts necessary to carry out a service or repair to the seals are included. The Standard Service Kit seal materials are EPDM and carbon filled PTFE.

Parts marked with ⊙ are included in the Service kit Standard "Special Trim" TE75P230-04, TE75P231-04, TE75P250-04, TE75P251-04, TE75Q230-04, TE75Q231-04, TE75Q250-04 & TE75Q251-04: TE75P28794.
The Service Kit comprises of a full set of replacement seals, a new circlip and new roll pin. All the parts necessary to carry out a service or repair to the seals are included.
If the unit is fitted with our 'Special Trim' seals due to aggressive product or cleaning liquid, the service kit required is part number TE75P28794. The seal materials are FFKM (Perfluoroclastomer) and carbon filled PTFE.

1.7

Alfa Laval SSB Retractor Stroke 120 Air-to-Spring Hastelloy

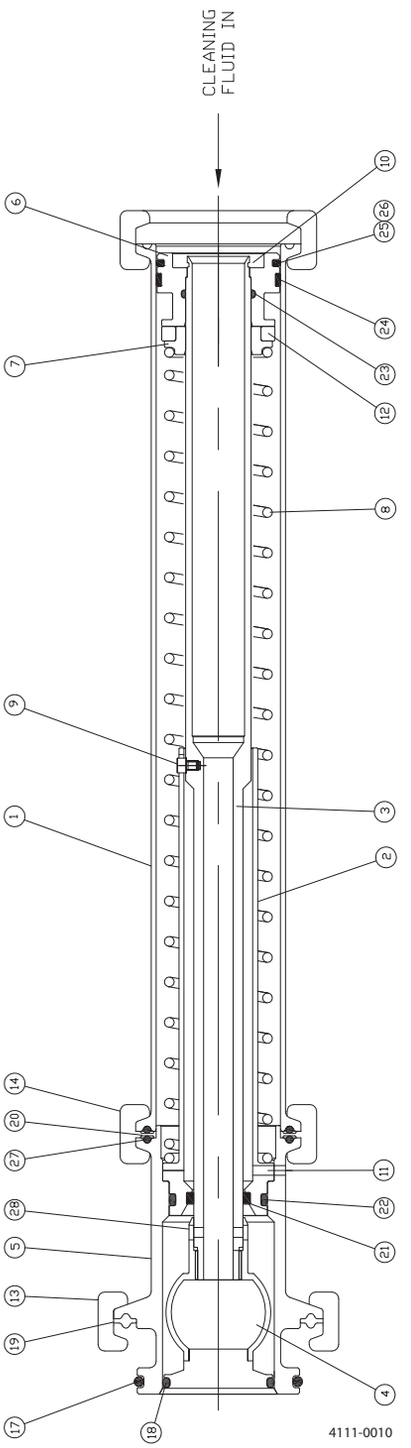

Pos		Qty	Denomination	Remark	TE75Q231-04	TE75Q251-04
Alfa Laval SSB Retractor Stroke 120 Air-to-Spring Hastelloy						
1		1	Body Tube[1)]			
2		1	Sleeve	Spare part	TE75P569	TE75P569
3		1	Spray Stem	Spare part	TE75P570	TE75P570
4	□	1	Spray ball assembly (drilled)	Spare part	TE75Q592	
	□	1	Spray ball assembly (drilled)	Spare part		TE75Q562
5		1	Housing 2" ISO	Spare part	TE75Q563	TE75Q563
6		1	Piston	Spare part	TE75P544	TE75P544
7		1	Piston Spacer	Spare part	TE75P545	TE75P545
8		1	Inlet Adaptor	Spare part	TE75P560	TE75P560
9		1	Adaptor Stem	Spare part	TE75P568	TE75P568
10		1	Spring	Spare part	TE75P572	TE75P572
11	□	1	Orientation Screw	Spare part	N/A	TE75P502
12	⊙	1	Retaining Ring	Spare part	TE75P587	TE75P587
13	⊙	1	Spring Pin	Spare part	TE75P552	TE75P552
14		1	Magnet	Spare part	TE75P504	TE75P504
15		1	Mounting Clamp 2" ISO	Spare part	TE75P505	TE75P505
16		2	Body Clamp DIN 40	Spare part	TE75P506	TE75P506
19	⊙	1	Home Chamber/Spigot Seal	Wear part	TE75P508	TE75P508
20	⊙	1	Home Chamber/Stem Seal	Wear part	TE75P509	TE75P509
21	⊙	1	Gasket-Home Chamber Mounting Flange	Spare part	TE75P550	TE75P550
22		2	Solid Gasket Spacer Ring	Spare part	TE75P573	TE75P573
23	⊙	1	Stem Product Seal	Wear part	TE75P543	TE75P543
24	⊙	1	Home Chamber/Sleeve Seal	Wear part	TE75P574	TE75P574
25	⊙	1	Piston/Stem Seal	Wear part	TE75P541	TE75P541
26	⊙	1	Piston Slide Ring	Wear part	TE75P514	TE75P514
27	⊙	1	Piston Seal	Wear part	TE75P515	TE75P515
28	⊙	1	Energising O-Ring	Wear part	TE75P516	TE75P516
29	⊙	1	Adaptor/Stem Seal	Wear part	TE75P576	TE75P576
30	⊙	1	Adaptor Product Seal	Wear part	TE75P517	TE75P517
31	⊙	1	Adaptor Air Seal	Wear part	TE75P518	TE75P518
32	⊙	1	Energising O-Ring	Wear part	TE75P549	TE75P549
33	⊙	4	O-Ring	Wear part	TE75P511	TE75P511
34	⊙	1	Ball Securing Pin	Spare part	TE75P555	TE75P555
35		1	Air Connector	Spare part	TE75P523	TE75P523

Service kits

⊙	**Service kit Standard “Special Trim”**	**TE75P28794**

[1)] Position 1 is not sold as single Spare part component. Only sold as part of a machine maintenance/repair order. For further information please contact Alfa Laval Customer Support.

□ Configuration according to delivery note/order.

Parts marked with ⊙ are included in the Service kit Standard “Special Trim” TE75P230-04, TE75P231-04, TE75P250-04, TE75P251-04, TE75Q230-04, TE75Q231-04, TE75Q250-04 & TE75Q251-04: TE75P28794.
The Service Kit comprises of a full set of replacement seals, a new circlip and new roll pin. All the parts necessary to carry out a service or repair to the seals are included.
If the unit is fitted with our ‘Special Trim’ seals due to aggressive product or cleaning liquid, the service kit required is part number TE75P28794.
The seal materials are FFKM (Perfluoroclastomer) and carbon filled PTFE.

1.7

Alfa Laval SSB Retractor Stroke 60 Air-to-Air

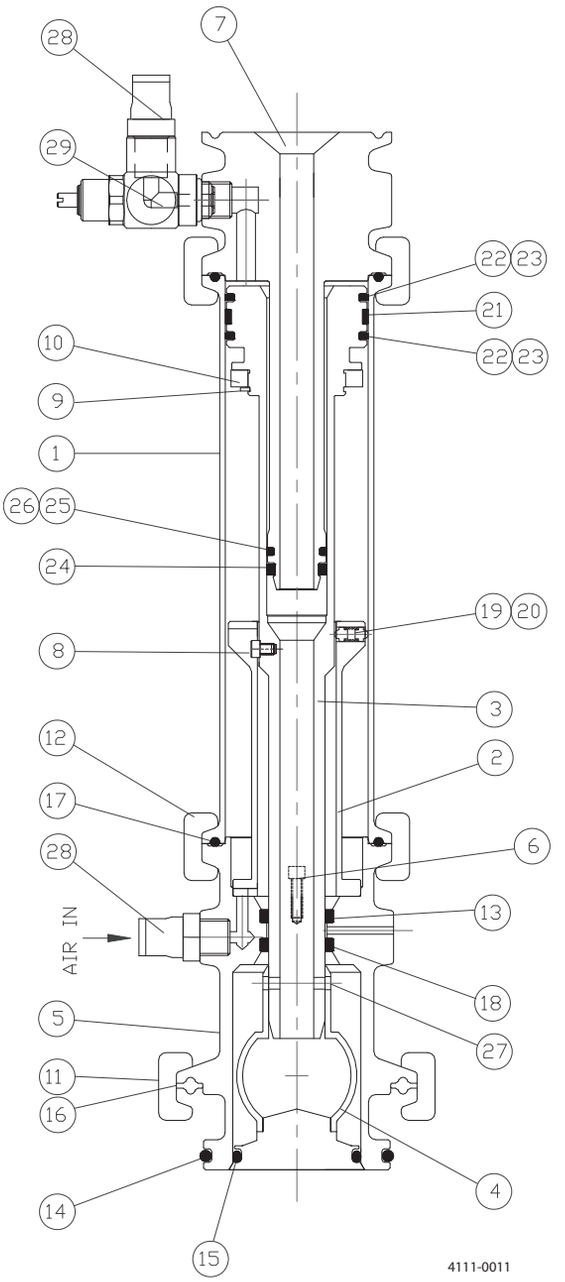

Pos		Qty	Denomination	Remark	TE75P130	TE75P130-04	TE75P150	TE75P150-04
Alfa Laval SSB Retractor Stroke 60 Air-to-Air								
1		1	Body Tube[1)]					
2		1	Orientation and Stop Body	Spare Part	TE75P525	TE75P525	TE75P525	TE75P525
3		1	Spray Stem	Spare Part	TE75P580	TE75P580	TE75P580	TE75P580
4	□	1	Spray ball assembly (drilled)	Spare Part				
	□	1	Spray ball assembly (drilled)	Spare Part				
5		1	Housing 2" ISO	Spare Part	TE75P583	TE75P583	TE75P583	TE75P583
6		2	M3 x 10 socket cap head screw	Spare Part	TE75P522	TE75P522	TE75P522	TE75P522
7		1	Inlet Adaptor	Spare Part	TE75P582	TE75P582	TE75P582	TE75P582
8		1	Orientation Screw	Spare Part	TE75P502	TE75P502	TE75P502	TE75P502
9	◆⊙	1	External Circlip	Spare Part	TE75P503	TE75P503	TE75P503	TE75P503
10		1	Magnet	Spare Part	TE75P504	TE75P504	TE75P504	TE75P504
11		1	Mounting Clamp	Spare Part	TE75P505	TE75P505	TE75P505	TE75P505
12		2	Body Clamp	Spare Part	TE75P506	TE75P506	TE75P506	TE75P506
13	◆⊙	1	Home Chamber/Stem Seal	Wear Part	TE75P512	TE75P512	TE75P512	TE75P512
14	□◆	1	Home Chamber/Spigot Seal, EPDM	Wear Part	TE75P538		TE75P538	
	□⊙	1	Home Chamber/Spigot Seal, FFKM	Wear Part		TE75P508		TE75P508
15	□◆	1	Home Chamber/Stem Seal, EPDM	Wear Part	TE75P539		TE75P539	
	□⊙	1	Home Chamber/Stem Seal, FFKM	Wear Part		TE75P509		TE75P509
16	◆⊙	1	Gasket Home Chamber	Spare Part	TE75P550	TE75P550	TE75P550	TE75P550
17	◆⊙	2	O-Ring	Wear Part	TE75P511	TE75P511	TE75P511	TE75P511
18	◆⊙	1	Stem Product Seal	Wear Part	TE75P513	TE75P513	TE75P513	TE75P513
19		2	Earth Contacts	Spare Part	TE75P501	TE75P501	TE75P501	TE75P501
20		1	Earth Contact Spring	Spare Part	TE75P500	TE75P500	TE75P500	TE75P500
21	◆⊙	1	Piston Slide Ring	Wear Part	TE75P514	TE75P514	TE75P514	TE75P514
22	◆⊙	2	Piston Seal	Wear Part	TE75P515	TE75P515	TE75P515	TE75P515
23	□◆	2	Energising O-Ring, EPDM	Wear Part	TE75P516		TE75P516	
	□⊙	2	Energising O-Ring, FFKM	Wear Part		TE75P546		TE75P546
24	◆⊙	1	Adaptor Product Seal	Wear Part	TE75P517	TE75P517	TE75P517	TE75P517
25	◆⊙	1	Adaptor Air Seal	Wear Part	TE75P518	TE75P518	TE75P518	TE75P518
26	□◆	1	Energising O-Ring, EPDM	Wear Part	TE75P519		TE75P519	
	□⊙	1	Energising O-Ring, FFKM	Wear Part		TE75P549		TE75P549
27	◆⊙	1	Ball Securing Pin	Spare Part	TE75P520	TE75P520	TE75P520	TE75P520
28		1	Air Connector	Spare Part	TE75P523	TE75P523	TE75P523	TE75P523
29		1	Air Flow Restrictor	Spare Part	TE75P521	TE75P521	TE75P521	TE75P521

Service kits

Service kit Standard	TE75P28990
Service kit Standard “Special Trim”	TE75P28994

[1)] Position 1 is not sold as single spare part component. Only sold as part of a machine maintenance/repair order. For further information please contact Alfa Laval Customer Support.

□ Configuration according to delivery note/order.

Parts marked with ◆ are included in the Service Kit Standard for TE75P130, TE75P131, TE75P150 and TE75P151: TE75P28990.
The Service Kit comprises of a full set of replacement seals, a new circlip and new roll pin. All the parts necessary to carry out a service or repair to the seals are included. The Standard Service Kit seal materials are EPDM and carbon filled PTFE.

Parts marked with ⊙ are included in the Service kit Standard “Special Trim” TE75P130-04, TE75P131-04, TE75P150-04, TE75P151-04, TE75Q130-04, TE75Q131-04, TE75Q150-04 and TE75Q151-04: TE75P28994.
The Service Kit comprises of a full set of replacement seals, a new circlip and new roll pin. All the parts necessary to carry out a service or repair to the seals are included.
If the unit is fitted with our ‘Special Trim’ seals due to aggressive product or cleaning liquid, the service kit required is part number TE75P28994. The seal materials are FFKM (Perfluoroclastomer) and carbon filled PTFE.

Not manufactured anymore

1.7

Alfa Laval SSB Retractor Stroke 60 Air-to-Air Hastelloy

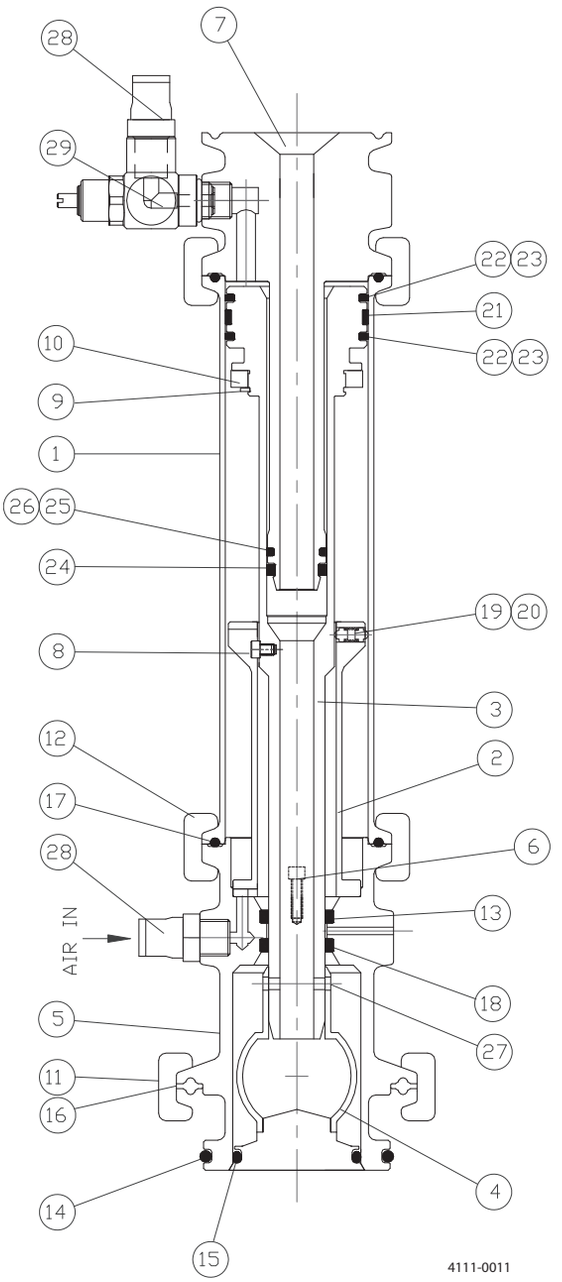

Pos		Qty	Denomination	Remark	TE75Q130-04	TE75Q150-04
Alfa Laval SSB Retractor Stroke 60 Air-to-Air, Hastelloy						
1		1	Body Tube[1)]			
2		1	Orientation and Stop Body	Spare part	TE75P525	TE75P525
3		1	Spray Stem	Spare part	TE75P580	TE75P580
4	□	1	Spray ball assembly (drilled)	Spare part		
	□	1	Spray ball assembly (drilled)	Spare part		
5		1	Housing 2" ISO	Spare part	TE75Q583	TE75Q583
6		2	M3 x 10 socket cap head screw	Spare part	TE75P522	TE75P522
7		1	Inlet Adaptor	Spare part	TE75P582	TE75P582
8		1	Orientation Screw	Spare part	TE75P502	TE75P502
9	⊙	1	External Circlip	Spare part	TE75P503	TE75P503
10		1	Magnet	Spare part	TE75P504	TE75P504
11		1	Mounting Clamp	Spare part	TE75P505	TE75P505
12		2	Body Clamp	Spare part	TE75P506	TE75P506
13	⊙	1	Home Chamber/Stem Seal	Wear part	TE75P512	TE75P512
14	⊙	1	Home Chamber/Spigot Seal	Wear part	TE75P508	TE75P508
15	⊙	1	Home Chamber/Stem Seal	Wear part	TE75P509	TE75P509
16	⊙	1	Gasket Home Chamber	Spare part	TE75P550	TE75P550
17	⊙	2	O-Ring	Wear part	TE75P511	TE75P511
18	⊙	1	Stem Product Seal	Wear part	TE75P513	TE75P513
19		2	Earth Contacts	Spare part	TE75P501	TE75P501
20		1	Earth Contact Spring	Spare part	TE75P500	TE75P500
21	⊙	1	Piston Slide Ring	Wear part	TE75P514	TE75P514
22	⊙	2	Piston Seal	Wear part	TE75P515	TE75P515
23	⊙	2	Energising O-Ring	Wear part	TE75P546	TE75P546
24	⊙	1	Adaptor Product Seal	Wear part	TE75P517	TE75P517
25	⊙	1	Adaptor Air Seal	Wear part	TE75P518	TE75P518
26	⊙	1	Energising O-Ring	Wear part	TE75P549	TE75P549
27	⊙	1	Ball Securing Pin	Spare part	TE75P520	TE75P520
28		1	Air Connector	Spare part	TE75P523	TE75P523
29		1	Air Flow Restrictor	Spare part	TE75P521	TE75P521

Service kits

Service kit Standard “Special Trim”	TE75P28994

[1)] Position 1 is not sold as single Spare part component. Only sold as part of a machine maintenance/repair order. For further information please contact Alfa Laval Customer Support.

□ Configuration according to delivery note/order.

Parts marked with ⊙ are included in the Service kit Standard “Special Trim” TE75P130-04, TE75P131-04, TE75P150-04, TE75P151-04, TE75Q130-04, TE75Q131-04, TE75Q150-04 and TE75Q151-04: TE75P28994.
The Service Kit comprises of a full set of replacement seals, a new circlip and new roll pin. All the parts necessary to carry out a service or repair to the seals are included.
If the unit is fitted with our ‘Special Trim’ seals due to aggressive product or cleaning liquid, the service kit required is part number TE75P28904. The seal materials are FFKM (Perfluoroclastomer) and carbon filled PTFE.

1.7

Alfa Laval SSB Retractor Stroke 120 Air-to-Air

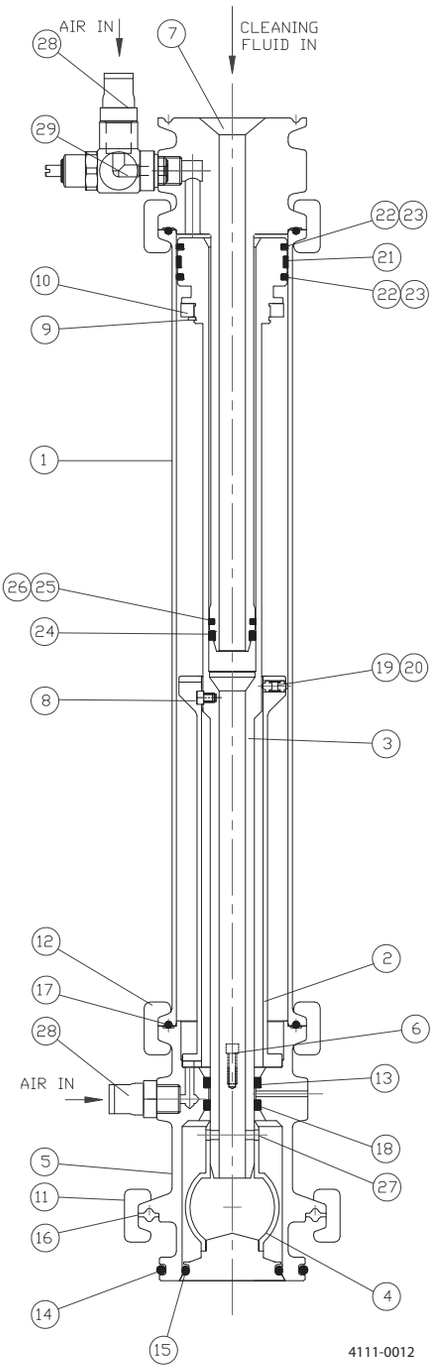

Pos		Qty	Denomination	Remark	TE75P131	TE75P131-04	TE75P151	TE75P151-04
Alfa Laval SSB Retractor Stroke 120 Air-to-Air								
1		1	Body Tube[1)]					
2		1	Orientation and Stop Body	Spare Part	TE75P524	TE75P524	TE75P524	TE75P524
3		1	Spray Stem	Spare Part	TE75P578	TE75P578	TE75P578	TE75P578
4	□	1	Spray ball assembly (drilled)	Spare Part				
	□	1	Spray ball assembly (drilled)	Spare Part				
5		1	Housing 2" ISO	Spare Part	TE75P583	TE75P583	TE75P583	TE75P583
6		2	M3 x 10 socket cap head screw	Spare Part	TE75P522	TE75P522	TE75P522	TE75P522
7		1	Inlet Adaptor	Spare Part	TE75P581	TE75P581	TE75P581	TE75P581
8		1	Orientation Screw	Spare Part	TE75P502	TE75P502	TE75P502	TE75P502
9	◆⊙	1	External Circlip	Spare Part	TE75P503	TE75P503	TE75P503	TE75P503
10		1	Magnet	Spare Part	TE75P504	TE75P504	TE75P504	TE75P504
11		1	Mounting Clamp	Spare Part	TE75P505	TE75P505	TE75P505	TE75P505
12		2	Body Clamp	Spare Part	TE75P506	TE75P506	TE75P506	TE75P506
13	◆⊙	1	Home Chamber/Stem Seal	Wear Part	TE75P512	TE75P512	TE75P512	TE75P512
14	□◆	1	Home Chamber/Spigot Seal, EPDM	Wear Part	TE75P538		TE75P538	
	□⊙	1	Home Chamber/Spigot Seal, FFKM	Wear Part		TE75P508		TE75P508
15	□◆	1	Home Chamber/Stem Seal, EPDM	Wear Part	TE75P539		TE75P539	
	□⊙	1	Home Chamber/Stem Seal, FFKM	Wear Part		TE75P509		TE75P509
16	◆⊙	1	Gasket Home Chamber	Spare Part	TE75P550	TE75P550	TE75P550	TE75P550
17	◆⊙	2	O-Ring	Wear Part	TE75P511	TE75P511	TE75P511	TE75P511
18	◆⊙	1	Stem Product Seal	Wear Part	TE75P513	TE75P513	TE75P513	TE75P513
19		2	Earth Contacts	Spare Part	TE75P501	TE75P501	TE75P501	TE75P501
20		1	Earth Contact Spring	Spare Part	TE75P500	TE75P500	TE75P500	TE75P500
21	◆⊙	1	Piston Slide Ring	Wear Part	TE75P514	TE75P514	TE75P514	TE75P514
22	◆⊙	2	Piston Seal	Wear Part	TE75P515	TE75P515	TE75P515	TE75P515
23	□◆	2	Energising O-Ring, EPDM	Wear Part	TE75P516		TE75P516	
	□⊙	2	Energising O-Ring, FFKM	Wear Part		TE75P546		TE75P546
24	◆⊙	1	Adaptor Product Seal	Wear Part	TE75P517	TE75P517	TE75P517	TE75P517
25	◆⊙	1	Adaptor Air Seal	Wear Part	TE75P518	TE75P518	TE75P518	TE75P518
26	□◆	1	Energising O-Ring, EPDM	Wear Part	TE75P519		TE75P519	
	□⊙	1	Energising O-Ring, FFKM	Wear Part		TE75P549		TE75P549
27	◆⊙	1	Ball Securing Pin	Spare Part	TE75P520	TE75P520	TE75P520	TE75P520
28		1	Air Connector	Spare Part	TE75P523	TE75P523	TE75P523	TE75P523
29		1	Air Flow Restrictor	Spare Part	TE75P521	TE75P521	TE75P521	TE75P521

Service kits

Service kit Standard	TE75P28990
Service kit Standard “Special Trim”	TE75P28994

[1)] Position 1 is not sold as single spare part component. Only sold as part of a machine maintenance/repair order. For further information please contact Alfa Laval Customer Support.

□ Configuration according to delivery note/order.

Parts marked with ◆ are included in the Service Kit Standard for TE75P130, TE75P131, TE75P150 and TE75P151: TE75P28990.
The Service Kit comprises of a full set of replacement seals, a new circlip and new roll pin. All the parts necessary to carry out a service or repair to the seals are included. The Standard Service Kit seal materials are EPDM and carbon filled PTFE.

Parts marked with ⊙ are included in the Service kit Standard “Special Trim” TE75P130-04, TE75P131-04, TE75P150-04, TE75P151-04, TE75Q130-04, TE75Q131-04, TE75Q150-04 and TE75Q151-04: TE75P28994.
The Service Kit comprises of a full set of replacement seals, a new circlip and new roll pin. All the parts necessary to carry out a service or repair to the seals are included.
If the unit is fitted with our ‘Special Trim’ seals due to aggressive product or cleaning liquid, the service kit required is part number TE75P28994. The seal materials are FFKM (Perfluoroclastomer) and carbon filled PTFE.

1.7

Alfa Laval SSB Retractor Stroke 120 Air-to-Air Hastelloy

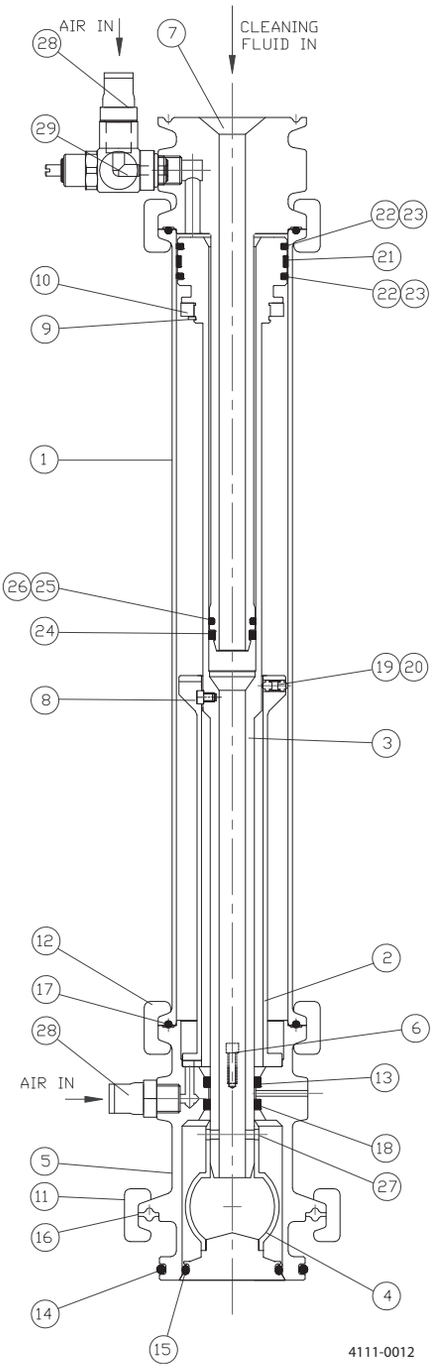

Pos		Qty	Denomination	Remark	TE75Q131-04	TE75Q151-04
Alfa Laval SSB Retractor Stroke 120 Air-to-Air, Hastelloy						
1		1	Body Tube[1)]			
2		1	Orientation and Stop Body	Spare Part	TE75P524	TE75P524
3		1	Spray Stem	Spare Part	TE75P578	TE75P578
4	□	1	Spray ball assembly (drilled)	Spare Part		
	□	1	Spray ball assembly (drilled)	Spare Part		
5		1	Housing 2" ISO	Spare Part	TE75Q583	TE75Q583
6		2	M3 x 10 socket cap head screw	Spare Part	TE75P522	TE75P522
7		1	Inlet Adaptor	Spare Part	TE75P581	TE75P581
8	□	1	Orientation Screw	Spare Part	N/A	TE75P502
9	⊙	1	External Circlip	Spare Part	TE75P503	TE75P503
10		1	Magnet	Spare Part	TE75P504	TE75P504
11		1	Mounting Clamp	Spare Part	TE75P505	TE75P505
12		2	Body Clamp	Spare Part	TE75P506	TE75P506
13	⊙	1	Home Chamber/Stem Seal	Wear Part	TE75P512	TE75P512
14	⊙	1	Home Chamber/Spigot Seal	Wear Part	TE75P508	TE75P508
15	⊙	1	Home Chamber/Stem Seal	Wear Part	TE75P509	TE75P509
16	⊙	1	Gasket Home Chamber	Spare Part	TE75P550	TE75P550
17	⊙	2	O-Ring	Wear Part	TE75P511	TE75P511
18	⊙	1	Stem Product Seal	Wear Part	TE75P513	TE75P513
19		2	Earth Contacts	Spare Part	TE75P501	TE75P501
20		1	Earth Contact Spring	Spare Part	TE75P500	TE75P500
21	⊙	1	Piston Slide Ring	Wear Part	TE75P514	TE75P514
22	⊙	2	Piston Seal	Wear Part	TE75P515	TE75P515
23	⊙	2	Energising O-Ring	Wear Part	TE75P546	TE75P546
24	⊙	1	Adaptor Product Seal	Wear Part	TE75P517	TE75P517
25	⊙	1	Adaptor Air Seal	Wear Part	TE75P518	TE75P518
26	⊙	1	Energising O-Ring	Wear Part	TE75P549	TE75P549
27	⊙	1	Ball Securing Pin	Spare Part	TE75P520	TE75P520
28		1	Air Connector	Spare Part	TE75P523	TE75P523
29		1	Air Flow Restrictor	Spare Part	TE75P521	TE75P521

Service kits

Service kit Standard “Special Trim”	TE75P28994

[1)] Position 1 is not sold as single spare part component. Only sold as part of a machine maintenance/repair order. For further information please contact Alfa Laval Customer Support.

□ Configuration according to delivery note/order.

Parts marked with ⊙ are included in the Service kit Standard “Special Trim” TE75P130-04, TE75P131-04, TE75P150-04, TE75P151-04, TE75Q130-04, TE75Q131-04, TE75Q150-04 and TE75Q151-04: TE75P28994.
The Service Kit comprises of a full set of replacement seals, a new circlip and new roll pin. All the parts necessary to carry out a service or repair to the seals are included.
If the unit is fitted with our ‘Special Trim’ seals due to aggressive product or cleaning liquid, the service kit required is part number TE75P28994. The seal materials are FFKM (Perfluoroclastomer) and carbon filled PTFE.

1.8 Tank accessories

Accessories for your tank.



Spare parts

Sight glass DIN11851 . . . . . 1.8.568
Sight glass DIN28120 . . . . . 1.8.570
D54MP sight glass 1.8.572
LKS Tank Sight Glass 1.8.574
LKS 105 Tank sight glass 1.8.576
LKTC Tank Leg with Base 1.8.578
LKGL-1 In-Line Sight Glass 1.8.580
LKGG-1 In-Line Sight Glass 1.8.582
In-Line Sight Glass 1.8.584
LKFL Fiatlux Sight Glass 1.8.586
MiniVISION 1.8.588

Spare parts for obsolete products

LKL Light Fitting 1.8.590
LKGL In-Line Sight Glass 1.8.592
LKGG In-Line Sight Glass 1.8.594

1.8

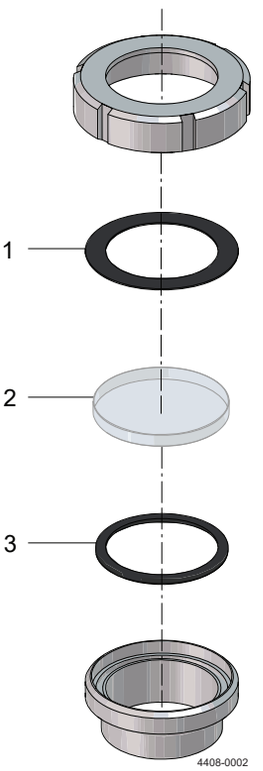

Pos	Qty	Denomination	DN50	DN65	DN80	DN100	DN125	DN150
1	1	Seal ring, PTFE	9611995981	9611993741	9611995982	9611993742	9611993743	9611995983
2	1	Glass	9611995984	9611993744	9611995985	9611993745	9611993746	9611995986
3	1	Seal ring, EPDM	9611991272	9611991273	9611991275	9611991276	9611991277	9611991278

(900707)

1.8

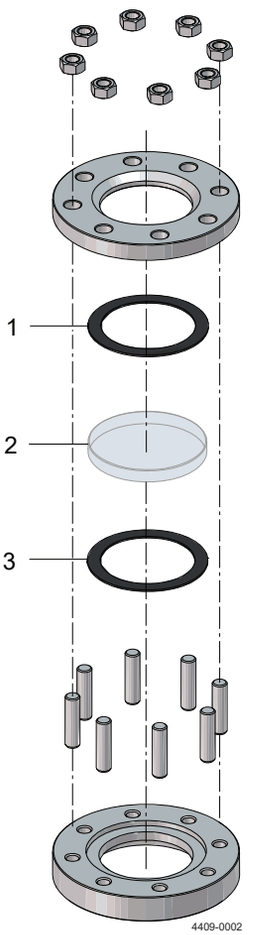

Pos	Qty	Denomination	DN50	DN80	DN100	DN125	DN150	DN200
1	1	Seal ring, Klingersil C4400 .	9611995972	9611995973	9611993732	9611993733	9611993734	9611995974
2	1	Glass	9611995975	9611995976	9611993735	9611993736	9611993737	9611995977
3	1	Seal ring, EPDM	9611995978	9611995979	9611993738	9611993739		9611995980

(900708)

1.8

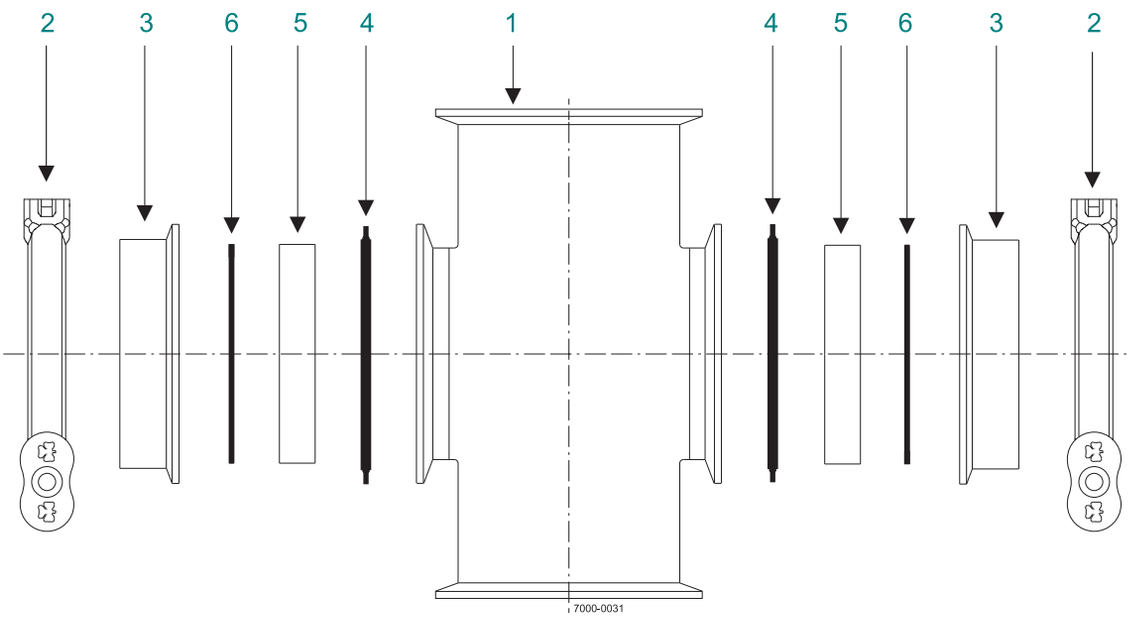

Pos		Qty	Denomination	1½"	2"	2½"	3"	4"
1		1	Body	NA	NA	NA	NA	NA
2		2	Clamp	212196	212196	212198	212198	212198
3		2	Containment Ferrule	620867	620867	620868	620868	620869
4	□	2	Gasket (Buna)	298453	298453	298455	298455	298456
	◆	2	Gasket (SFY)	290030	290030	290049	290049	290053
5		2	Pyrex Glass	620551	620551	620544	620544	620552
6	□	2	Containment Gasket (Buna)	290199	290199	290200	290200	290201
	◆	2	Containment Gasket (SFY)	290056	290056	290122	290122	290102

		1½"	2"	2½"	3"
□	Service Kit Buna	9613990614	9613990614	9613990616	9613990618
◆	Service Kit SFY	9613990615	9613990615	9613990617	9613990619

1.8

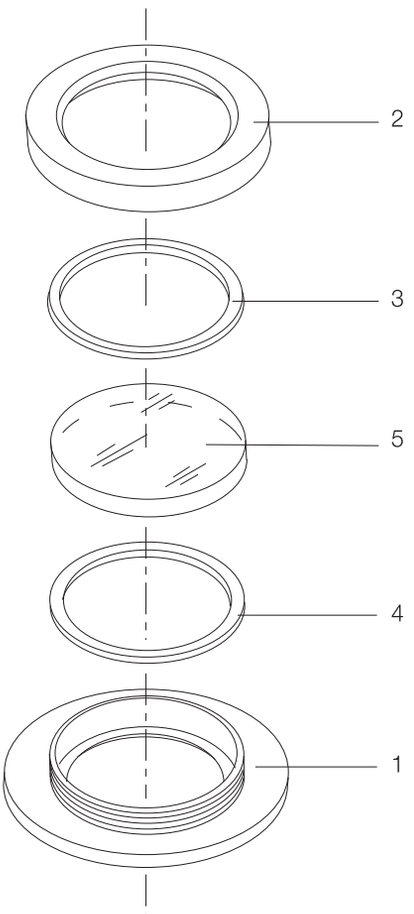

AISI 316

Pos		Qty	Denomination	9611710101 Dia. 78 mm	9611710102 Dia. 120 mm
1		1	Welding flange	9611732029	9611732010
2		1	Nut	9611712030	9611712011
3	□	1	Seal	9611990101	9611990102
4	□	1	Seal (NBR)	9611990103	9611990104
5	□	1	Glass plate	9611990501	9611990502

		Dia. 78 mm	Dia. 120 mm
Service kits			
	Service kit	**9611925002**	**9611925003**

Parts marked with □ are included in the Service kit.

Recommende spare parts: Service kit.

900-415

1.8

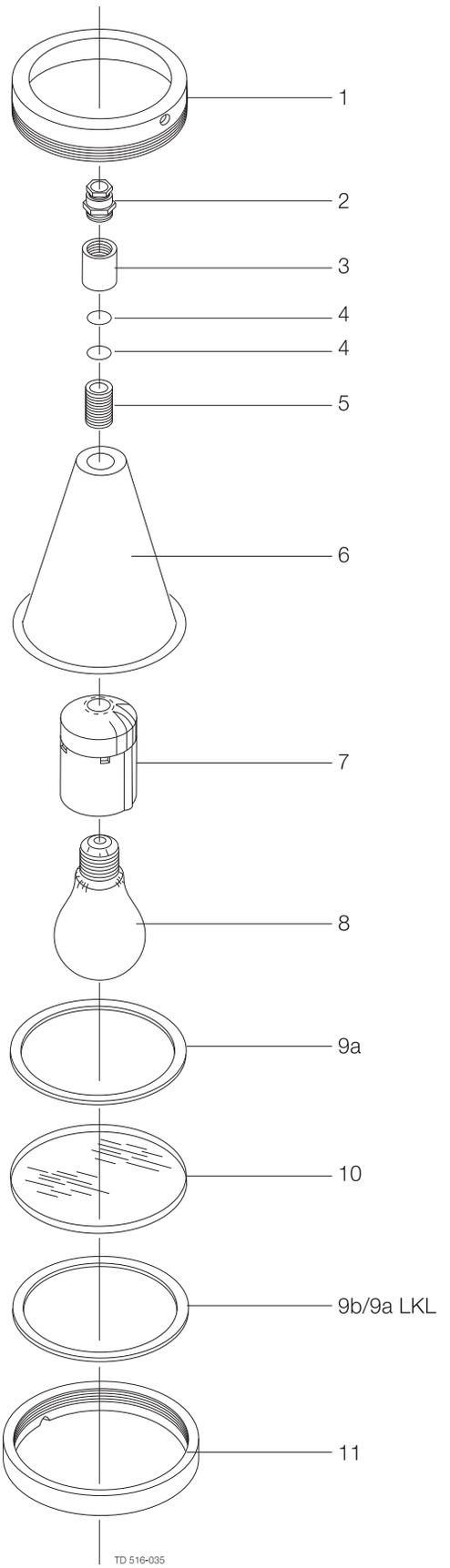

Pos	Qty	Denomination	AISI 304 3201025271 Dia. 105 mm
1	1	Lock washer	3201007701
9a ▲	1	Seal (NBR)	3201013901
9b ▲	1	Seal	3201013902
10 ▲	1	Glass plate	3201007981
11	1	Welding ring	3201007711

Parts marked with ▲ are included in the service kit.

	1	Service Kit	9611925004

1.8

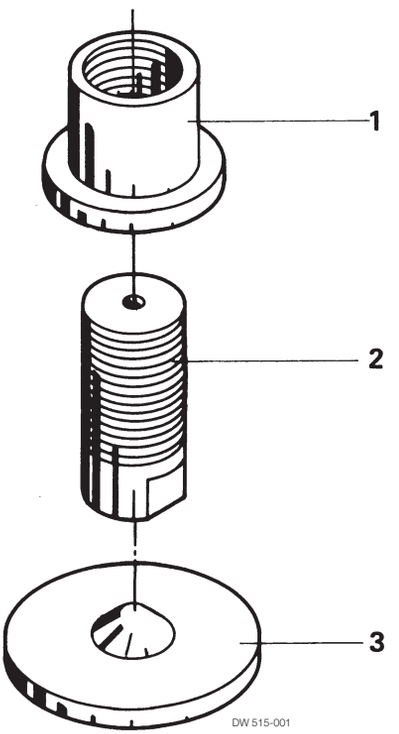

AISI 304

Pos	Qty	Denomination	961171022 19 mm	961171023 25 mm	961171025 38 mm
1	1	Nut	9611710350	9611710380	9611710410
2	1	Foot - solid	9611710360	9611710390	9611710420
3	1	Base plate	9611710370	9611710400	9611710430

900-414

1.8

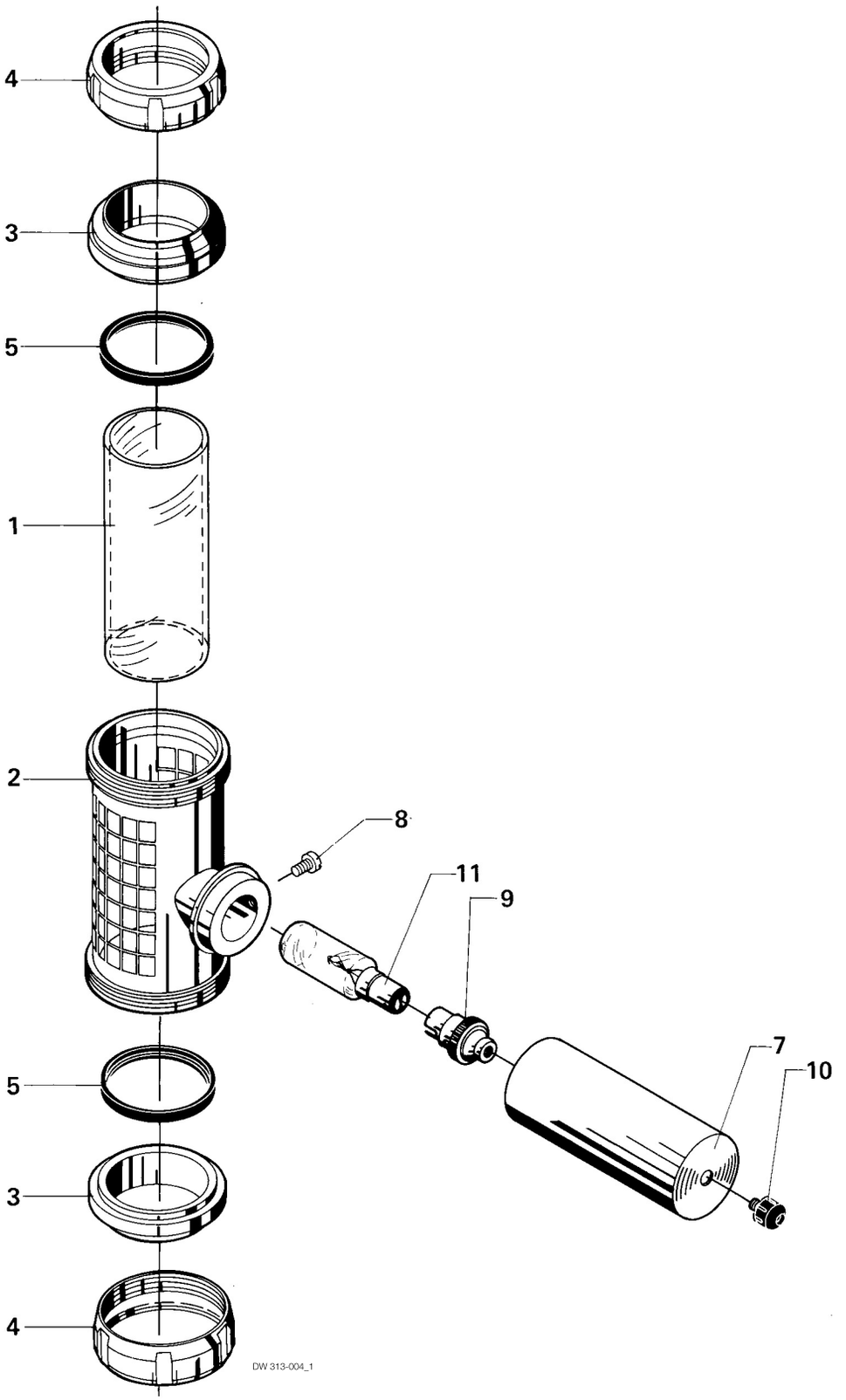

LKGL-1 Period 8807 -

LKGL-1
Period 8807 -
AISI 304

Pos		Qty	Denomination	9612141601 25 mm	9612141602 38 mm	9612141603 51 mm	9612141604 63,5 mm	9612141605 76 mm
1	□	1	Glasspipe	9611990529	9611990530	9611990531	9611990532	9611990533
2			Protecting tube					
3		2	Liner	9612140206	9612140207	9612140208	9612140209	9612140210
4		2	Nut	3131900021	3131900031	3131900041	3131900051	3131900061
5	□	2	Seal-ring, EPDM	9611991976	9611991977	9611991978	9611991979	9611991980
			Seal-ring, NBR	9611991971	9611991972	9611991973	9611991974	9611991975
7		1	Shield tube	9611302140	9611302140	9611302140	9611302140	9611302140
8		1	Screw	9611990546	9611990546	9611990546	9611990546	9611990546
9		1	Socket	9611990937	9611990937	9611990937	9611990937	9611990937
10		1	Terminal	9611990938	9611990938	9611990938	9611990938	9611990938
11	□	1	Bulb	9611990939	9611990939	9611990939	9611990939	9611990939

LKGL-1
Period 8807 -
AISI 316

Pos		Qty	Denomination	9612141606 25 mm	9612141607 38 mm	9612141608 51 mm	9612141609 63,5 mm	9612141610 76 mm
1	□	1	Glasspipe	9611990529	9611990530	9611990531	9611990532	9611990533
2			Protecting tube					
3		2	Liner	9612140206	9612140207	9612140208	9612140209	9612140210
4		2	Nut	3131900021	3131900031	3131900041	3131900051	3131900061
5	□	2	Seal-ring, EPDM	9611991976	9611991977	9611991978	9611991979	9611991980
			Seal-ring, NBR	9611991971	9611991972	9611991973	9611991974	9611991975
7		1	Shield tube	9611302140	9611302140	9611302140	9611302140	9611302140
8		1	Screw	9611990546	9611990546	9611990546	9611990546	9611990546
9		1	Socket	9611990937	9611990937	9611990937	9611990937	9611990937
10		1	Terminal	9611990938	9611990938	9611990938	9611990938	9611990938
11	□	1	Bulb	9611990939	9611990939	9611990939	9611990939	9611990939

Recommended spare parts: Pos. 1, 5, 11.

900-411

1.8

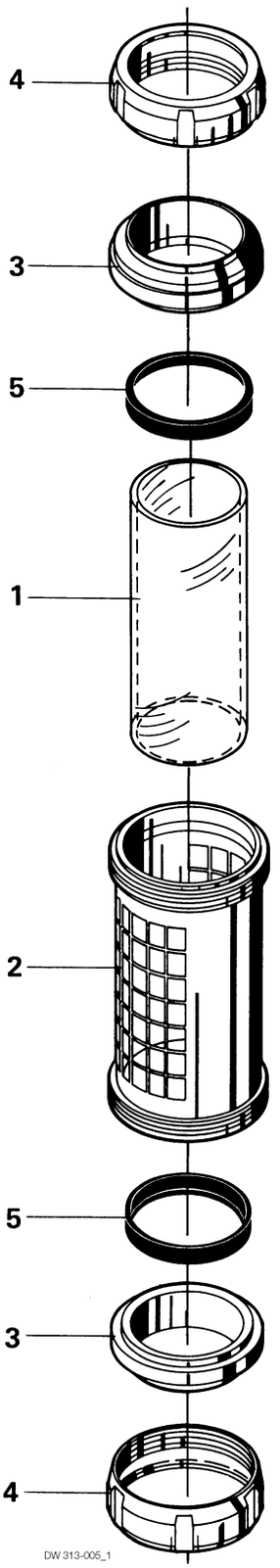

LKGG-1
Period 8807 -
AISI 304

Pos		Qty	Denomination	9612141401 25 mm	9612141402 38 mm	9612141403 51 mm	9612141404 63,5 mm	9612141405 76 mm	9612141411 101.6 mm
1	□	1	Glasspipe	9611990529	9611990530	9611990531	9611990532	9611990533	9611992666
2		1	Protecting tube						
3		2	Liner	9612140206	9612140207	9612140208	9612140209	9612140210	9612140212
4		2	Nut	3131900021	3131900031	3131900041	3131900051	3131900061	3131800148
5	□	2	Seal-ring, EPDM	9611991976	9611991977	9611991978	9611991979	9611991980	9611992665
			Seal-ring, NBR	9611991971	9611991972	9611991973	9611991974	9611991975	9611992664

LKGG-1
Period 8807 -
AISI 316

Pos		Qty	Denomination	9612141406 25 mm	9612141407 38 mm	9612141408 51 mm	9612141409 63,5 mm	9612141410 76 mm	9612141412 101.6 mm
1	□	1	Glasspipe	9611990529	9611990530	9611990531	9611990532	9611990533	9611992666
2		1	Protecting tube						
3		2	Liner	9612140206	9612140207	9612140208	9612140209	9612140210	9612140212
4		2	Nut	3131900021	3131900031	3131900041	3131900051	3131900061	3131800148
5	□	2	Seal-ring, EPDM	9611991976	9611991977	9611991978	9611991979	9611991980	9611992665
			Seal-ring, NBR	9611991971	9611991972	9611991973	9611991974	9611991975	9611992664

Recommended spare parts: pos. 1, 5.

900-412

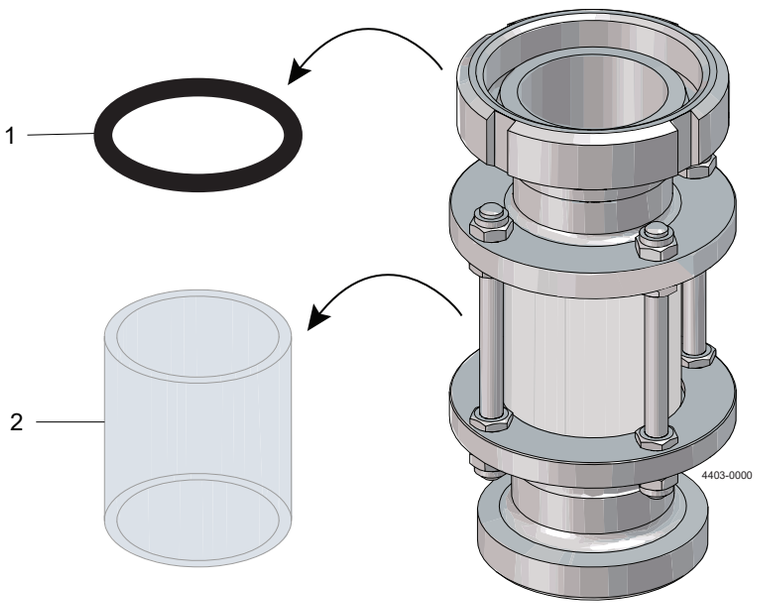
1
2
4403-0000

Pos	Qty	Denomination	Item no.
1	2	Seal ring, DN10, NBR	9611991445
	2	Seal ring, DN15, NBR	9611991446
	2	Seal ring, DN20, NBR	9611991447
	2	Seal ring, DN25, NBR	9611991448
	2	Seal ring, DN32, NBR	9611991449
	2	Seal ring, DN40, NBR	9611991450
	2	Seal ring, DN50, NBR	9611991451
	2	Seal ring, DN50, EPDM	9611995993*
	2	Seal ring, DN50, FPM	9611995994*
	2	Seal ring, DN65, NBR	9611991452
	2	Seal ring, DN80, NBR	9611991453
	2	Seal ring, DN100, NBR	9611991455
	2	Seal ring, DN125, NBR	9611991456
	2	Seal ring, DN150, NBR	9611991457
2	1	Glas tube, DN10	9611991432
	1	Glas tube, DN15	9611991433
	1	Glas tube, DN20	9611991434
	1	Glas tube, DN25	9611991435
	1	Glas tube, DN32	9611991436
	1	Glas tube, DN40	9611991437
	1	Glas tube, DN50	9611991438
	1	Glas tube, DN65	9611991439
	1	Glas tube, DN80	9611991440
	1	Glas tube, DN100	9611991442
	1	Glas tube, DN125	9611991443
	1	Glas tube, DN150	9611991444

** Seals for InLine Sight glass which is part of Hybrid Powder Mixers.*

1.8

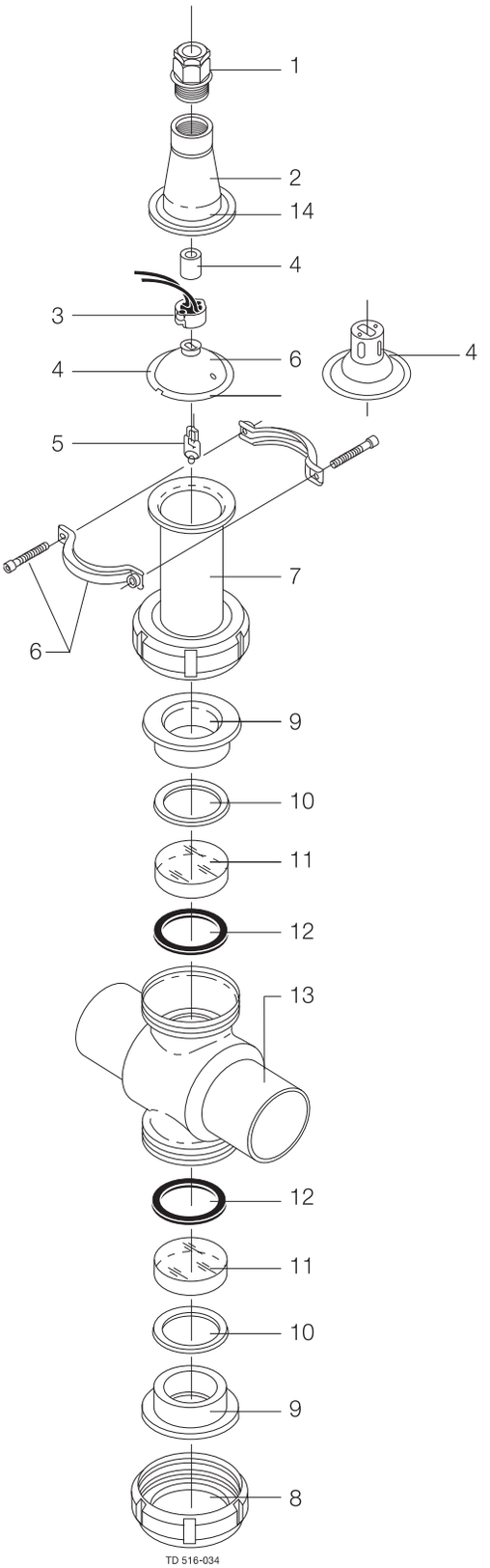
1
2
14
4
3
4
6
4
5
7
6
9
10
11
12
13
12
11
10
9
8
TD 516-034

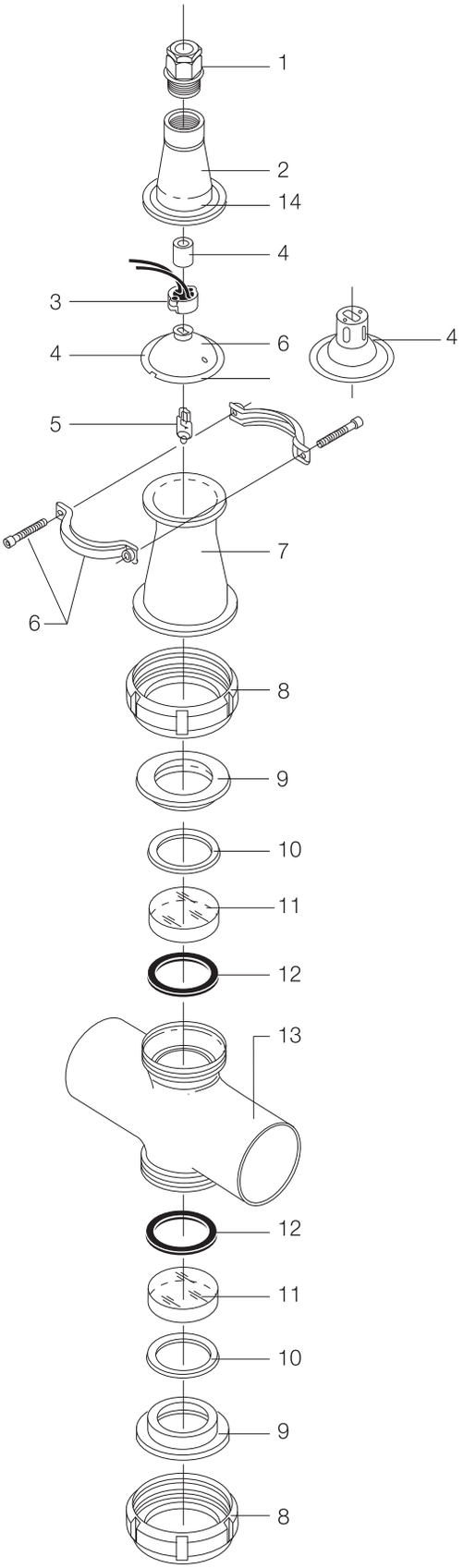
1
2
14
4
3
4
6
4
5
7
6
8
9
10
11
12
13
12
11
10
9
8

Sight Glass with Light

Pos		Qty	Denomination	9611940011 38 mm	9611940012 51 mm	9611940013 63.5 mm	9611940014 76 mm	9611940015 101.6 mm
1		1	Cable gland	9611992537	9611992537	9611992537	9611992537	9611992537
2		1	Cap	9612281001	9612281001	9612281001	9612281001	9612281001
3		1	Socket	9611992538	9611992538	9611992538	9611992538	9611992538
4		1	Reflector, (Period 9408-)	9612441901	9612441901	9612441901	9612441901	9612441901
		1	Reflector, (Period -9408)					
5		1	Halogen bulb	9611992540	9611992540	9611992540	9611992540	9611992540
6		1	Clamp ring	9611311051	9611311051	9611311051	9611311051	9611311051
7		1	Distance piece	9612280701	9612280801	9612280801	9612280901	9612280902
8		1	Nut	190613	190615	190615		
		2	Nut				190616	190618
9		2	Spacer	9611992760	9611992761	9611992762	9611992763	9611992764
10	□	2	Fiber seal	9611992738	9611992739	9611992739	9611992740	9611992741
11	□	2	Glass	9611992506	9611992507	9611992507	9611992508	9611992509
12	□	2	Seal ring, EPDM (Standard)	9611992436	9611992437	9611992437	9611992438	9611992439
		2	Seal ring, FPM	9611992440	9611992441	9611992441	9611992442	9611992443
		2	Seal ring, NBR	9611992444	9611992445	9611992445	9611992446	9611992447
13		1	Sight glass body	9612281201	9612281202	9612281101	9612281102	9612281103
14		1	Spacer	9612441801	9612441801	9612441801	9612441801	9612441801

Sight Glass without Light

Pos		Qty	Denomination	9611940001 38 mm	9611940002 51 mm	9611940003 63.5 mm	9611940004 76 mm	9611940005 101.6 mm
8		2	Nut (one on both sides)	190613	190615	190615	190616	190618
9		2	Spacer	9611992760	9611992761	9611992762	9611992763	9611992764
10	□	2	Fiber seal	9611992738	9611992739	9611992739	9611992740	9611992741
11	□	2	Glass	9611992506	9611992507	9611992507	9611992508	9611992509
12	□	2	Seal ring, EPDM (Standard)	9611992436	9611992437	9611992437	9611992438	9611992439
		2	Seal ring, FPM	9611992440	9611992441	9611992441	9611992442	9611992443
		2	Seal ring, NBR	9611992444	9611992445	9611992445	9611992446	9611992447
13		1	Sight glass body	9612281201	9612281202	9612281101	9612281102	9612281103

Recommended spare parts: pos. 10, 11, 12.

900-413

1.8

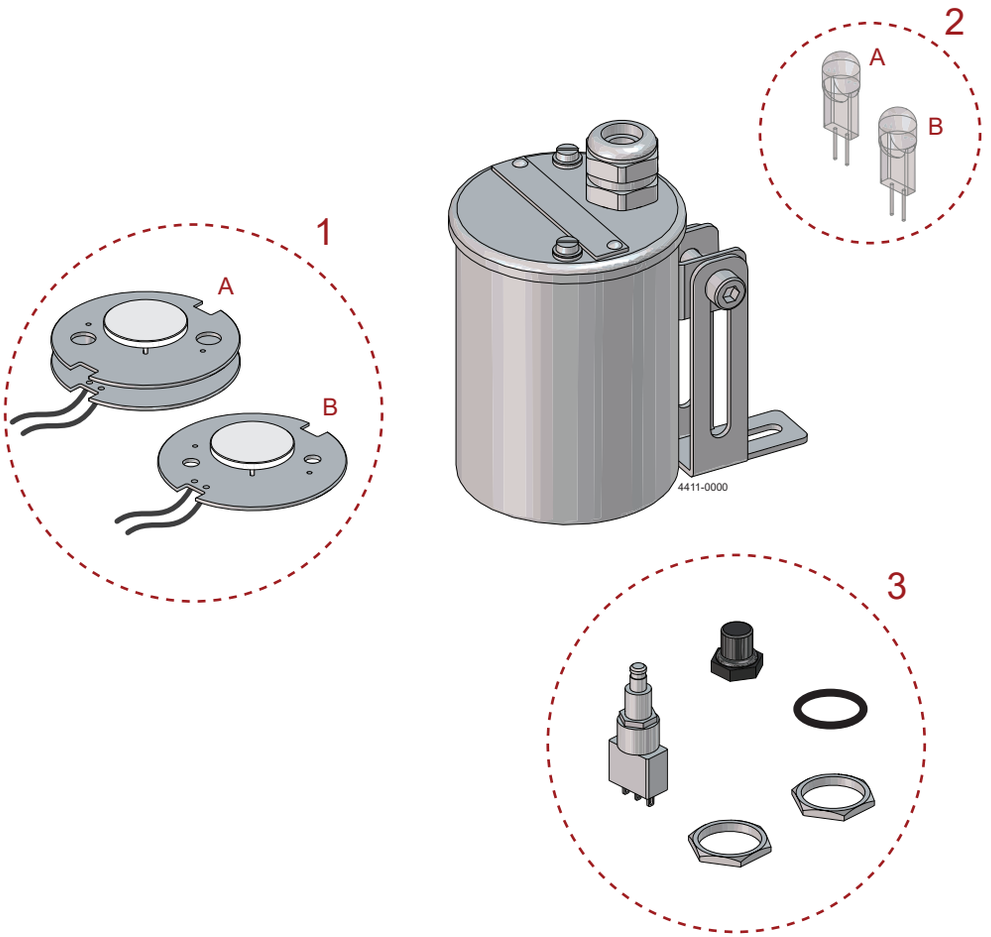

Pos	Qty	Denomination	Item no.
1A	1	LED MODULE 4W FOR MINIVISION VERSION WITHOUT PUSH BUTTON	9614465552
1B	1	LED MODULE 4W FOR MINIVISION VERSION WITH PUSH BUTTON	9614465553
2A	1	HALOGENE BULB 20W	9614465550
2B	1	HALOGENE BULB 50W	9614465551
3	1	PUSH-BUTTON/CAP FOR MINIVISION WITHOUT PUSH BUTTON	9614465554

Not manufactured anymore

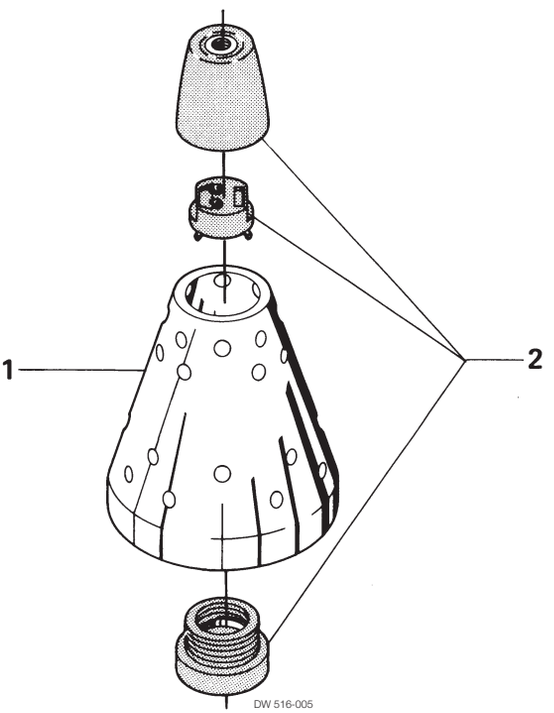

AISI 304

Pos	Qty	Denomination	Dia. 78 mm	Dia. 120 mm
1	1	Cover		
2	1	Socket (China)		

900-416

Not manufactured anymore

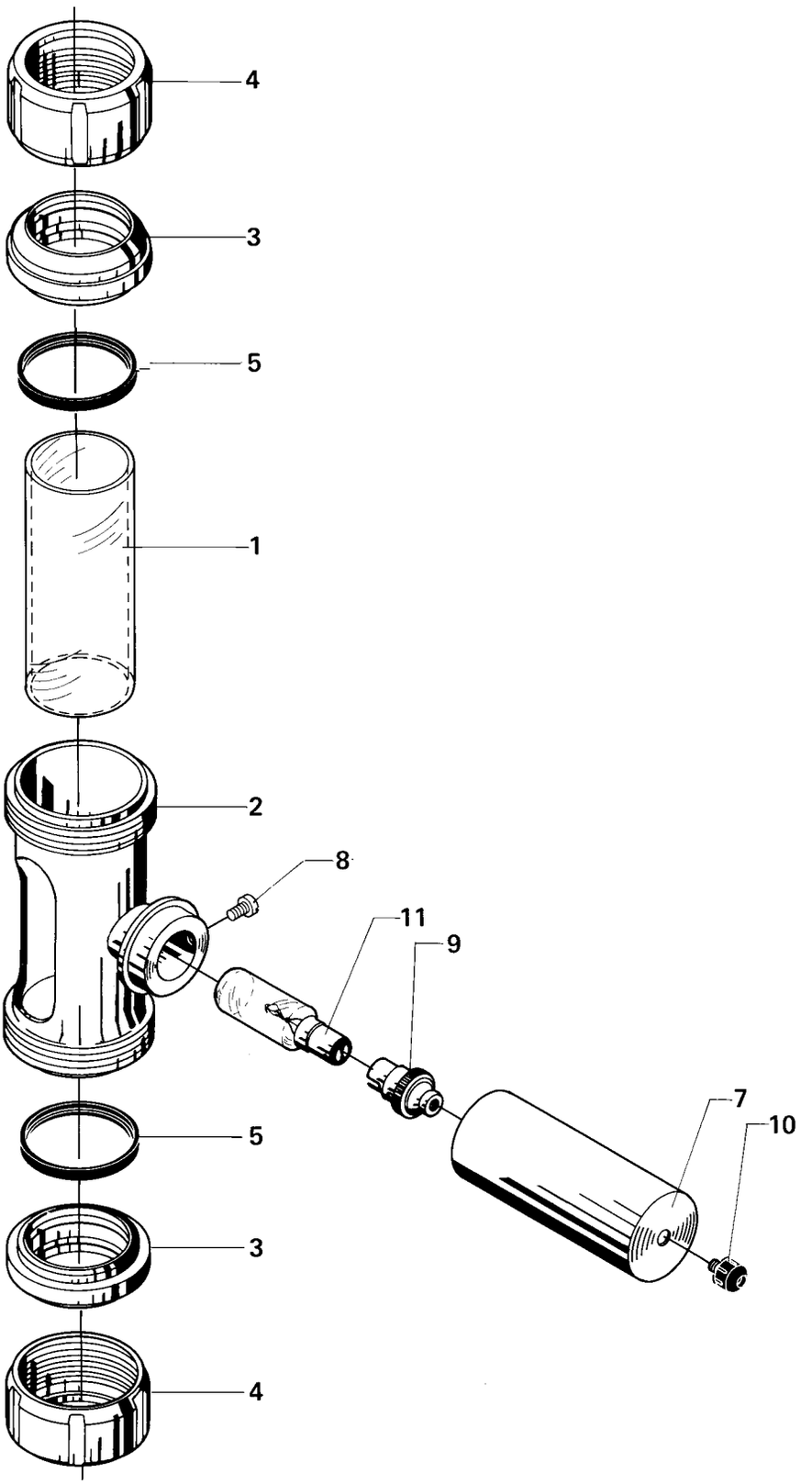

LKGL
Period 7301-8806
AISI 304

Pos	Qty	Denomination	9611300855 25 mm	9611300856 38 mm	9611300857 51 mm	9611300858 63.5 mm	9611300859 76 mm
1	1	Glass pipe	9611990529	9611990530	9611990531	9611990532	9611990533
2		Protecting tube					
3	2	Liner					
4	2	Nut	3131900021	3131900031	3131900041	3131900051	3131900061
5	2	Seal-ring	3131900311	3131900321	9611990955	9611990956	3131900351
7	1	Shield tube					
8	1	Screw	9611990546	9611990546	9611990546	9611990546	9611990546
9	1	Socket	9611990937	9611990937	9611990937	9611990937	9611990937
10	1	Terminal	9611990938	9611990938	9611990938	9611990938	9611990938
11	1	Bulb	9611990939	9611990939	9611990939	9611990939	9611990939

Recommended spare parts: pos. 1, 5, 11.

Not manufactured anymore

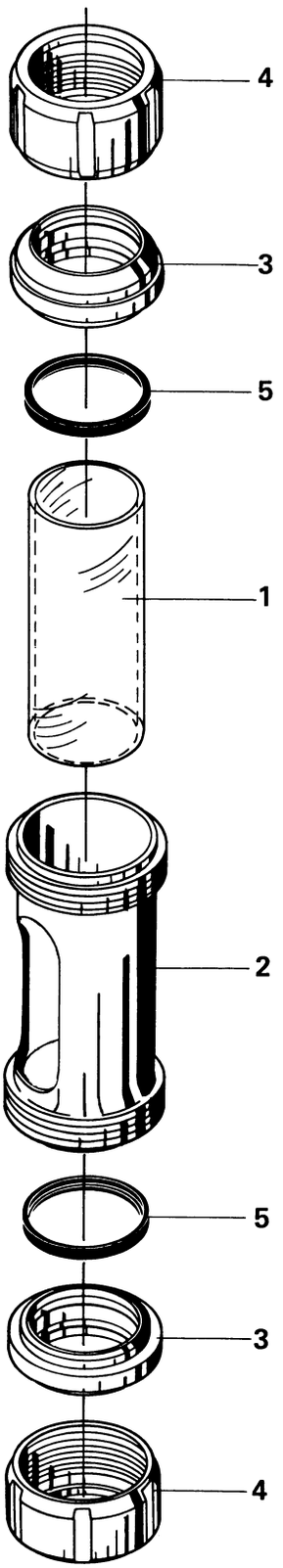

LKGG
Period 7301 - 8806
AISI 304

Pos	Qty	Denomination	9611300848 25 mm	9611300849 38 mm	9611300850 51 mm	9611300851 63.5 mm	9611300852 76 mm
1	1	Glasspipe	9611990529	9611990530	9611990531	9611990532	9611990533
2	1	Protecting tube					
3	2	Liner					
4	2	Nut	3131900021	3131900031	3131900041	3131900051	3131900061
5	2	Seal-ring	3131900311	3131900321	9611990955	9611990956	3131900351

Recommended spare parts: pos. 1, 5.

1.9 Tank covers

Alfa Laval can provide access tank covers for all application needs. Both pressure and non-pressure covers are available and can be positioned on the top or side of the tank or even as hand doors for washing machines etc.



Spare parts - circular tank covers

LKDS-454 . . . . . 1.9.600
LKDC 202-620 . . . . . 1.9.602
LKDC-LP 1.9.604
LKDC-LPB 1.9.606
HLSD-2 . . . . . 1.9.608
Type C-202 . . . . . 1.9.610
Type C-202A 1.9.612
Type C-202B 1.9.614
Type C-306 . . . . . 1.9.616
Type C-404 . . . . . 1.9.618
Type C-404AH4 . . . . . 1.9.620
Type C-404ASB 1.9.622
Type C-404BSB 1.9.624
Type C-404CC 1.9.626
Type C-404H6 . . . . . 1.9.628
Type C-404SB 1.9.630
Type C-418 . . . . . 1.9.632
Type C-454 . . . . . 1.9.634
Type C-454A 1.9.636
Type C-454SB 1.9.638
Type C-518 (Previously C-520) 1.9.640
Type C-518A (Previously C-520A) 1.9.642
Type C-518MH 1.9.644
Type C-518SBAR (Previously C-520SB) 1.9.646
Type C-620A 1.9.648
Type C-620SB 1.9.650
Type CG-404 . . . . . 1.9.652

1.9 Tank covers

Alfa Laval can provide access tank covers for all application needs. Both pressure and non-pressure covers are available and can be positioned on the top or side of the tank or even as hand doors for washing machines etc.

Type CG-454 . . . . . 1.9.654
Type CG-518 . . . . . 1.9.656

Spare parts - oval tank covers
LKD 440 x 320 . . . . . 1.9.658
LKD 532 x 432 (Previously 535 x 435) 1.9.660
LKD 542 x 446 (Previously 546 x 447) 1.9.662
Type O-440x320IO (Previously O-320x440IO) 1.9.664
Type O-440x320IOIH (Previously O-440x320IO) 1.9.666
Type O-490x395OI (Previously O-395x495IO) 1.9.668
Type O-510x370IO (Previously O-370x510IO) 1.9.670
Type O-542x446IO (Previously O-445x550IO) 1.9.672
Type O-544x440IO (Previously O-440x540IO) 1.9.674
Type O-658x532IO (Previously O-531x655IO) 1.9.676

Spare parts - rectangular tank covers
Type R-235x185 (Previously R-184x234) 1.9.678
Type R-332x440 (Previously R-440x332) 1.9.680
Type R-432x555 (Previously R-555x432) 1.9.682
Type R-440x332 (Previously R-332x440) 1.9.684
Type R-555x432 (Previously R-432x555) 1.9.686

Spare parts for obsolete products
LKD Oval Manhole Cover 440 x 320 . . . . . 1.9.688
LKD Oval Manhole Cover 440 x 320 . . . . . 1.9.690
LKD Oval Manhole Cover 450 x 350 . . . . . 1.9.692
LKD Oval Manhole Cover 450 x 350 . . . . . 1.9.694
LKD-LKDI Oval Manhole Cover 510 x 410 . . . . . 1.9.696
LKDP Oval Manhole Cover 450 x 350 . . . . . 1.9.698
LKD-FH Oval Manhole Cover 1.9.700
LKD-F Oval Manhole Cover 1.9.702
LKD-VH Oval Manhole Cover 450 x 350 . . . . . 1.9.704
LKDC Manhole Cover 1.9.706
LKDS Round Dust Manhole Cover 1.9.708
LKTD & LKTDI Oval Manhole Cover 510 x 410 . . . . . 1.9.710
HLSD Manhole Cover 1.9.712

1.9

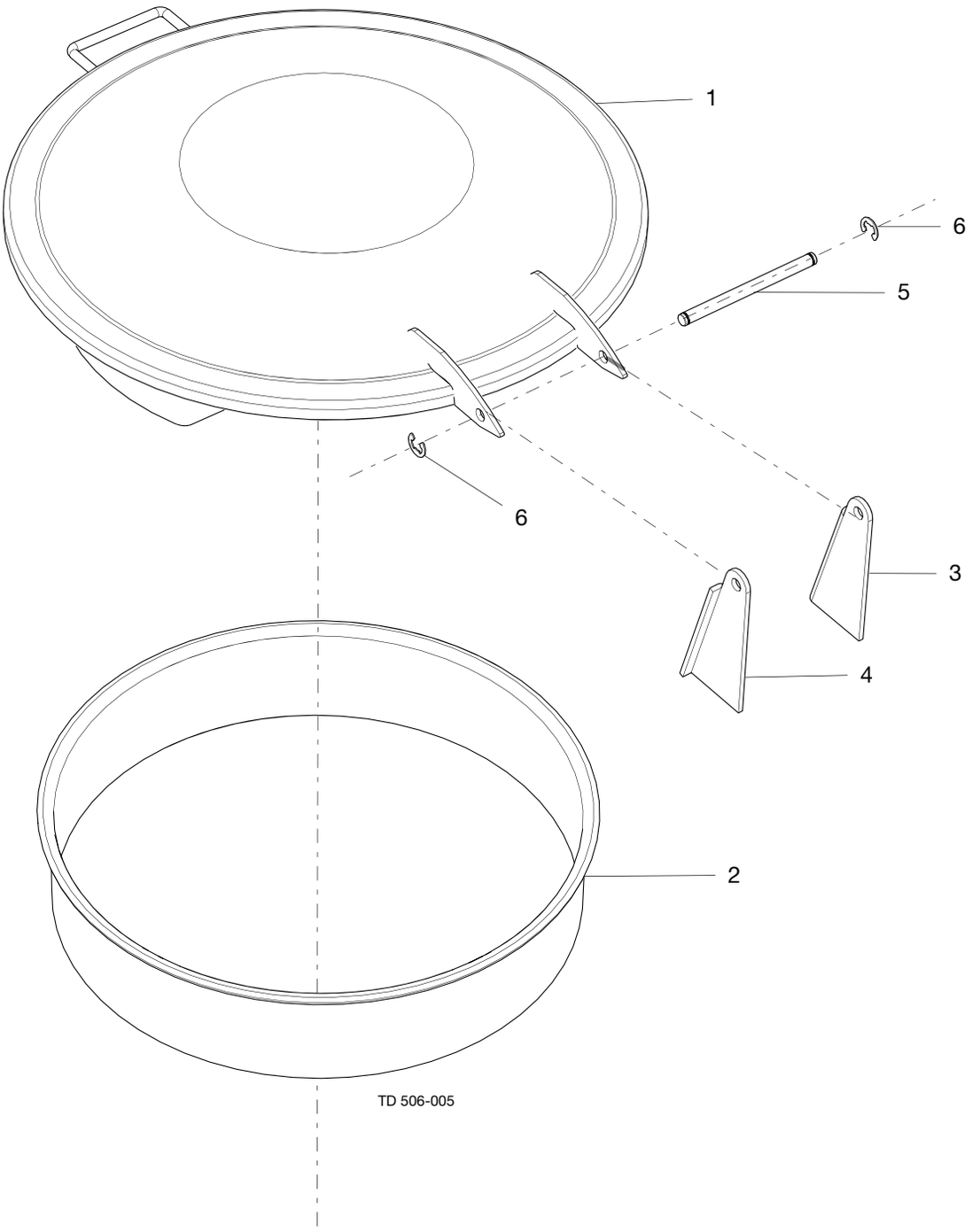

Pos	Qty	Denomination	1.4301	1.4404
1	1	Cover		
2	1	Frame , 24 mm		
	1	Frame , 100 mm		
3	1	Left hinge ear , for 24 mm Frame	9613437777	9613437777
	1	Left hinge ear , for 100 mm Frame	9613437779	9613437779
4	1	Right hinge ear , for 24 mm Frame	9613437778	9613437778
	1	Right hinge ear , for 100 mm Frame	9613437780	9613437780
5	1	Pin for hinge	9613437781	9613437781
6	2	Retaining ring	9613437782	9613437782

1.9

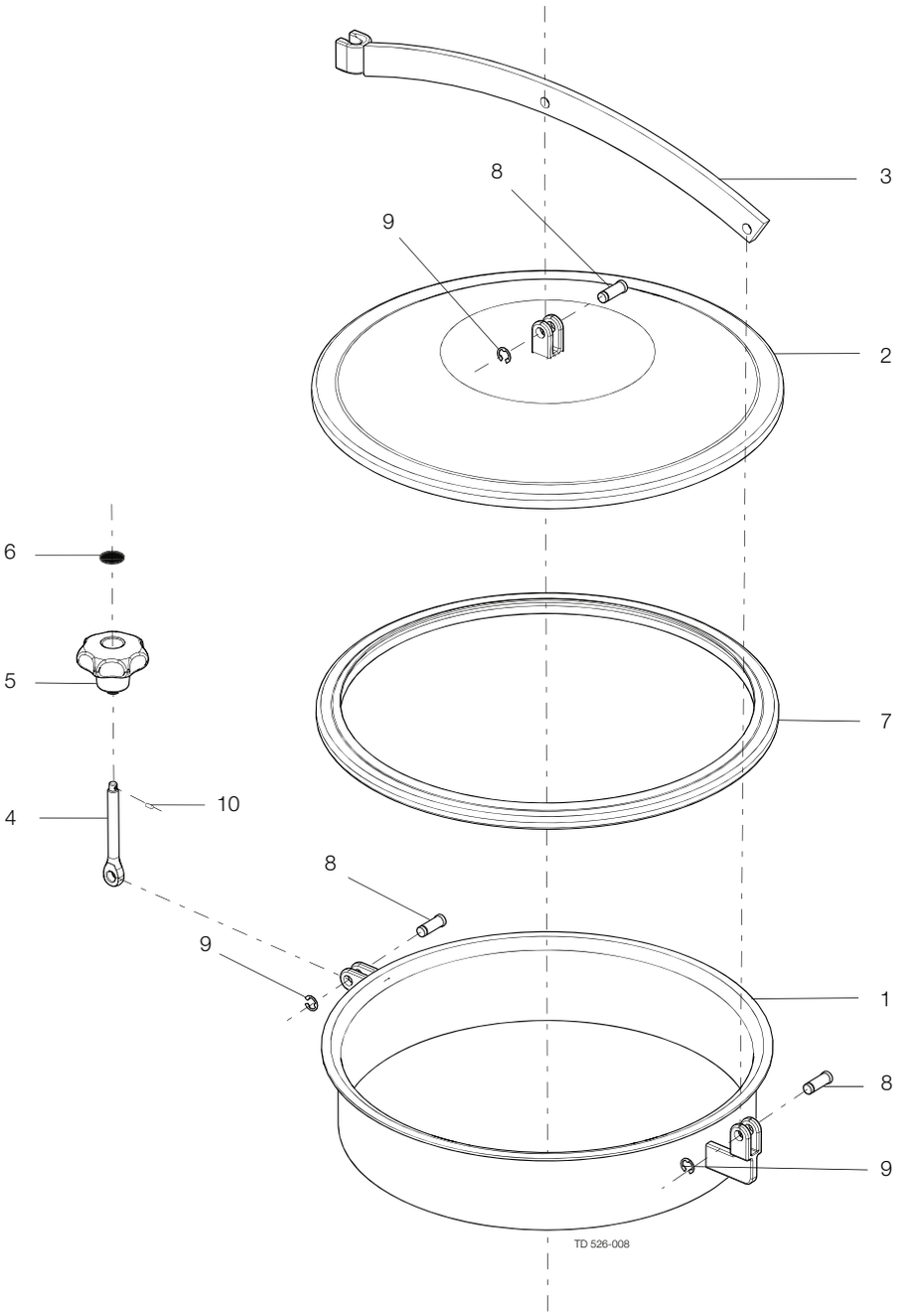

Pos	Qty	Denomination	DN 202	DN306	DN 404 (400)
1	1	Frame, 85 mm 1.4301			
	1	Frame, 85 mm 1.4301 3A			
	1	Frame, 85 mm 1.4404			
	1	Frame, 85 mm 1.4404 3A			
	1	Frame, 100 mm 1.4301			
	1	Frame, 100 mm 1.4301 3A			
	1	Frame, 100 mm 1.4404			
	1	Frame, 100 mm 1.4404 3A			
2	1	Cover, 1.4301			
	1	Cover, 1.4301 3A			
	1	Cover, 1.4404			
	1	Cover, 1.4404 3A			
3	1	Toggle	9613437709	9613437719	9613437725
4	1	Swing bolt	9611700590	9611700590	9611700590
5	1	Handle	9611700632	9611700632	9611700632
	1	Handle, Stainless Steel	9613437785	9613437785	9613437785
6	1	Capsule, blue	9611700644	9611700644	9611700644
7	1	Seal, EPDM	9613437705	9613437715	9613437726
	1	Seal, NBR	9613437706	9613437716	9613437727
	1	Seal, FPM	9613437707	9613437717	9613437728
	1	Seal, Q (silicon)	9613437708	9613437718	9613437729
8	3	Pin	9613437761	9613437761	9613437761
9	6	Retaining ring	9613437762	9613437762	9613437762
10	1	Connex-pin	9611990561	9611990561	9611990561

Recommended spare parts: Pos. 7.

Pos	Qty	Denomination	DN 454	DN 518 (516)	DN 620
1	1	Frame, 100 mm 1.4301			
	1	Frame, 100 mm 1.4301 3A			
	1	Frame, 100 mm 1.4404		9613437742	
	1	Frame, 100 mm 1.4404 3A			
	1	Frame, 200 mm 1.4301			
	1	Frame, 200 mm 1.4301 3A			
	1	Frame, 200 mm 1.4404			
	1	Frame, 200 mm 1.4404 3A			
2	1	Cover, (1.4301)			
	1	Cover, (1.4301) 3A			
	1	Cover, (1.4404)			
	1	Cover, (1.4404) 3A			
3	1	Toggle	9613437735	9613437745	9613437755
4	1	Swing bolt	9611700590	9611700590	9611700590
5	1	Handle	9611700632	9611700632	9611700632
	1	Handle, Stainless Steel	9613437785	9613437785	9613437785
6	1	Capsule	9611700644	9611700644	9611700644
7	1	Seal, EPDM	9613437736	9613437746	9613437756
	1	Seal, NBR	9613437737	9613437747	9613437757
	1	Seal, FPM	9613437738	9613437748	9613437758
	1	Seal, Q (silicon)	9613437739	9613437749	9613437759
8	3	Pin	9613437761	9613437761	9613437761
9	6	Retaining ring	9613437762	9613437762	9613437762
10	1	Connex-pin	9611990561	9611990561	9611990561

Recommended spare parts: Pos. 7.

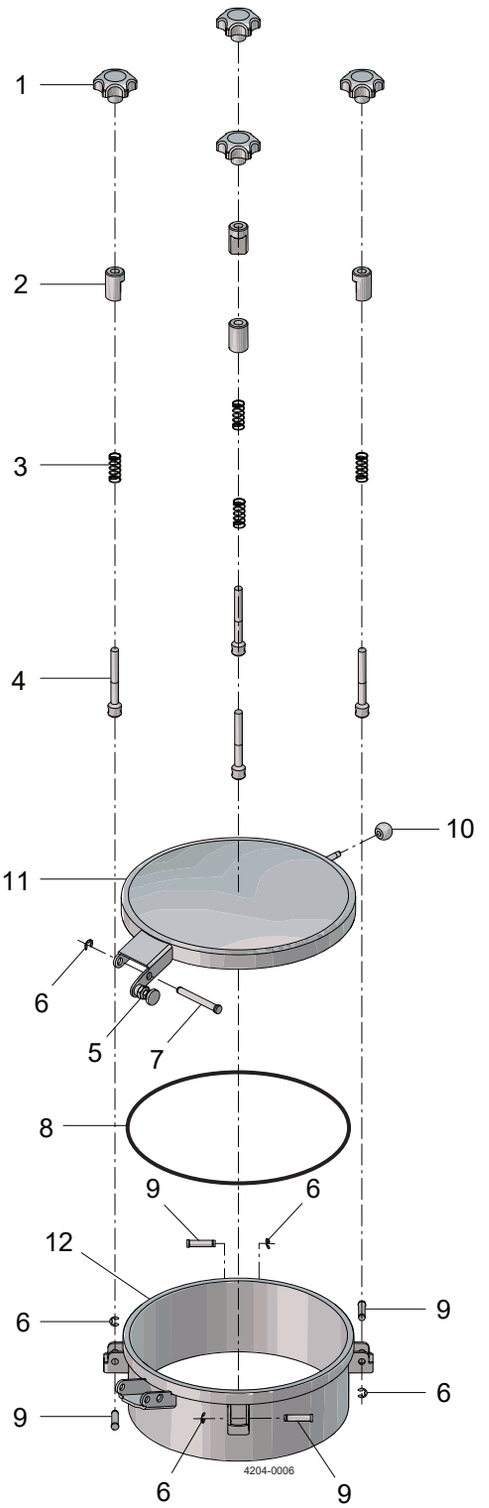
1
2
3
4
10
11
6
5
7
8
9
6
12
6
9
6
9
6
9
4204-0006

Pos	Qty	Denomination	300	400	450	500	600
1	3	Handle	9614450903				
	4	Handle		9614450903	9614450903		
	6	Handle			9614450903	9614450903	9614450903
2	3	Bushing	9614450901				
	4	Bushing		9614450901	9614450901		
	6	Bushing				9614450901	9614450901
3	3	Spring	9614450902				
	4	Spring		9614450902	9614450902		
	6	Spring				9614450902	9614450902
4	3	Spindle	9614210004				
	4	Spindle		9614210004	9614210004		
	6	Spindle				9614210004	9614210004
5	1	Safety Pin	9614450905	9614450905	9614450905	9614450905	9614450905
6	4	Retaining ring	9613437762				
	5	Retaining ring		9613437762	9613437762		
	7	Retaining ring				9613437762	9613437762
7	1	Screw	9614450906	9614450906	9614450906	9614450906	9614450906
8	1	Seal EPDM	9614450910	9614450914	9614450918	9614450922	9614450926
	1	Seal NBR	9614450911	9614450915	9614450919	9614450923	9614450927
	1	Seal FPM	9614450912	9614450916	9614450920	9614450924	9614450928
	1	Seal Q (Silicone)	9614450913	9614450917	9614450921	9614450925	9614450929
	1	Seal EPDM LKDC-LP 400		9614446209[1)]			
	1	Seal NBR LKDC-LP 400		9614446210[1)]			
	1	Seal FPM LKDC-LP 400		9614446211[1)]			
	1	Seal Q LKDC-LP 400		9614446212[1)]			
9	3	Pin	9614210206				
	4	Pin		9614210206	9614210206		
	6	Pin				9614210206	9614210206
10	1	Knob	9614450904	9614450904	9614450904	9614450904	9614450904
11	1	Cover 1.4301 (304)					
	1	Cover 1.4404 (316L)					
12	1	Frame 1.4301 (304)					
	1	Frame 1.4404 (316L)					

Recommended spare parts: Pos. 8.

[1)] For Covers ordered after 6th August 2018

TD 4204-0006

1.9

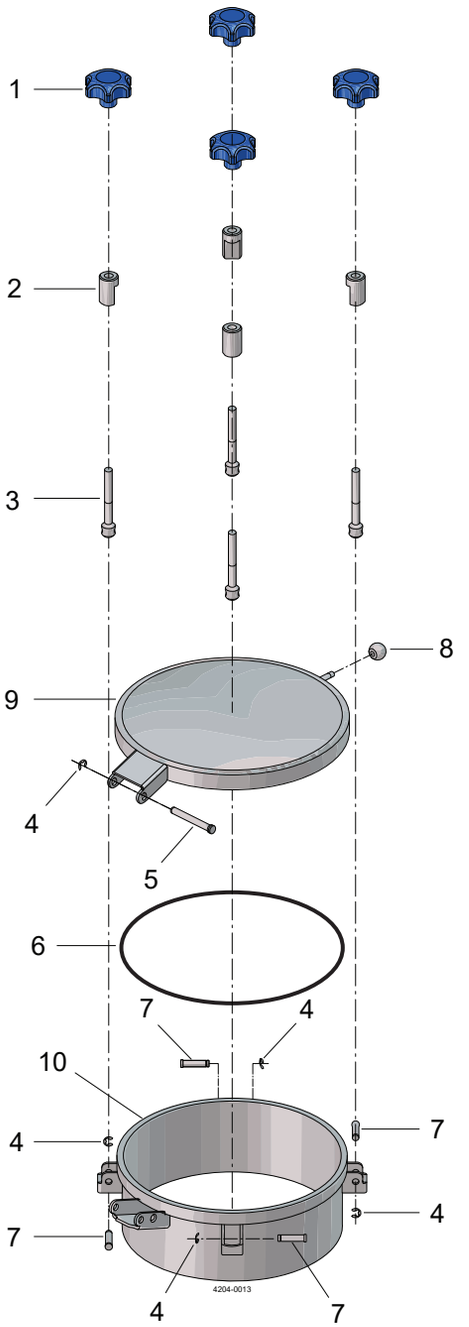

Pos	Qty	Denomination	300	400	450	500	600
1	3	Handle	9612990795				
	4	Handle		9612990795	9612990795		
	6	Handle			9612990795	9612990795	9612990795
2	3	Bushing	9614450901				
	4	Bushing		9614450901	9614450901		
	6	Bushing				9614450901	9614450901
3	3	Spindle	9614210004				
	4	Spindle		9614210004	9614210004		
	6	Spindle				9614210004	9614210004
4	4	Retaining ring	9613437762				
	5	Retaining ring		9613437762	9613437762		
	7	Retaining ring				9613437762	9613437762
5	1	Screw	9614450906	9614450906	9614450906	9614450906	9614450906
6	1	Seal EPDM	9614450910	9614450914	9614450918	9614450922	9614450926
	1	Seal NBR	9614450911	9614450915	9614450919	9614450923	9614450927
	1	Seal FPM	9614450912	9614450916	9614450920	9614450924	9614450928
	1	Seal Q (Silicone)	9614450913	9614450917	9614450921	9614450925	9614450929
	1	Seal EPDM LKDC-LP 400		9614446209[1)]			
	1	Seal NBR LKDC-LP 400		9614446210[1)]			
	1	Seal FPM LKDC-LP 400		9614446211[1)]			
	1	Seal Q LKDC-LP 400		9614446212[1)]			
7	3	Pin	9614210206				
	4	Pin		9614210206	9614210206		
	6	Pin				9614210206	9614210206
8	1	Knob	9614450904	9614450904	9614450904	9614450904	9614450904
9	1	Cover 1.4301 (304)					
	1	Cover 1.4404 (316L)					
10	1	Frame 1.4301 (304)					
	1	Frame 1.4404 (316L)					

Recommended spare parts: Pos. 6.

[1)] For Covers ordered after 6th August 2018

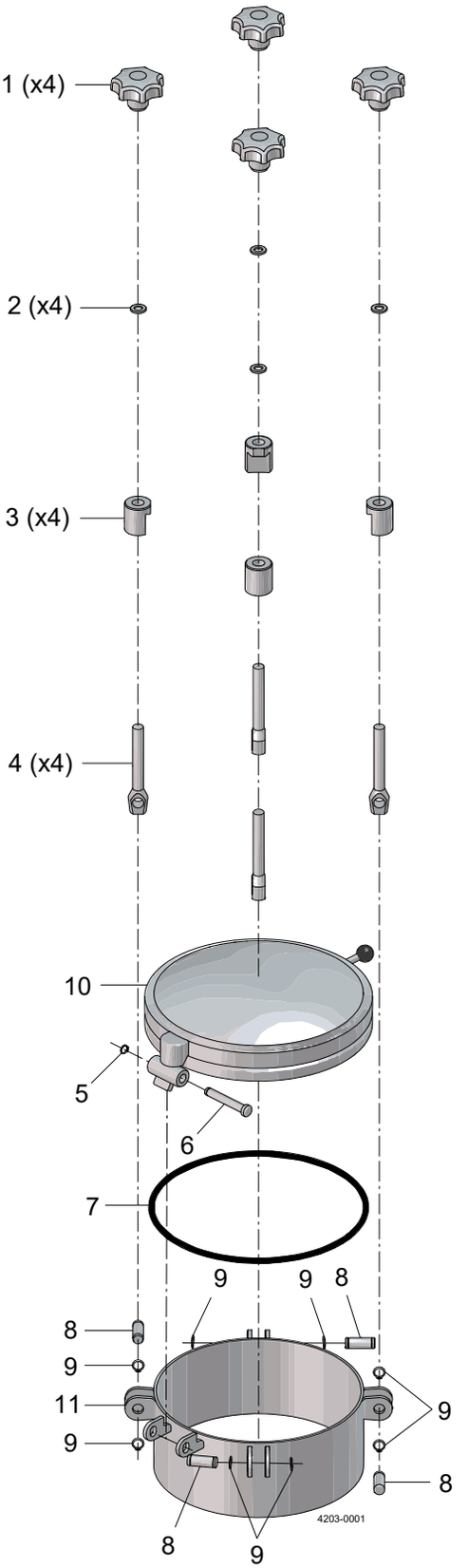
1 (x4)
2 (x4)
3 (x4)
4 (x4)
10
5
6
7
9
9
8
8
9
11
9
9
8
8
9
4203-0001

Pos	Qty	Denomination	Item no.
1	4*	Blue plastic handle with blue cap (Standard)	9613475138
	4*	Stainless Steel handle M16 1.4301	9614458418
2	4*	Washer ø17 mm	
3	4*	Sleeve	
4	4*	Eyebolt M16x125 mm	
5	1	Security ring ø12 mm	
6	1	Hinge bolt ø12 mm	
8	4*	Bolt for Eyebolt ø16 mm	
9	6	Security ring ø16 mm	
10	1**	N/A	
11	1	Lugs for Eyebolts (1 pair)	

*Qty dependant on number of handles on the Cover - this example with 4 handles.

** Lid and frame to be purchased together and by request.

Note: Contact Customer Support for purchase of above parts.

Pos	Qty	Denomination	Item no. DN200	Item no. DN300	Item no. DN400
7	1	Seal, - silicone	9613475101	9613475102	9613475103
	1	Seal, - EPDM	9613475107	9613475108	9613475109
	1	Seal, - FPM	9613475113	9613475114	9613475115
	1	Seal, FEP-Silicone	9613475119	9613475120	9613475121
	1	Seal, FEP-FPM	9613475125	9613475126	9613475127
	1	Seal, - PFA-Silicone	9613475131	9613475132	9613475133

Pos	Qty	Denomination	Item no. DN450	Item no. DN500	Item no. DN600
7	1	Seal, - silicone	9613475104	9613475105	9613475106
	1	Seal, - EPDM	9613475110	9613475111	9613475112
	1	Seal, - FPM	9613475116	9613475117	9613475118
	1	Seal, FEP-Silicone	9613475122	9613475123	9613475124
	1	Seal, FEP-FPM	9613475128	9613475129	9613475130
	1	Seal, - PFA-Silicone	9613475134	9613475135	9613475136

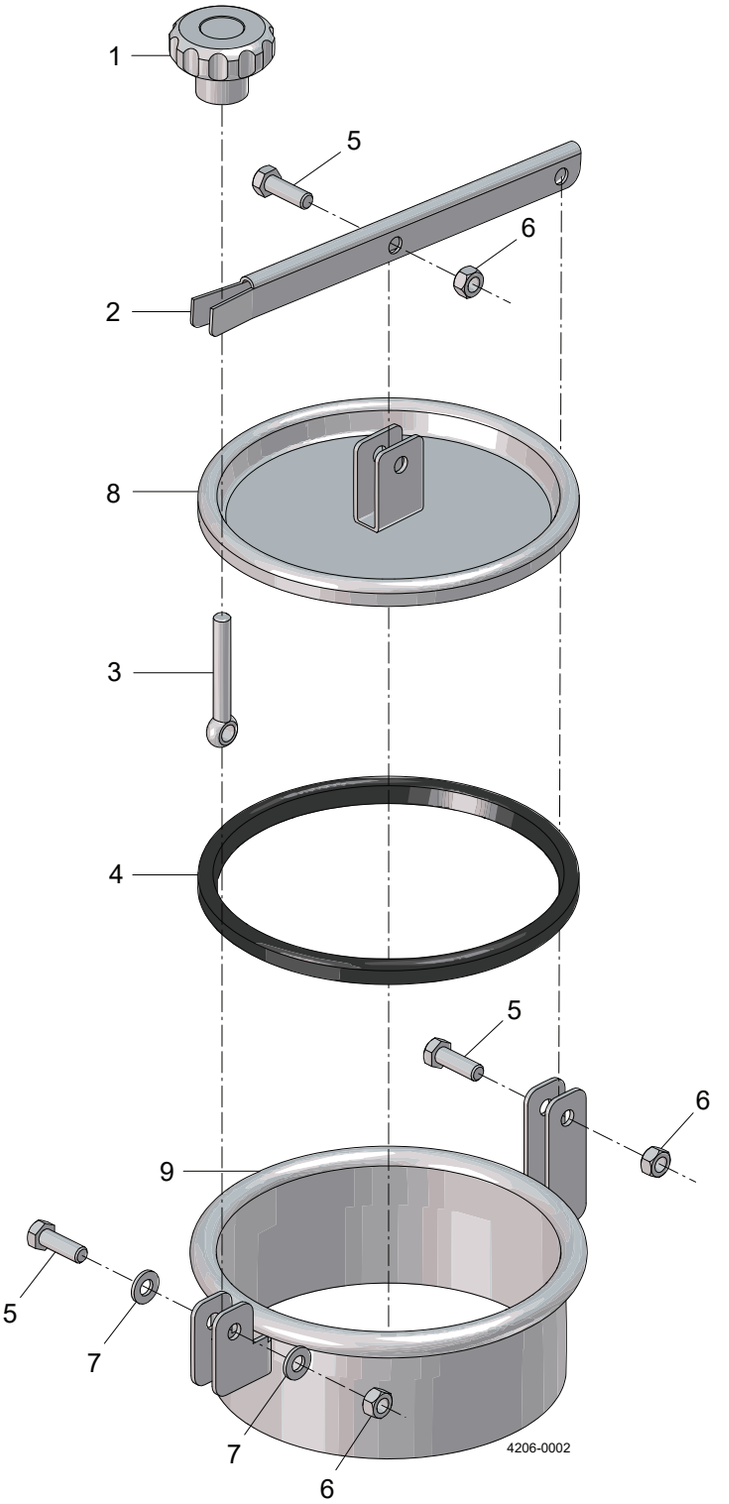
1
5
6
2
8
3
4
5
6
9
5
7
7
6
4206-0002

Pos	Qty	Denomination	1.4301 (304)	1.4404 (316L)
Circular Manhole Cover C-202				
1	1	Handle	9612990793	9612990793
	1	Handle Stainless	9613407201	9613407201
2	1	Toggle	9614209314	9614209314
3	1	Swing Bolt	9614210001	9614210001
4	1	Seal - EPDM	9612945034	9612945034
	1	Seal - NBR	9612945036	9612945036
	1	Seal - FPM	9612990736	9612990736
	1	Seal - Silicone (Q)	9612990735	9612990735
5	3	Screw	9614200102	9614200102
6	3	Nut	9614210506	9614210506
7	2	Washer	9614210802	9614210802
8	1	Frame, 85mm		
	1	Frame, 150mm		
9	1	Cover		

Recommended spare parts: Pos. 4.

TD 4206-0002

1.9

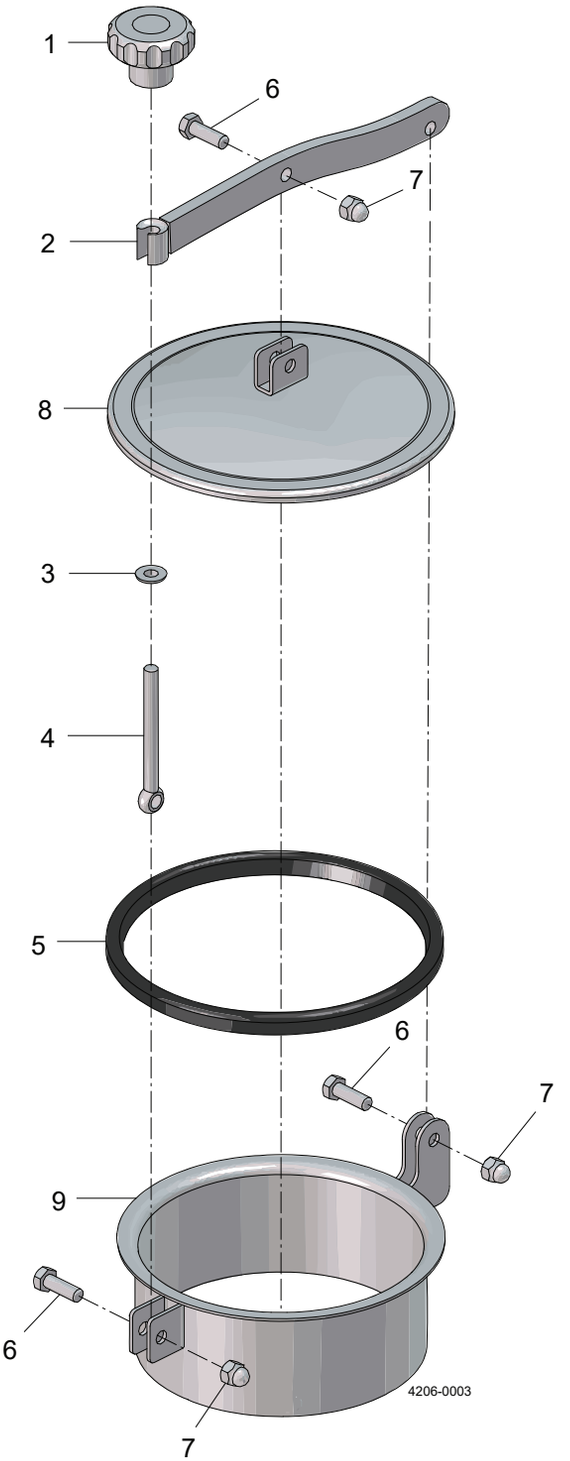

Pos	Qty	Denomination	1.4301 (304)	1.4404 (316L)
Circular Manhole Cover C-202A				
1	1	Handle	9612990793	9612990793
	1	Handle Stainless	9613407201	9613407201
2	1	Toggle	9614209315	9614209315
3	1	Washer	9614210807	9614210807
4	1	Swing bolt	9614200101	9614200101
5	1	Seal EPDM	9613437705	9613437705
	1	Seal NBR	9613437706	9613437706
	1	Seal FPM	9613437707	9613437707
	1	Seal SILICONE (Q)	9613437708	9613437708
6	3	Screw	9614210405	9614210405
7	3	Nut	9614210506	9614210506
8	1	Cover		
9	1	Frame		

Recommended spare parts: Pos. 5.

TD 4206-0003

1.9

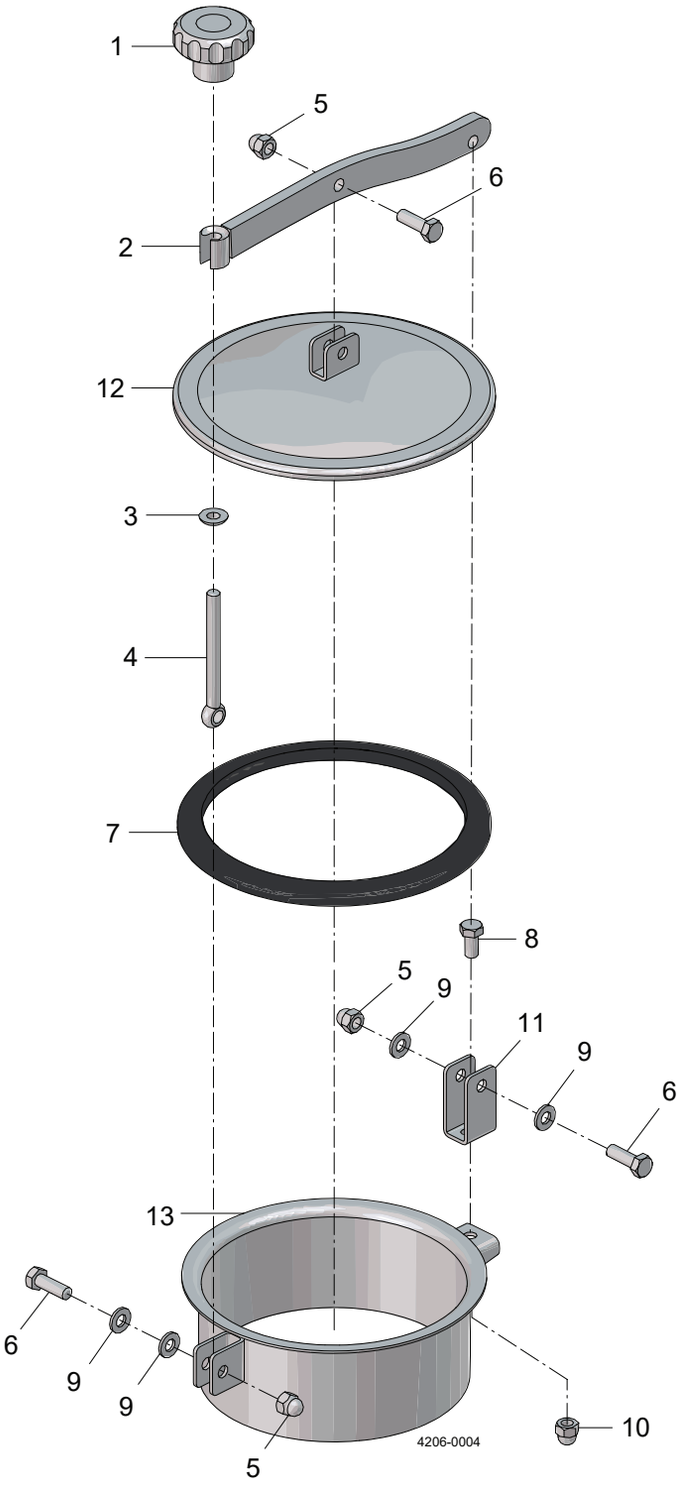

Pos	Qty	Denomination	1.4301 (304)	1.4404 (316L)
Circular Manhole Cover C-202B				
1	1	Handle	9612990793	9612990793
	1	Handle Stainless	9614210315	9614210315
2	1	Toggle	9614209315	9614209315
3	1	Washer	9614210807	9614210807
4	1	Swing bolt	9614200101	9614200101
5	3	Nut	9614210506	9614210506
6	3	Screw	9614210405	9614210405
7	1	Seal EPDM	9613437705	9613437705
	1	Seal NBR	9613437706	9613437706
	1	Seal FPM	9613437707	9613437707
	1	Seal SILICONE (Q)	9613437708	9613437708
8	1	Screw	9614210414	9614210414
9	4	Washer	9614210802	9614210802
10	1	Nut	9614210507	9614210507
11	1	U-Bracket	9614209604	9614209604
12	1	Cover	9614213201	9614213202
13	1	Frame, F=85mm		
	1	Frame, F=150mm		
	1	Frame, F=200mm		

Recommended spare parts: Pos. 7.

TD 4206-0004

1.9

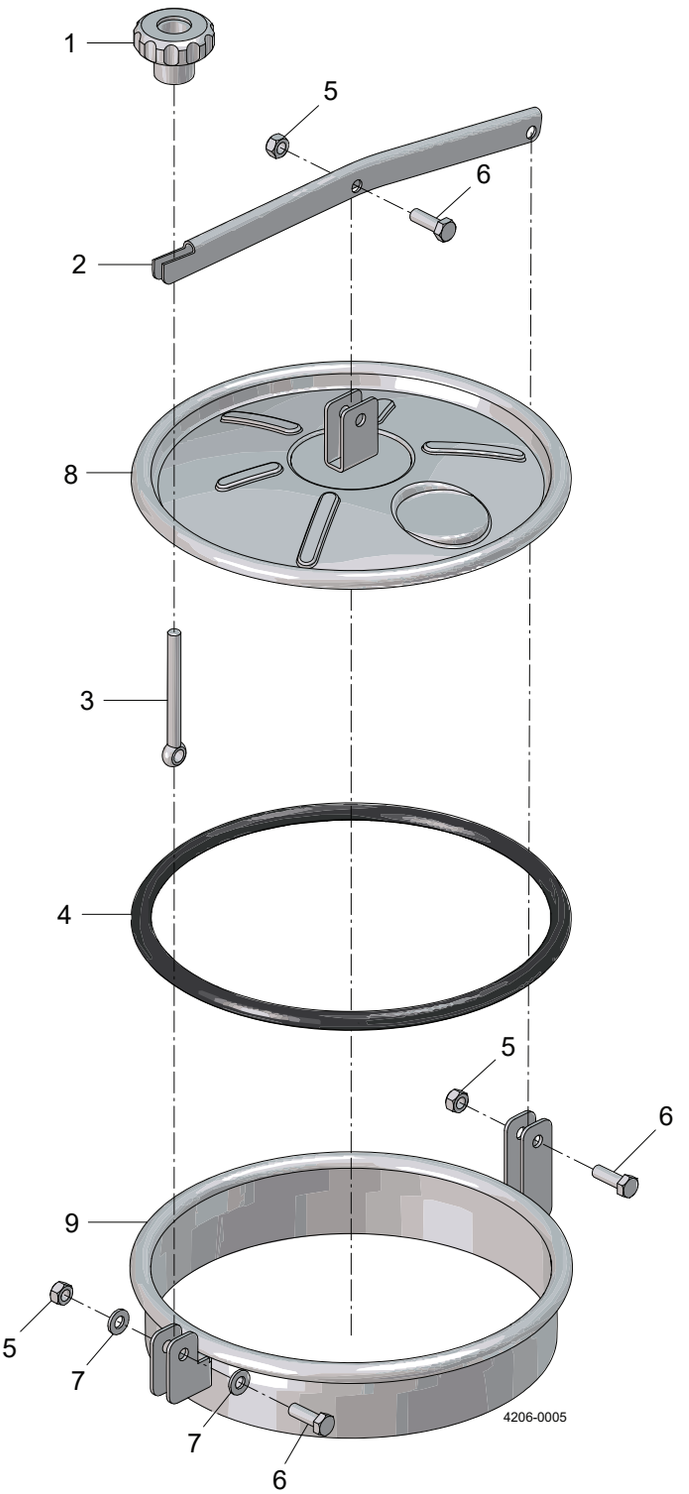

Pos	Qty	Denomination	1.4301 (304)	1.4404 (316L)
Circular Manhole Cover C-306				
1	1	Handle	9612990793	9612990793
	1	Handle Stainless	9613407201	9613407201
2	1	Toggle	9614209317	9614209317
3	1	Swing bolt	9614200101	9614200101
4	1	Seal EPDM (201010-)	9612990770	9612990770
	1	Seal NBR (201010-)	9612990771	9612990771
	1	Seal FPM (201010-)	9612990773	9612990773
	1	Seal SILICONE (Q) (201010-)	9612990772	9612990772
	1	Seal EPDM (-201010)	9612945052	9612945052
	1	Seal NBR (-201010)	9612945054	9612945054
	1	Seal FPM (-201010)	9612990754	9612990754
	1	Seal SILICONE (Q) (-201010-)	9612990753	9612990753
5	3	Nut	9614210506	9614210506
6	3	Screw	9614200102	9614200102
7	2	Washer	9614210802	9614210802
8	1	Cover		
9	1	Frame 65mm		
	1	Frame 100mm		
	1	Frame 150mm		
	1	Frame 200mm		

Recommended spare parts: Pos. 4.

TD 4206-0005

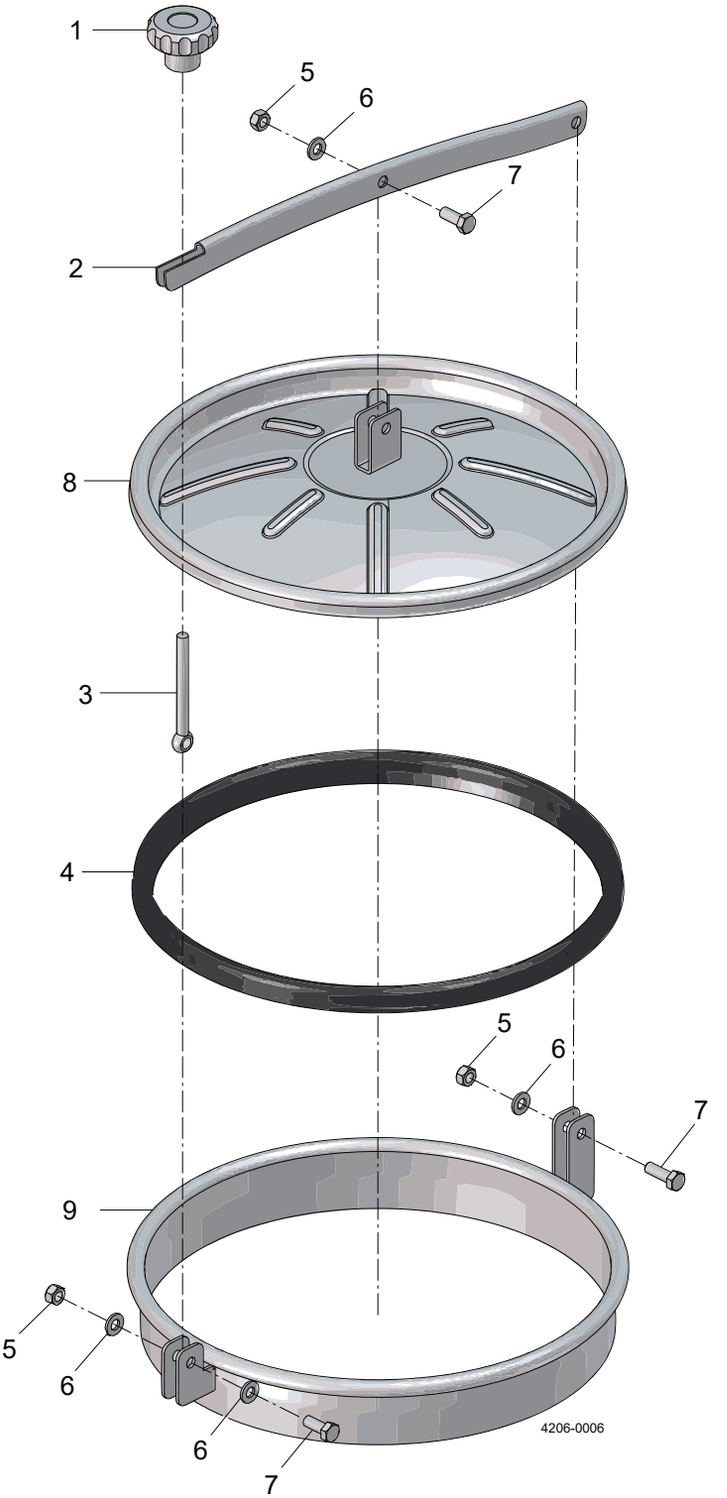
1
5
6
7
2
8
3
4
5
6
7
9
5
6
6
7
4206-0006

Pos	Qty	Denomination	1.4301 (304)	1.4404 (316L)
Circular Manhole Cover C-404				
1	1	Handle	9612990793	9612990793
	1	Handle Stainless	9613407201	9613407201
2	1	Toggle	9614209318	9614209318
3	1	Swing bolt	9614200101	9614200101
4	1	Seal EPDM	9612945019[1)]	9612945019[1)]
	1	Seal NBR	9612945021[1)]	9612945021[1)]
	1	Seal FPM	9612990727[1)]	9612990727[1)]
	1	Seal SILICONE (Q)	9613407236[1)]	9613407236[1)]
	1	Seal NBR		
	1	Seal EPDM	9614446206[2)]	9614446206[2)]
	1	Seal SILICONE (Q)	9614446207[2)]	9614446207[2)]
	1	Seal FPM	9614446208[2)]	9614446208[2)]
5	3	Nut	9614210506	9614210506
6	2	Washer	9614210802	9614210802
7	3	Screw	9614200102	9614200102
8	1	Cover		
9	1	Frame, 65mm		
	1	Frame, 100mm		
	1	Frame, 150mm		
	1	Frame, 200mm		

Recommended spare parts: Pos. 4.

[1)] For Covers from after September 2009

[2)] For Covers from before September 2009

TD 4206-0006

1.9

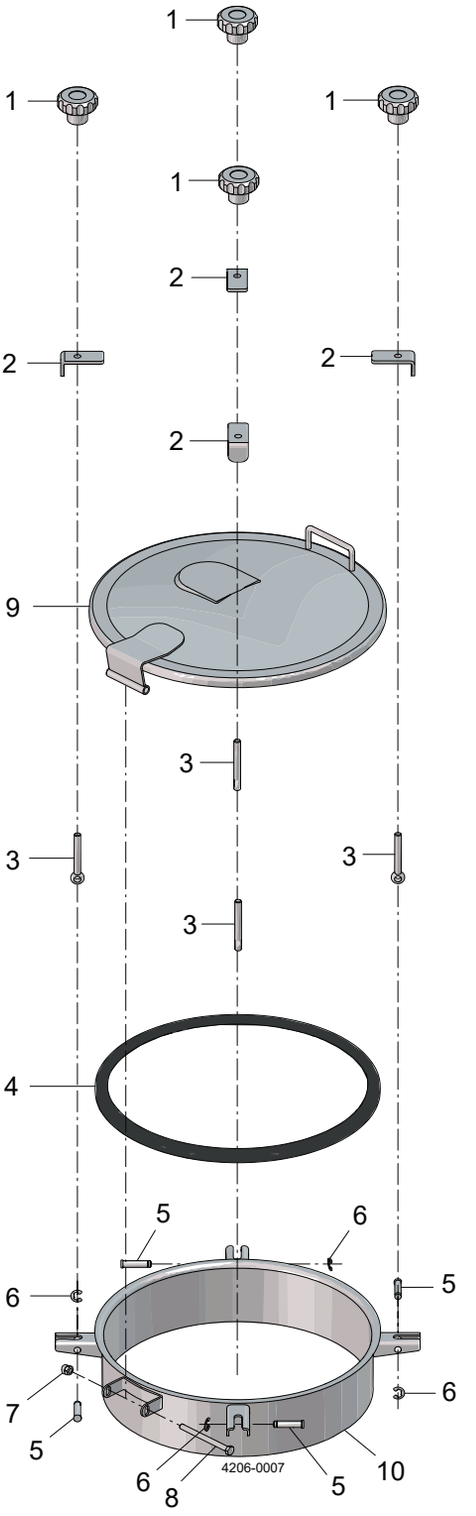

Pos	Qty	Denomination	1.4301 (304)	1.4404 (316L)
Circular Manhole Cover C-404AH4				
1	4	Handle	9612990793	9612990793
	4	Handle Wing	9614210316	9614210316
2	4	Swingbolt Bracket	9614209701	9614209701
3	4	Swing Bolt	9614210001	9614210001
4	1	Seal EPDM	9613437726	9613437726
	1	Seal NBR	9613437727	9613437727
	1	Seal FPM	9613437728	9613437728
	1	Seal SILICONE (Q)	9613437729	9613437729
5	4	Pin	9614210201	9614210201
6	4	Retaining ring	9614210701	9614210701
7	1	Nut	9614210507	9614210507
8	1	Screw	9614210402	9614210402
9	1	Cover		
10	1	Frame, 65mm		
	1	Frame, 100mm		

Recommended spare parts: Pos. 4.

TD 4206-0007

1.9

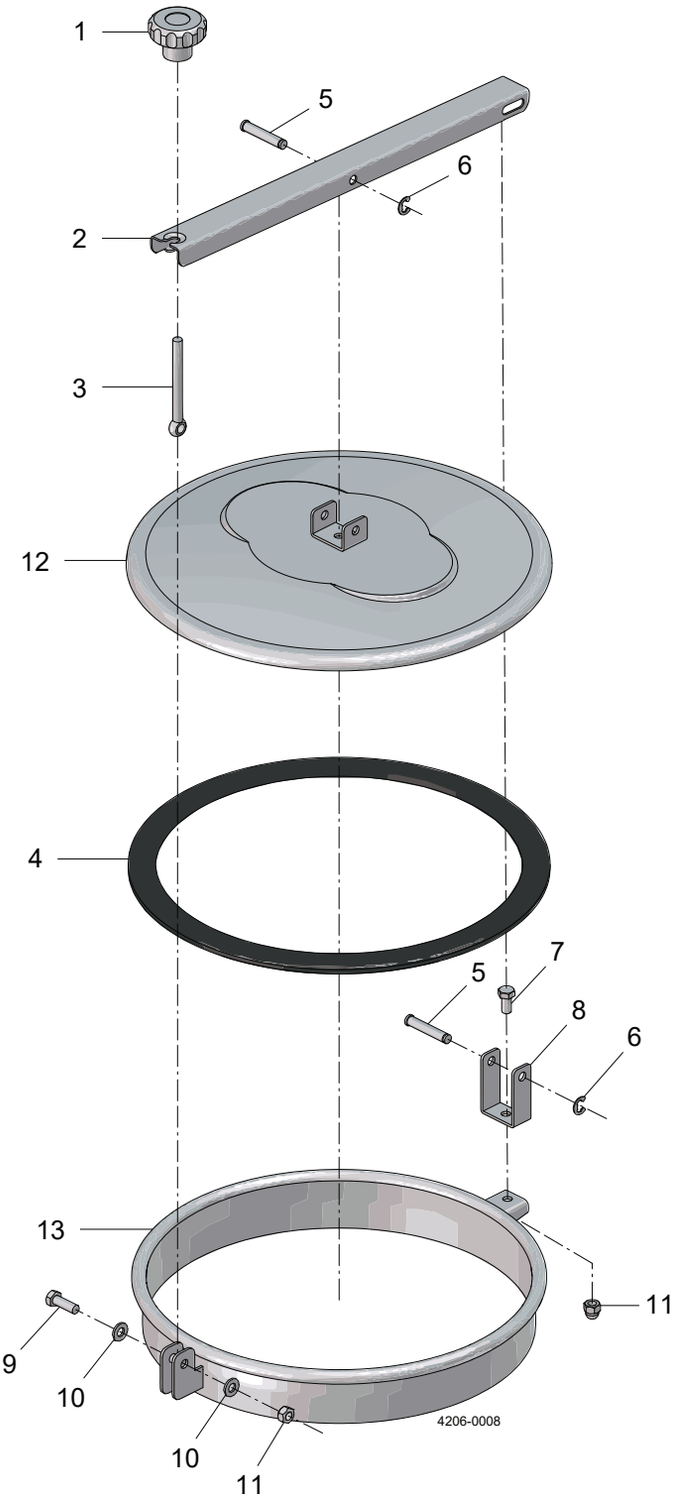

Pos	Qty	Denomination	1.4301 (304)	1.4404 (316L)
Circular Manhole Cover C-404ASB				
1	1	Handle	9612990793	9612990793
	1	Handle Stainless	9613407201	9613407201
2	1	Toggle	9614209319	9614209319
3	1	Swing bolt	9614200101	9614200101
4	1	Seal EPDM	9612990851	9612990851
	1	Seal NBR	9612990853	9612990853
	1	Seal FPM	9612990855	9612990855
	1	Seal SILICONE (Q)	9612990854	9612990854
5	2	Pin	9614210202	9614210202
6	2	Retaining ring	9614210701	9614210701
7	1	Screw	9614210403	9614210403
8	1	U-Bracket	9614209601	9614209601
9	1	Screw	9614210405	9614210405
10	2	Washer	9614210802	9614210802
11	2	Nut	9614210506	9614210506
12	1	Cover		
13	1	Frame, 65mm		
	1	Frame, 100mm		

Recommended spare parts: Pos. 4.

TD 4206-0008

1.9

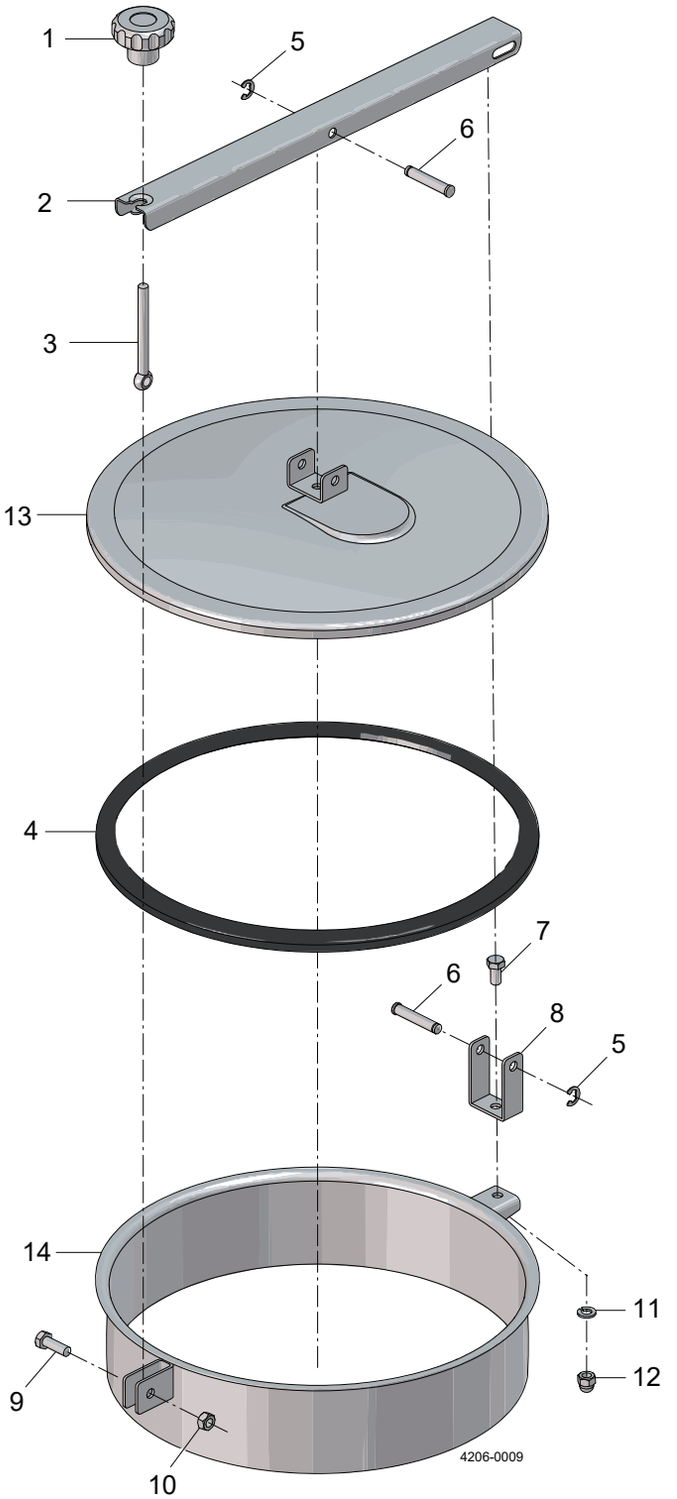

Pos	Qty	Denomination	1.4301 (304)	1.4404 (316L)
Circular Manhole Cover C-404BSB				
1	1	Handle	9612990793	9612990793
	1	Handle Stainless	9613407201	9613407201
2	1	Toggle	9614209319	9614209319
3	1	Swing bolt	9614200101	9614200101
4	1	Seal EPDM	9613437726	9613437726
	1	Seal NBR	9613437727	9613437727
	1	Seal FPM	9613437728	9613437728
	1	Seal SILICONE (Q)	9613437729	9613437729
5	2	Retaining ring	9614210701	9614210701
6	2	Pin	9614210202	9614210202
7	1	Screw	9614210403	9614210403
8	1	U-Bracket	9614209601	9614209601
9	1	Screw	9614200102	9614200102
10	2	Nut	9614210506	9614210506
11	1	Washer	9614210805	9614210805
12	1	Nut	9614210503	9614210503
13	1	Cover		
14	1	Frame, 65mm		
	1	Frame, 100mm		
	1	Frame, 150mm		
	1	Frame, 200mm		

Recommended spare parts: Pos. 4.

TD 4206-0009

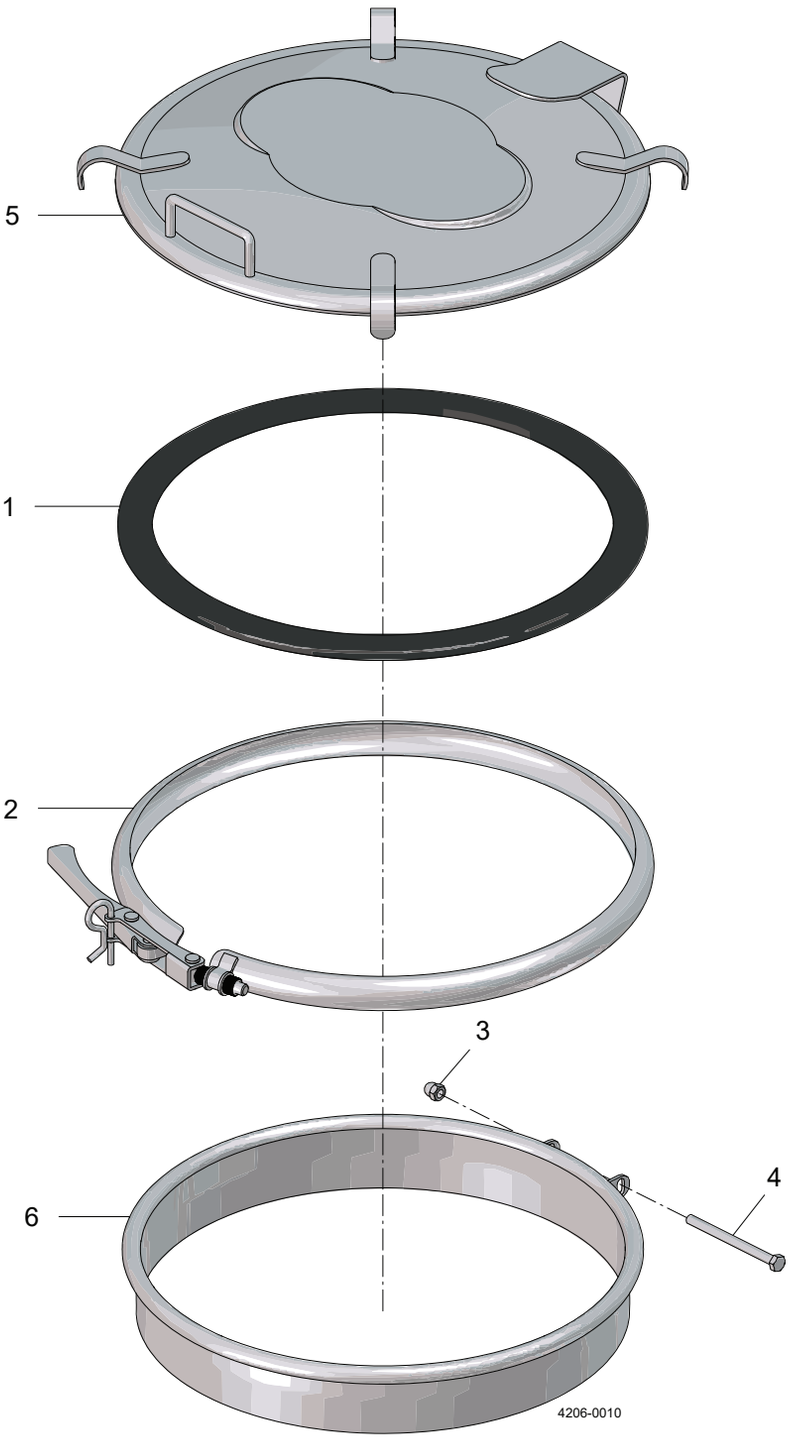
5
1
2
3
4
6
4206-0010

Pos	Qty	Denomination	1.4301 (304)	1.4404 (316L)
Circular Manhole Cover C-404CC				
1	1	Seal EPDM	9612990851	9612990851
	1	Seal NBR	9612990853	9612990853
	1	Seal FPM	9612990855	9612990855
	1	Seal Silicone (Q)	9612990854	9612990854
2	1	Locking Clamp	9614209501	9614209501
3	1	Nut	9614210507	9614210507
4	1	Screw	9614210402	9614210402
5	1	Cover		
6	1	Frame		

Recommended spare parts: Pos. 1.

TD 4206-0010

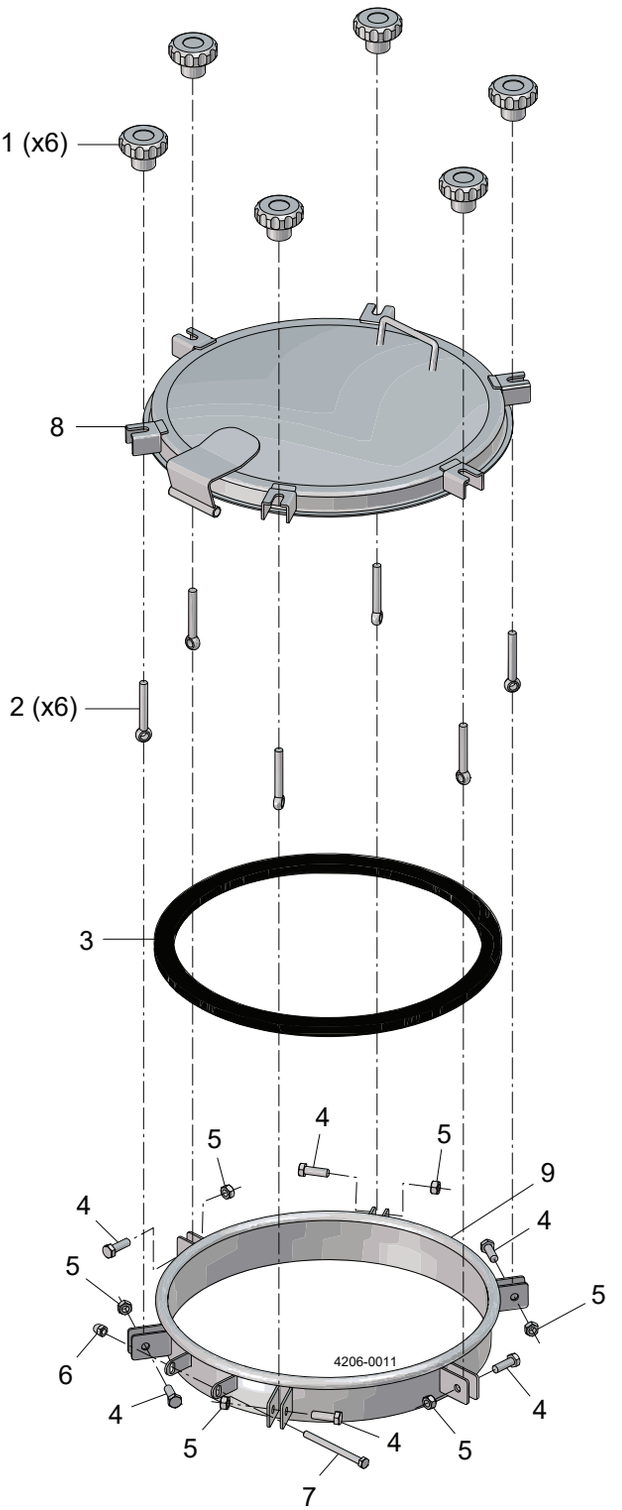
1 (x6)
8
2 (x6)
3
4
5
5
9
4
4
5
5
6
4
5
4
5
4
7
4206-0011

Pos	Qty	Denomination	1.4301 (304)	1.4404 (316L)
Circular Manhole Cover C-404H6				
1	6	Handle	9612990793	9612990793
		Handle Stainless	9613407202	9613407202
2	6	Swing Bolt	9614210001	9614210001
3	1	Seal EPDM	9612945016	9612945016
	1	Seal NBR	9612945018	9612945018
	1	Seal FPM	9612990724	9612990724
	1	Seal Silicone (Q)	9612990723	9612990723
4	6	Screw	9614210405	9614210405
5	6	Nut	9614210506	9614210506
6	1	Nut	9614210507	9614210507
7	1	Screw	9614210402	9614210402
8	1	Cover		
9	1	Frame, 65mm		
	1	Frame, 100mm		
	1	Frame, 150mm		
	1	Frame, 200mm		

Recommended spare parts: Pos. 3.

TD 4206-0011

1.9

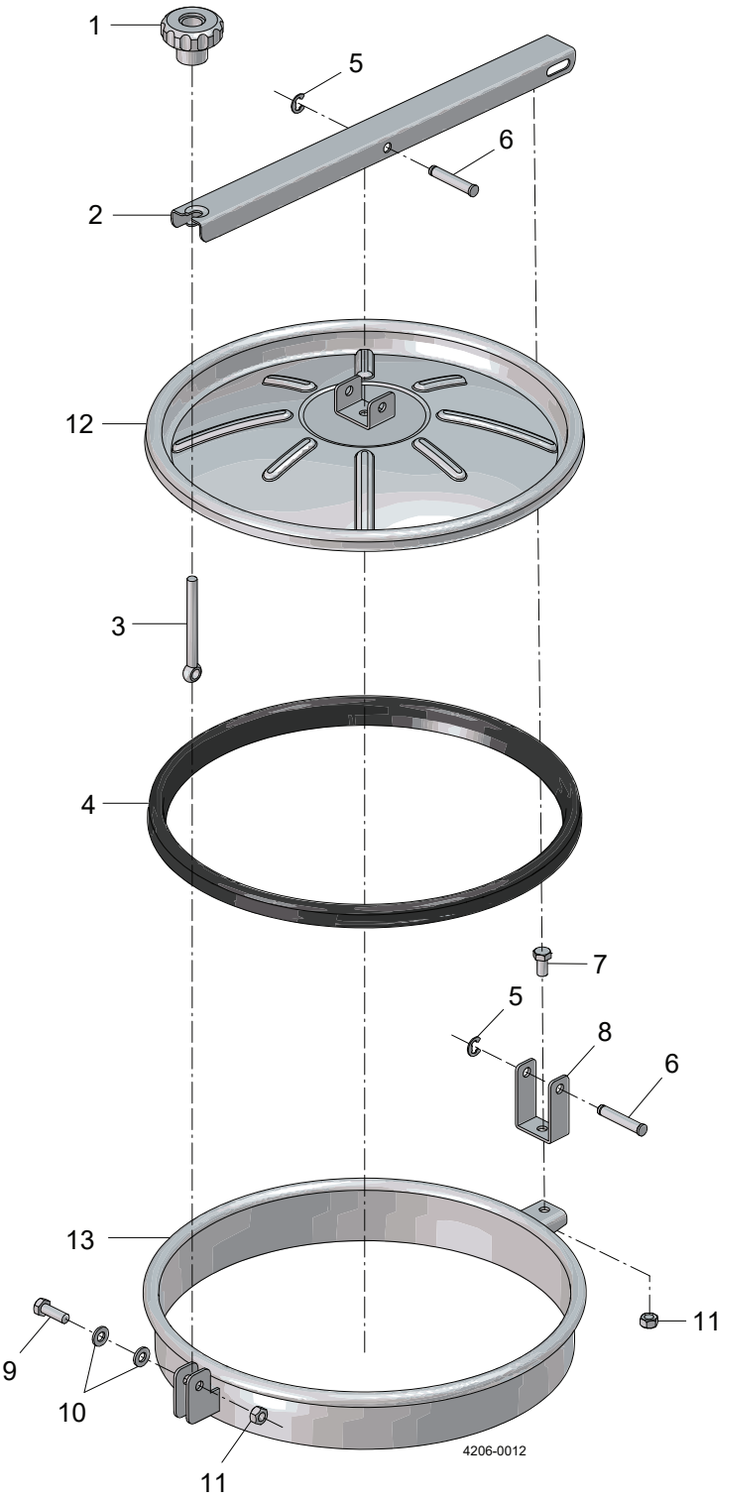

Pos	Qty	Denomination	1.4301 (304)	1.4404 (316L)
Circular Manhole Cover C-404SB				
1	1	Handle	9612990796	9612990796
	1	Handle Stainless	9613407201	9613407201
2	1	Toggle	9614209319	9614209319
3	1	Swing Bolt	9614210001	9614210001
4	1	Seal , EPDM	9612945019[1)]	9612945019[1)]
	1	Seal, NBR	9612945021[1)]	9612945021[1)]
	1	Seal, FPM	9612990727[1)]	9612990727[1)]
	1	Seal, Silicone (Q)	9613407236[1)]	9613407236[1)]
	1	Seal, NBR		
	1	Seal, EPDM	9614446206[2)]	9614446206[2)]
	1	Seal, SILICONE (Q)	9614446207[2)]	9614446207[2)]
	1	Seal, FPM	9614446208[2)]	9614446208[2)]
5	2	Retaining ring	9614210701	9614210701
6	2	Pin	9614210202	9614210202
7	2	Screw	9614210403	9614210403
8	1	U-Bracket	9614209601	9614209601
9	1	Screw	9614200102	9614200102
10	2	Washer	9614210802	9614210802
11	2	Nut	9614210506	9614210506
12	1	Cover		
13	1	Frame, 65mm		
	1	Frame, 100mm		
	1	Frame, 150mm		

Recommended spare parts: Pos. 4.

1) For Covers from after September 2009

2) For Covers from before September 2009

TD 4206-0012

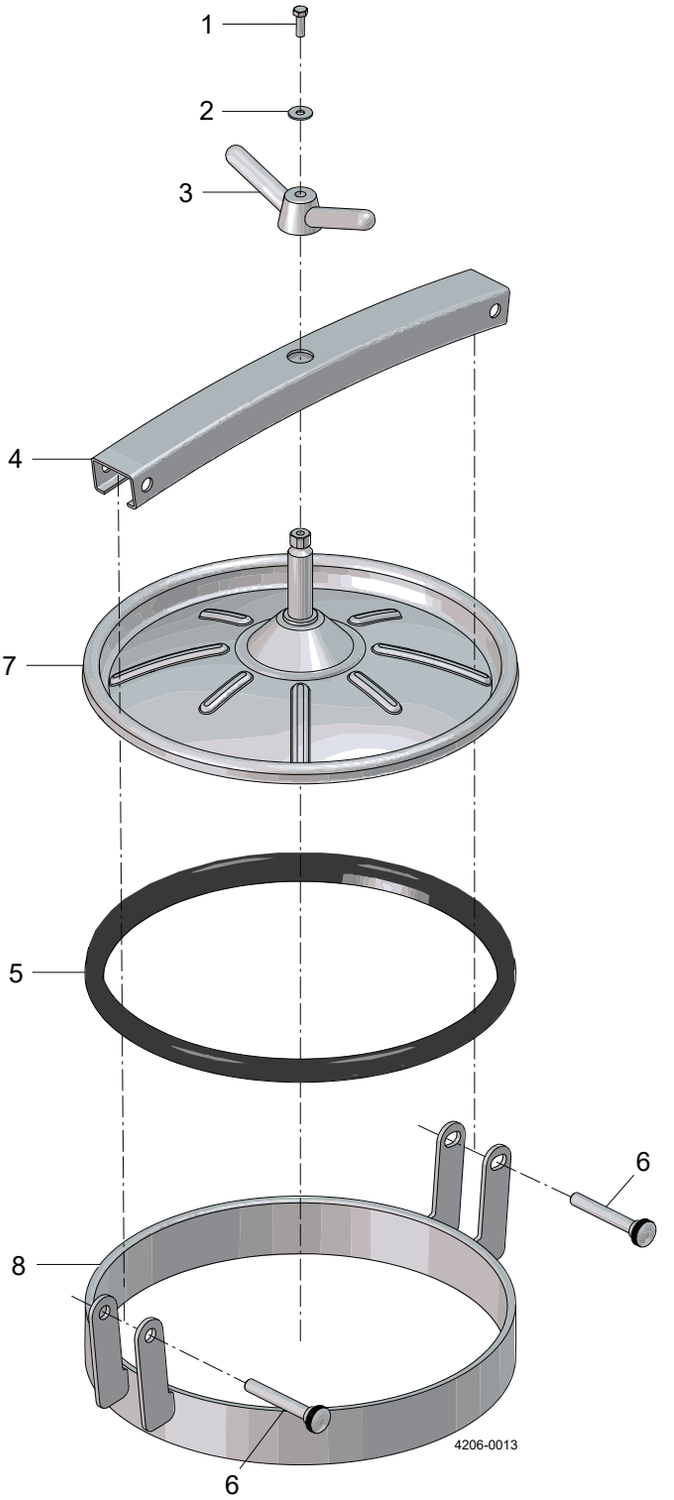
1
2
3
4
7
5
6
8
6
4206-0013

Pos	Qty	Denomination	1.4301 (304)	1.4404 (316L)
Circular Manhole Cover C-418				
1	1	Screw	9614210401	9614210401
2	1	Washer	9614210801	9614210801
3	1	Handle	9612990784	9612990784
4	1	Toggle	9614209320	9614209320
5	1	Seal EPDM	9612945019[1)]	9612945019[1)]
	1	Seal NBR	9612945021[1)]	9612945021[1)]
	1	Seal FPM	9612990727[1)]	9612990727[1)]
	1	Seal Silicone (Q)	9613407236[1)]	9613407236[1)]
	1	Seal NBR		
	1	Seal EPDM	9614446206[2)]	9614446206[2)]
	1	Seal SILICONE (Q)	9614446207[2)]	9614446207[2)]
	1	Seal FPM	9614446208[2)]	9614446208[2)]
6	2	Bolt	9614210209	9614210209
7	1	Cover		
8	1	Frame		

Recommended spare parts: Pos. 5.

[1)] For Covers from after September 2009

[2)] For Covers from before September 2009

TD 4206-0013

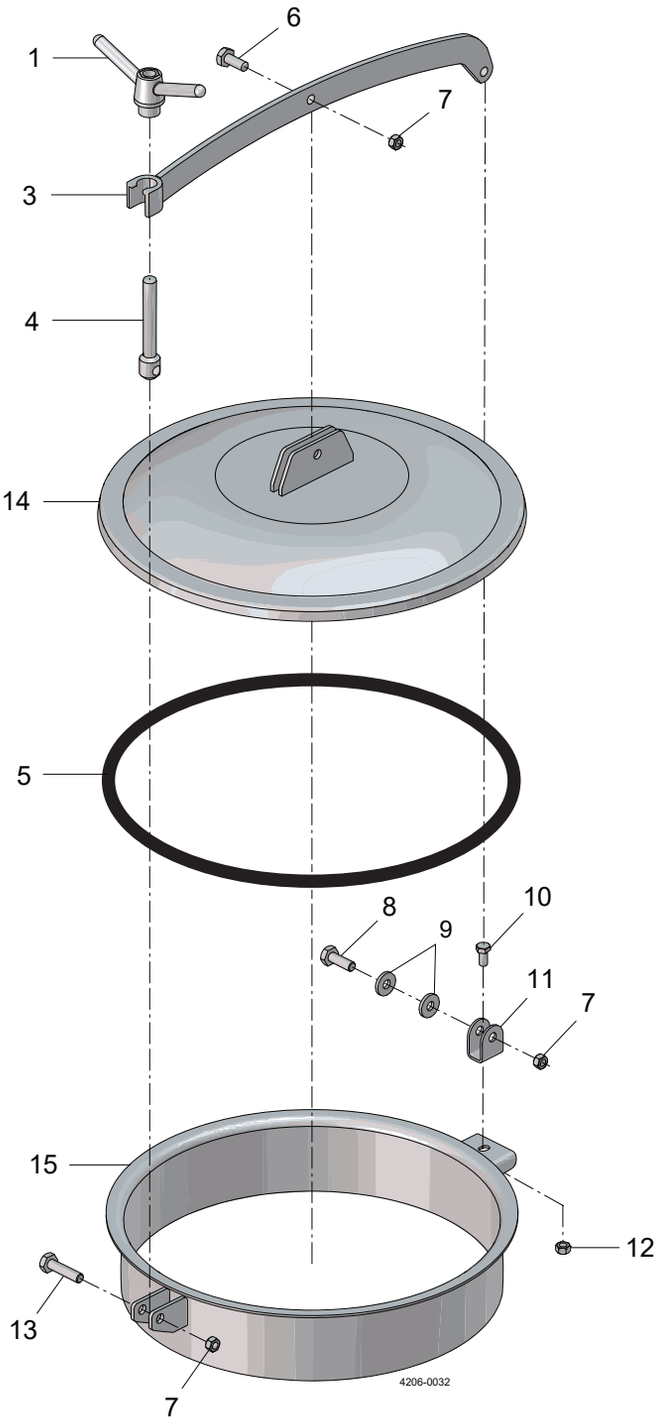
6
1
7
3
4
14
5
8
9
10
11
7
15
12
13
7
4206-0032

Pos	Qty	Denomination	1.4301 (304)	1.4404 (316L)
Circular Manhole Cover C-454				
1	1	Handle wing	8010008194	8010008194
	1	Handle round	9614210314	9614210314
2	1	Washer *	9611995390	9611995390
3	1	Toggle	9614209330	9614209330
4	1	Swing bolt	9614210007	9614210007
5	1	Seal EPDM	9613437736	9613437736
	1	Seal NBR	9613437737	9613437737
	1	Seal FPM	9613437738	9613437738
	1	Seal Silicone (Q)	9613437739	9613437739
6	1	Screw	9614210410	9614210410
7	3	Nut	9614210505	9614210505
8	1	Screw	9614210412	9614210412
9	2	Washer	9614210813	9614210813
10	1	Screw	9614210403	9614210403
11	1	U-Bracket	9614209603	9614209603
12	1	Nut	9614210506	9614210506
13	1	Screw	9614210411	9614210411
14	1	Cover		
15	1	Frame, 100mm		
	1	Frame, 150mm		
	1	Frame, 200mm		

* Only valid for handles available before April 2021.

Recommended spare parts: Pos. 5.

TD 4206-0014

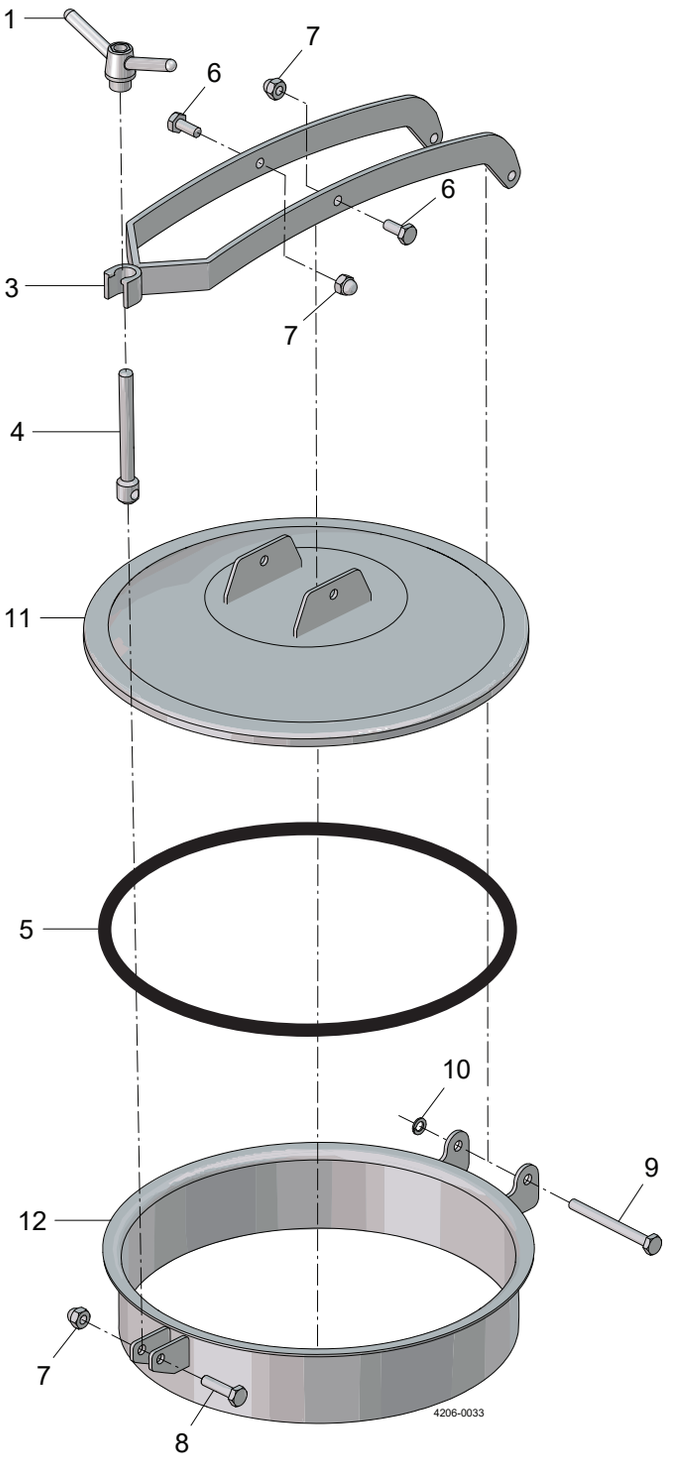
1
7
6
6
3
7
4
11
5
10
9
12
7
8
4206-0033

Pos	Qty	Denomination	1.4301 (304)A	1.4404 (316L)
Circular Manhole Cover C-454A				
1	1	Handle wing	8010008194	8010008194
	1	Handle round	9612990792	9612990792
2	1	Washer*	9611995390	9611995390
3	1	Toggle	9614209324	9614209324
4	1	Swing bolt	9614210006	9614210006
5	1	Seal EPDM	9613437736	9613437736
	1	Seal NBR	9613437737	9613437737
	1	Seal FPM	9613437738	9613437738
	1	Seal Silicone (Q)	9613437739	9613437739
6	2	Screw	9614210410	9614210410
7	3	Nut	9614210505	9614210505
8	1	Screw	9614210411	9614210411
9	1	Bolt	9614210210	9614210210
10	1	Retaining ring	9613437762	9613437762
11	1	Cover		
12	1	Frame, 100mm		
	1	Frame, 150mm		
	1	Frame, 200mm		

* Only valid for handles available before April 2021.

Recommended Spare parts: Pos. 5.

TD 4206-0015

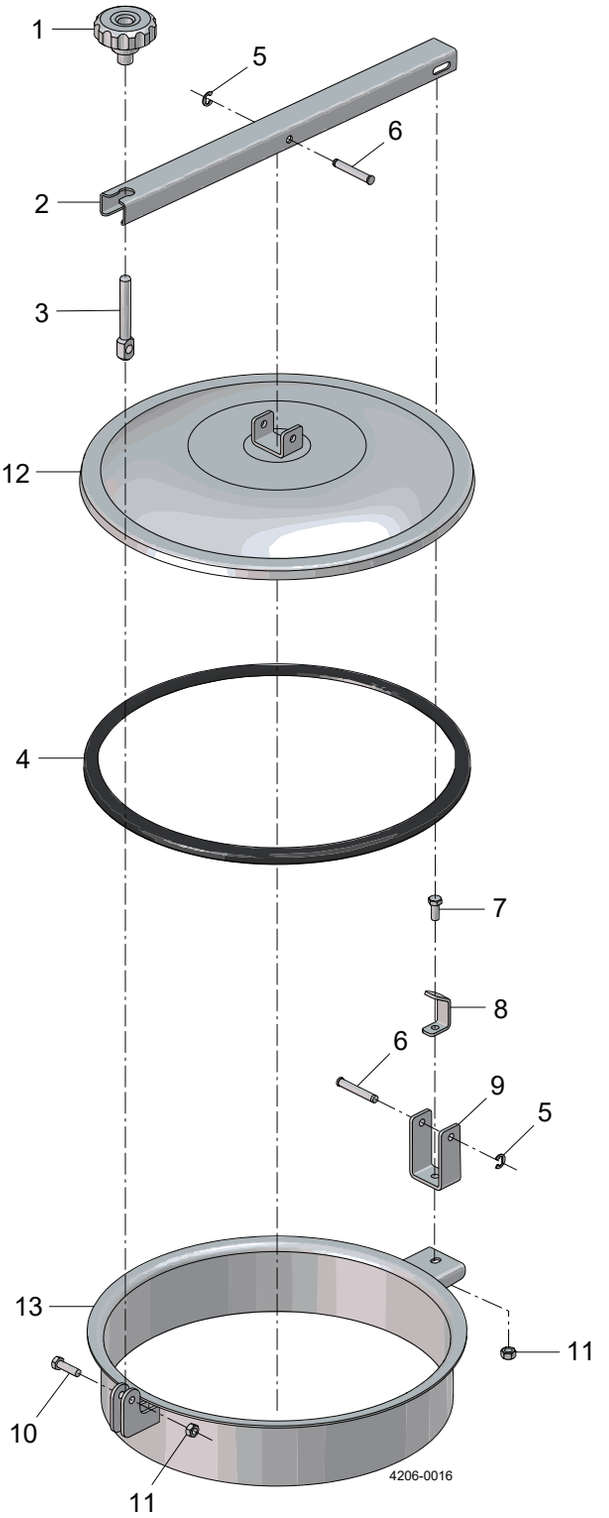
1
5
6
2
3
12
4
7
8
6
9
5
13
11
10
11
4206-0016

Pos	Qty	Denomination	1.4301 (304)	1.4404 (316L)
Circular Manhole Cover C-454SB				
1	1	Handle	9612990796	9612990796
	1	Handle Stainless	9614210313	9614210313
2	1	Toggle	9614209334	9614209334
3	1	Swingbolt	9614210003	9614210003
4	1	Seal EPDM	9613437736	9613437736
	1	Seal NBR	9613437737	9613437737
	1	Seal FPM	9613437738	9613437738
	1	Seal Silicone (Q)	9613437739	9613437739
5	2	Retaining ring	9614210701	9614210701
6	2	Pin	9614210203	9614210203
7	1	Screw	9614210404	9614210404
8	1	Stop arm	9614209901	9614209901
9	1	U-Bracket	9614209602	9614209602
10	1	Screw	9614210406	9614210406
11	2	Nut	9614210506	9614210506
12	1	Cover		
13		Frame, 100mm		
		Frame, 150mm		
		Frame, 200mm		

Recommended spare parts: Pos. 4.

TD 4206-0016

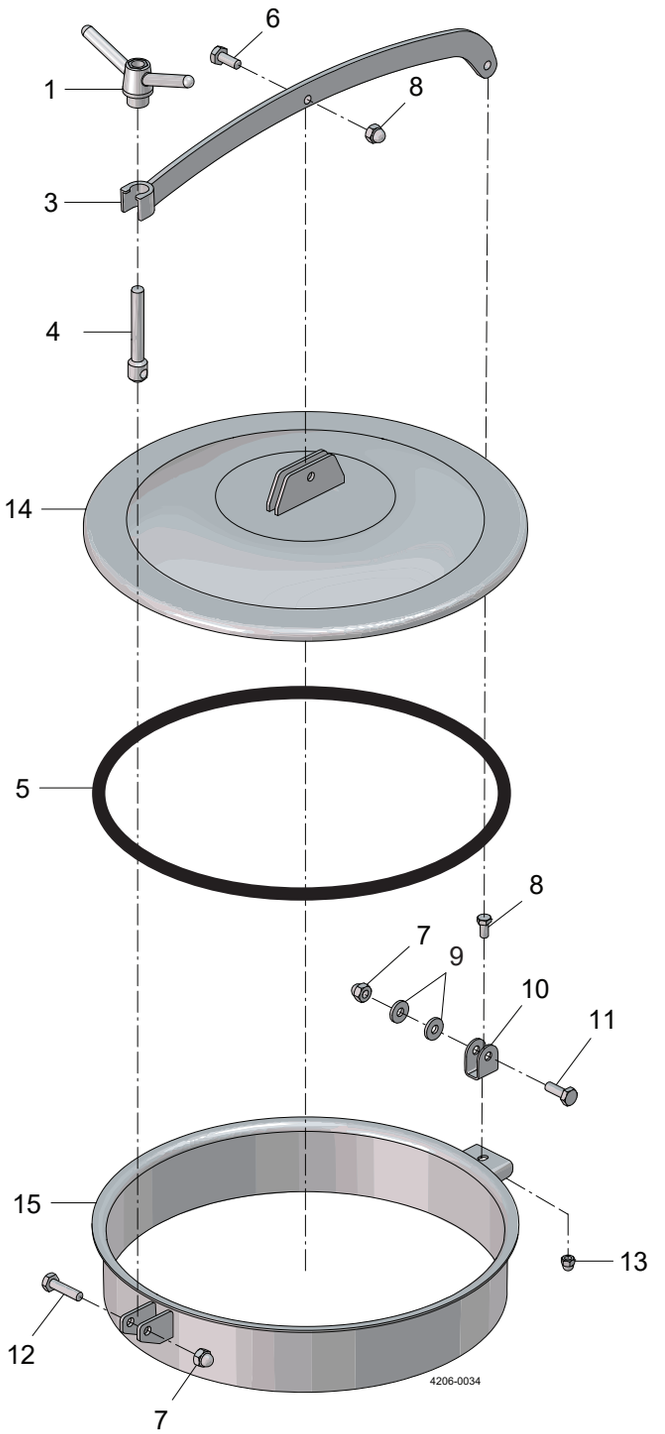
6
1
8
3
4
14
5
8
7
9
10
11
15
13
12
7
4206-0034

Pos	Qty	Denomination	1.4301 (304)	1.4404 (316L)
Circular Manhole Cover C-518 (Previously C-520)				
1	1	Handle Wing	8010008194	8010008194
	1	Handle Round	9614210314	9614210314
2	1	Washer*	9611995390	9611995390
3	1	Toggle	9614209332	9614209332
4	1	Swing bolt	9614210007	9614210007
5	1	Seal EPDM	9613437746	9613437746
	1	Seal NBR	9613437747	9613437747
	1	Seal FPM	9613437748	9613437748
	1	Seal SILICONE (Q)	9613437749	9613437749
6	1	Screw	9614210410	9614210410
7	3	Nut	9614210505	9614210505
8	3	Screw	9614210403	9614210403
9	2	Washer	9614210813	9614210813
10	2	U-Bracket	9614209603	9614209603
11	1	Screw	9614210412	9614210412
12	1	Screw	9614210411	9614210411
13	1	Nut	9614210506	9614210506
14	1	Cover		
15	1	Frame, 100mm		
	1	Frame, 150mm		
	1	Frame, 200mm		

* Only valid for handles available before April 2021.

Recommended spare parts: Pos. 5.

TD 4206-0019

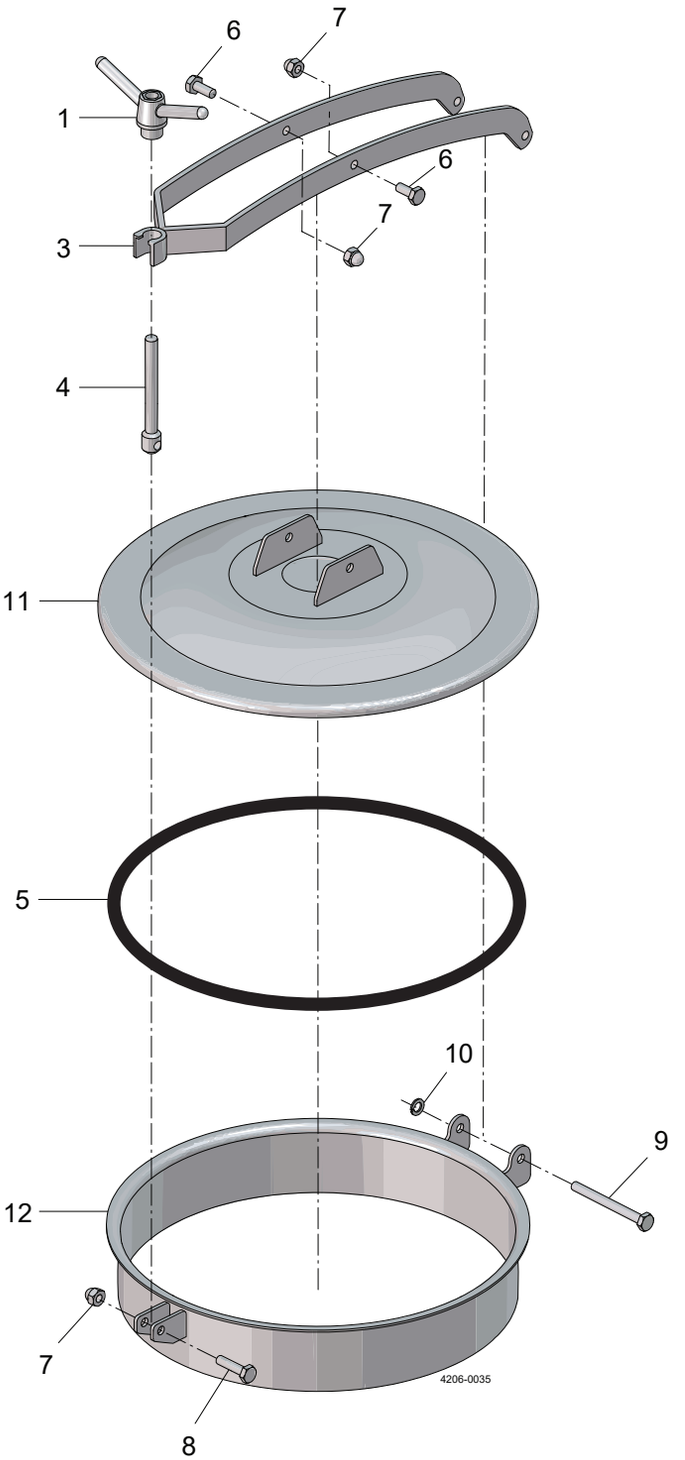
6
7
1
6
7
3
4
11
5
10
9
12
7
8
4206-0035

Pos	Qty	Denomination	1.4301 (304)	1.4404 (316L)
Circular Manhole Cover 518A (Previously C-520A)				
1	1	Handle wing	8010008194	8010008194
	1	Handle round	9612990792	9612990792
2	1	Washer*	9611995390	9611995390
3	1	Toggle	9614209326	9614209326
4	1	Swing bolt	9614210006	9614210006
5	1	Seal EPDM	9613437746	9613437746
	1	Seal NBR	9613437747	9613437747
	1	Seal FPM	9613437748	9613437748
	1	Seal SILICONE (Q)	9613437749	9613437749
6	2	Screw	9614210410	9614210410
7	3	Nut	9614210505	9614210505
8	1	Screw	9614210411	9614210411
9	1	Bolt	9614210210	9614210210
10	1	Retaining ring	9613437762	9613437762
11	1	Cover		
12	1	Frame, 100mm		
	1	Frame, 150mm		
	1	Frame, 200mm		

* Only valid for handles available before April 2021.

Recommended spare parts: Pos. 5.

TD 4206-0020

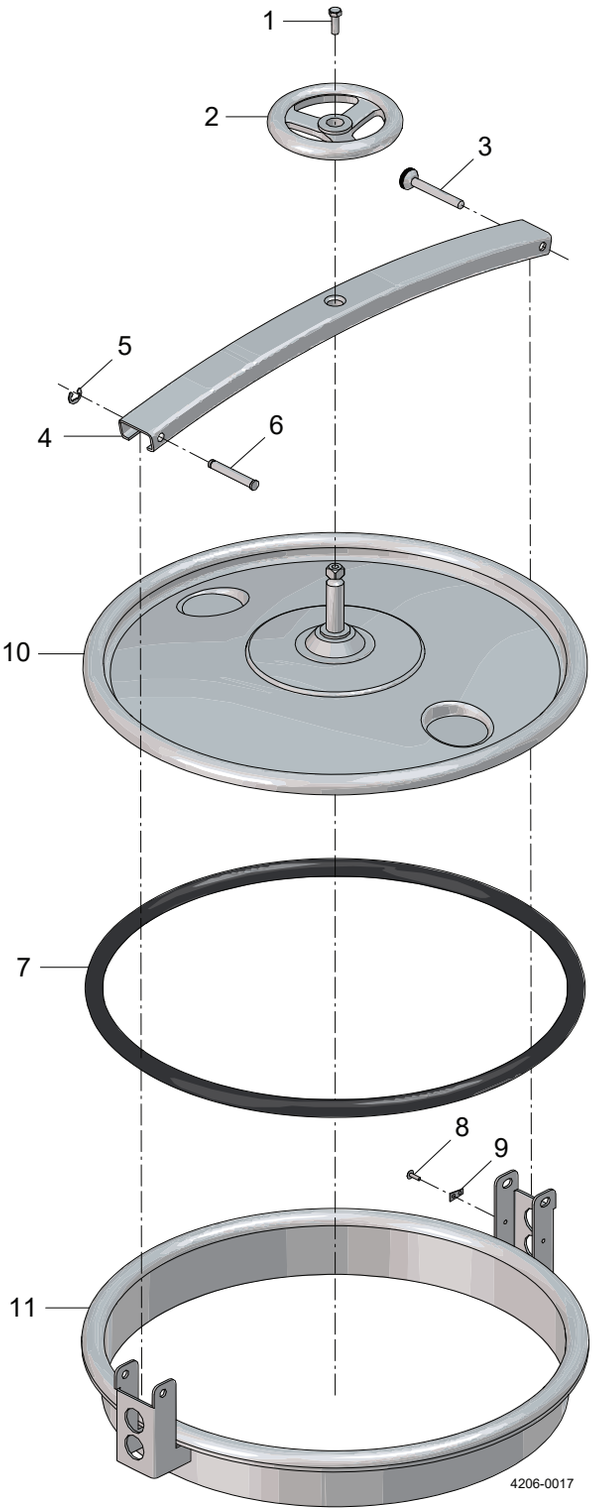
1
2
3
5
4
6
10
7
8
9
11
4206-0017

Pos	Qty	Denomination	1.4301 (304)	1.4404 (316L)
Circular Manhole Cover C-518MH				
1	1	Screw	9614210401	9614210401
2	1	Handle	9614210312	9614210312
3	1	Bolt	9614210208	9614210208
4	1	Toggle	9614209337	9614209337
5	1	Retaining ring	9614210701	9614210701
6	1	Pin	9613456819	9613456819
7	1	Seal EPDM	9612945058	9612945058
	1	Seal NBR	9612945060	9612945060
	1	Seal FPM	9612990761	9612990761
	1	Seal SILICONE (Q)	9612990759	9612990759
8	1	Rivet	9614210601	9614210601
9	1	Bracket for rivet	9614209801	9614209801
10	1	Cover		
11	1	Frame		

Recommended spare parts: Pos. 7.

TD 4206-0017

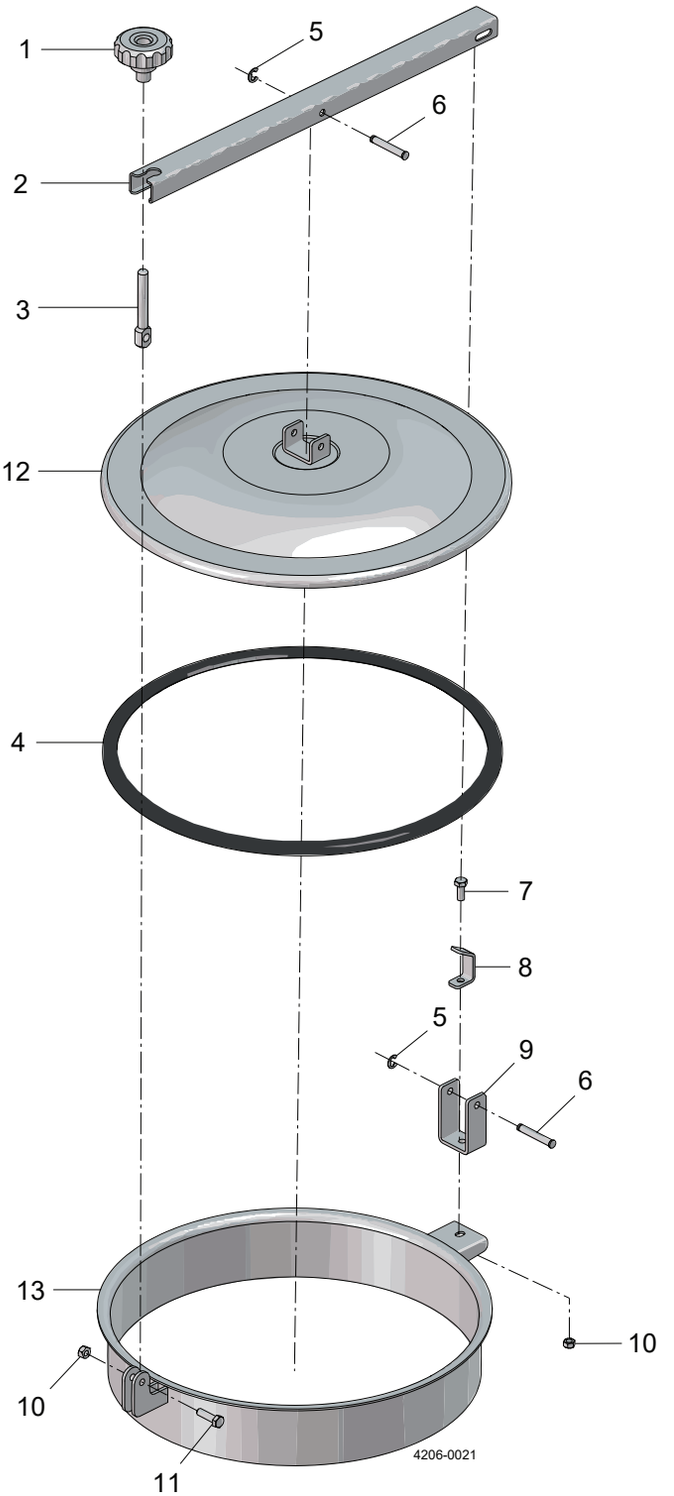
1
5
6
2
3
12
4
7
8
5
9
6
13
10
10
11
4206-0021

Pos	Qty	Denomination	1.4301 (304)	1.4404 (316L)
Circular Manhole Cover C-518SBAR (Previously C-520SB)				
1	1	Handle	9612990796	9612990796
	1	Handle stainless	9613407202	9613407202
2	1	Toggle	9614209335	9614209335
3	1	Swingbolt	9614210003	9614210003
4	1	Seal EPDM	9613437746	9613437746
	1	Seal NBR	9613437747	9613437747
	1	Seal FPM	9613437748	9613437748
	1	Seal SILICONE (Q)	9613437749	9613437749
5	2	Retaining ring	9614210701	9614210701
6	2	Pin	9614210203	9614210203
7	1	Screw	9614210404	9614210404
8	1	Stop arm	9614209901	9614209901
9	1	U-Bracket	9614209602	9614209602
10	2	Nut	9614210506	9614210506
11	1	Screw	9614210406	9614210406
12	1	Cover		
13	1	Frame, 100mm		
	1	Frame, 150mm		
	1	Frame, 200mm		

Recommended spare parts: Pos. 4.

TD 4206-0021

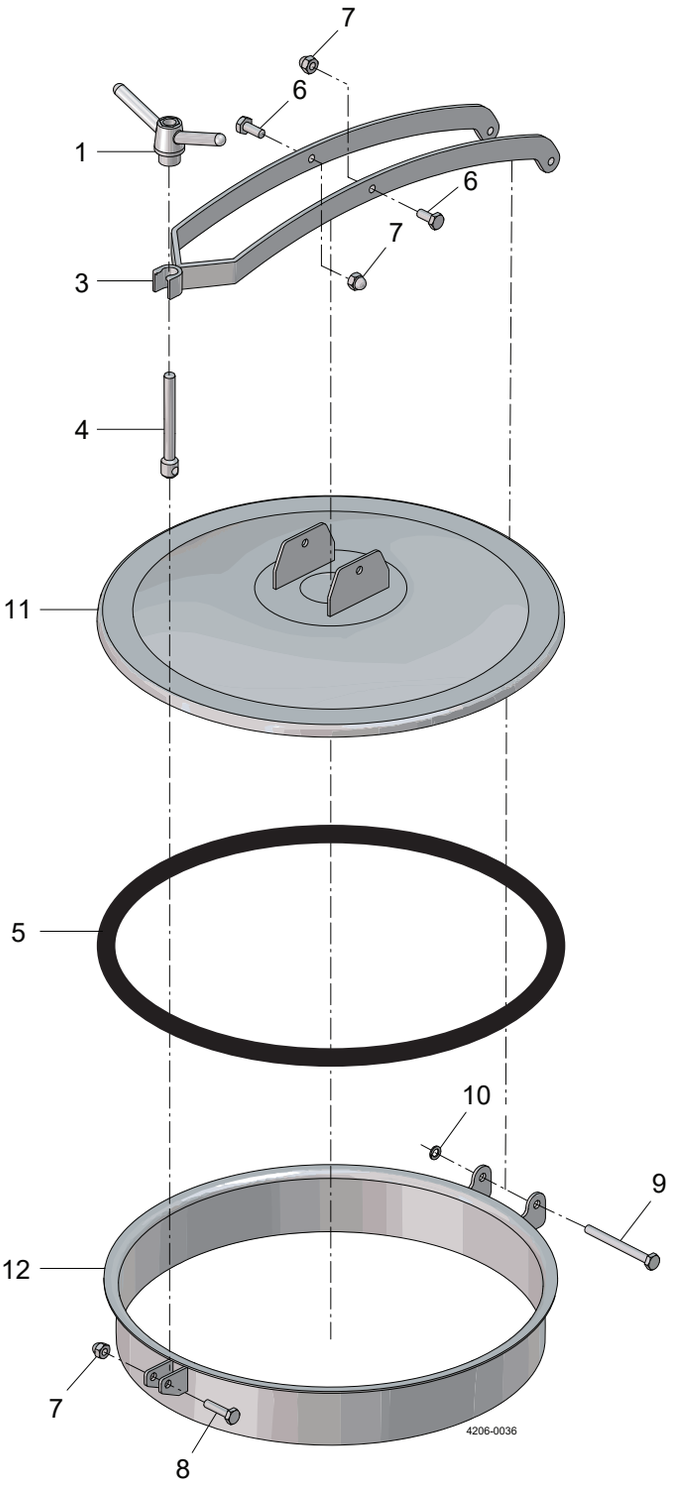
7
6
1
6
7
3
4
11
5
10
9
12
7
8
4206-0036

Pos	Qty	Denomination	1.4301 (304)	1.4404 (316L)
Circular Manhole Cover C-620A				
1	1	Handle wing	8010008194	8010008194
	1	Handle round	9612990792	9612990792
2	1	Washer*	9611995390	9611995390
3	1	Toggle	9614209328	9614209328
4	1	Swing bolt	9614210006	9614210006
5	1	Seal EPDM	9613437756	9613437756
	1	Seal NBR	9613437757	9613437757
	1	Seal FPM	9613437758	9613437758
	1	Seal SILICONE (Q)	9613437759	9613437759
6	2	Screw	9614210410	9614210410
7	3	Nut	9614210505	9614210505
8	1	Screw	9614210411	9614210411
9	1	Bolt	9614210210	9614210210
10	1	Retaining ring	9613437762	9613437762
11	1	Cover		
12	1	Frame, 100mm		
	1	Frame, 150mm		
	1	Frame, 200mm		

* Only valid for handles available before April 2021.

Recommended spare parts: Pos. 5.

TD 4206-0022

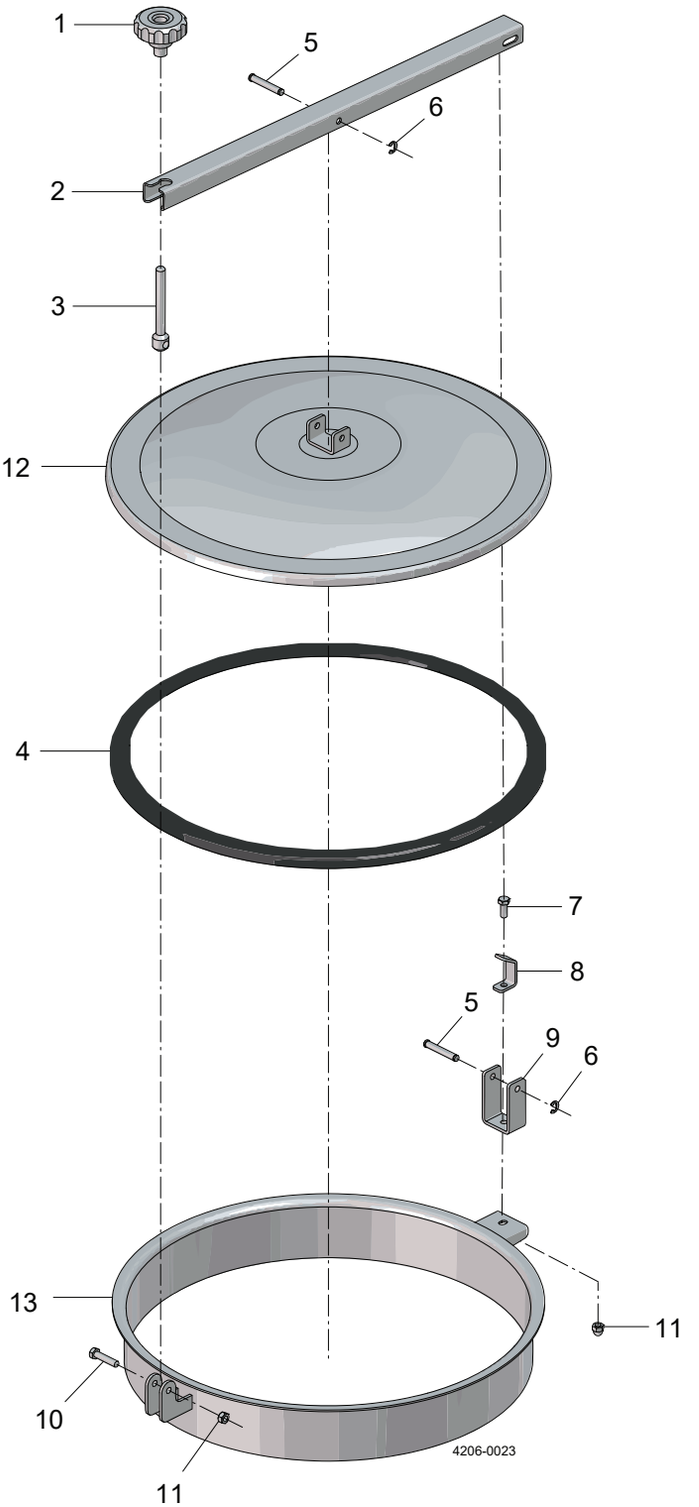
1
5
6
2
3
12
4
7
8
5
9
6
13
11
10
11
4206-0023

Pos	Qty	Denomination	1.4301 (304)	1.4404 (316L)
Circular Manhole Cover C-620SB				
1	1	Handle	9612990796	9612990796
	1	Handle stainless	9613407202	9613407202
2	1	Toggle	9614209336	9614209336
3	1	Swingbolt	9614210004	9614210004
4	1	Seal EPDM	9613437756	9613437756
	1	Seal NBR	9613437757	9613437757
	1	Seal FPM	9613437758	9613437758
	1	Seal SILICONE (Q)	9613437759	9613437759
5	2	Pin	9614210203	9614210203
6	2	Retaining ring	9614210701	9614210701
7	1	Screw	9614210404	9614210404
8	1	Stop arm	9614209901	9614209901
9	1	U-Bracket	9614209602	9614209602
10	1	Screw	9614210407	9614210407
11	2	Nut	9614210506	9614210506
12	1	Cover		
13	1	Frame, 100mm		
	1	Frame, 150mm		
	1	Frame, 200mm		

Recommended spare parts: Pos. 4.

TD 4206-0023

1.9

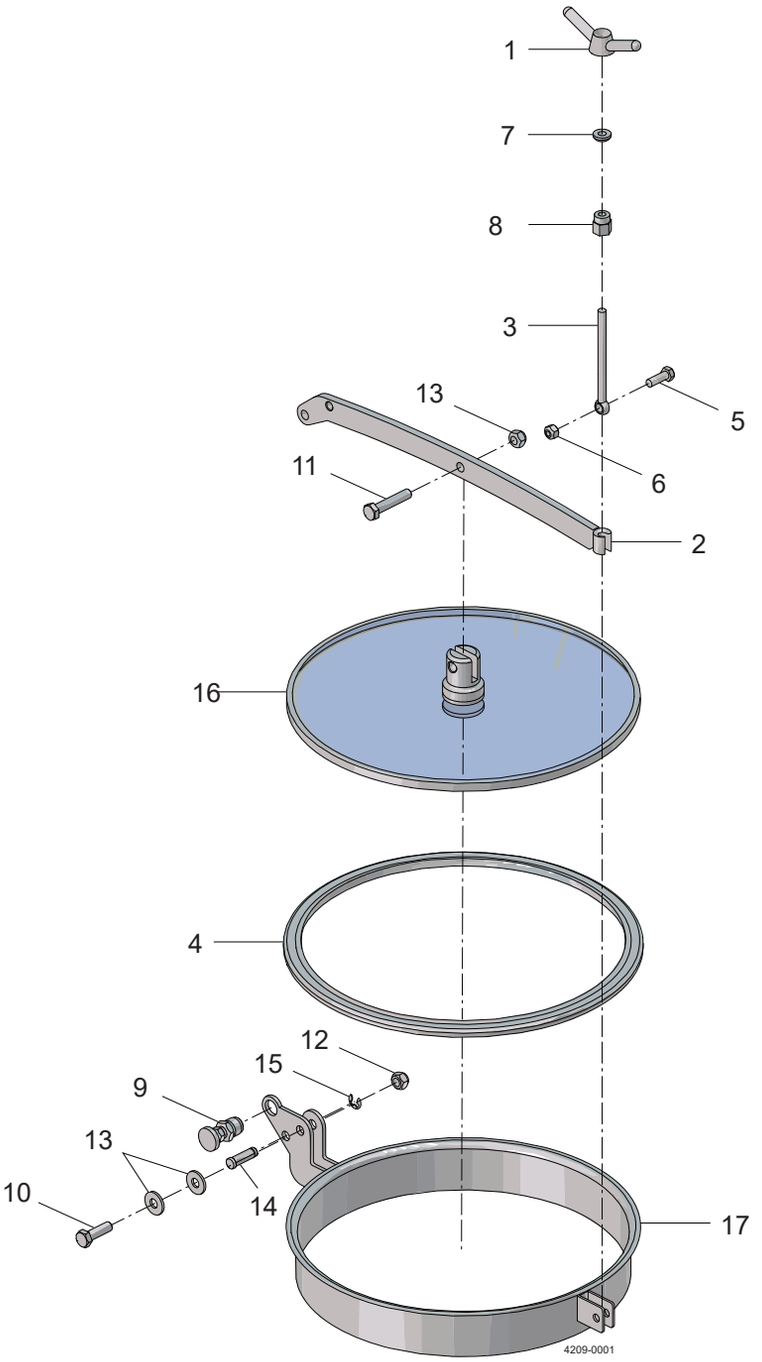

Pos	Qty	Denomination	Item no.
1	1	Handle	9612990787
2	1	Toggle	
3	1	Swing bolt	
4	1	Seal, NBR	9613437727
	1	Seal, EPDM	9613437726
	1	Seal, SILICONE (Q)	9613437729
	1	Seal, FPM	9613437728
5	1	Screw	9614200102
6	1	Nut	
7	1	Washer	9614210807
8	2	Nut	9614200103
9	1	Safety Pin	9614450905
10	1	Screw	
11	1	Screw	9614210411
12	1	Nut	9614210505
13	2	Washer	9614210810
14	1	Pin	9613437761
15	1	Retaining ring	9613437762
16	1	Cover, 1.4301 (304) or 1.4404 (316L)	
17	1	Frame, 1.4301 (304) or 1.4404 (316L)	

1.9

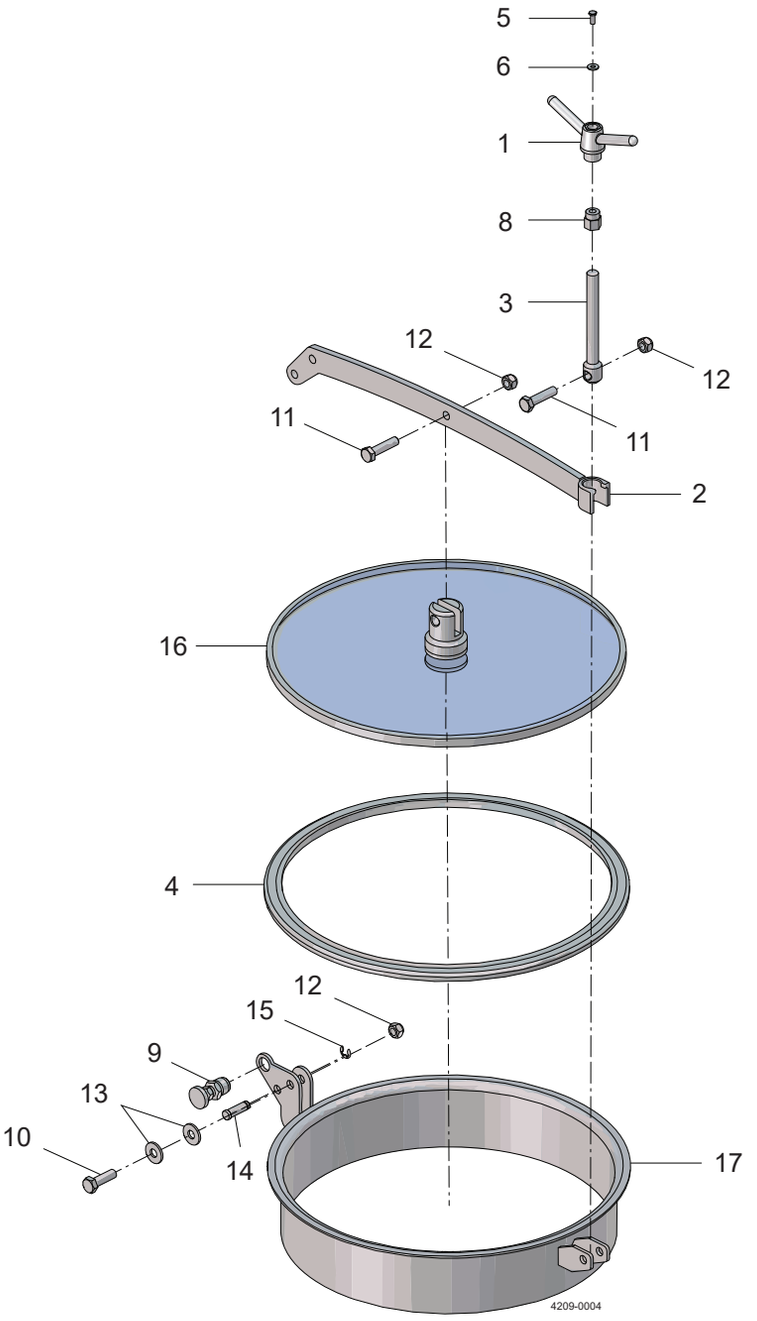

Pos	Qty	Denomination	Item no.
1	1	Handle	8010008194
2	1	Toggle	
3	1	Swing bolt	
4	1	Seal, NBR	9613437737
	1	Seal, EPDM	9613437736
	1	Seal, SILICONE (Q)	9613437739
	1	Seal, FPM	9613437738
5	1	Screw	
6	1	Washer	
7	1	Washer*	9611995390
8	2	Nut	
9	1	Safety Pin	9614450905
10	1	Screw	
11	2	Screw	9614210411
12	3	Nut	9614210504
13	2	Washer	9614210810
14	1	Pin	9613437761
15	1	Retaining ring	9613437762
16	1	Cover, 1.4301 (304) or 1.4404 (316L)	
17	1	Frame, 1.4301 (304) or 1.4404 (316L)	

* Only valid for handles available before April 2021

1.9

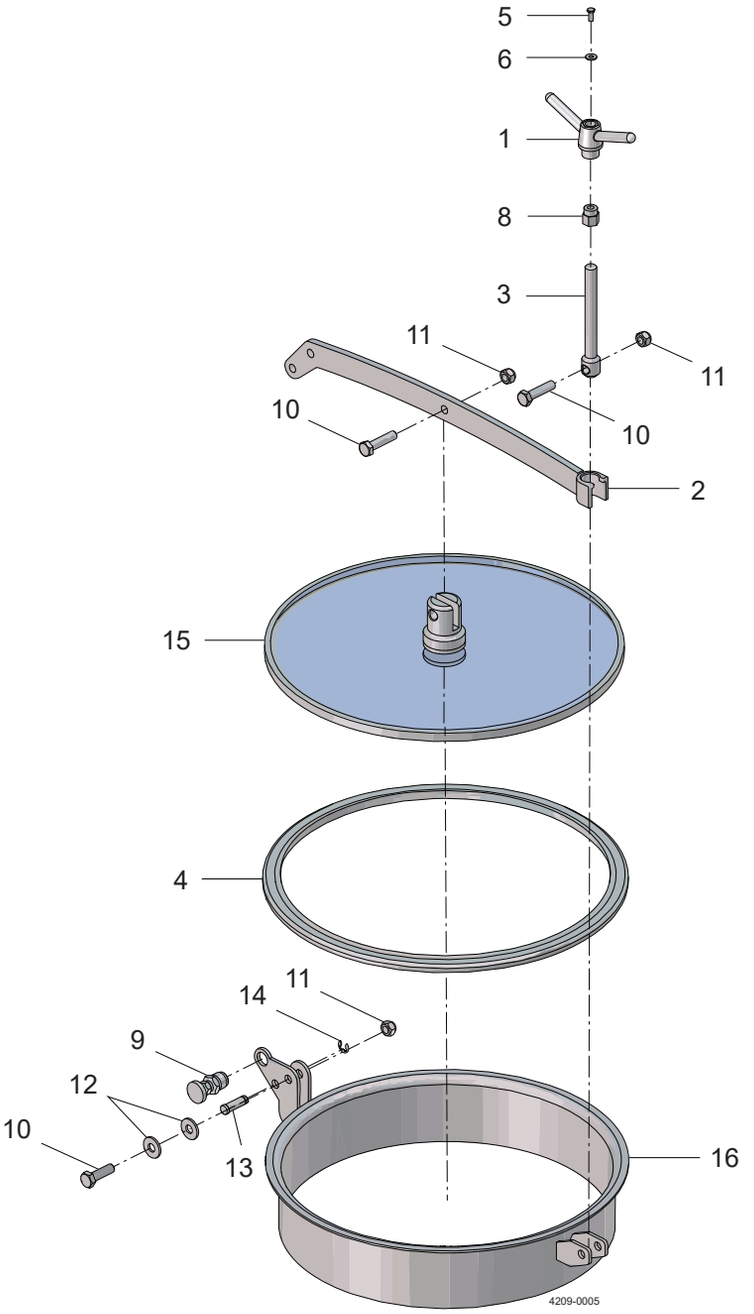

Pos	Qty	Denomination	Item no.
1	1	Handle	8010008194
2	1	Toggle	
3	1	Swing bolt	
4	1	Seal, NBR	9613437747
	1	Seal, EPDM	9613437746
	1	Seal, SILICONE (Q)	9613437749
	1	Seal, FPM	9613437748
5	1	Screw	
6	1	Washer	
7	1	Washer*	9611995390
8	2	Nut	
9	1	Safety Pin	9614450905
10	3	Screw	9614210411
11	3	Nut	9614210504
12	2	Washer	9614210810
13	1	Pin	9613437761
14	1	Retaining ring	9613437762
15	1	Cover, 1.4301 (304) or 1.4404 (316L)	
16	1	Frame, 1.4301 (304) or 1.4404 (316L)	

* Only valid for handles available before April 2021

1.9

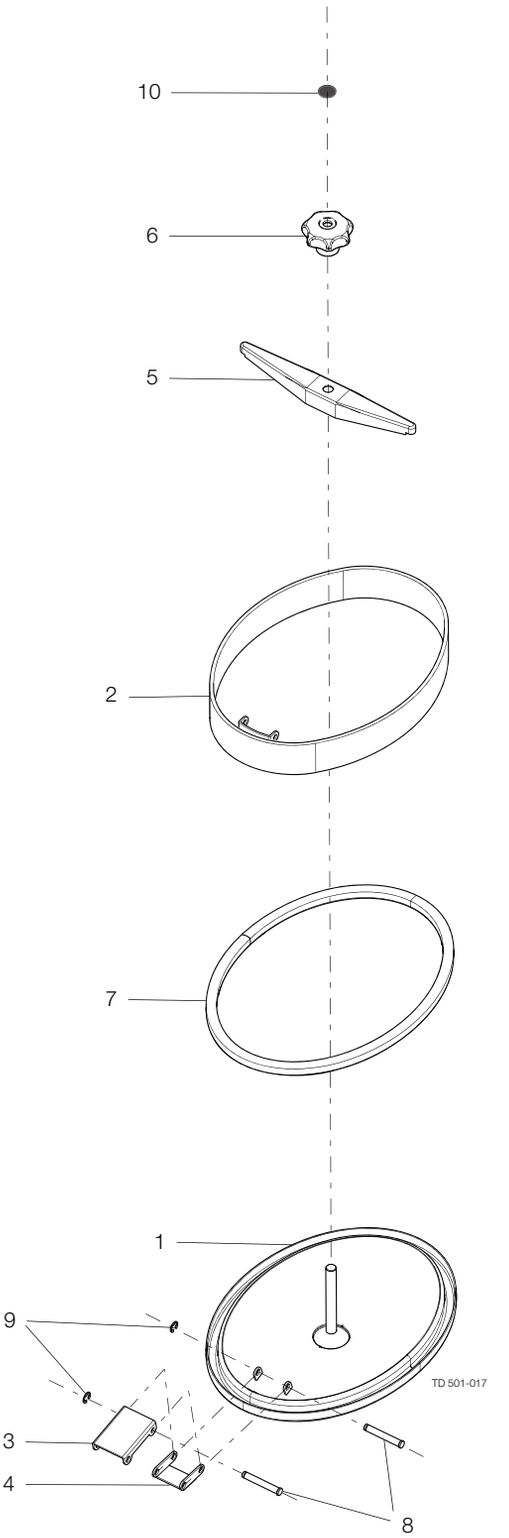

Pos	Qty	Denomination	1.4301 with hinge	1.4404 with hinge	1.4301 without hinge	1.4404 without hinge
1	1	Cover				
	1	Cover , 3A				
2	1	Frame , 60 mm				
	1	Frame , 60 mm 3A				
3	1	Big mounting	9613456809	9613456809		
4	1	Small mounting	9613456810	9613456810		
5	1	Toggle	9613456816	9613456816	9613456816	9613456816
6	1	Handle	9611700672	9611700672	9611700672	9611700672
7	1	Seal , EPDM	9613456812	9613456812	9613456812	9613456812
	1	Seal , NBR	9613456813	9613456813	9613456813	9613456813
	1	Seal, FPM	9613456814	9613456814	9613456814	9613456814
	1	Seal , Silicone (Q)	9613456815	9613456815	9613456815	9613456815
8	2	Pin	9613456819	9613456819		
9	2	Retaining ring	9613437762	9613437762		
10	1	Capsule	9611700644	9611700644	9611700644	9611700644
	1	Complete hinge system (pos. 3, 4, 8 and 9)	9613456820	9613456820		

Recommended spare parts: Pos. 7.

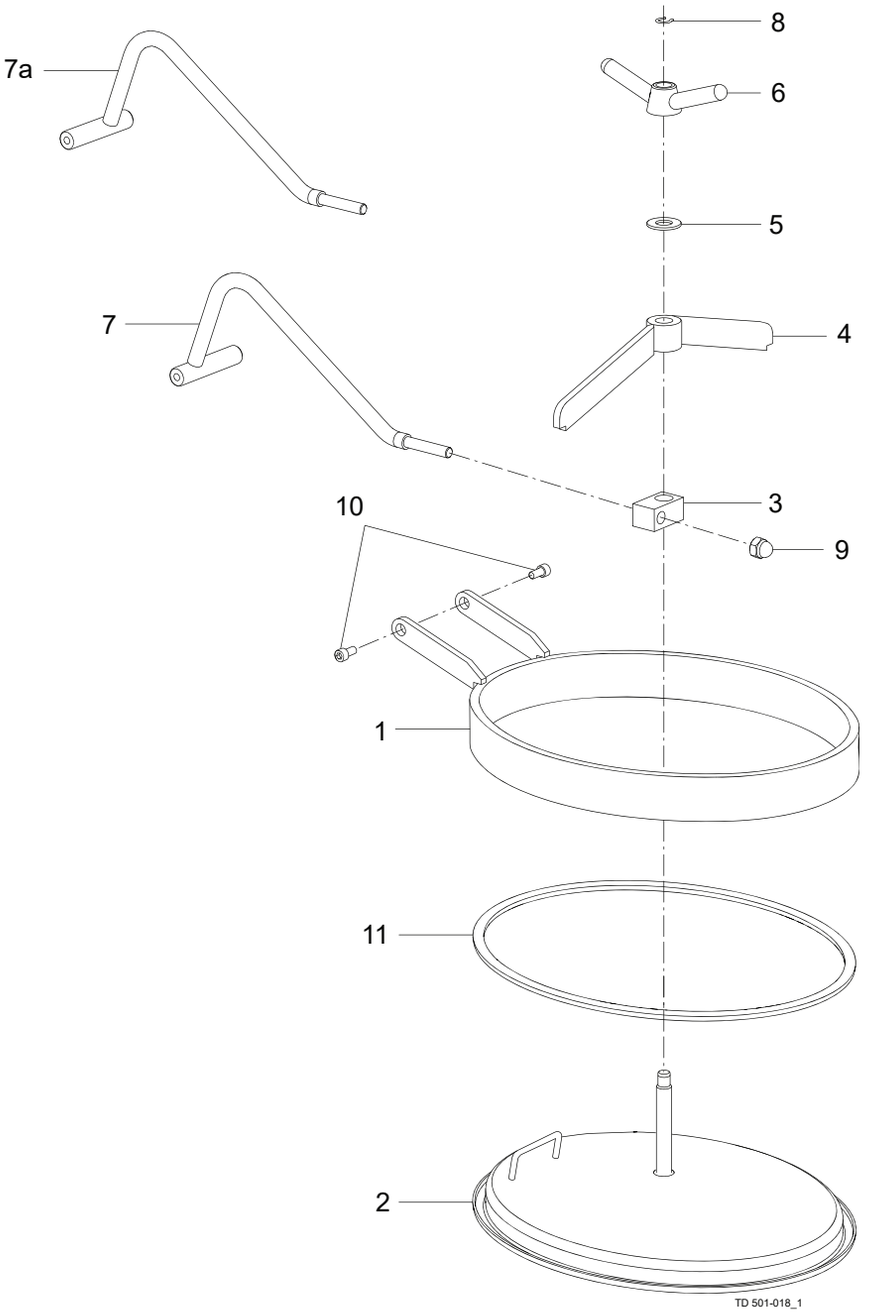
8
7a
6
5
7
4
3
10
9
1
11
2
TD 501-018_1

Pos	Qty	Denomination	1.4301	1.4404
1	1	Frame, 60 mm		
	1	Frame, 60 mm 3A		
	1	Frame, 100 mm		
	1	Frame, 100 mm 3A		
2	1	Cover		
	1	Cover, 3A		
3	1	Hub	9613456860	9613456860
4	1	* Toggle, 60 mm Frame	9614200115	9614200115
	1	** Toggle, 100 mm Frame	9613456842	9613456842
5	1	Trust collar	9613456863	9613456863
6	1	Handle	9612990783	9612990783
7	1	Suspension arm, left	9613456840	9613456840
7a	1	Suspension arm, right	9613456841	9613456841
8	1	Retaining Ring	9613456862	9613456862
9	1	Nut	9613456865	9613456865
10	2	Screw	9613456861	9613456861
11	1	Seal , EPDM	9613456836	9613456836
	1	Seal , NBR	9613456837	9613456837
	1	Seal , FPM	9613456838	9613456838
	1	Seal , Silicone (Q)	9613456839	9613456839

Recommended spare parts: Pos. 10.

* For:

a) 60 mm. New Version Manhole Cover Toggle 2015-

b) 60 mm. Old Version Manhole Cover -2015

c) 100 mm. New Version Toggle (Higher spindle = 178 mm) 2015-.

** For: 100 mm. Old Version Toggle (Spindle = 143 mm high) -2015.

(TD900....)

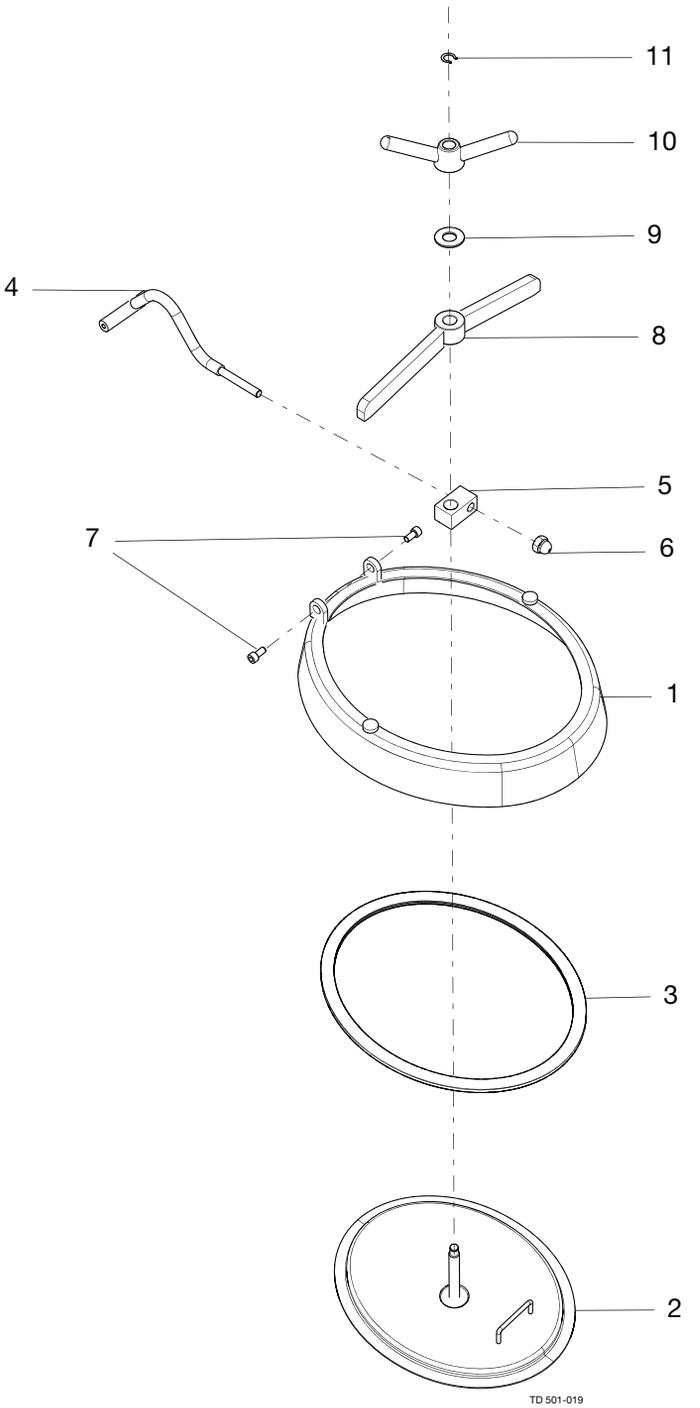
11
10
9
4
8
5
7
6
1
3
2
TD 501-019

Pos	Qty	Denomination	1.4301	1.4404
1	1	Frame 76 mm		
2	1	Cover		
3	1	Seal, EPDM	9613456854	9613456854
	1	Seal , NBR	9613456855	9613456855
	1	Seal , FPM	9613456856	9613456856
	1	Seal , Q	9613456857	9613456857
4	1	Suspension arm	9613456858	9613456858
5	1	Hub	9613456860	9613456860
6	1	Nut	9613456861	9613456861
7	2	Screw	9613456865	9613456865
8	1	Toggle	9613456859	9613456859
9	1	Thrust plate	9613456863	9613456863
10	1	Top Nut	9612990783	9612990783
11	1	Retaining Ring	9613456862	9613456862

Recommended spare parts: Pos. 3.

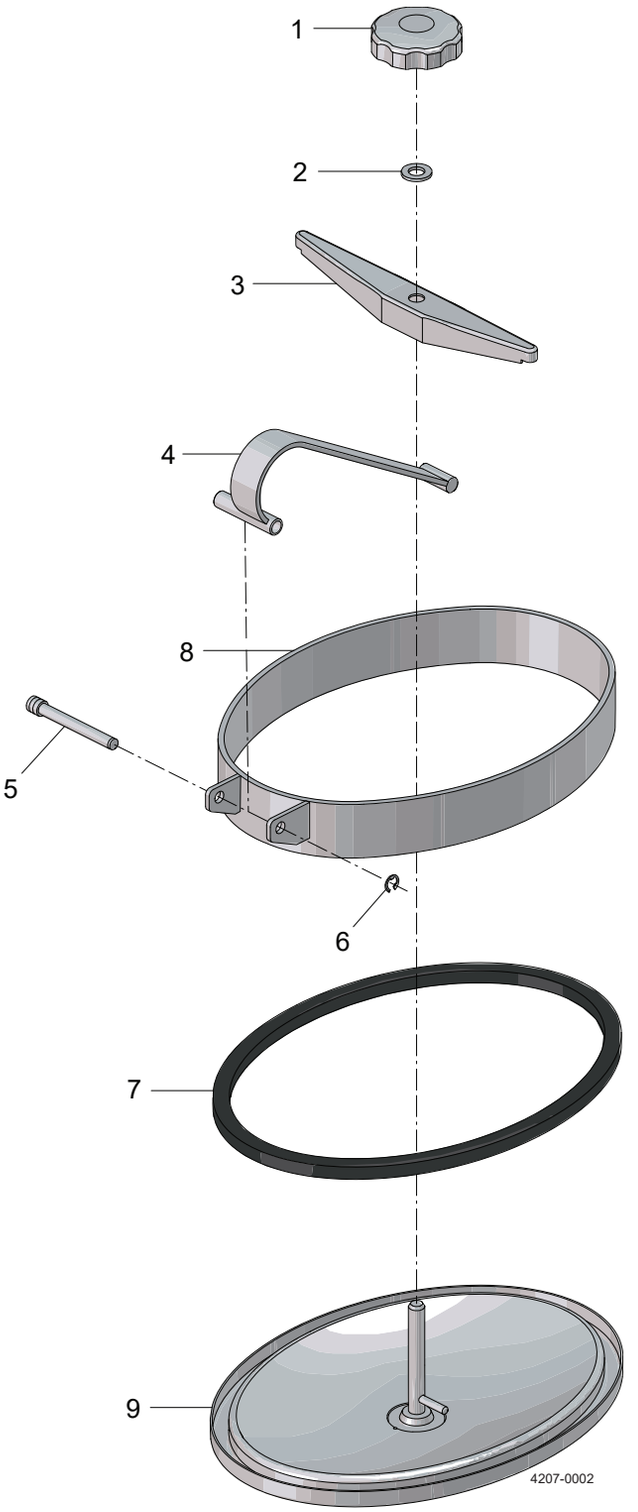
1
2
3
4
8
5
6
7
9
4207-0002

Pos	Qty	Denomination	1.4301 (304)	1.4404 (316L)
Oval Manhole Cover O-440x320IO (Previously O-320x440IO)				
1	1	Handle	9614210314	9614210314
2	1	Washer	9614210803	9614210803
3	1	Toggle	9613456816	9613456816
4	1	Suspension arm	9614209322	9614209322
5	1	Pin	9614210207	9614210207
6	1	Retaining ring	9613437762	9613437762
7	1	Seal - EPDM	9613456812	9613456812
	1	Seal - NBR	9613456813	9613456813
	1	Seal - FPM	9613456814	9613456814
	1	Seal - Silicone (Q)	9613456815	9613456815
8	1	Frame, 60mm x 6mm		
	1	Frame, 60mm x 8mm		
	1	Frame, 80mm x 6mm		
	1	Frame, 80mm x 8mm		
9	1	Cover, 1.5mm		
	1	Cover, 2.0mm		

Recommended spare parts: Pos. 7.

TD 4207-0002

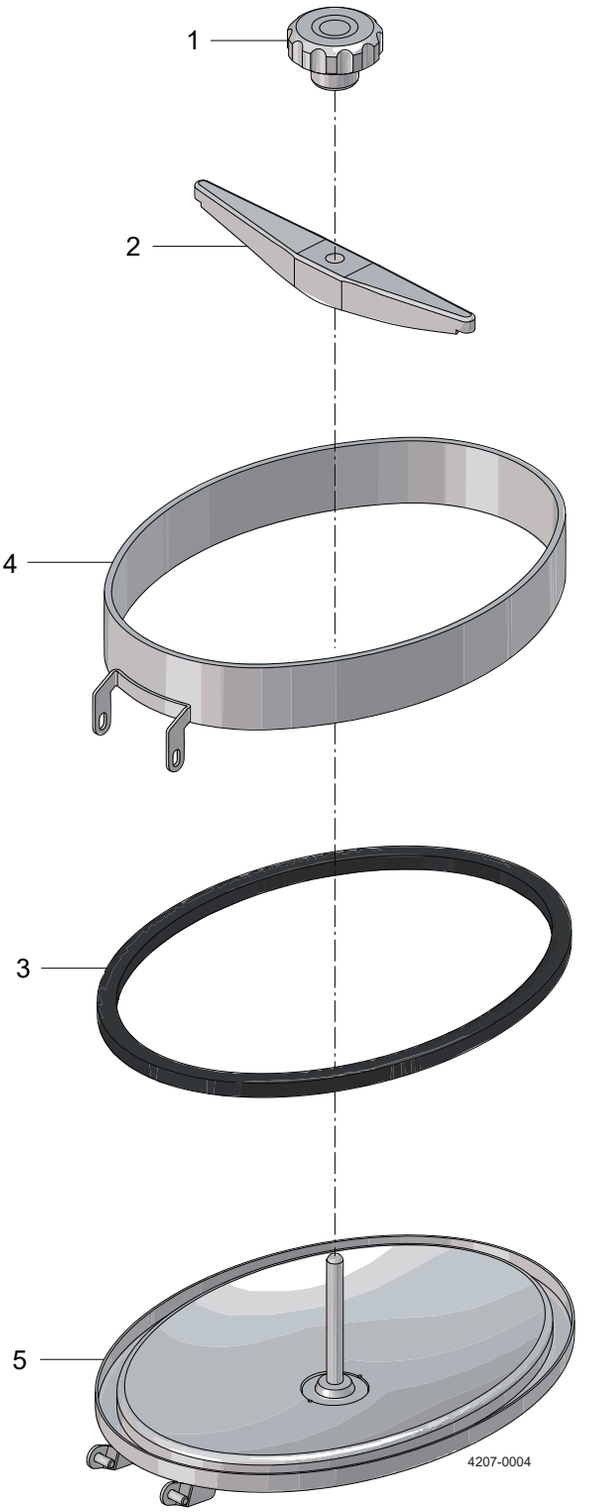
1
2
4
3
5
4207-0004

Pos	Qty	Denomination	1.4301 (304)	1.4404 (316L)
Oval Manhole Cover O-440x320IOIH (Previously O-440x320IO)				
1	1	Handle	9612990795	9612990795
	1	Handle Stainless	9614210313	9614210313
2	1	Toggle	9613456816	9613456816
3	1	Seal - EPDM	9613456812	9613456812
	1	Seal - NBR	9613456813	9613456813
	1	Seal - FPM	9613456814	9613456814
	1	Seal - Silicone (Q)	9613456815	9613456815
4	1	Frame, 60mm x 6mm		
	1	Frame, 60mm x 8mm		
	1	Frame, 80mm x 6mm		
	1	Frame, 80mm x 8mm		
5	1	Cover, 1.5mm		
	1	Cover, 2.0mm		

Recommended spare parts: Pos. 3.

TD 4207-0004

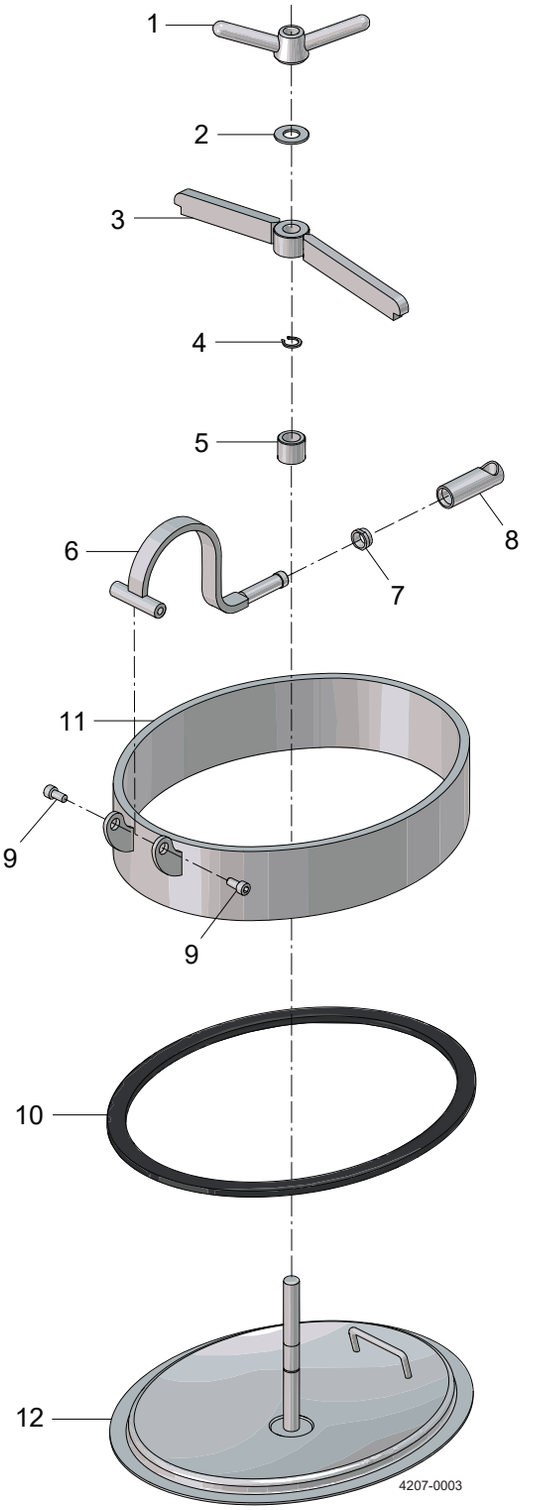
1
2
3
4
5
6
7
8
11
9
9
10
12
4207-0003

Pos	Qty	Denomination	1.4301 (304)	1.4404 (316L)
Oval Manhole Cover O-490x395OI (Previously O-395x495IO)				
1	1	Handle	9612990783	9612990783
2	1	Thrust plate	9613456863	9613456863
3	1	Toggle	9614209404	9614209404
4	1	Reataining ring	9614210703	9614210703
5	1	Bushing Teflon	9614210902	9614210902
6	1	Suspension arm	9614209310	9614209310
7	1	Ring for pivot joint	9614210901	9614210901
8	2	Pivot joint	9614211101	9614211101
9	2	Screw	9613456861	9613456861
10	1	Seal - EPDM	9613456854	9613456854
	1	Seal - NBR	9613456855	9613456855
	2	Seal - FPM	9613456856	9613456856
	1	Seal - Silicone (Q)	9613456857	9613456857
11	1	Frame		
12	1	Cover		

Recommended spare parts: Pos. 10

TD 4207-0003

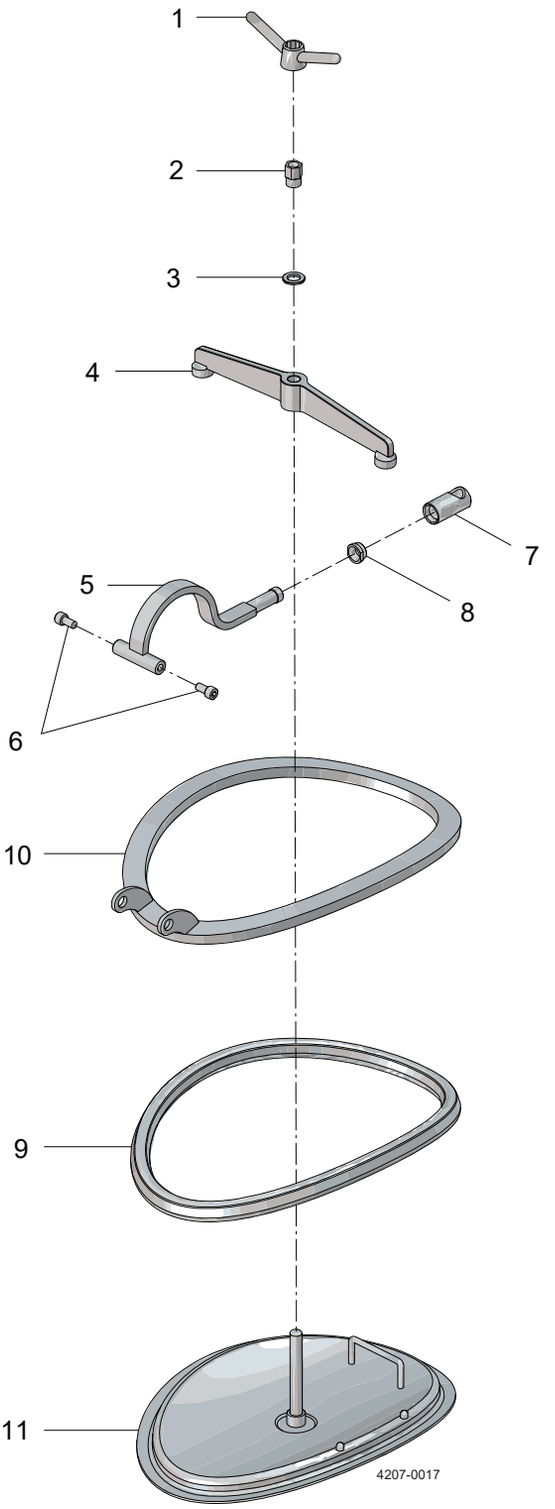
1
2
3
4
5
6
7
8
10
9
11
4207-0017

Pos	Qty	Denomination	1.4301 (304)	1.4404 (316L)
1	1	Handle	9614458405	9614458405
2	1	Bushing for handle	9614200116	9614200116
3	1	Washer	9614210803	9614210803
4	1	Toggle	9614200117	9614200117
5	1	Suspension arm	9614200118	9614200118
6	2	Screw	9613456861	9613456861
7	1	Pivot	9614200119	9614200119
8	1	Ring for Pivot joint	9614210901	9614210901
9	1	Seal - EPDM	9613407213	9613407213
	1	Seal - NBR	9613407215	9613407215
	1	Seal - FPM	9613407217	9613407217
	1	Seal - Silicone (Q)	9613407216	9613407216
10	1	Frame		
11	1	Cover		

Recommended spare parts: Pos. 9.

TD 4207-0017

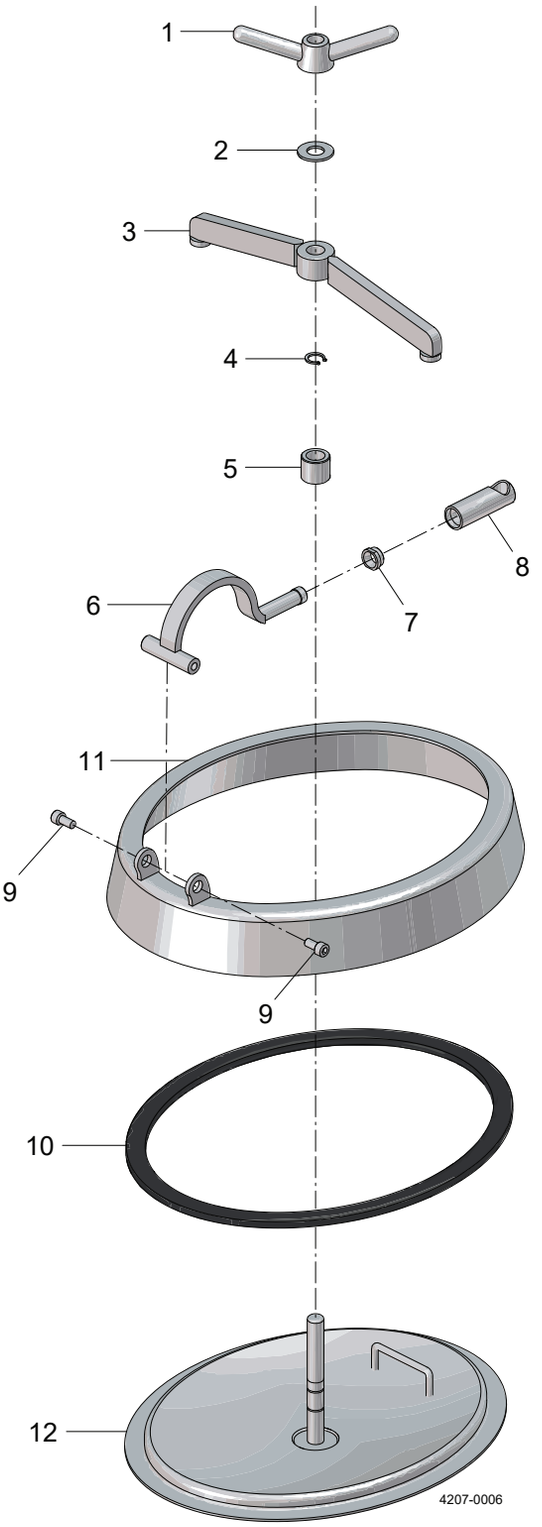
1
2
3
4
5
6
7
8
9
9
10
11
12
4207-0006

Pos	Qty	Denomination	1.4301 (304)	1.4404 (316L)
Oval Manhole Cover O-542x446IO (Previously O-445x550IO)				
1	1	Handle	9612990783	9612990783
2	1	Thrust plate	9613456863	9613456863
3	1	Arm	9614209406	9614209406
4	1	Reataining ring	9614210703	9614210703
5	1	Bushing Teflon	9614210902	9614210902
6	1	Suspension arm	9614209312	9614209312
7	1	Ring for pivot joint	9614210901	9614210901
8	1	Pivot joint	9614211101	9614211101
9	2	Screw	9613456861	9613456861
10	1	Seal - EPDM	9613456854	9613456854
	1	Seal - NBR	9613456855	9613456855
	1	Seal - FPM	9613456856	9613456856
	1	Seal - Silicone (Q)	9613456857	9613456857
11	1	Frame		
12	1	Cover		

Recommended spare parts: Pos. 10

TD 4207-0006

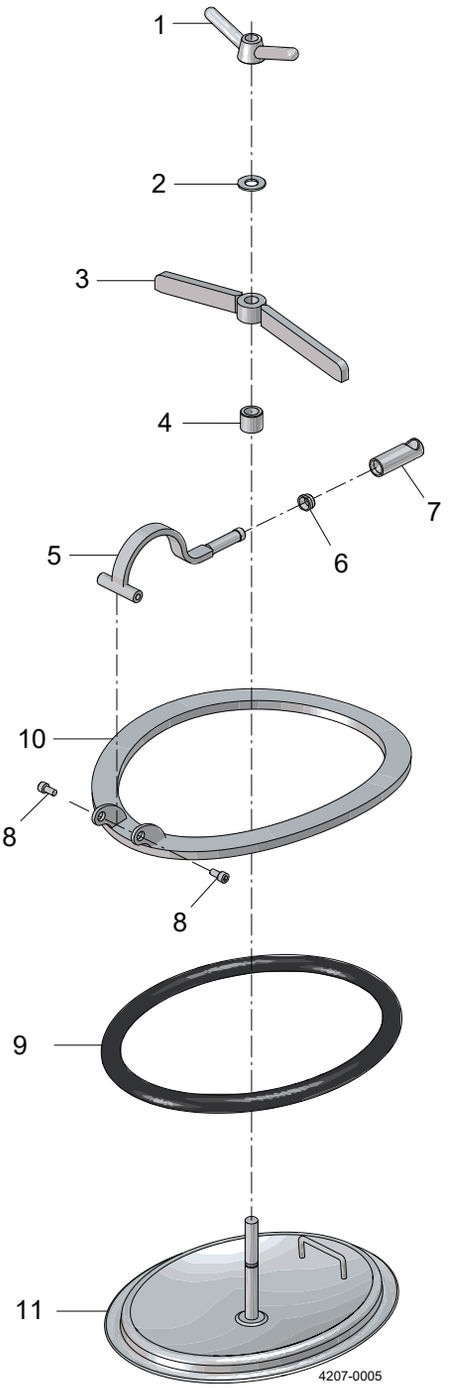
1
2
3
4
5
6
7
10
8
8
9
11
4207-0005

Pos	Qty	Denomination	1.4301 (304)	1.4404 (316L)
Oval Manhole Cover O-544x440lO (Previously O-440x540lO)				
1	1	Handle	9612990783	9612990783
2	1	Thrust plate	9613456863	9613456863
3	1	Toggle	9614209402	9614209402
4	1	Bushing Teflon	9614210902	9614210902
5	1	Suspension arm	9614209308	9614209308
6	1	Ring for pivot joint	9614210901	9614210901
7	1	Pivot joint	9614211101	9614211101
8	2	Screw	9613456861	9613456861
9	1	Seal - EPDM	9612945015	9612945015
	1	Seal - NBR	9614211301	9614211301
	1	Seal - FPM	9614211302	9614211302
	1	Seal - Silicone (Q)	9612990717	9612990717
10	1	Frame		
11	1	Cover		

Recommended spare parts: Pos. 9

TD 4207-0005

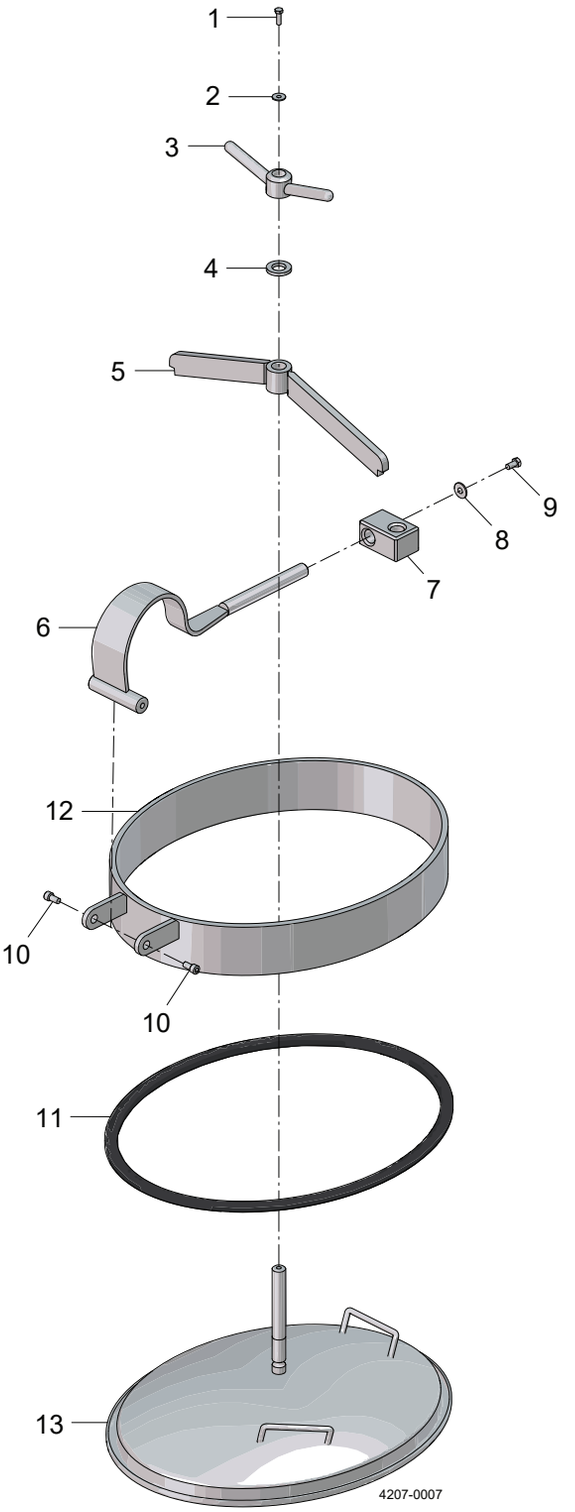
1
2
3
4
5
9
8
7
6
12
10
10
11
13
4207-0007

Pos	Qty	Denomination	1.4301 (304)	1.4404 (316L)
Oval Manhole Cover O-658x532IO (Previously O-531x655IO)				
1	1	Screw	9614210401	9614210401
2	1	Washer	9614210801	9614210801
3	1	Handle	9614200104	9614200104
4	1	Washer	9614200105	9614200105
5	1	Toggle	9614200106	9614200106
6	1	Swing Arm	9614200107	9614200107
7	1	Pivot	9614200108	9614200108
8	1	Washer	9614200109	9614200109
9	1	Screw	9614210403	9614210403
10	2	Screw	9613456861	9613456861
11	1	Seal EPDM	9614332401	9614332401
	1	Seal NBR	9614332402	9614332402
	1	Seal FPM	9614332403	9614332403
	1	Seal SILICONE (Q)	9614332404	9614332404
12	1	Frame		
13	1	Cover		

Recommended spare parts: Pos. 11

TD 4207-0007

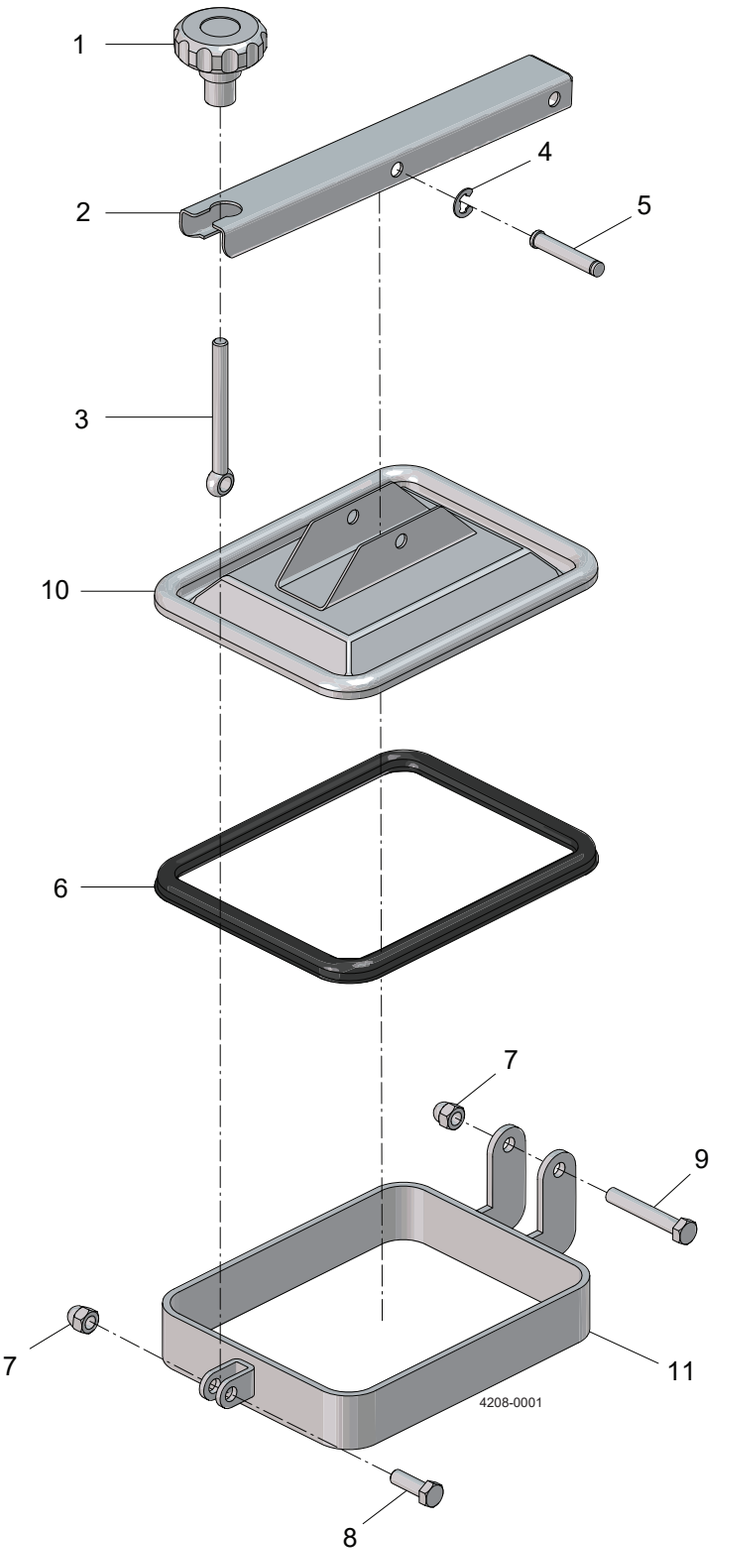
1
2
4
5
3
10
6
7
9
7
11
8
4208-0001

Pos	Qty	Denomination	1.4301 (304)	1.4404 (316L)
Rectangular Manhole Cover R-235x185 (Previously R-184x234)				
1	1	V-Handle SS	9614458404	9614458404
	1	Round handle plastic	9612990794	9612990794
2	1	Toggle	9614209301	9614209301
3	1	Swing bolt	9614200101	9614200101
4	1	Retaining ring	9614210701	9614210701
5	1	Pin	9614210202	9614210202
6	1	Seal - EPDM	9612945005	9612945005
	1	Seal - NBR	9612945007	9612945007
	1	Seal - FPM	9612990719	9612990719
	1	Seal - Silicone (Q)	9612990718	9612990718
7	2	Nut	9614210506	9614210506
8	1	Screw	9614210405	9614210405
9	1	Screw	9614210413	9614210413
10	1	Cover	9614212001	9614212002
11	1	Frame	9614215101	9614215102

Recommended spare parts: Pos. 6.

TD 4208-0001

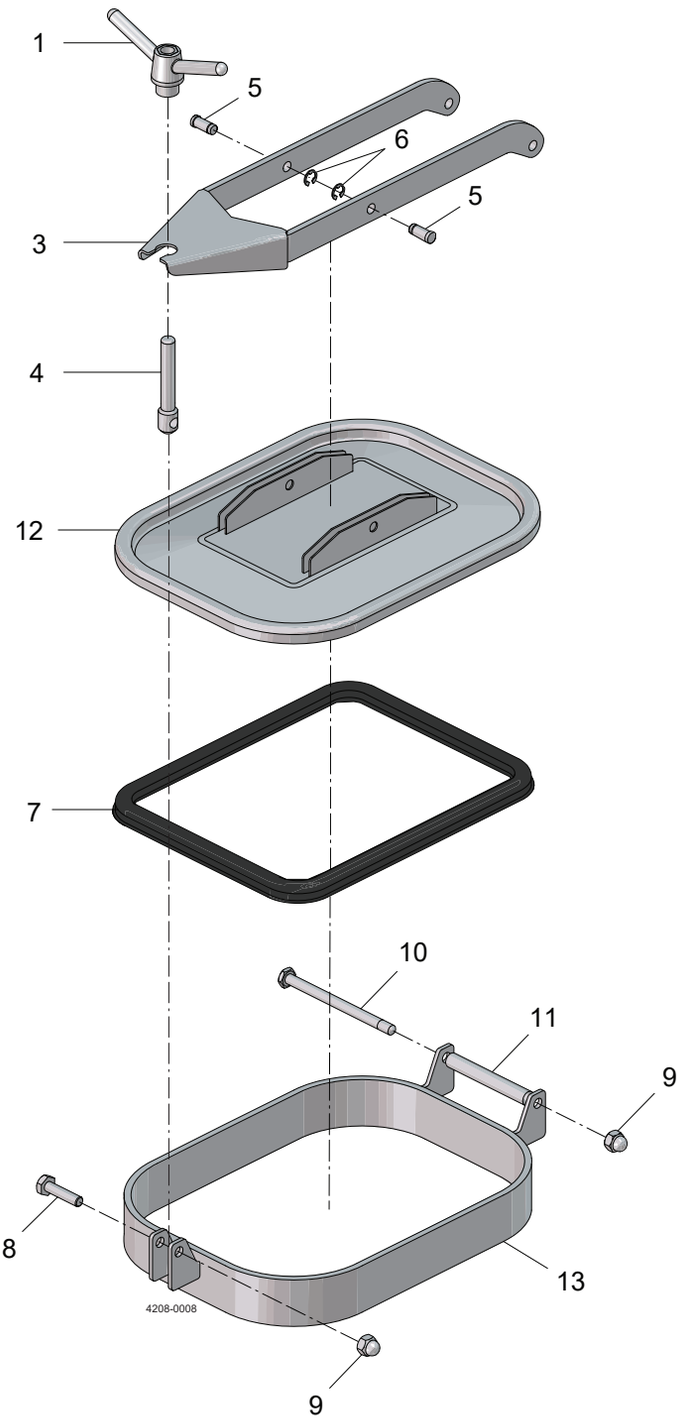
1
5
6
5
3
4
12
7
10
11
9
8
13
4208-0008
9

Pos	Qty	Denomination	1.4301 (304)	1.4404 (316L)
Rectangular Manhole Cover R-440x332				
1	1	Handle	8010008194	8010008194
2	1	Washer*	9611995390	9611995390
3	1	Toggle	9614209302	9614209302
4	1	Swing bolt	9614210008	9614210008
5	2	Pin	9614210205	9614210205
6	2	Retaining ring	9613437762	9613437762
7	1	Seal - EPDM	9612945071	9612945071
	1	Seal - NBR	9612945073	9612945073
	1	Seal - FPM	9612990768	9612990768
	1	Seal - Silicone (Q)	9612990767	9612990767
8	1	Screw	9614210411	9614210411
9	2	Nut	9614210505	9614210505
10	2	Screw	9614210101	9614210101
11	1	Distance tube	9614211001	9614211001
12	1	Cover		
13	1	Frame 60mm		
14	1	Frame 100mm		

* Only valid for handles available before April 2021

Recommended spare parts: Pos. 7.

TD 4208-0004

1.9

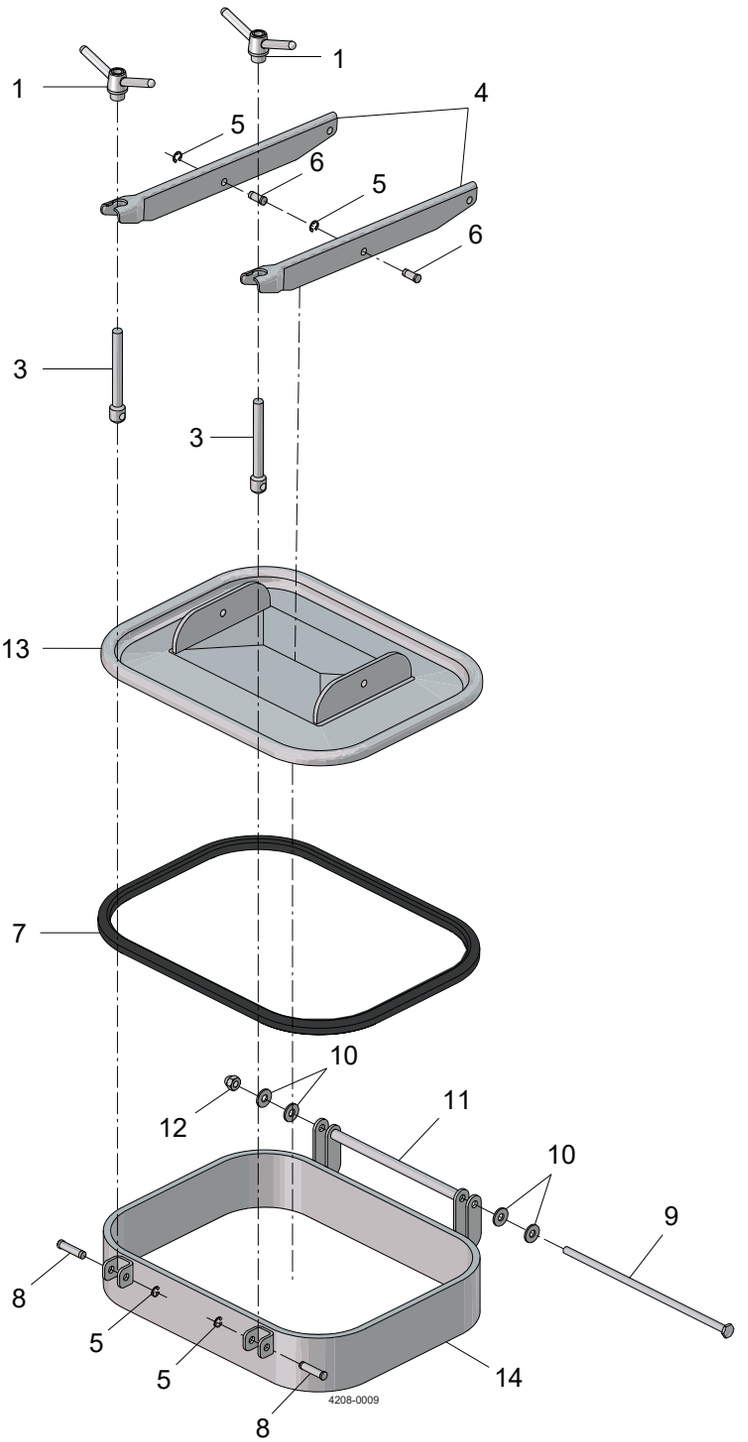

Pos	Qty	Denomination	1.4301 (304)	1.4404 (316L)
Rectangular Manhole Cover R-432x555 (Previously R-555x432)				
1	2	Handle	8010008194	8010008194
2	2	Washer*	9611995390	9611995390
3	2	Swing bolt	9614210009	9614210009
4	2	Toggle	9614209306	9614209306
5	4	Retaining ring	9613437762	9613437762
6	2	Pin	9614210205	9614210205
7	2	Seal - EPDM, from 04-2010	9612990857	9612990857
8	2	Pin	9614210206	9614210206
9	2	Spindle	9614210103	9614210103
10	1	Washer	9614210810	9614210810
11	4	Distance tube	9614211003	9614211003
12	1	Nut	9614200124	9614200124
13	1	Cover		
14	1	Frame, 60mm		
	1	Frame, 60mm		

* Only valid for handles available before April 2021

Recommended spare parts: Pos. 7.

TD 4208-0005

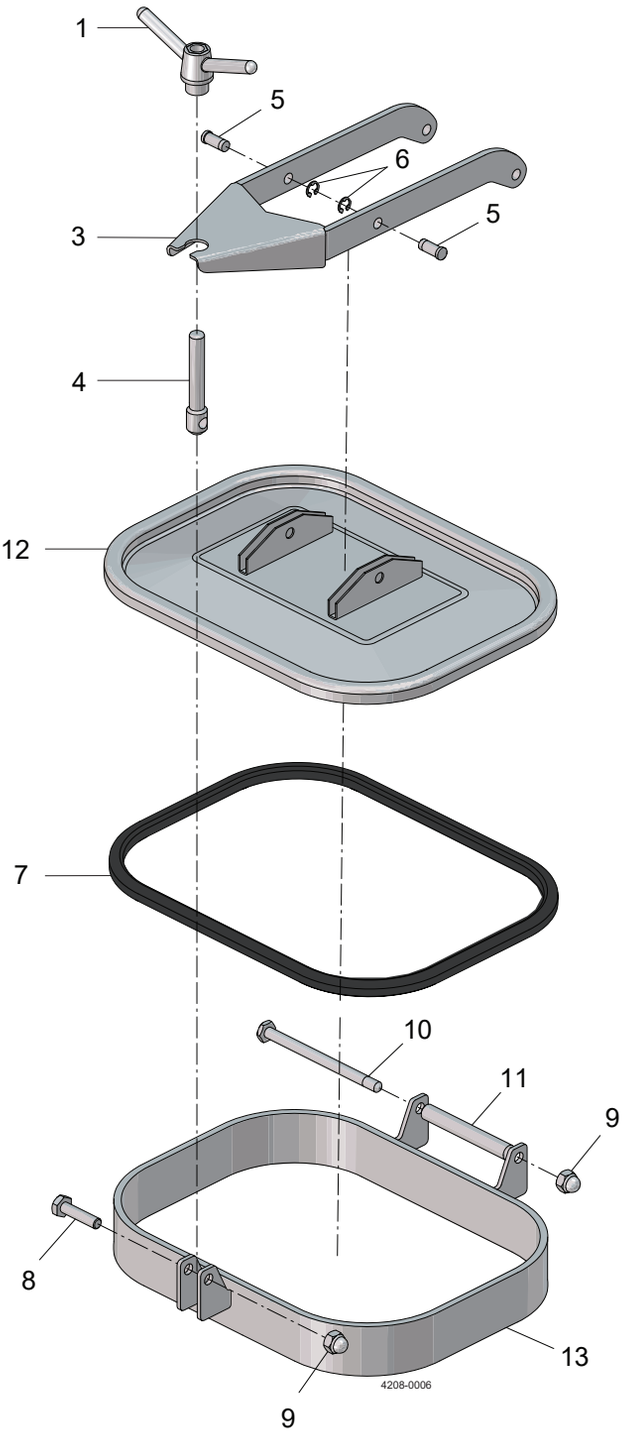
1
5
6
5
3
4
12
7
10
11
9
8
13
9
4208-0006

Pos	Qty	Denomination	1.4301 (304)	1.4404 (316L)
Rectangular Manhole Cover R-332x440				
1	1	Handle	8010008194	8010008194
2	1	Washer*	9611995390	9611995390
3	1	Toggle	9614209304	9614209304
4	1	Swing bolt	9614210008	9614210008
5	2	Pin	9614210205	9614210205
6	2	Retaining ring	9613437762	9613437762
7	1	Seal - EPDM	9612945071	9612945071
	1	Seal - NBR	9612945073	9612945073
	1	Seal - FPM	9612990768	9612990768
	1	Seal - Silicone (Q)	9612990767	9612990767
8	1	Screw	9614210411	9614210411
9	2	Nut	9614210505	9614210505
10	1	Screw	9614210101	9614210101
11	1	Distance tube	9614211001	9614211001
12	1	Cover		
13	1	Frame 60mm		
	1	Frame 100mm		

* Only valid for handles available before April 2021

Recommended Spare Parts: Pos. 7

TD 4208-0002

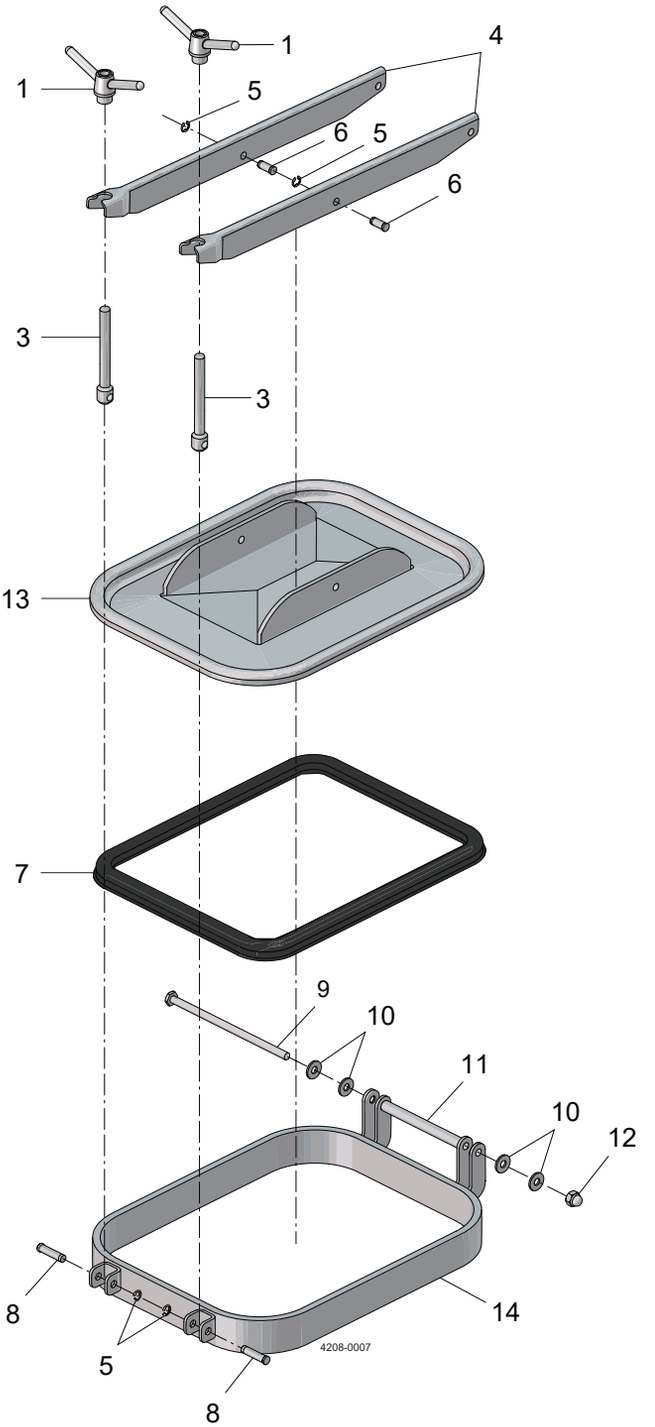
1
1
4
5
6
5
6
3
3
13
7
9
10
11
10
12
8
14
5
8
4208-0007

Pos	Qty	Denomination	1.4301 (304)	1.4404 (316L)
Rectangular Manhole Cover R-555x432 (Previously R-432x555)				
1	2	Handle	8010008194	8010008194
2	2	Washer*	9611995390	9611995390
3	2	Swing bolt	9614210009	9614210009
4	2	Toggle	9614209307	9614209307
5	3	Retaining ring	9613437762	9613437762
6	2	Pin	9614210205	9614210205
7	1	Seal - EPDM, from 04-2010	9612990857	9612990857
	1	Seal - NBR, from 04-2010	9612990856	9612990856
	1	Seal - FPM, from 04-2010	9612990860	9612990860
	1	Seal - Silicone (Q), from 04-2010	9612990859	9612990859
	1	Seal - EPDM, until 04-2010	9612945008	9612945008
	1	Seal - NBR, until 04-2010	9612945010	9612945010
	1	Seal - FPM, until 04-2010	9612990705	9612990705
	1	Seal - Silicone (Q), until 04-2010	9612990704	9612990704
8	2	Pin	9614210206	9614210206
9	2	Screw	9614210102	9614210102
10	1	Washer	9614210810	9614210810
11	4	Distance tube	9614211002	9614211002
12	1	Nut	9614200124	9614200124
	1	Frame, 60mm, T1=12mm		
	1	Frame, 100mm, T1=8mm		
	1	Frame, 100mm, T1=12mm		

* Only valid for handles available before April 2021

Recommended spare parts: Pos. 7.

TD 4208-0003

Not manufactured anymore

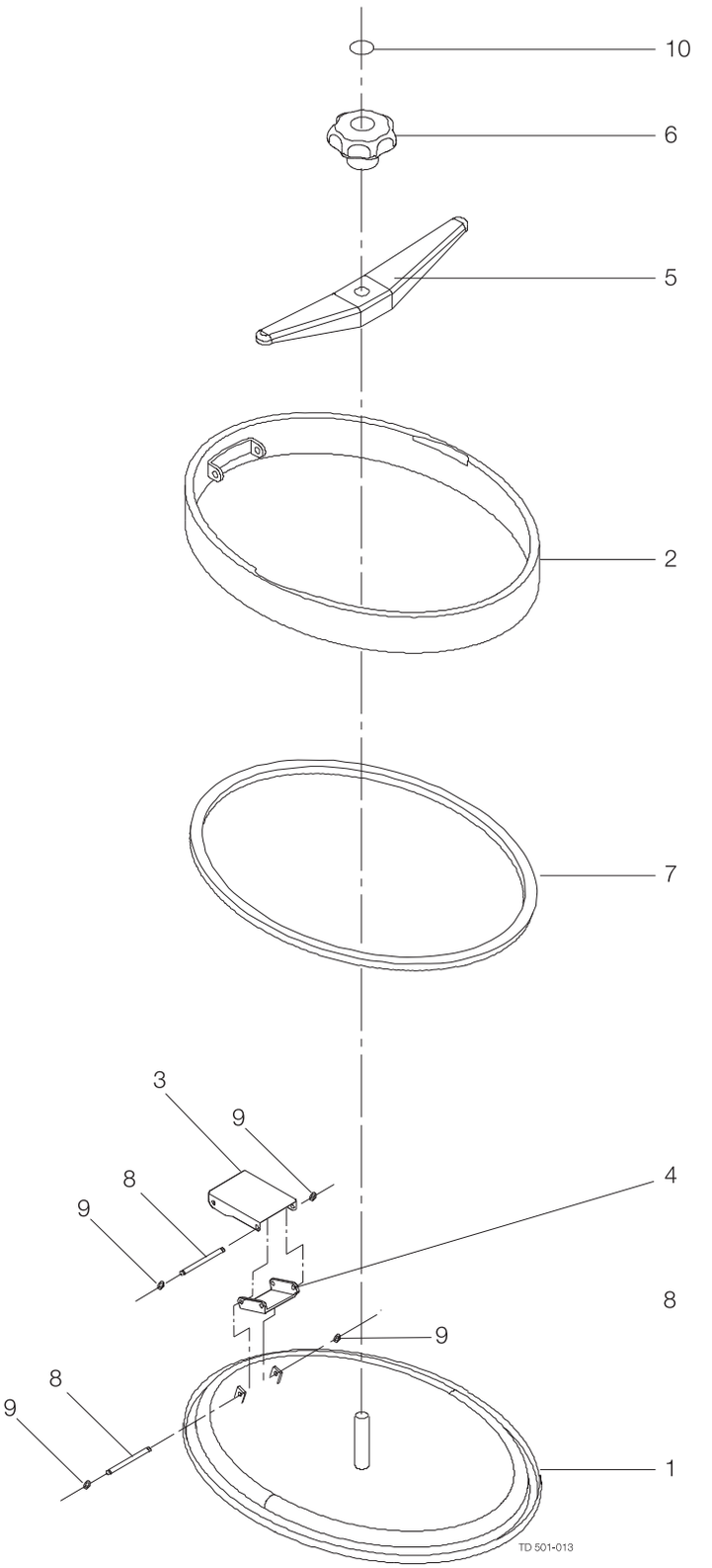

Pos	Qty	Denomination	1.4301	1.4404
1	1	Cover		
2	1	Frame		
3	1	Big mounting		
4	1	Small mounting		
5	1	Toggle		
6	1	Handle, blue (Period 9907-)	9611700672	9611700672
	1	Handle, green (Period -9907)		
7	1	Seal, - NBR, black (Std.)	9611700510	9611700510
	1	Seal, - Silicone (Q)	9611700511	9611700511
	1	Seal, - EPDM	9611700512	9611700512
	1	Seal, - NBR, white	9611700513	9611700513
8	2	Pin		
9	4	O-ring	22340302	22340302
10	1	Capsule, blue (Period 9907-)	9611700644	9611700644

Recommended spare parts: Pos. 7.

TD 900-223

Not manufactured anymore

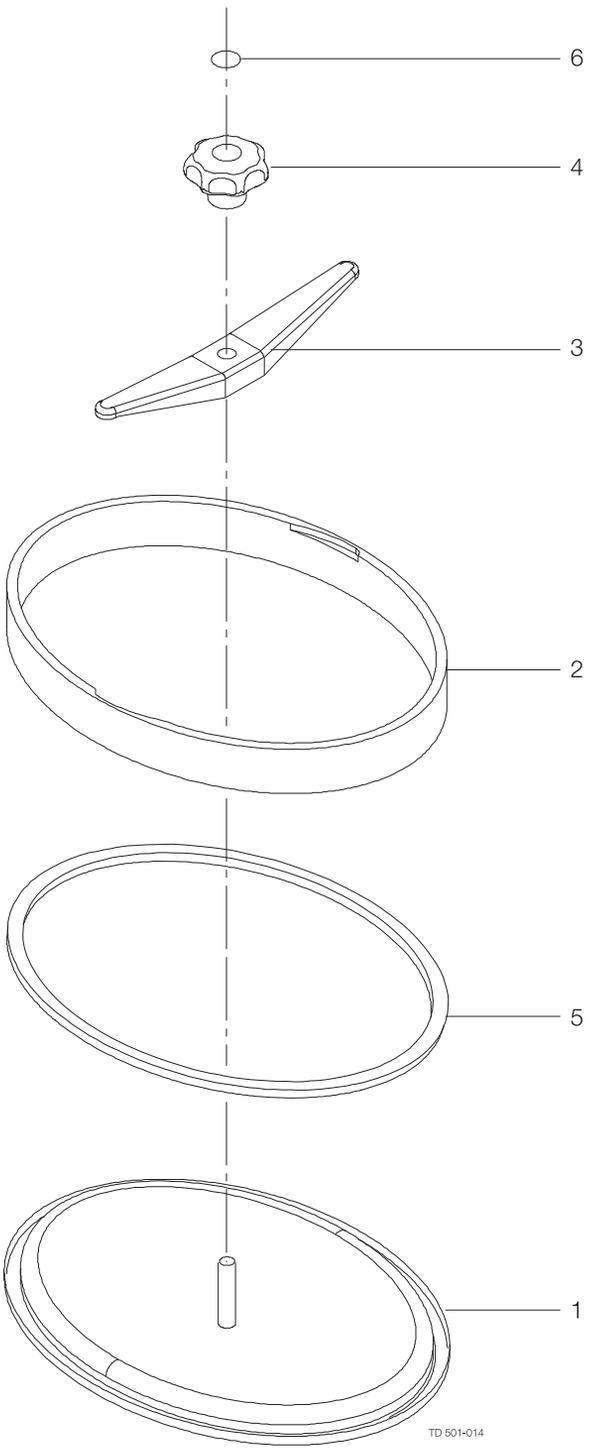

Pos	Qty	Denomination	1.4301	1.4404
1	1	Cover		
2	1	Frame		
3	1	Toggle		
4	1	Handle, blue (Period 9907-)	9611700672	9611700672
	1	Handle, green (Period -9907)		
5	1	Seal, - NBR, black (Std.)	9611700510	9611700510
	1	Seal, - Silicone (Q)	9611700511	9611700511
	1	Seal, - EPDM	9611700512	9611700512
	1	Seal, - NBR, white	9611700513	9611700513
6	1	Capsule, blue (Period 9907-)	9611700644	9611700644
	1	Capsule, green (Period -9907)		

Recommended spare parts: Pos. 5.

TD 900-224

Not manufactured anymore

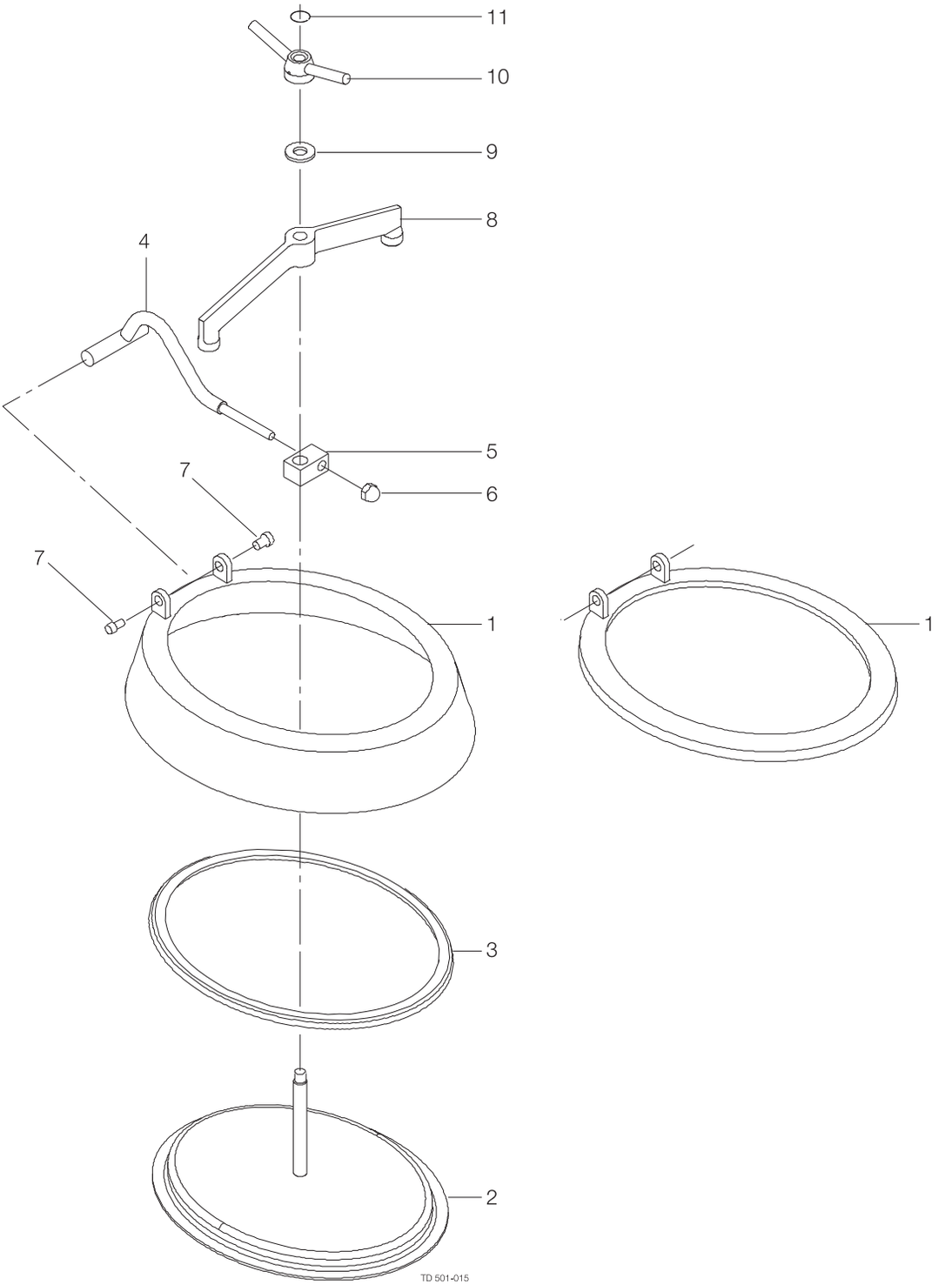

Pos	Qty	Denomination	1.4301 *	1.4571 *	1.4301 **	1.4571 **
1	1	Frame, 70x3				
	1	Frame, 70x4				
	1	Frame, 100x3				
	1	Frame, 100x4				
	1	Frame, 140x3				
	1	Frame, 140x4				
	1	Frame, 10x30				
	1	Frame, 12x30				
2	1	Cover 4 mm, (Period 9907-)				
	1	Cover 4 mm, (Period -9907)				
3	1	Seal, NBR (Standard)	9612171004	9612171004	9612171004	9612171004
	1	Seal, EPDM	9612171003	9612171003	9612171003	9612171003
	1	Seal, FPM	9612171002	9612171002	9612171002	9612171002
	1	Seal, Q	9612171001	9612171001	9612171001	9612171001
4	1	Suspension arm				
5	1	Hub, (Period 9907-)	9612607601	9612607601	9612607601	9612607601
	1	Hub, (Period -9907)				
6	1	Nut	9611991761	9611991761	9611991761	9611991761
7	2	Screw	9611991760	9611991760	9611991760	9611991760
8	1	Toggle, (Period 9907-)				
	1	Toggle, (Period -9907)				
9	1	Thrust plate, (Period 9907-)	9612607501	9612607501	9612607501	9612607501
	1	Thrust plate, (Period -9907)				
10	1	Clamping nut, (Period 9907-)	9612607701	9612607701	9612607701	9612607701
	1	Clamping nut, (Period -9907)				
11	1	Clip (Period 9907-)	9611990704	9611990704	9611990704	9611990704

* With angle shaped frame and left-hand hinge.

** With flat frame and left-hand hinge.

Recommended spare parts: Pos. 3.

TD 900-225

Not manufactured anymore

1.9

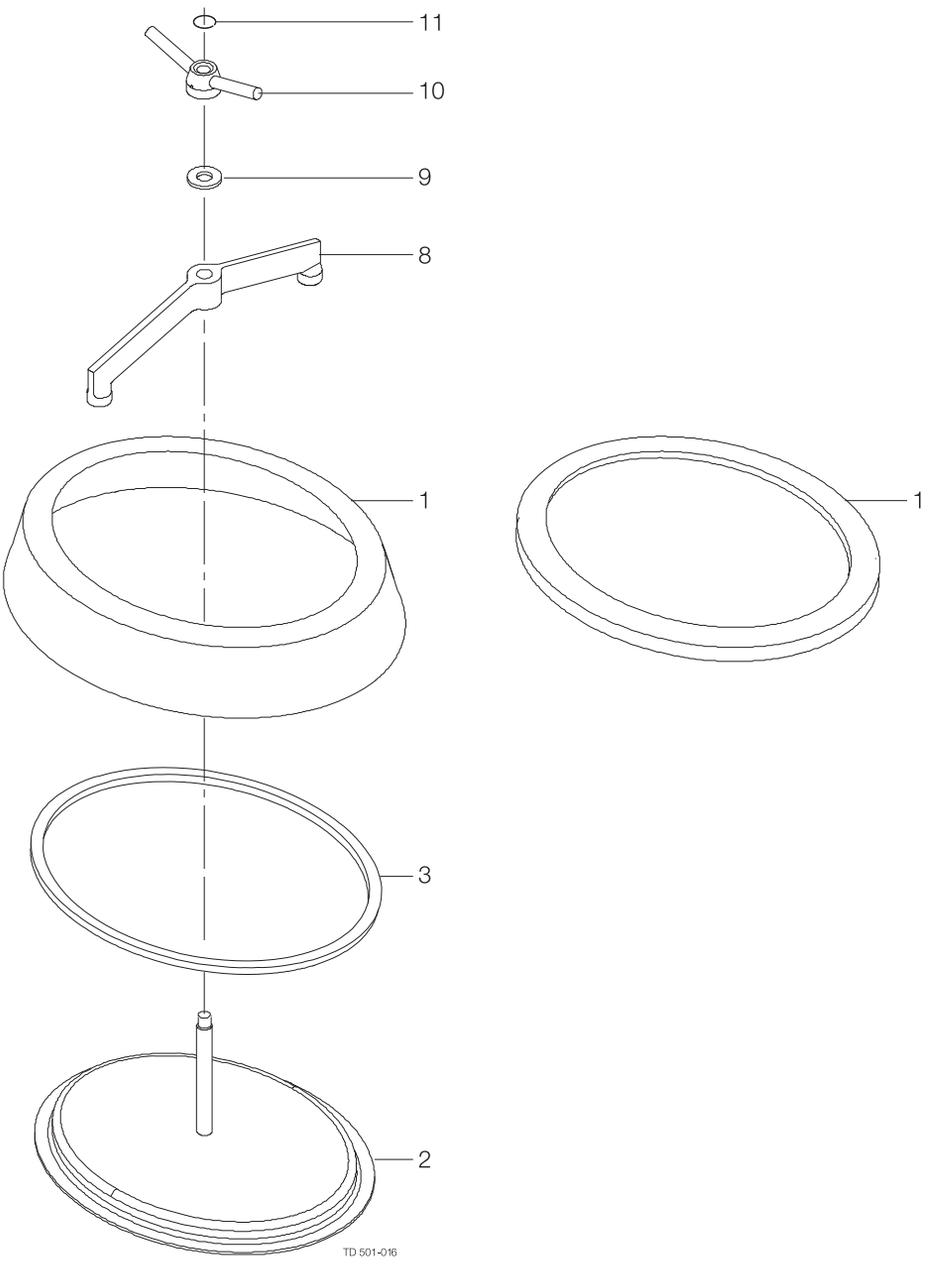

Pos	Qty	Denomination	1.4301 *	1.4571 *	1.4301 **	1.4571 **
1	1	Frame, 70x3				
	1	Frame, 70x4				
	1	Frame, 100x3				
	1	Frame, 100x4				
	1	Frame, 140x3				
	1	Frame, 140x4				
	1	Frame, 10x30				
	1	Frame, 12x30				
2	1	Cover, 3 mm (Period 9907-)				
	1	Cover, 3 mm (Period -9907)				
	1	Cover, 4 mm (Period 9907-)				
	1	Cover, 4 mm (Period -9907)				
3	1	Seal, NBR (Standard)	9612171004	9612171004	9612171004	9612171004
	1	Seal, EPDM	9612171003	9612171003	9612171003	9612171003
	1	Seal, FPM	9612171002	9612171002	9612171002	9612171002
	1	Seal, Q	9612171001	9612171001	9612171001	9612171001
8	1	Toggle, (Period 9907-)				
	1	Toggle, (Period -9907)				
9	1	Thrust plate, (Period 9907-)	9612607501	9612607501	9612607501	9612607501
	1	Thrust plate, (Period -9907)				
10	1	Clamping nut, (Period 9907-)	9612607701	9612607701	9612607701	9612607701
	1	Clamping nut, (Period -9907)				
11	1	Clip (Period 9907-)	9611990704	9611990704	9611990704	9611990704

* With angle shaped frame without hinge.

** With flat frame without hinge.

Recommended spare parts: Pos. 3.

TD 900-226

Not manufactured anymore

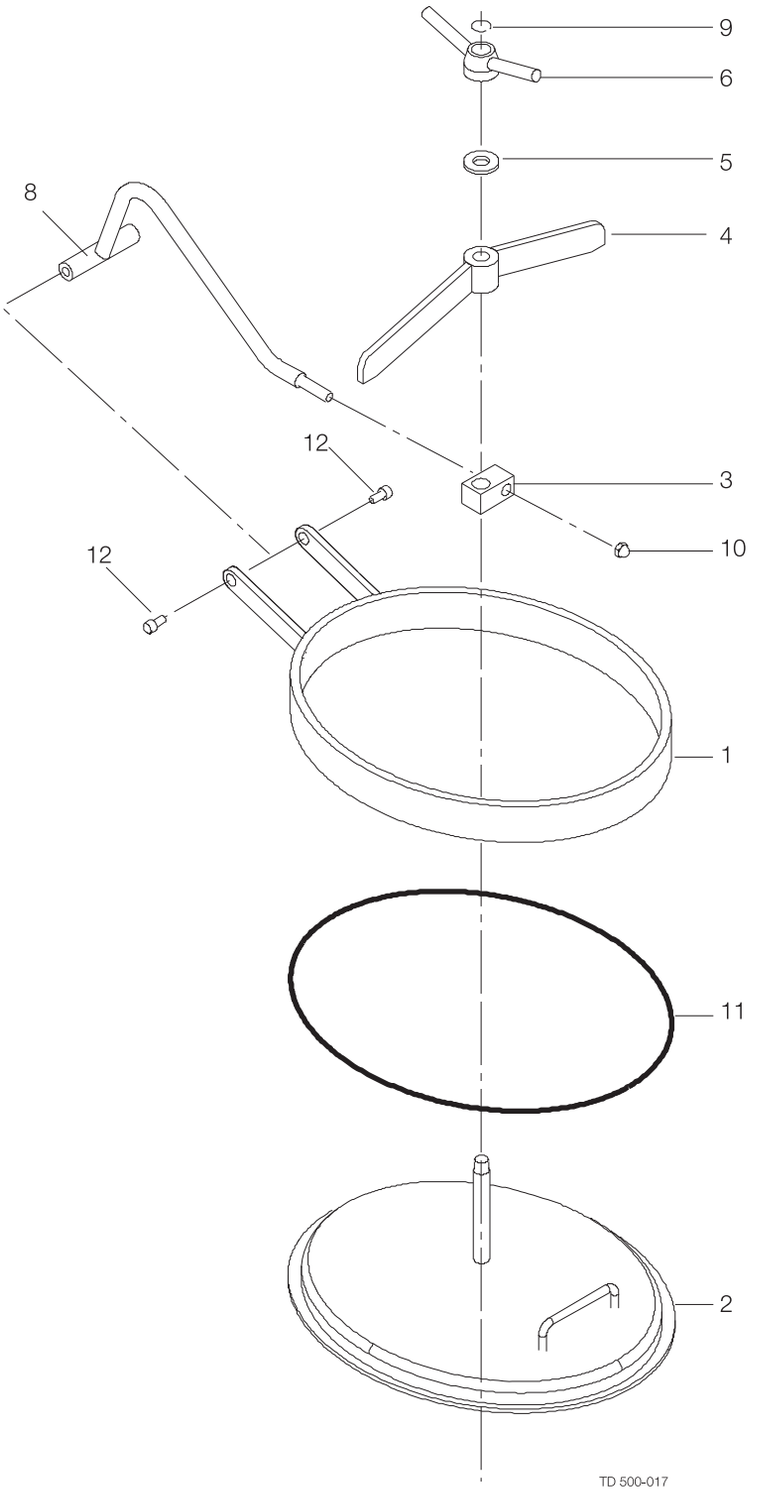

Pos	Qty	Denomination	LKD Low Frame 1.4301	LKDI High Frame 1.4301	LKD Low Frame 1.4404	LKDI High Frame 1.4404
1	1	Frame, (Period 9907-)				
	1	Frame, (Period -9907)				
2	1	Cover, (Period 9907-)				
	1	Cover, (Period -9907)				
3	1	Hub, (Period 9907-)	9612607601	9612607601	9612607601	9612607601
	1	Hub, (Period -9907)				
4	1	Toggle, (Period 9907-)				
	1	Toggle, (Period -9907)				
5	1	Trust collar, (Period 9907-)	9612607501	9612607501	9612607501	9612607501
	1	Trust collar, (Period -9907)				
6	1	Top nut, (Period 9907-)	9612607701	9612607701	9612607701	9612607701
	1	Top nut, (Period -9907)				
7	1	Bolt (Period -9907)				
8	1	Suspension arm, left, (Period 9907-)				
	1	Suspension arm, left, (Period -9907)				
9	1	Clip (Period 9907-)	9611990704	9611990704	9611990704	9611990704
	1	Screw (Period -9907)				
10	1	Nut, (Period 9907-)	9611991761	9611991761	9611991761	9611991761
	3	Nut, (Period -9907)				
11	1	Seal, NBR, black (Std.)	9611702057	9611702057	9611702057	9611702057
	1	Seal, EPDM	9611701590	9611701590	9611701590	9611701590
	1	Seal, FPM	9611701593	9611701593	9611701593	9611701593
	1	Seal, Silicone (Q)				
	1	Seal, NBR, white	9611701591	9611701591	9611701591	9611701591
12	2	Screw (Period 9907-)	9611991760	9611991760	9611991760	9611991760

Recommended spare parts: Pos. 11.

TD 900-222

Not manufactured anymore

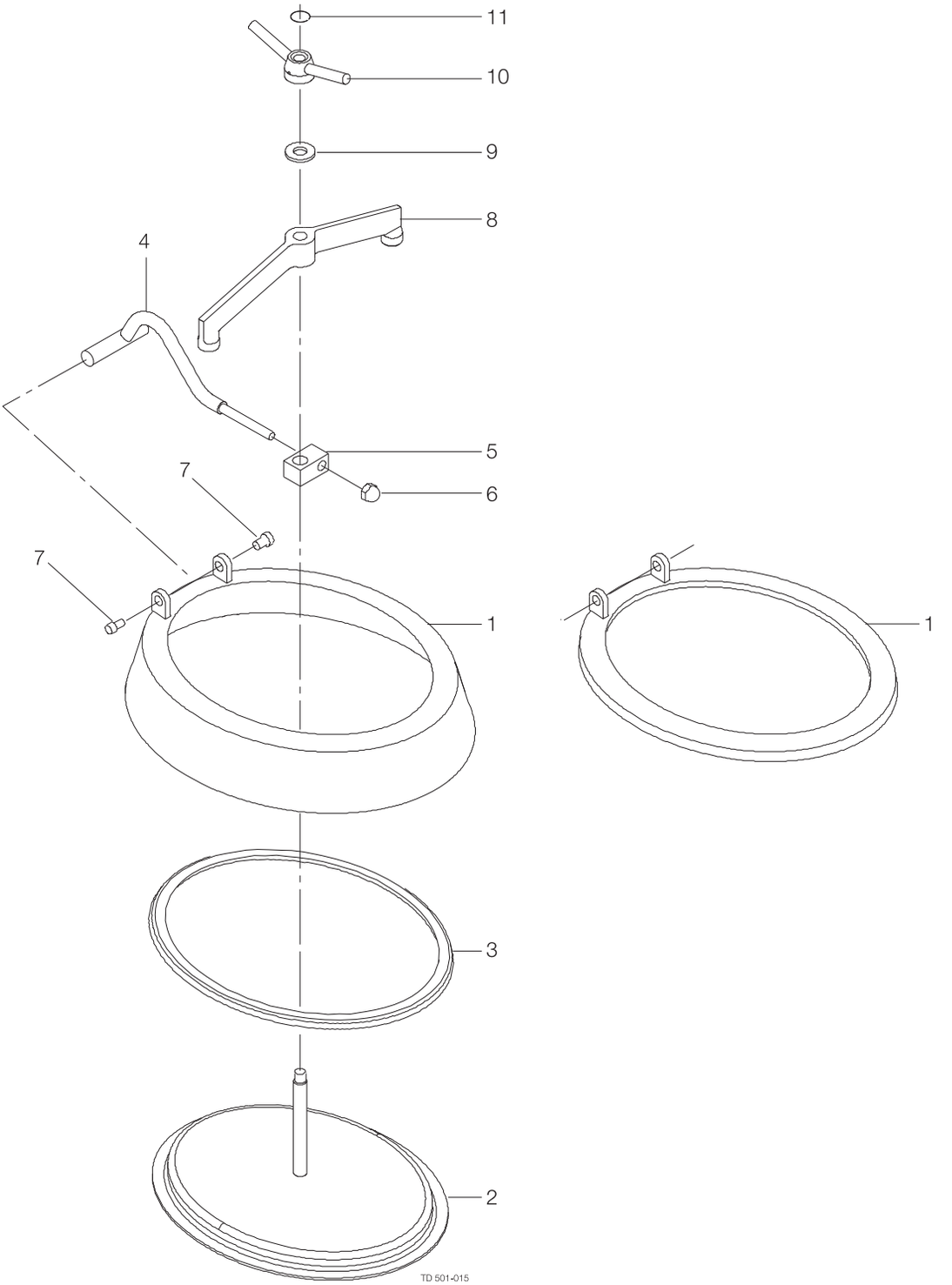

Pos	Qty	Denomination	1. 4301 *	1. 4571 *	1. 4301 **	1. 4571 **
1	1	Frame, 70x3				
	1	Frame, 70x4				
	1	Frame, 100x3				
	1	Frame, 100x4				
	1	Frame, 140x3				
	1	Frame, 140x4				
	1	Frame, 10x30				
	1	Frame, 12x30				
2	1	Cover, 3 mm (Period 9907-)				
	1	Cover, 3 mm (Period -9907)				
	1	Cover, 4 mm (Period 9907-)				
	1	Cover, 4 mm (Period -9907)				
3	1	Seal, NBR (Std.)	9612171004	9612171004	9612171004	9612171004
	1	Seal, EPDM	9612171003	9612171003	9612171003	9612171003
	1	Seal, FPM	9612171002	9612171002	9612171002	9612171002
	1	Seal, Q	9612171001	9612171001	9612171001	9612171001
4	1	Suspension arm				
5	1	Hub, (Period 9907-)	9612607601	9612607601	9612607601	9612607601
	1	Hub, (Period -9907)				
6	1	Nut	9611991761	9611991761	9611991761	9611991761
7	2	Screw	9611991760	9611991760	9611991760	9611991760
8	1	Toggle, (Period 9907-)				
	1	Toggle, (Period -9907)				
9	1	Thrust plate, (Period 9907-)	9612607501	9612607501	9612607501	9612607501
	1	Thrust plate, (Period -9907)				
10	1	Clamping nut, (Period 9907-)	9612607701	9612607701	9612607701	9612607701
	1	Clamping nut, (Period -9907)				
11	1	Clip (Period 9907-)	9611990704	9611990704	9611990704	9611990704

* With angle shaped frame and left-hand hinge.

** With flat frame and left-hand hinge.

Recommended spare parts: Pos. 3.

TD 900-227

Not manufactured anymore

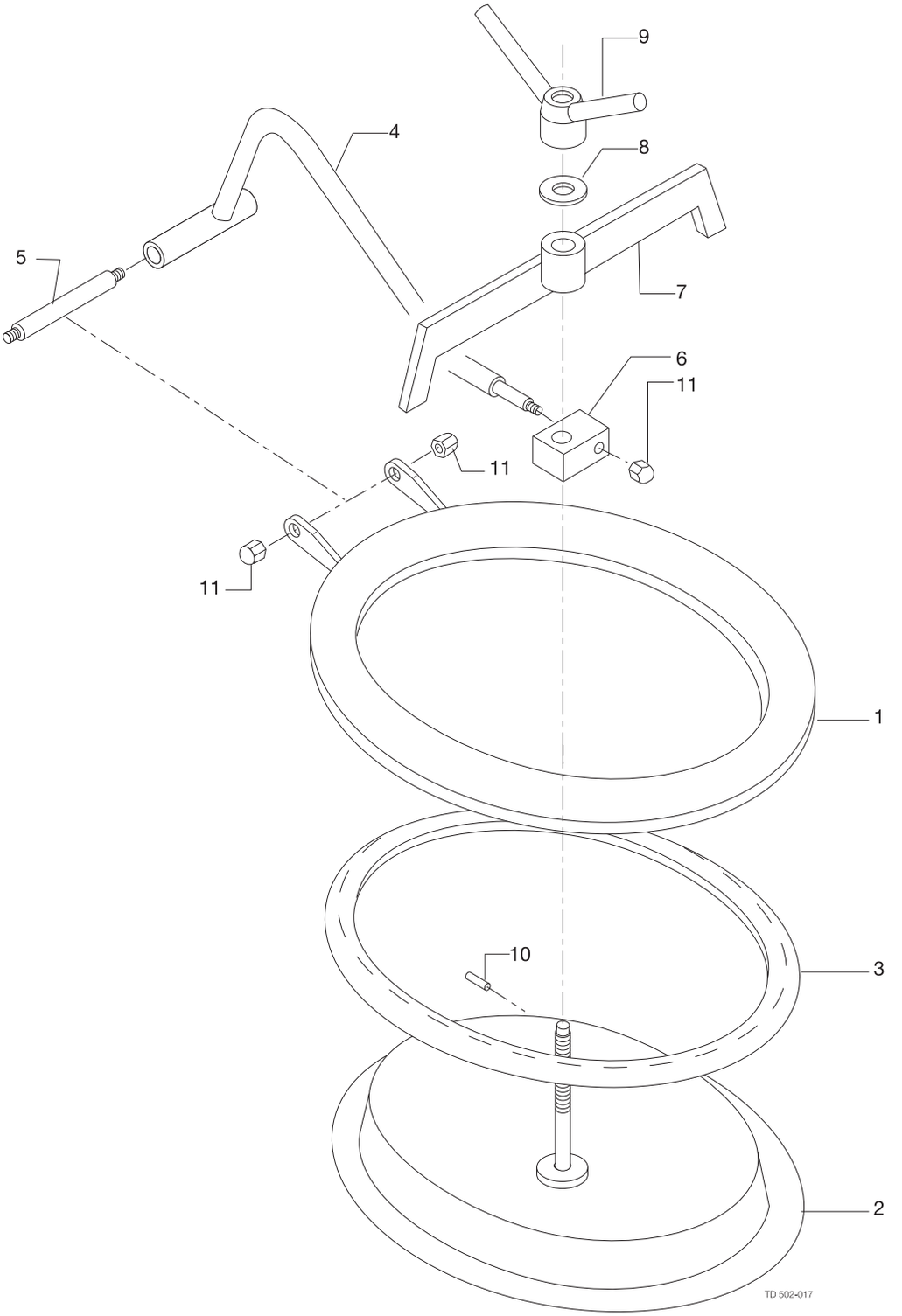

Pos		Qty	Denomination	W.Nr. 1.4301	W.Nr. 1.4401
1		1	Frame		
2		1	Cover		
3	□	1	Seal, (NBR)		
		1	Seal, (EPDM)		
4		1	Suspension arm		
5		1	Bolt		
6		1	Hub		
7		1	Bracket		
8		1	Trust collar		
9		1	Top nut		
10		1	Pin		
11		3	Nut		

Recommende spare parts: Pos. 3.

900-454

Not manufactured anymore

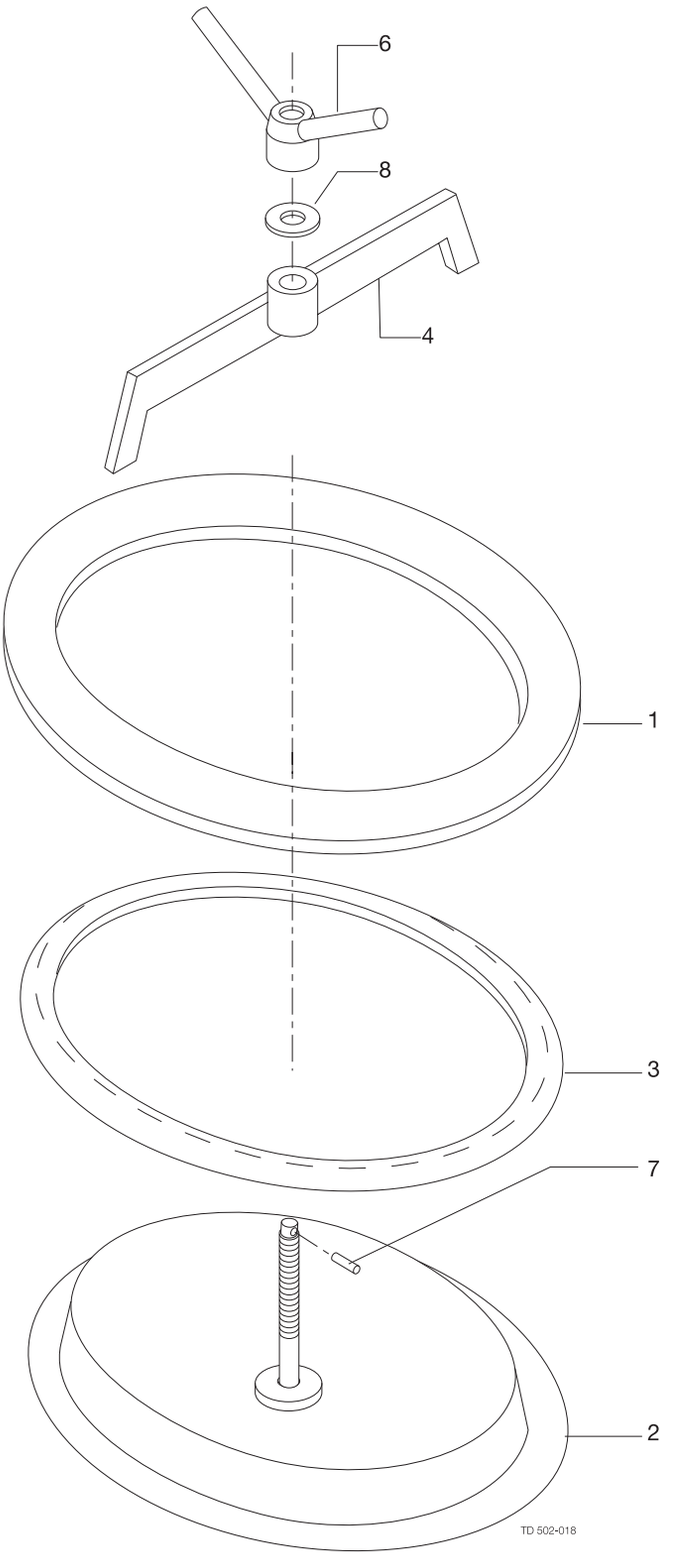

Pos		Qty	Denomination	W.Nr. 1.4301	W.Nr. 1.4401
1		1	Frame		
2		1	Cover		
3	□	1	Seal, (NBR)		
		1	Seal, (EPDM)		
4		1	Bracket		
5		1	Trust collar		
6		1	Top nut		
7		1	Pin		

Recommende spare parts: Pos. 3.

900-453

Not manufactured anymore

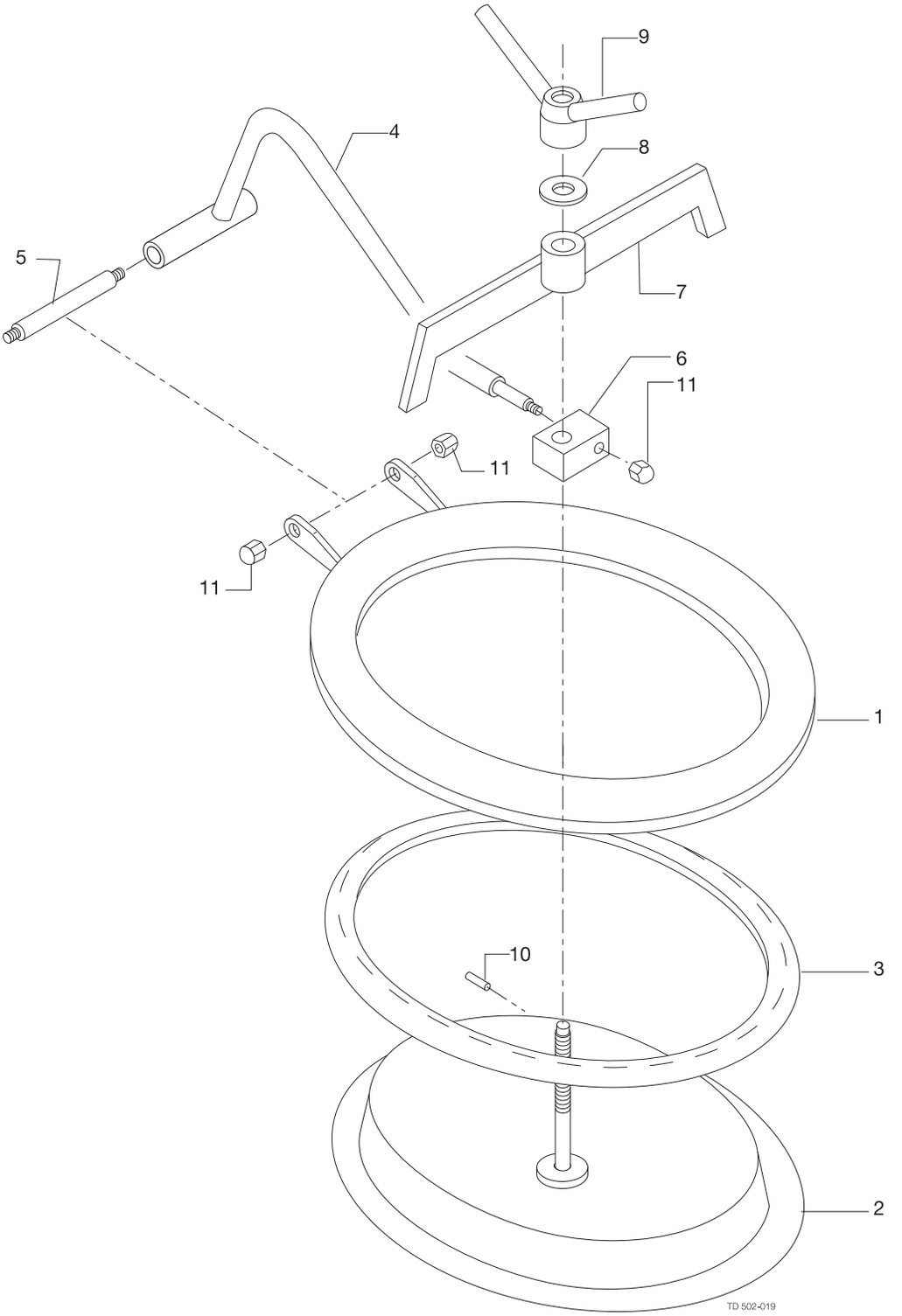

Pos		Qty	Denomination	W.Nr. 1.4301	W.Nr. 1.4401
1		1	Frame		
2		1	Cover		
3	□	1	Seal, (NBR)		
		1	Seal, (EPDM)		
4		1	Suspension arm		
5		1	Bolt		
6		1	Hub		
7		1	Bracket		
9		1	Top nut		
10		1	Pin		
11		3	Nut		

Recommende spare parts: Pos. 3.

900-455

Not manufactured anymore

1.9

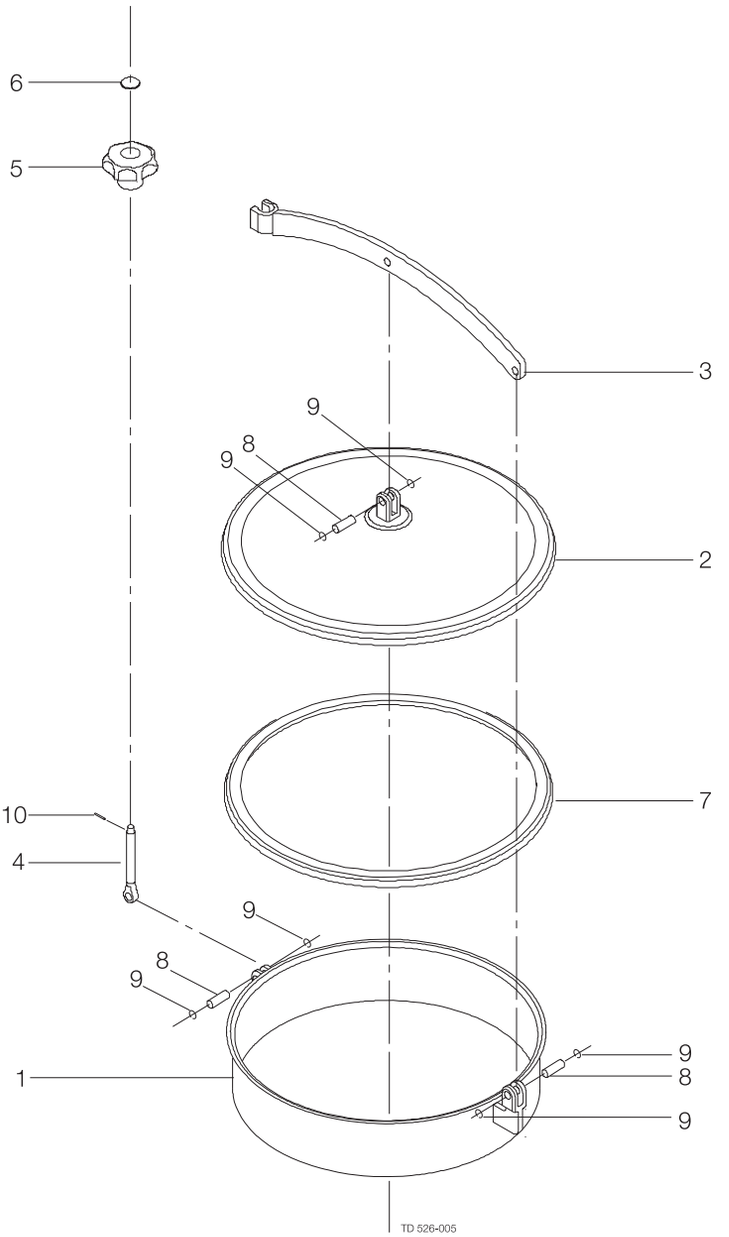

Pos	Qty	Denomination	DN 200	DN 300	DN 430	DN 500	DN 620
1	1	Frame, 85 mm (1.4301)					
	1	Frame, 85 mm (1.4404)					
	1	Frame, 100 mm (1.4301)					
	1	Frame, 100 mm (1.4404)					
	1	Frame, 150 mm (1.4301)					
	1	Frame, 150 mm (1.4404)					
	1	Frame, 200 mm (1.4301)					
	1	Frame, 200 mm (1.4404)					
2	1	Cover, (1.4301)					
	1	Cover, (1.4404)					
3	1	Toggle					
4	1	Swing bolt	9611700590	9611700590	9611700590	9611700590	9611700590
5	1	Handle, blue (Period 9907-)	9611700632	9611700632	9611700632	9611700632	9611700632
	1	Handle, green (Period -9907)					
6	1	Capsule, blue (Period 9907-)	9611700644	9611700644	9611700644	9611700644	9611700644
	1	Capsule, green (Period -9907)					
7	1	Seal, NBR (Standard)	9612317901		9611700450	9611701250	9612512802
	1	Seal, EPDM	9612317902		9611700451	9611701251	9612512801
	1	Seal, FPM	9612317903		9611700452	9611701252	9612512803
8	3	Pin	9611702105	9611702105	9611702105	9611702105	9611702105
9	6	Lock ring, EPDM	9611993309	9611993309	9611993309	9611993309	9611993309
10	1	Connex-pin	9611990561	9611990561	9611990561	9611990561	9611990561

Recommended spare parts: Pos. 7.

TD 900-229

Not manufactured anymore

1.9

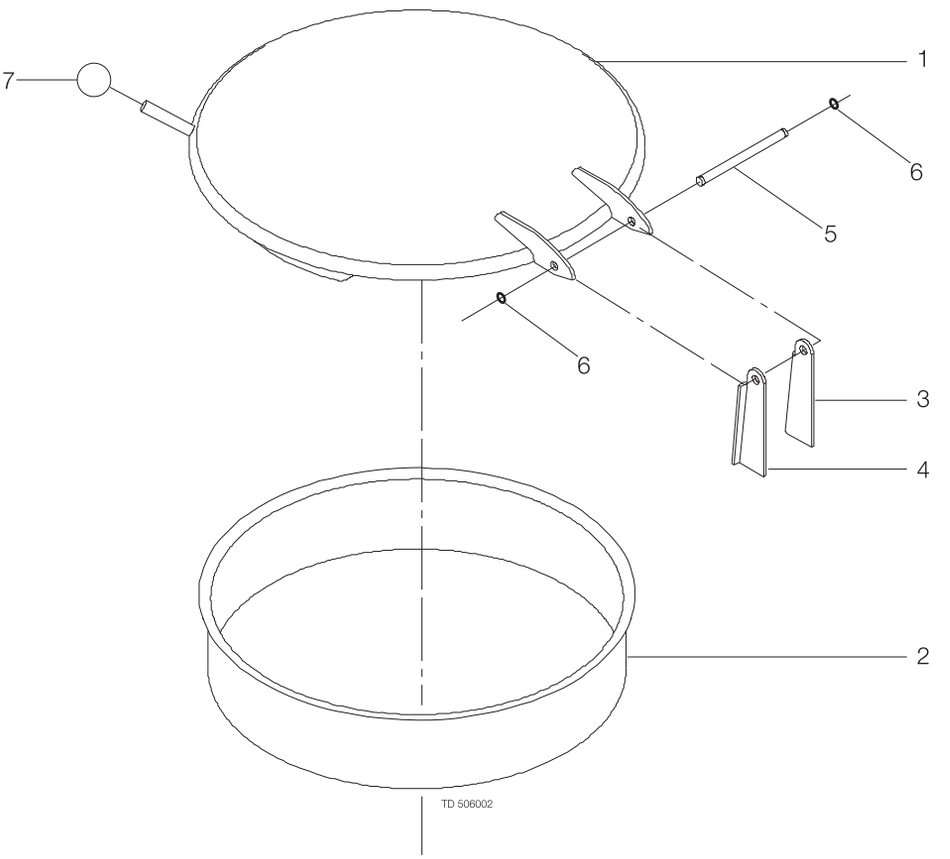

Pos	Qty	Denomination	20 mm Frame 1.4301	20 mm Frame 1.4404
1	1	Cover		
2	1	Frame 20 mm		
3	1	Left hinge ear		
4	1	Right hinge ear		
5	1	Pin for handle		
6	2	O-ring	9611992677	9611992677
7	1	Ball handle	9612289901	9612289901

Pos	Qty	Denomination	100 mm Frame 1.4301	100 mm Frame 1.4404
1	1	Cover		
2	1	Frame 100 mm		
3	1	Left hinge ear		
4	1	Right hinge ear		
5	1	Pin for handle		
6	2	O-ring	9611992677	9611992677
7	1	Ball handle	9612289901	9612289901

TD 900-231

Not manufactured anymore

1.9

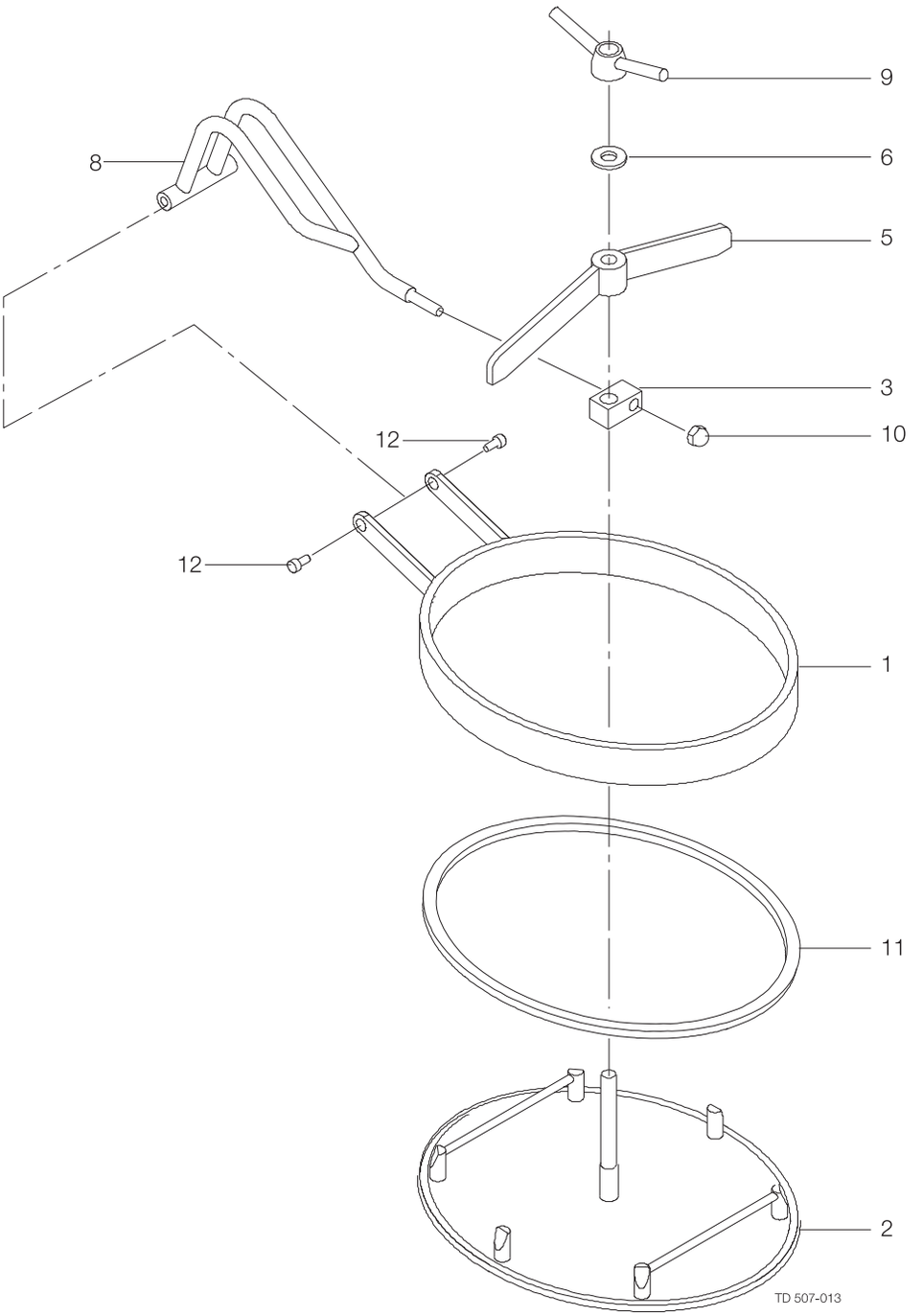

Pos	Qty	Denomination	LKTD 1.4301 10 mm cover	LKTD 1.4301 15 mm cover	LKTDI 1.4301 10 mm cover	LKTDI 1.4301 15 mm cover
1	1	Frame, (Period 9907-)				
	1	Frame, (Period -9907)				
2	1	Cover, (Period 9907-)				
	1	Cover, (Period -9907)				
3	1	Hub, (Period 9907-)				
	1	Hub, (Period -9907)				
4	1	Toggle, (Period 9907-)				
	1	Toggle, (Period -9907)				
5	1	Trust collar, (Period 9907-)	9612607501	9612607501	9612607501	9612607501
	1	Trust collar, (Period -9907)				
6	1	Top nut, (Period 9907-)	9612607701	9612607701	9612607701	9612607701
	1	Top nut, (Period -9907)				
7	2	Screw (Period 9907-)	9611991760	9611991760	9611991760	9611991760
	1	Bolt for hinge (Period -9907)				
8	1	Suspension arm, left (Period 9907-)				
	1	Suspension arm, left (Period -9907)				
9	1	Clip (Period 9907-)	9611990704	9611990704	9611990704	9611990704
	1	Stop screw (Period -9907)				
10	1	Nut, (Period 9907-)	9611991761	9611991761	9611991761	9611991761
	3	Nut, (Period -9907)				
11	1	Seal, NBR (Std.)				
	1	Seal, FPM	9611701602	9611701602	9611701602	9611701602
	1	Seal, Silicone (Q)				
12	2	Nut (Period 9907-)	9611991761	9611991761	9611991761	9611991761

Pos	Qty	Denomination	LKTD 1.4404 10 mm cover	LKTD 1.4404 15 mm cover	LKTDI 1.4404 10 mm cover	LKTDI 1.4404 15 mm cover
1	1	Frame, (Period 9907-)				
	1	Frame, (Period -9907)				
2	1	Cover, (Period 9907-)				
	1	Cover, (Period -9907)				
3	1	Hub, (Period 9907-)				
	1	Hub, (Period -9907)				
4	1	Toggle, (Period 9907-)				
	1	Toggle, (Period -9907)				
5	1	Trust collar, (Period 9907-)	9612607501	9612607501	9612607501	9612607501
	1	Trust collar, (Period -9907)				
6	1	Top nut, (Period 9907-)	9612607701	9612607701	9612607701	9612607701
	1	Top nut, (Period -9907)				
7	2	Screw (Period 9907-)	9611991760	9611991760	9611991760	9611991760
	1	Bolt for hinge (Period -9907)				
8	1	Suspension arm, left (Period 9907-)				
	1	Suspension arm, left (Period -9907)				
9	1	Clip (Period 9907-)	9611990704	9611990704	9611990704	9611990704
	1	Stop screw (Period -9907)				
10	1	Nut, (Period 9907-)	9611991761	9611991761	9611991761	9611991761
	3	Nut, (Period -9907)				
11	1	Seal, NBR (Std.)	9611702071	9611702071	9611702071	9611702071
	1	Seal, FPM	9611701602	9611701602	9611701602	9611701602
	1	Seal, Silicone (Q)	9611701604	9611701604	9611701604	9611701604
12	2	Nut (Period 9907-)	9611991761	9611991761	9611991761	9611991761

Recommended spare parts: Pos. 11.

TD 900-228

Not manufactured anymore

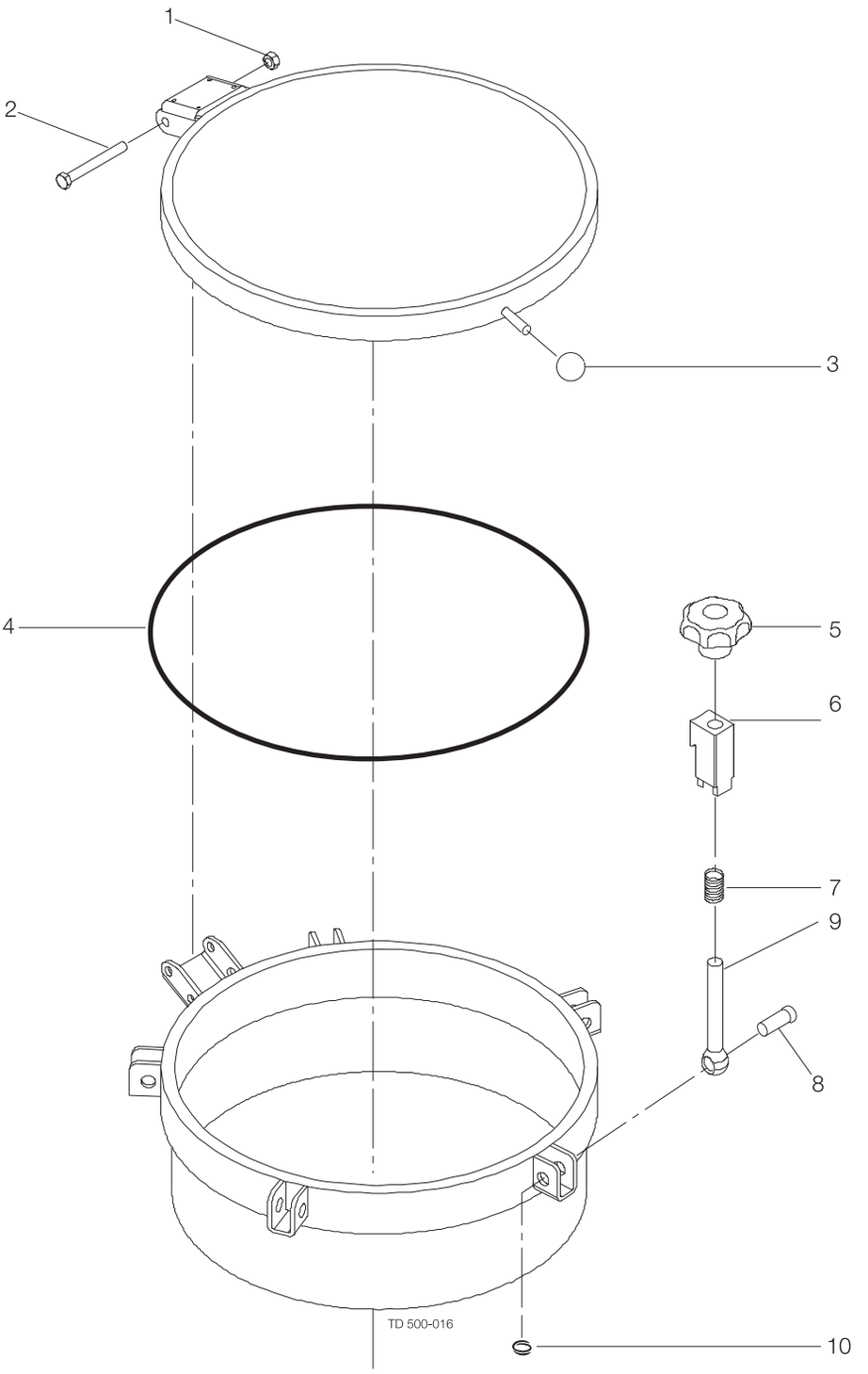

Pos	Qty	Denomination	
1	1	Nut	22189115
2	1	Screw	9611992790
3	1	Ball handle	9611991970
5		Handle, (plast)	9611700671
		Handle, (steel)	
6		Hub DN200-DN800	
7		Spring	
8		Pin	
9		Swing bolt	
10		Ring pin	9611992843

Pos	Qty	Denomination	DN200	DN300	DN400	DN450
	1	Seal, - EPDM	9611992137			9611992060
	1	Seal, - FPM	9611992138			
	1	Seal, - NBR	9611992139			

Pos	Qty	Denomination	DN500	DN620	DN800
	1	Seal, - EPDM	9611992065	9611992070	

Recommended spare Parts: Pos. 4.

TD 900-232/2

This is Alfa Laval

Alfa Laval is active in the areas of Energy, Marine, and Food & Water, offering its expertise, products, and service to a wide range of industries in some 100 countries. The company is committed to optimizing processes, creating responsible growth, and driving progress – always going the extra mile to support customers in achieving their business goals and sustainability targets.

Alfa Laval's innovative technologies are dedicated to purifying, refining, and reusing materials, promoting more responsible use of natural resources. They contribute to improved energy efficiency and heat recovery, better water treatment, and reduced emissions. Thereby, Alfa Laval is not only accelerating success for its customers, but also for people and the planet. Making the world better, every day. It's all about **Advancing better**™.

How to contact Alfa Laval

Contact details for all countries are continually updated on our web site. Please visit www.alfalaval.com to access the information.

Alfa Laval reserves the right to change specifications without prior notification.
Alfa Laval is a trademark registered and owned by Alfa Laval Corporate AB, Sweden. Alfa Laval © 2022

100001667-2-EN 2209

