Close at hand

Spare parts for Valves, Hygienic Fluid Handling Equipment, September 2022



1. Valves

Our valves are developed not only to meet your demands for safety, efficiency and hygiene, but also to ensure careful handling of your products.



General information 1.1
Ball valves 1.2
Butterfly valves 1.3
Control/check valves 1.4
Diaphragm valves 1.5
Double seal valves 1.6
Double seat valves 1.7
Regulating valves 1.8
Safety valves 1.9
Sampling valves 1.10
Shutter valves 1.11
Single seat valves 1.12

1.1 General information

Lubricant
Alfa Laval Silicone-based Food-grade Lubricant 1.1.6

Genuine spare parts and service kits
Genuine spare parts and service kits 1.1.8

Service tools
Alfa Laval service tools 1.1.9

Technical data - stainless steel and rubber materials
Technical Information 1.1.10

360°service portfolio
360° service portfolio 1.1.12

Service and maintenance training
Service and maintenance training 1.1.13

Preventive maintenance guidelines valves
Valves 1.1.14

360° service maintenance videos for valves
360° service & maintenance videos 1.1.16

Lubricant for Hygienic Fluid Handling Equipment

Alfa Laval Silicone-based Food-grade Lubricant

The Alfa Laval high-performance food-grade lubricant is based on silicone and developed for all types of rubber seals in contact with foodstuff.

Please notice the lubricant cannot be used for internal actuator seals.

For use by service and maintenance of your valves and pumps the following are now available:

- Item number: 8010014426
- Each bag contains a QR-code with access to the data sheet
- 1 bag of Alfa Laval Lubricants, containing 100 small bags of 2g each



Find the item in Anytime.

QR code- datasheet of item 8010014426

Total piece of mind

Genuine spare parts and service kits

Alfa Laval spare parts are engineered and machined for optimal fit with guarantee for superior performance and uptime.

Using Alfa Laval genuine spare parts ensures the lowest possible total cost of ownership over the entire life cycle of your Alfa Laval equipment.

Furthermore the Alfa Laval spare parts meet all certification requirements and include documentation package with full traceability (1935/2004/EC) compliance with hygienic standards USP, FDA, EU-regulations, 3-A, EHEDG, ASME BPE, etc.

Alfa Laval spare parts are available 24/7 through extensive network of channel partners and distribution centres, and you can always contact us for technical service support and training, if needed.

Benefits when buying genuine spare parts:

- Certified materials
- Guaranteed performance - tested in laboratories.
- Maximum uptime – proven reliability.
- Longer maintenance intervals.
- Continuously improvement to meet the highest requirements and hygienic standards.
- 3 years extended warranty on the pumps & valves.

Service kits

Alfa Laval recommends that you buy complete service kits instead of indiviual parts, as each service kit contain all the spare parts you need for generel maintenance.

Futhermore, the complete service kits gives you several other advantages such as:

- Save time - simply order one service kit, rather that a lot of invidual items.
- Each service kit has a single part number - less stock numbers to deal with.
- The price of the service kits is less that the total price of the individual items.
- You do not have to carry a large spare parts inventory.
- Service kit for UltraPure products include full Alfa Laval Q-doc package.
- Each service kit contain a small instruction with a QR code, with access to our service & maintenance guidelines and videos.



The right o-ring quality

O-ring compression and swell are very important to be within the design limits of the pump and seal tolerances.
If these are not correct, the seal will leak.

The grade of manufacture of the o-rings determines its characteristics:

- Hardness
- Tensile strength
- Compression set
- Swelling

Specially designed service tools for Alfa Laval equipment

Alfa Laval service tools

Part of our Alfa Laval 360° Service Portfolio, Alfa Laval service tools are especially developed to protect Alfa Laval hygienic equipment from faulty service and minimize downtime during maintenance.

Use

Alfa Laval has the specific tools required to service Alfa Laval hygienic equipment. These include tools for installing, operating, maintaining our hygienic equipment.

Benefits

Using the correct Alfa Laval service tools will:

- Decrease service time
- Protect staff from unnecessary safety risks
- Secure service quality
- Maintain equipment performance

Alfa Laval tools are specially designed for Alfa Laval equipment and enables exchange of wear parts in safe order for both the service operator and the equipment.



Technical data - stainless steel and rubber material

Technical Information

Our stainless steel material have the following demands to the contents of the most essential alloys:

Descriptions	Standard	Chrome Cr%	Nickel Ni%	Molybdenum Mo%	Carbon C%
AISI 304	ASTM A270	18.0-20.0	8.0-10.5	0.0	≤ 0.08
AISI 304L	ASTM A270	18.0-20.0	8.0-12.0	0.0	≤ 0.03
AISI 316L	ASTM A270	16.0-18.0	10.0-14.0	2.0-3.0	≤ 0.03
1.4301 (304)	EN 10088-1 (X 5CrNi18-10)	17.0-19.5	8.0-10.5	0.0	≤ 0.07
1.4307 (304L)	EN 10088-1 (X 2CrNi18-9)	17.5-19.5	8.0-10.0	0.0	≤ 0.03
1.4401 (316)	EN 10088-1 (X 5CrNiMo17-12-2)	16.5-18.5	10.0-13.0	2.0-2.5	≤ 0.07
1.4404 (316L)	EN 10088-1 (X 2CrNiMo17-12-2)	16.5-18.5	10.0-13.0	2.0-2.5	≤ 0.03
1.4435 (316L)	EN 10088-1 (X 2CrNiMo18-14-3)	17.0-19.0	12.5-15.0	2.5-3.0	≤ 0.03
1.4571 (316TI)	EN 10088-1 (X6CrNiMoTi17-12-2)	16.5-18.5	10.5-13.5	2.0-2.5	≤ 0.08

Rubber materials

In order to obtain the longest possible lifetime for rubber seals it is essential to choose the right quality for the actual duty. Consequently when choosing rubber quality, the characteristics of the different rubber types should be considered. All product wetted rubber material are in conformity of FDA.

EPDM rubber (Ethylene Propylene)

EPDM rubber is widely used within the food industry as it is resistant to most products used in this sector. Another advantage is that it may be used to a recommend max. temperatures of 140°C (244°F). However, there is one essential limitation, EPDM is not resistant to organic and non-organic oils and fats.

Actylonitrile Butadiene Rubber, NBR

NBR is the rubber type most frequently used for technical purposes. It is quite resistant to most hydrocarbons, e.g oil, grease and fat. It is sufficiently resistant to diluted lye and nitric acid and may be used to a recommend max. 95°C (203°F). As NBR is attacked by ozone it may not be exposed to ultraviolet rays and should thus consequently be stored so that this is avoided.

Silicone rubber, Q

The most significant quality of silicone rubber is that it can be applied from temperatures below -50°C (-58°F) to approx. + 180°C (356°F) and still keep its elasticity. The chemical resistance is satisfactory to most products. However, undiluted lye and acids as well as hot water and steam may destroy silicone rubber. The resistance to ozone is good.

Fluorine rubber, FPM

FPM is often used when other rubber types are unsuited, especially at high temperatures up to approx. 180°C (356°F). The chemical resistance is good to most products, however hot water, steam, lye, acid and alcohol should be avoided. The resistance to ozone is good.

Hydrogenated actylonitrileButadiene Rubber, HNBR

Mechanically strong and normally resistant to ozone and strong oxidizers, animal and vegetable fats, nonpolar solvents, oils and lubricants, water and aqueous solutions. The recommend max. temperature is 130°C (266°F).

Perfluoroalkoxy polymer, PFA

PFA is very similar to PTFE, but opposite to those PFA is thermo plastic and has minimal porosity. PFA has a very high mechanical strength which makes it a perfect choice when dealing with abbrasive products. The PFA seal offers longer service intervals. The recommend max. temperature for the PFA seal is 90°C (194°F).

Product and chemical resistance of flexible rubber materials

The information below is intended as an aid in selecting the best rubber quality for an actual application. It is not possible to state any general lifetime of rubber seals as many factors influence it: chemical attack, temperature, mechanical wear etc. Extreme temperatures, even within the generally accepted limits, may worsen other kinds of attack and thus reduce the lifetime.

Ratings

1 = Unsuitable.
2 = Limited suitability.
3 = Normal suitability.
4 = High suitability.
- = Not recommended for other reasons.

The table contains data which have been complied from the results of our own tests and the recommendations of our raw material suppliers. The data should be considered as recommendations only and will be brought up-to-date from time to time. They are based on constant contact with the specified product.
In case of doubt or lack of information it would be advisable to consult us directly, which will enable us to investigate specific applications.

Product or process		NBR[1)]	HNBR[2)]	EPDM[3)]	Q[4)]	FPM[5)]	PTFE[6)]
Dairy products (milk, cream)		3	3-4	3-4	3-4	-	3-4
Dairy products (sour milk products)		3	3-4	3-4	3-4	-	3-4
Brewery products (beer, hops etc.)		3	3-4	3-4	1-2	2-3	3-4
Wine and yeast		3	3-4	4	4	2-3	3-4
Animal and vegetable fats	100°C	3	4	1-2	3	4	3-4
Water and water solutions	< 70°C	3	4	4	3	2-4	3-4
Hot water and steam	< 130°C	1	4	4	2	-	3-4
Concentrated fruit juices and etheral oils	< 100°C	1	-	1	1	3	3-4
Non-oxydising acids	< 80°C	1-2	2	3	1-2	2	3-4
Oxydising acids	< 80°C	-	2	3	1	2	3-4
Weak concentrate of lye	< 100°C	2	3-4	4	2	2	3-4
Strong concentrate of lye	< 100°C	1	2-3	3	1	1	3-4
Mineral oils	< 110°C	3	4	-	-	4	3-4
Aliphatic carburetted hydrogen (hexane)		3	3	1	1	4	3-4
Aromatic carburetted hydrogen (benzole)		1	2	1	1	3	3-4
Alcohols		1-3	2-3	2-3	3-4	3-4	3-4
Ester and ketones		1-2	1-2	1-2	1-2	3-4	3-4
Ether		1	2	1	1-3	3-4	3-4
Methylene chloride		1	2	1	2-3	3-4	3-4
Ozone and atmospheric conditions		1-2	3	4	4	3-4	3-4

International designation of flexible rubber materials according to ISO R 1629.
ISO = International standard.

Notes

	Designation of flexible rubber materials	Abbreviation symbol
1)	Nitrile rubber	N
2)	Hydrogenated actylonitrile rubber	H
3)	Ethylene propylene rubber	E
4)	Silicone rubber	Q
5)	Fluorinated rubber	F
6)	Polytetraflour ethylene	

Services that extend performance

360° service portfolio

Alfa Laval's expert service is always on hand through our global network. Alfa Laval also offers a wide range of time-saving tools and resources to secure performance, making it easy to configure, size, and optimize Alfa Laval hygienic equipment.

Alfa Laval Service offers a broad range of spare parts, equipment, and services covering the entire equipment life cycle from start-up, support and maintenance to improvements and monitoring. We are committed to ensuring maximum uptime, continuous optimization of your customers' processes, Alfa Laval service kits and top quality spare parts, designed for durability and performance, are always available. We secure that Alfa Laval equipment remains in compliance with certificates and legal requirements in your market.

Alfa Laval Service maximizes the reliability and uptime of Alfa Laval equipment. The result is superior performance throughout the equipment life cycle to give you and your customers a competitive edge. Together with our global service network we can help secure long-term performance.

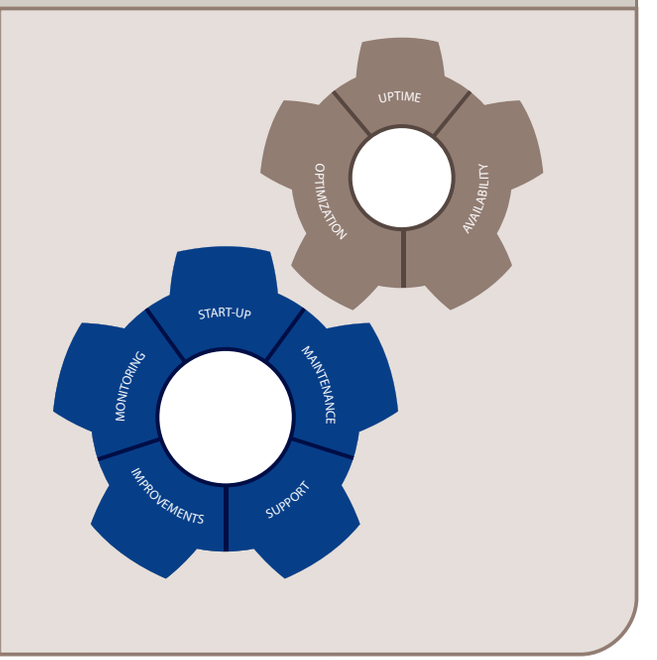

Maximize the reliability and uptime of your Alfa Laval equipment

Service and maintenance training



Objective
The objective of this training is to get “hands-on” training in maintenance and troubleshooting for key components from the Alfa Laval Hygienic Equipment portfolio, enabling you to do this out in the field.

Content
The training will focus on how to service, maintain, disassemble and rebuild the following Alfa Laval key components in accordance with the Alfa Laval service guidelines:

Valves

- Alfa Laval Butterfly Valves
- Alfa Laval Single Seat Valves
- Alfa Laval Unique Mixproof Valves
- Alfa Laval SMP-BC Mixproof Valves
- Alfa Laval CPM Valve

Automation

- Alfa Laval ThinkTop
- Alfa Laval ThinkTop Basic
- Alfa Laval IndiTop

Pumps

- Alfa Laval LKH Pump
- Alfa Laval SolidC Pumps
- Alfa Laval SRU Pumps
- Alfa Laval SX Pumps

Tank Equipment

- Alfa Laval Rotary Jet Heads
- Alfa Laval EnsaFoil Agitators

There will be a focus on Alfa Laval Service Kits, preventive maintenance, and a structured way of doing trouble shooting

Qualifications
- Basic knowledge of the Alfa Laval Hygienic Equipment portfolio
- Basic English skills

Participants
Maintenance and service engineers, technical support.

Dates
Training will be held twice a year.

Questions regarding the training?
You are welcome to contact your local Alfa Laval representative.

Preventive maintenance guidelines

Valves

Plan your budget and your downtime

A production stop caused by poor operation or breakdown is costly, both in lost production and expensive servicing.

The most cost-effective way to ensure product safety and production reliability is to plan and carry out service at scheduled intervals.

Using the Alfa Laval guidelines it is easy to plan the relevant maintenance intervals. You can plan your operating budget and the risk of breakdowns is virtually eliminated. Preventive maintenance makes sense financially.

Instruction manuals and service videos

Detailed manuals are supplied with every product. Service and maintenance videos have been created to enable you to service Alfa Laval products in a correct and efficient way. Scan the QR code to access the service videos.

Genuine spare parts and service kits

Alfa Laval Service Kits and Upgrade Kits are available for scheduled maintenance. They contain all the relevant parts for needed for general service. Using genuine Alfa Laval spare parts guarantees the right quality and composition of materials. Needless to say they come with full traceability. Scan the QR code to access the spare parts catalogue.



Alfa Laval service tools

Alfa Laval has the specific tools required to service Alfa Laval hygienic equipment. These include tools for installing, operating and maintaining our hygienic equipment.

Using genuine spare parts ensures your certicates are still valid.

Example of exploded view - Unique Mixproof

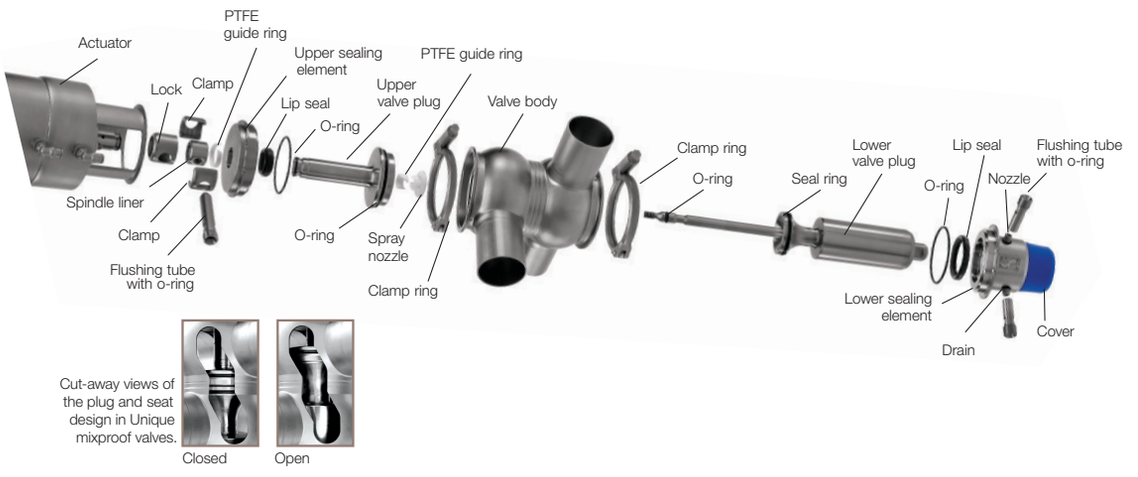

Inspect the valves regularly

The Alfa Laval valves are available in various configurations to fit specific applications. To inspect the valves you need to know the type of valves and which seals are used. This information can be obtained online using the serial number, which is laser-marked on the actuator together with the year of manufacture.

Preventive maintenance aims to prevent equipment failures with e.g. regular inspection of seals, lubrication and/or adjustments to surrounding equipment without prior knowledge of equipment failure. Based on experience and knowledge of the running conditions, it is also possible to replace wear parts before they fail. Keeping a record of the valve is a good way to build experience for inspection planning.

This Preventive Maintenance Guideline is applicable to most types of valves. Some examples are shown below:

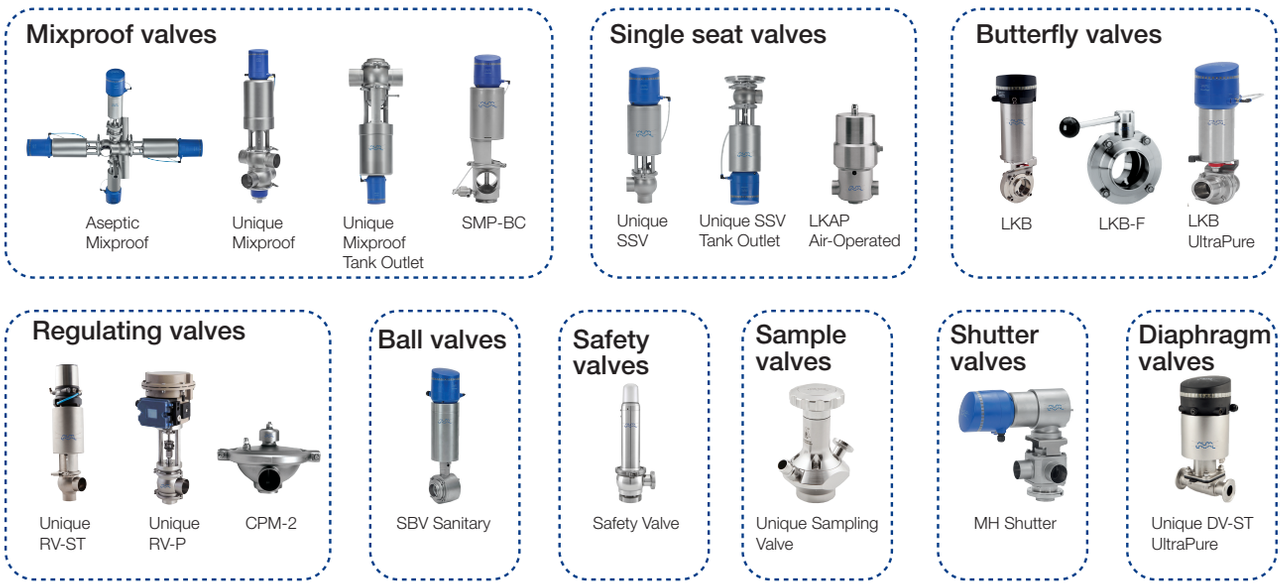

Suggested scheduled maintenance intervals

Several factors influence the maintenance cycle. The number of activations is important but even with few activations the rubber materials will harden over time and need replacement. The time depends on the product contents, concentration and type of CIP, SIP, differential pressure and processing temperatures.

To ensure that your valves operate efficiently, it is essential to follow a simple preventive maintenance programme. Good maintenance requires careful attention at regular intervals. For lubrication please always refer to the manual for specific information on oil/grease types and required maintenance. **Alfa Laval recommends**:

- Always follow the instruction manual for the specific valve.
- Lubricate relevant rubber parts with the lubricant supplied with the service kit before fitting.
- Service kit for valves actuator parts: replace after 5 years or depending on working conditions.
- Service kit for valves product wetted parts: replace every 12 months or depending on working conditions.
- Service kit for Unique sampling valves: replace after 500-1000 samples depending on working conditions.

The above guidelines may not apply in all working conditions.
Please contact Alfa Laval for information relating to specific applications.

How to service Alfa Laval products in a correct and efficient way

360° service & maintenance videos

As part of the 360° Service Portfolio offering, 22 service & maintenance videos have been introduced, covering 5 core products. The service & maintenance videos have been created to enable you to service Alfa Laval products in a correct and efficient way

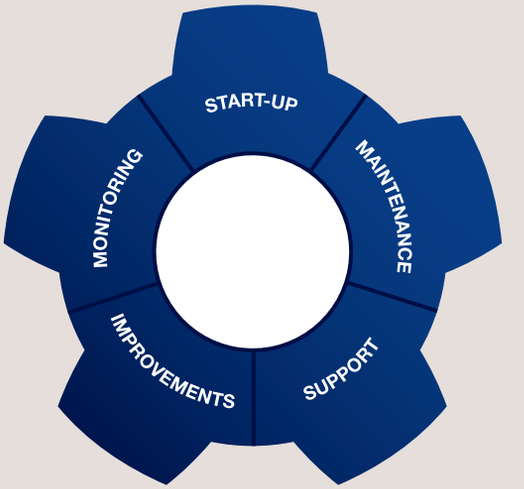

Features

The following features make the service & maintenance videos easy to work with:

- Short and informative - focus on vital service steps
- Clear demonstrations of how to use the different tools
- English speak
- Available on YouTube and Alfa Laval Anytime, our eBusiness

Alfa Laval YouTube channel

In Alfa Laval's YouTube channel, you can see videos about Alfa Laval in general and about our products in the food, dairy, beverage and pharma industries. Subscribe - and get notified when we upload a new video.

Products covered

- Alfa Laval Unique Mixproof Valves
- Alfa Laval SMP-BC Mixproof Valves
- Alfa Laval Unique Single Seat Valves
- Alfa Laval service kits and genuine spare parts

Alfa Laval service kits

Alfa Laval Unique Mixproof valves - replace product wetted parts

Alfa Laval Unique Mixproof valves - replace radial seal

Alfa Laval Unique Mixproof valves - replace axial seal

Alfa Laval SMP-BC Mixproof valves - replace seals

Alfa Laval Unique SSV - replace product wetted seals (shut-off)

Alfa Laval Unique SSV - replace product wetted seals (change-over)

Alfa Laval Unique SSV - maintainable actuator

Alfa Laval Unique SSV - replace actuator bushing

1.2 Ball valves

The full bore design with zero flow restriction makes the Alfa Laval range the optimum choice for viscous or particulate liquids.



Spare parts

SBV Sanitary Ball Valve, inch tube 1.2.22
SBV Sanitary Ball Valve, DIN tube 1.2.26
5308 Series Ball Valves, ½" - 2" 1.2.30
5308 Series Ball Valves, 3" & 4" 1.2.32

Spare parts for obsolete products

Ball Valve UltraPure, 2½" - 4" 1.2.34
Ball Valve UltraPure, ½"-2" 1.2.36
4308 Series Ball Valves 1.2.38

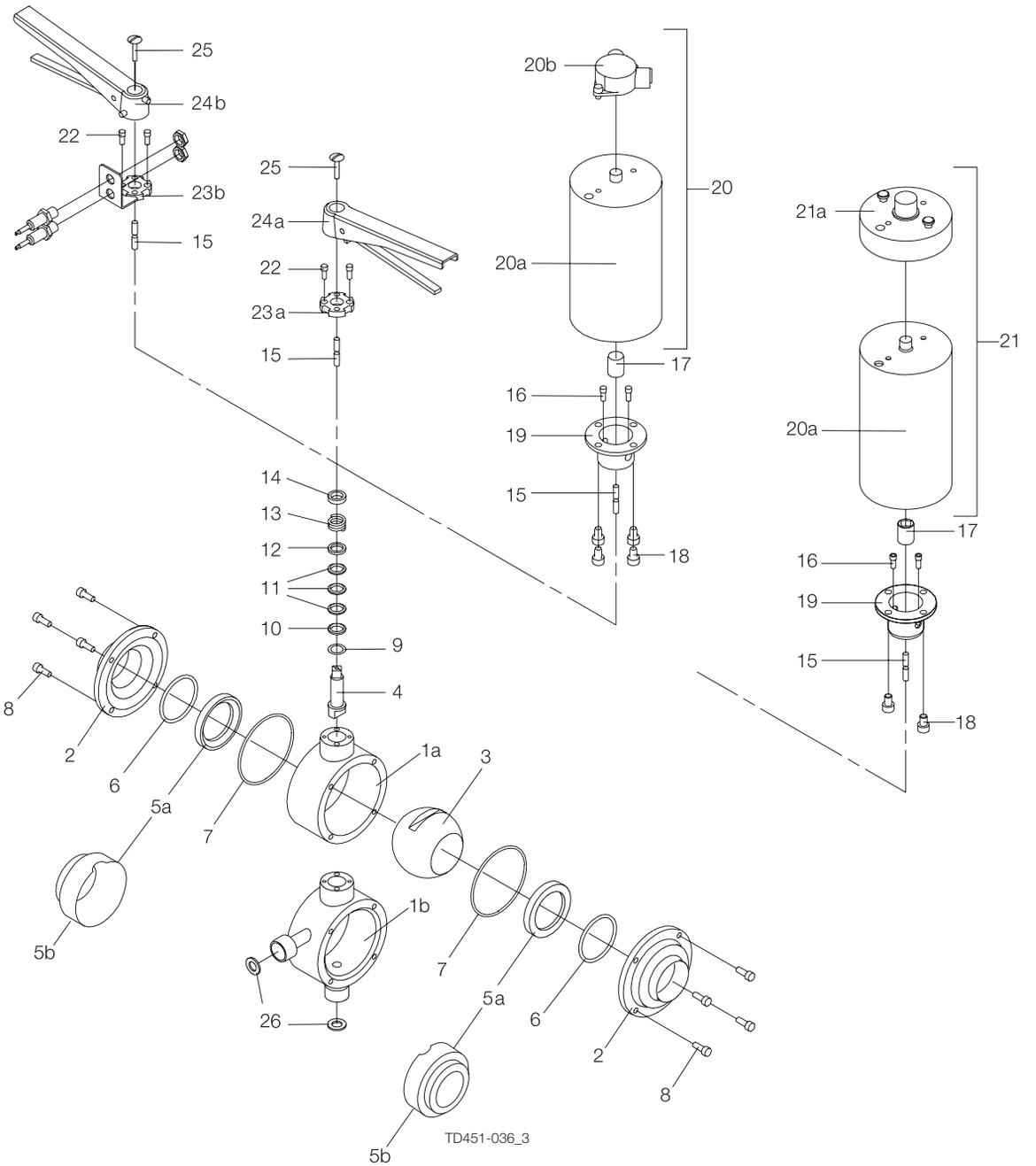
25
24b
22
23b
15
25
24a
22
23a
15
20b
20
20a
17
16
19
15
18
21a
21
20a
17
16
19
15
18
14
13
12
11
10
9
4
8
2
6
5a
7
1a
3
5b
1b
26
7
5a
6
2
8
5b
TD451-036_3

Pos		Qty	Denomination	25 mm	38 mm	51 mm	63.5 mm	76.1 mm	101.6 mm
1a		1	Valve body	9612647501	9612647535	9612647547	9612647559	9612647571	9612647584
1b		1	Valve body, for cavity cleaning	9612647673	9612647674	9612647675	9612647676	9612647677	9612647678
2		2	Flange	9612647502	9612647536	9612647548	9612647560	9612647572	9612647585
3		1	Ball	9612647503	9612647537	9612647549	9612647561	9612647573	9612647586
4		1	Stem	9612647504	9612647504	9612647550	9612647550	9612647550	9612647587
5a	□♦	2	Valve seat						
5b	○★	2	Valve seat, for cavity fillers						
6	□♦○★	2	O-ring, EPDM (std)						
			O-ring, NBR						
			O-ring, Q						
			O-ring, FPM						
7	□♦○★	2	O-ring, EPDM (std)						
			O-ring, NBR						
			O-ring, Q						
			O-ring, FPM						
8		8	Flange screw,	9612647514	9612647514	9612647514			
		12	Flange screw,				9612647514	9612647583	
		16	Flange screw,						9612647583
9	♦★	1	Sliding ring						
10	♦★	1	Support ring						
11	♦★	3	V-rings						
12	♦★	1	Pressure ring						
13		1	Spring	9612647519	9612647519	9612647519	9612647519	9612647519	9612647602
14	♦★	1	Slide bearing						
15		2	Pin	9612647521	9612647521	9612647521	9612647521	9612647521	9612647604
16		2	Screw (act.)	9612647522	9612647522	9612647522	9612647522	9612647522	9612647605
17		1	Coupling	9612647523	9612647523	9612647523	9612647523	9612647523	9612647606
18		2	Screw	9612647524	9612647524	9612647524	9612647524	9612647524	9612647607
19		1	Bonnet	9612647525	9612647525	9612647525	9612647525	9612647525	9612647608
20		1	Actuator complete, standard version,	9612647680	9612647680	9612647680	9612647680	9612647680	9612647681
20a			Actuator	9612647526	9612647526	9612647526	9612647526	9612647526	9612647609
20b		1	Position indicator complete	9612647527	9612647527	9612647527	9612647527	9612647527	9612647527
21			Actuator complete, ThinkTop version,	9612647682	9612647682	9612647682	9612647682	9612647682	9612647683
20a			Actuator	9612647526	9612647526	9612647526	9612647526	9612647526	9612647609
21a		1	ThinkTop adapter complete	9612647528	9612647528	9612647528	9612647528	9612647528	9612647610
22		2	Screw (man.)	9612647529	9612647529	9612647529	9612647529	9612647529	
23a		1	Top plate	9612647530	9612647530	9612647530	9612647530	9612647530	
23b			Top plate, for position indication	9612647531	9612647531	9612647531	9612647531	9612647531	9612647613
24a		1	Handle	9612647532	9612647532	9612647532	9612647532	9612647532	
24b			Handle, for position indication	9612647533	9612647533	9612647533	9612647533	9612647533	
25		1	Screw	9612647534	9612647534	9612647534	9612647534	9612647534	
26		2	Seal for valves with cavity cleaning connections **	9612647679	9612647679	9612647679	9612647679	9612647679	9612647679

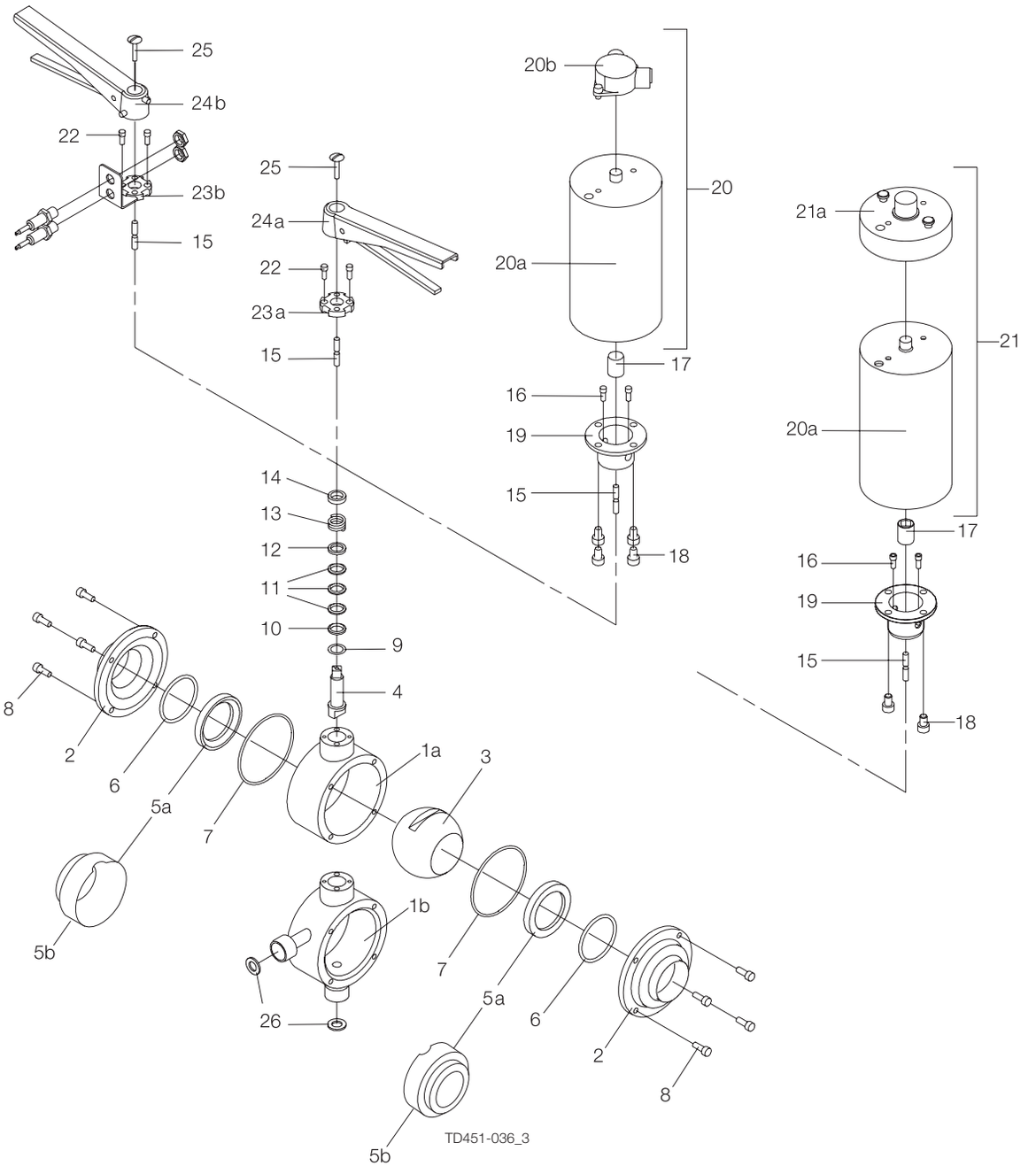
25
24b
22
23b
15
25
24a
22
23a
15
20b
20
20a
17
16
19
15
18
21a
21
20a
17
16
19
15
18
14
13
12
11
10
9
4
8
2
6
5a
7
1a
3
5b
1b
26
7
5a
6
2
8
5b
TD451-036_3

		25 mm	38 mm	51 mm	63.5 mm	76.1 mm	101.6 mm
Service kits for product wetted parts							
□	Service kit, EPDM (std.)	9612647701	9612647709	9612647717	9612647725	9612647733	9612647741
□	Service kit, NBR	9612647702	9612647710	9612647718	9612647726	9612647734	9612647742
□	Service kit, Q	9612647703	9612647711	9612647719	9612647727	9612647735	9612647743
□	Service kit, FPM	9612647704	9612647712	9612647720	9612647728	9612647736	9612647744
Service kits for cavity fillers							
○	Service kit, EPDM (std.)	9612647801	9612647809	9612647817	9612647825	9612647833	9612647841
○	Service kit, NBR	9612647802	9612647810	9612647818	9612647826	9612647834	9612647842
○	Service kit, Q	9612647803	9612647811	9612647819	9612647827	9612647835	9612647843
○	Service kit, FPM	9612647804	9612647812	9612647820	9612647828	9612647836	9612647844

		25 mm	38 mm	51 mm	63.5 mm	76.1 mm	101.6 mm
Service kits for all seals							
♦	Service kit, EPDM (std.) *	9612647705	9612647713	9612647721	9612647729	9612647737	9612647745
♦	Service kit, NBR *	9612647706	9612647714	9612647722	9612647730	9612647738	9612647746
♦	Service kit, Q *	9612647707	9612647715	9612647723	9612647731	9612647739	9612647747
♦	Service kit, FPM *	9612647708	9612647716	9612647724	9612647732	9612647740	9612647748
Service kits for cavity fillers - all seals							
★	Service kit, EPDM (std.) *	9612647805	9612647813	9612647821	9612647829	9612647837	9612647845
★	Service kit, NBR *	9612647806	9612647814	9612647822	9612647830	9612647838	9612647846
★	Service kit, Q *	9612647807	9612647815	9612647823	9612647831	9612647839	9612647847
★	Service kit, FPM *	9612647808	9612647816	9612647824	9612647832	9612647840	9612647848

* Including mounting tool for stem gasket unit
** Not included in service kits

Parts marked with □♦○★ are included in the service kits.
Recommended spare parts: Service kits.

900152/1

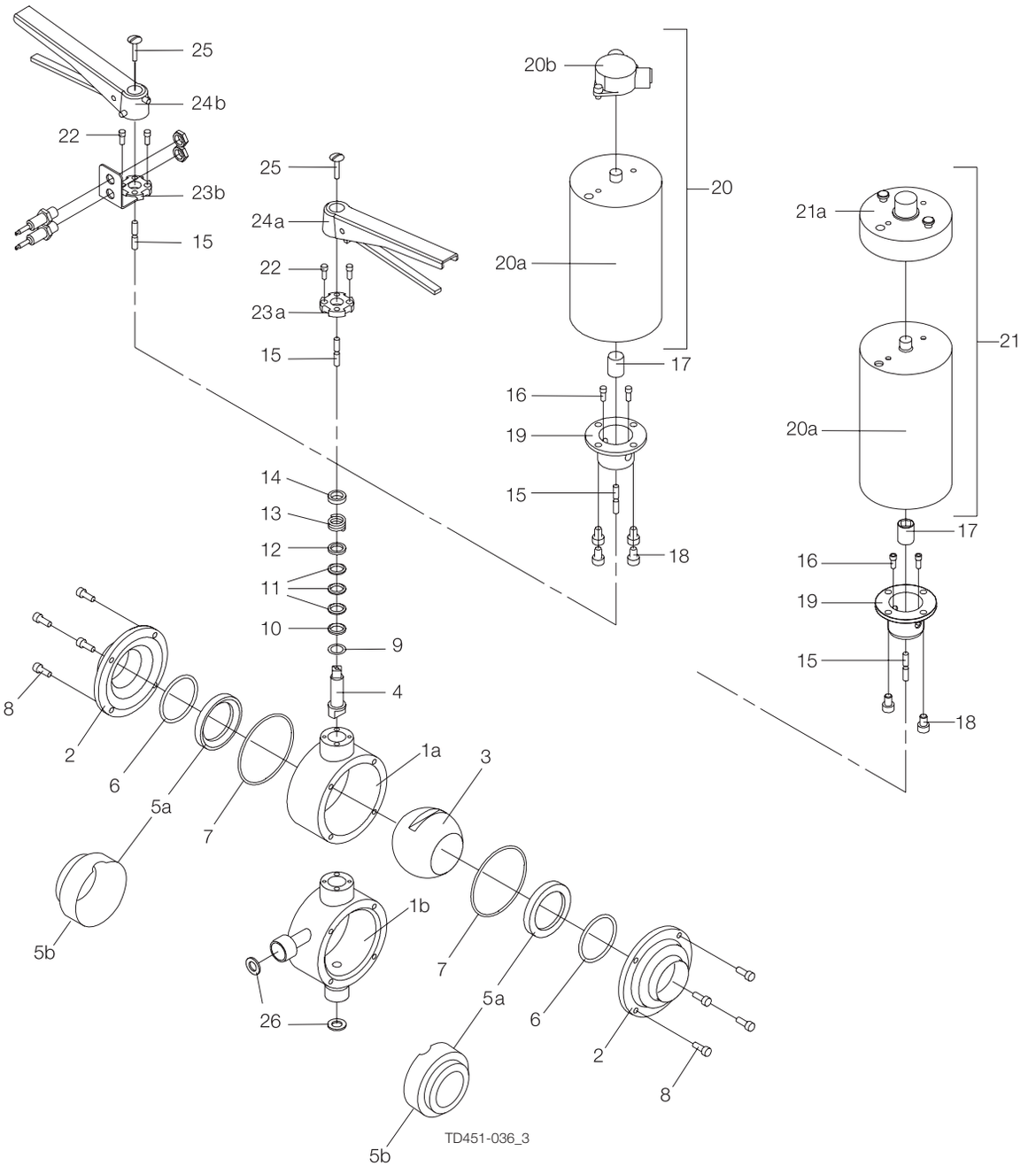
25
24b
22
23b
15
25
24a
22
23a
15
20b
20
20a
17
16
19
15
18
21a
21
20a
17
16
19
15
18
14
13
12
11
10
9
4
8
2
6
5a
7
1a
3
5b
1b
26
7
5a
6
2
8
5b
TD451-036_3

Pos		Qty	Denomination	DN25	DN40	DN50	DN65	DN80	DN100
1a		1	Valve body	9612647501	9612647535	9612647547	9612647559	9612647571	9612647584
1b		1	Valve body, for cavity cleaning	9612647673	9612647674	9612647675	9612647676	9612647677	9612647678
2		2	Flange	9612647617	9612647624	9612647631	9612647638	9612647645	9612647652
3		1	Ball	9612647618	9612647625	9612647632	9612647639	9612647646	9612647653
4		1	Stem	9612647504	9612647504	9612647550	9612647550	9612647550	9612647587
5a	□♦	2	Valve seat						
5b	○★	2	Valve seat, for cavity fillers						
6	□♦○★	2	O-ring, EPDM (std)						
			O-ring, NBR						
			O-ring, Q						
			O-ring, FPM						
7	□♦○★	2	O-ring, EPDM (std)						
			O-ring, NBR						
			O-ring, Q						
			O-ring, FPM						
8		8	Flange screw,	9612647514	9612647514	9612647514			
		12	Flange screw,				9612647514	9612647583	
		16	Flange screw,						9612647583
9	♦★	1	Sliding ring						
10	♦★	1	Support ring						
11	♦★	3	V-rings						
12	♦★	1	Pressure ring						
13		1	Spring	9612647519	9612647519	9612647519	9612647519	9612647519	9612647602
14	♦★	1	Slide bearing						
15		2	Pin	9612647521	9612647521	9612647521	9612647521	9612647521	9612647604
16		2	Screw (act.)	9612647522	9612647522	9612647522	9612647522	9612647522	9612647605
17		1	Coupling	9612647523	9612647523	9612647523	9612647523	9612647523	9612647606
18		2	Screw	9612647524	9612647524	9612647524	9612647524	9612647524	9612647607
19		1	Bonnet	9612647525	9612647525	9612647525	9612647525	9612647525	9612647608
20		1	Actuator complete, standard version	9612647680	9612647680	9612647680	9612647680	9612647680	9612647681
20a			Actuator	9612647526	9612647526	9612647526	9612647526	9612647526	9612647609
20b		1	Position indicator complete	9612647527	9612647527	9612647527	9612647527	9612647527	9612647527
21			Actuator complete, ThinkTop version	9612647682	9612647682	9612647682	9612647682	9612647682	9612647683
20a			Actuator	9612647526	9612647526	9612647526	9612647526	9612647526	9612647609
21a		1	ThinkTop adapter complete	9612647528	9612647528	9612647528	9612647528	9612647528	9612647610
22		2	Screw (man.)	9612647529	9612647529	9612647529	9612647529	9612647529	
23a		1	Top plate	9612647530	9612647530	9612647530	9612647530	9612647530	
23b			Top plate, for position indication	9612647531	9612647531	9612647531	9612647531	9612647531	9612647613
24a		1	Handle	9612647532	9612647532	9612647532	9612647532	9612647532	
24b			Handle, for position indication	9612647533	9612647533	9612647533	9612647533	9612647533	
25		1	Screw	9612647534	9612647534	9612647534	9612647534	9612647534	
26		2	Seal for valves with cavity cleaning connections **	9612647679	9612647679	9612647679	9612647679	9612647679	9612647679

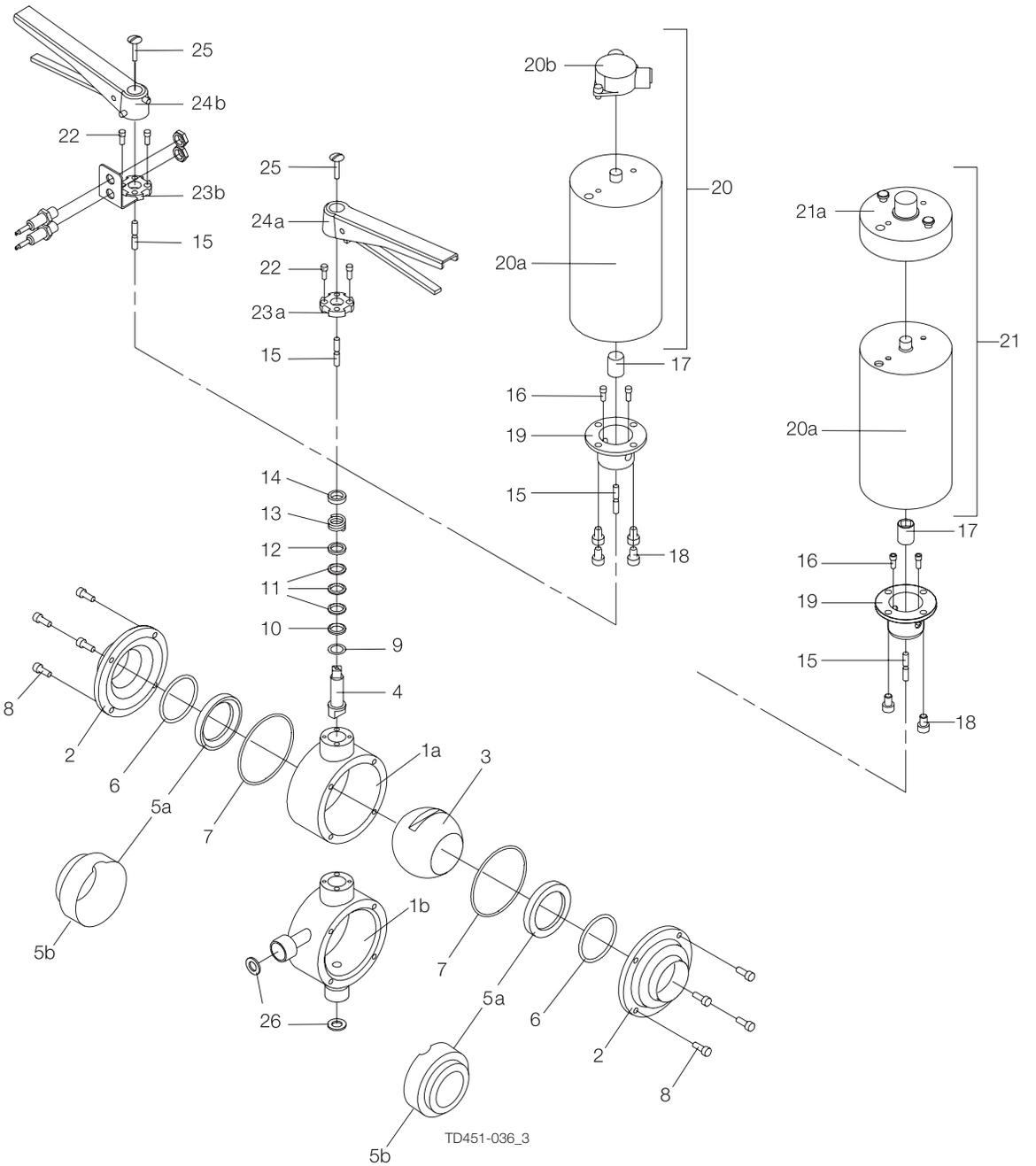
25
24b
22
23b
15
25
24a
22
23a
15
20b
20
20a
17
16
19
15
18
14
13
12
11
10
9
4
8
2
6
5a
7
1a
3
5b
1b
26
7
5a
6
2
8
5b
21a
21
20a
17
16
19
15
18
TD451-036_3

		DN25	DN40	DN50	DN65	DN80	DN100
Service kits for product wetted parts							
□	Service kit, EPDM (std.)	9612647749	9612647757	9612647765	9612647773	9612647781	9612647789
□	Service kit, NBR	9612647750	9612647758	9612647766	9612647774	9612647782	9612647790
□	Service kit, Q	9612647751	9612647759	9612647767	9612647775	9612647783	9612647791
□	Service kit, FPM	9612647752	9612647760	9612647768	9612647776	9612647784	9612647792
Service kits for cavity fillers							
○	Service kit, EPDM (std.)	9612647849	9612647857	9612647865	9612647873	9612647881	9612647889
○	Service kit, NBR	9612647850	9612647858	9612647866	9612647874	9612647882	9612647890
○	Service kit, Q	9612647851	9612647859	9612647867	9612647875	9612647883	9612647891
○	Service kit, FPM	9612647852	9612647860	9612647868	9612647876	9612647884	9612647892

		DN25	DN40	DN50	DN65	DN80	DN100
Service kits for all seals							
♦	Service kit, EPDM (std.) *	9612647753	9612647761	9612647769	9612647777	9612647785	9612647793
♦	Service kit, NBR *	9612647754	9612647762	9612647770	9612647778	9612647786	9612647794
♦	Service kit, Q *	9612647755	9612647763	9612647771	9612647779	9612647787	9612647795
♦	Service kit, FPM *	9612647756	9612647764	9612647772	9612647780	9612647788	9612647796
Service kits for cavity fillers - all seals							
★	Service kit, EPDM (std.) *	9612647853	9612647861	9612647869	9612647877	9612647885	9612647893
★	Service kit, NBR *	9612647854	9612647862	9612647870	9612647878	9612647886	9612647894
★	Service kit, Q *	9612647855	9612647863	9612647871	9612647879	9612647887	9612647895
★	Service kit, FPM *	9612647856	9612647864	9612647872	9612647880	9612647888	9612647896

* Including mounting tool for stem gasket unit
** Not included in service kits

Parts marked with □♦○★ are included in the service kits.
Recommended spare parts: Service kits.

900152/1

Ball Valves, 5308/5309 Series for 1/2” to 2”

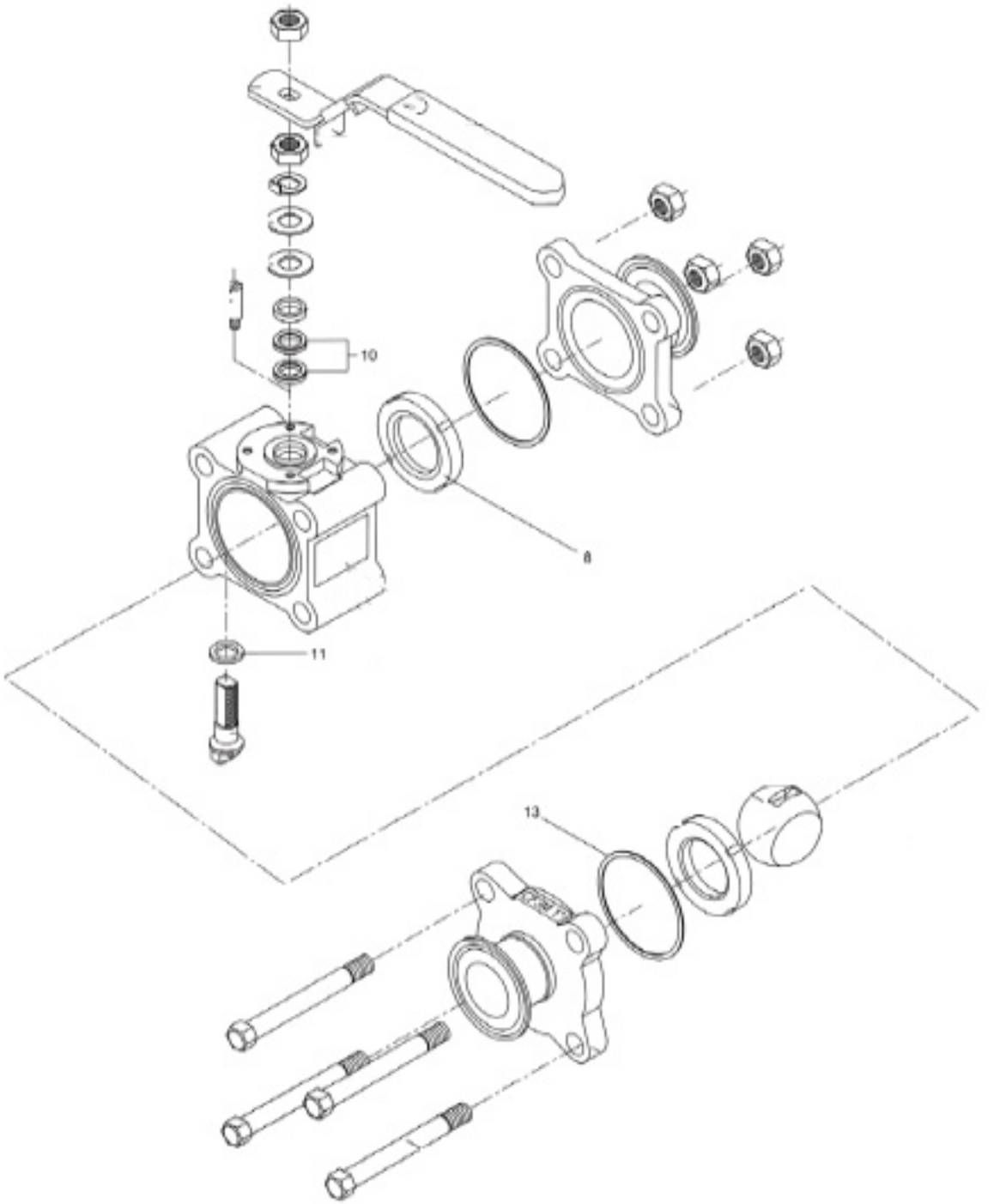

Ball Valve, 5308/5309 Series for 1/2" to 2"

Pos		Qty	Denomination	½”	¾”	1”	1½”	2”
8	□	2	Seat, PTFE					
10	□	2	Stem packing, PTFE					
11	□	1	Stem seal, PTFE					
13	□	2	Joint gasket, PTFE					

Not sold individually. Sold only in kit.

		½”	¾”	1”	1½”	2”
Service Kits for 1/2” to 2”						
□	Service kits, Standard	9613830052	9613830064	9613830048	9613830044	9613830056
□	Service kits, Standard Encapsulated	9613830053	9613830065	9613830049	9613830045	9613830057
□	Service kits, Reinforced	9613830050	9613830062	9613830046	9613830042	9613830054
□	Service kits, Reinforced Encapsulated	9613830051	9613830063	9613830047	9613830043	9613830055

Ball Valves, 5308/5309 Series for 3” and 4”

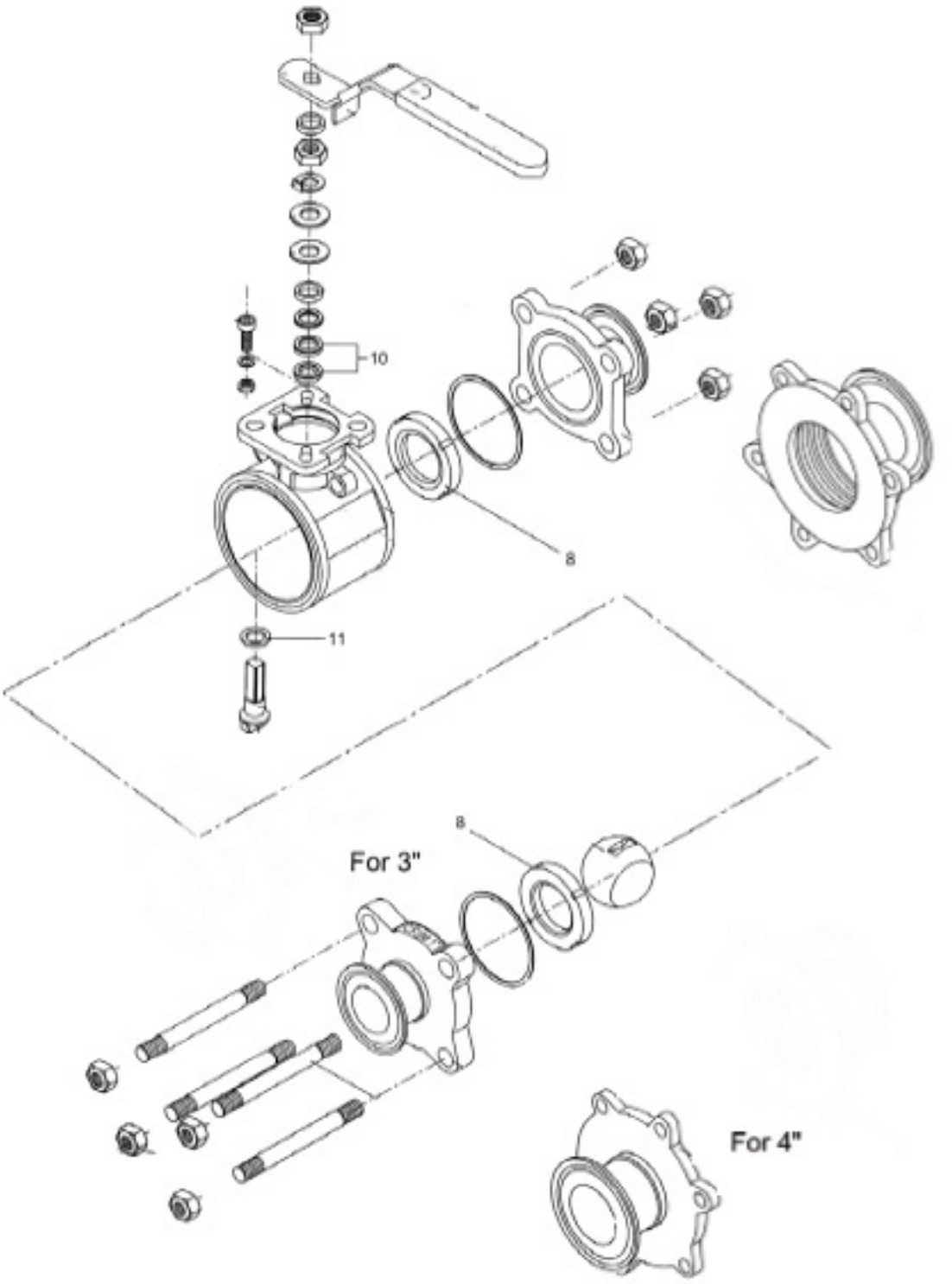

Ball Valves, 5308/5309 Series for 3" and 4"

Pos		Qty	Denomination	3”	4”
8	□	2	Seat, PTFE		
10	□	1	V-ring packing, PTFE, set		
11	□	1	Stem seal, PTFE		
13	□	2	Body gasket, PFTE		

Not sold individually. Sold only in kit.

		3”	4”
Service Kits for 3” and 4”			
□	**Service kits, Standard**	9613830060	9613830068
□	**Service kits, Standard Encapsulated**	9613830061	9613830069
□	**Service kits, Reinforced**	9613830058	9613830066
□	**Service kits, Reinforced Encapsulated**	9613830059	9613830067

Not manufactured anymore

Ball Valves, UltraPure for 2 1/2” to 4”

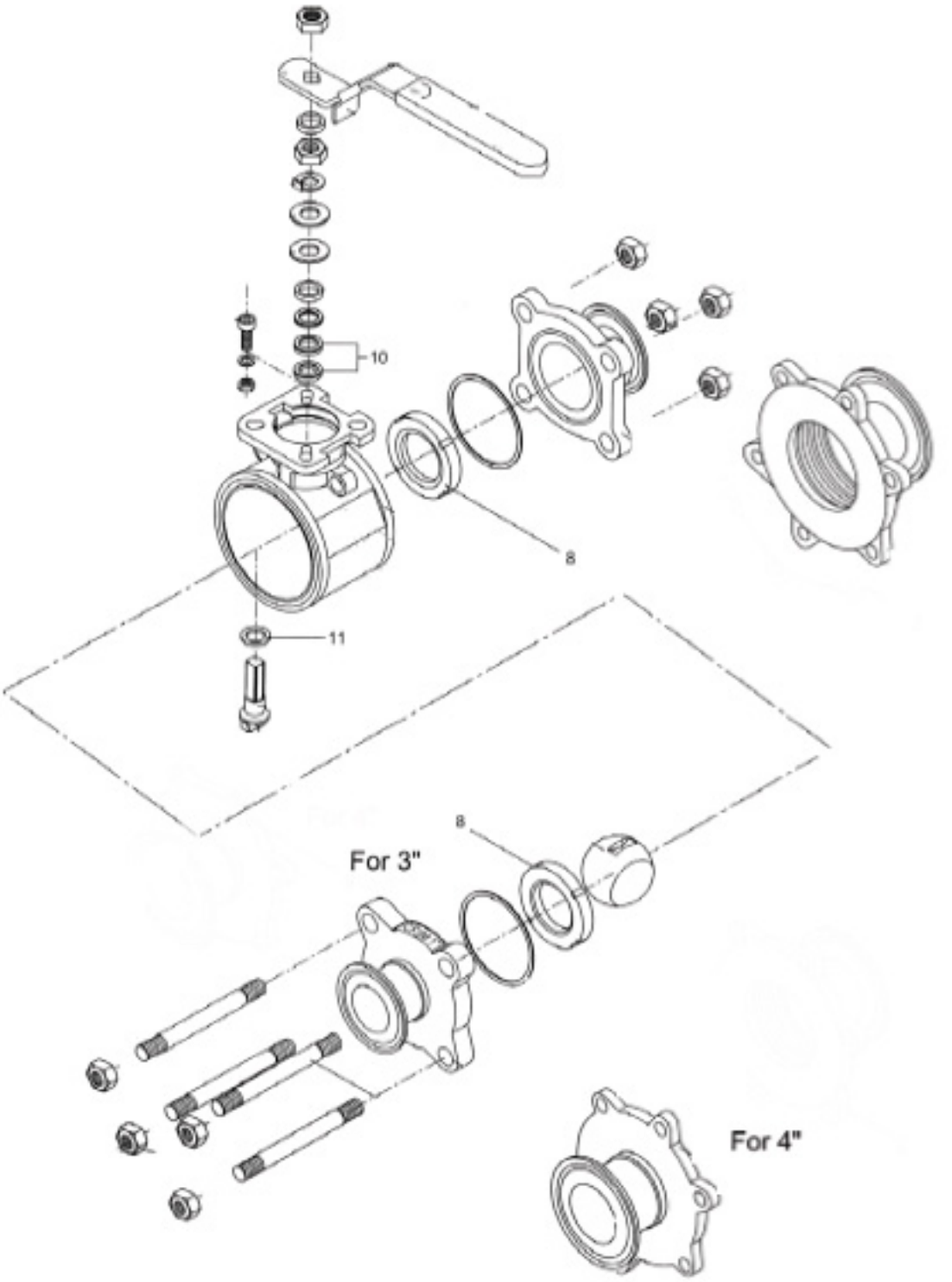

Ball Valves, UltraPure for 2 1/2" to 4"

Pos		Qty	Denomination	2 1/2”	3”	4”
8	□	2	Seat, PTFE			
10	□	1	V-ring packing, PTFE, set			
11	□	1	Stem seal, PTFE			
13	□	2	Body gasket, PFTE			

Not sold individually. Sold only in kit

		2 1/2”	3”	4”
Service Kits for 2 1/2” to 4”				
□	Service kits, ASME	9614051107	9614051108	9614051109
□	Service kits, ISO/DIN	9614051210	9614051211	9614051212

Not manufactured anymore

Ball Valves, UltraPure for 1/2” to 2”

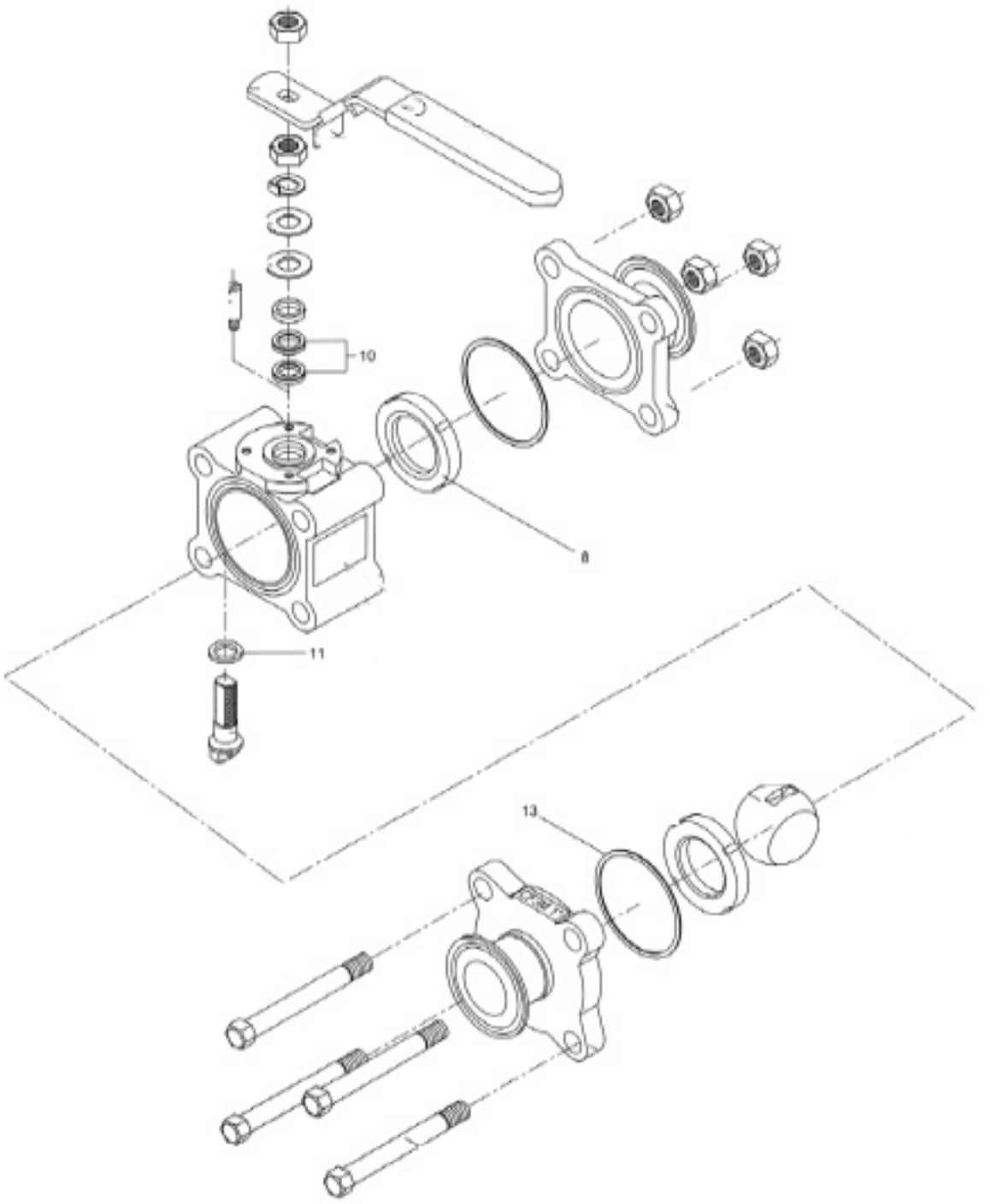

Ball Valve, UltraPure for 1/2" to 2"

Pos		Qty	Denomination	½”	¾”	1”	1½”	2”
8	□	2	Seat, PTFE					
10	□	2	Stem packing, PTFE					
11	□	1	Stem seal, PTFE					
13	□	2	Joint gasket, PTFE					

Not sold individually. Sold only in kit.

		½”	¾”	1”	1½”	2”
Service Kits for 1/2” to 2”						
□	Service kits, ASME	9614051102	9614051103	9614051104	9614051105	9614051106
□	Service kits, ISO/DIN			9614051207	9614051208	9614051209

Not manufactured anymore

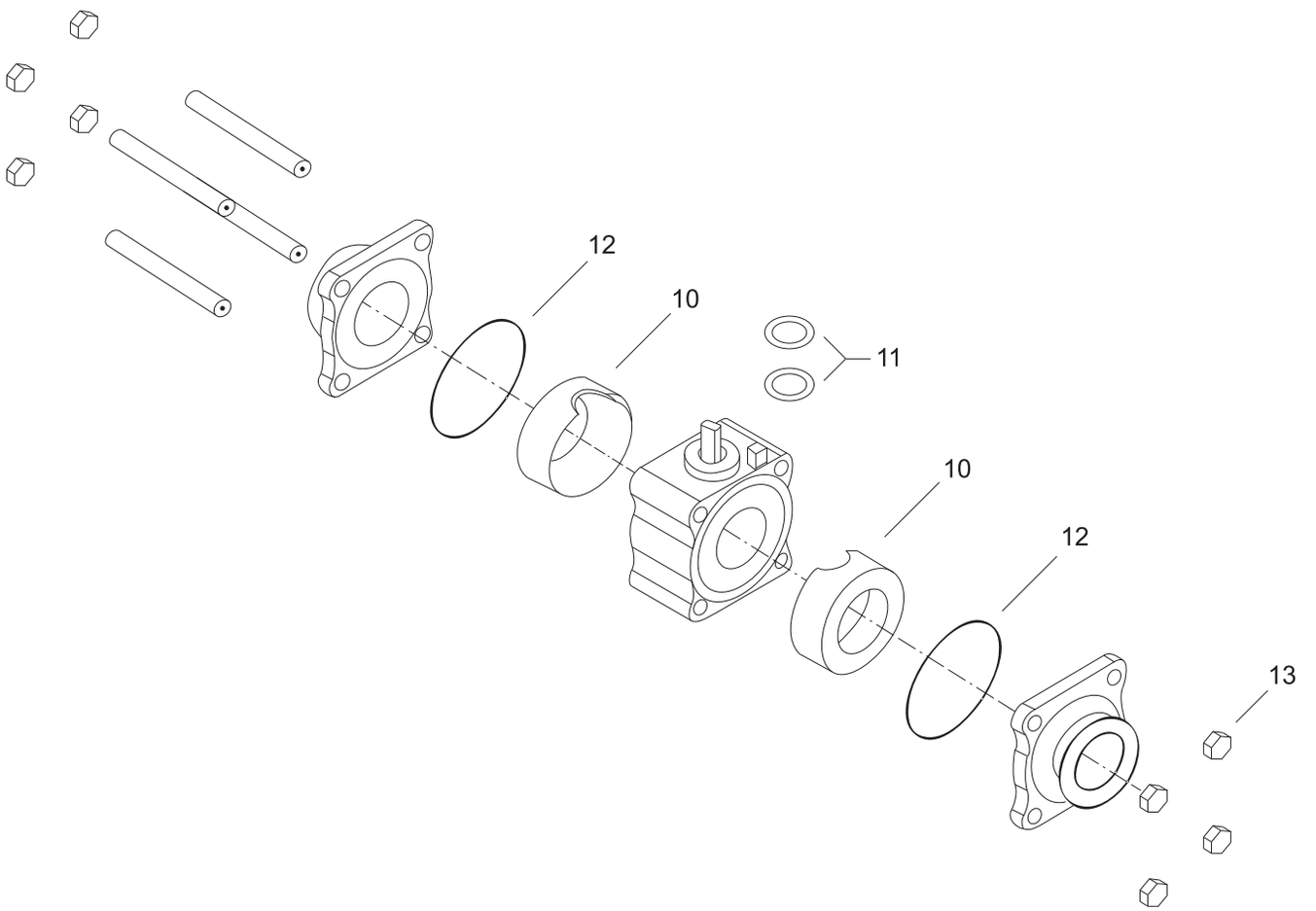

Pos	Qty	Denomination
10 □♦○★	2	Seat Ring
11 □♦○★	2	Stem Washer
12 □♦○★	2	O Ring
13	4	Nut

Parts marked with □♦○★ are included in the service kits.

		1/2”	3/4”	1”	1 1/2”	2”	3”	4”
□	Service Kit PTFE	960015	960016	960121	960122	960123	960139	960140
♦	Service Kit Std. Reinforced	960017	960018	960150	960152	960154	960156	960157
○	Service Kit Encap. PTFE	960038	NA	960124	960125	960126	960141	960142
★	Service Kit Encap. Reinforced	NA	NA	960151	960153	960155	NA	NA

Note: Encap seat rings on larger size valves will be two piece construction, not shown in drawing.

1.3 Butterfly valves

Alfa Laval Butterfly Valves are economical on/off routing valves, available for either automatic or manually operated systems. Due to their large opening areas, these stainless steel valves offer low flow resistance and provide gentle treatment of low and medium viscosity products.



Spare parts

LKB Butterfly Valve, ISO 1.3.44
LKB-2 Butterfly Valve, DIN 1.3.46
LKB-F Butterfly Valve, ISO 1.3.48
LKB-F Butterfly Valve, DIN 1.3.50
LKB UltraPure Butterfly Valve, ISO 1.3.54
LKB UltraPure Butterfly Valve, DIN 1.3.56
LKB UltraPure Butterfly Valve, ASME 1.3.58
i-BFV Butterfly Valve, ISO 1.3.60
i-BFV Butterfly Valve, DIN 1.3.62
i-BFV, handle 1.3.64
Lockable multiposition handle for valve 1.3.66
Handle 1.1 for butterfly valve 1.3.68
Handle 1.1 for indication unit 1.3.70
LKB Butterfly Valve handle G 1.3.72
LKLA actuator, air/spring (NC-NO), ø85 . . . . . 1.3.74
LKLA actuator air/air ø85 . . . . . 1.3.76
LKLA actuator, air/air, DN125-150 ø85 . . . . . 1.3.78
LKLA actuator, air/spring (NC-NO), ø133 . . . . . 1.3.80
LKLA actuator, air/air, ø133 . . . . . 1.3.82
LKLA-T actuator, air/spring (NC-NO), ø85 . . . . . 1.3.84
LKLA-T actuator, air/air, ø85 . . . . . 1.3.86
LKB53-6XXXT Actuator for Green Top (US) 1.3.88
LKLA-T actuator, air/air, DN125-150 ø85 . . . . . 1.3.90
LKLA-T actuator, air/spring (NC-NO), ø133 . . . . . 1.3.92
LKLA-T actuator, air/air, ø133 . . . . . 1.3.94

1.3 Butterfly valves

Alfa Laval Butterfly Valves are economical on/off routing valves, available for either automatic or manually operated systems. Due to their large opening areas, these stainless steel valves offer low flow resistance and provide gentle treatment of low and medium viscosity products.

Unique Control for butterfly valves 1.3.96

Service tools
Unique Control, tool for butterfly valves 1.3.98

Spare parts for obsolete products
LKB Butterfly Valve, ISO (period 7600-8910) 1.3.100
LKB-2 Butterfly Valve, DIN (period 8901-9212) 1.3.102
LKB Low Pressure Butterfly Valve 1.3.104
LKBC-2 Butterfly Valve 1.3.106
LKB-C Farm Valve 1.3.108
LKB, handle 1 . . . . . 1.3.110
LKB, handle NW 150 . . . . . 1.3.112
LKB, handle 2 . . . . . 1.3.114
LKB, air actuator, air/spring, type D80 . . . . . 1.3.116
LKB, air actuator, air/spring, type D96 . . . . . 1.3.118
LKB, air actuator, air/air, type D80 . . . . . 1.3.120
LKB, air actuator, air/air, type D96 . . . . . 1.3.122
CBFV Clamp Butterfly Valve, ISO 1.3.124
CBFV Clamp Butterfly Valve, DIN 1.3.126

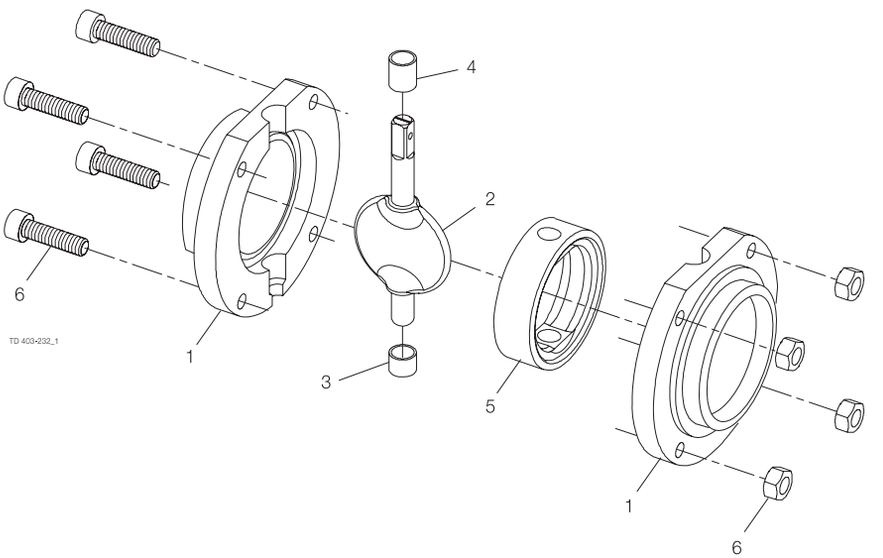
4
2
6
TD 403-232_1
1
3
5
1
6

Pos		Qty	Denomination	25 mm Disc □ 8	38 mm Disc □ 8	51 mm Disc □ 8
1		2	Valve body half, (AISI 304L)	9611443650	9611443220	9611443230
		2	Valve body half, (AISI 316L)	9611443651	9611443221	9611443231
2		1	Disc, (AISI 304)	9611413680	9611411690	9611411770
		1	Disc, (AISI 316L)	9611413681	9611411691	9611411771
		1	Disc, 12 (AISI 304)			
		1	Disc, 12 (AISI 316L)			
3	□	1	Bush			
		1	Bush, set (10 pcs.)	9614464002	9614464001	9614464002
4	□	1	Bush			
		1	Bush, set (10 pcs.)	9614464007	9614464001	9614464002
5	□	1	Seal ring, (EPDM)			
		1	Seal ring, (Silicone Q)			
		1	Seal ring, (Viton FPM)			
		1	Seal ring, (HNBR)			
		1	Seal ring, (PFA)			
6		1	Set of screws, M6 + Nut M6	9611417340	9611417340	
		1	Set of screws, M8 + Nut M8			9611417350

Pos		Qty	Denomination	63.5 mm Disc □ 8	76 mm Disc □ 10	101.6 mm *) Disc □ 10	101.6 mm 152 mm Disc □ 12
1		2	Valve body half, (AISI 304L)	9611443240	9611443070	9611413250	9611413250
		2	Valve body half, (AISI 316L)	9611443241	9611443071	9611413251	9611413251
2		1	Disc, (AISI 304)	9611411850	9611411930		
		1	Disc, (AISI 316L)	9611411851	9611411931		
		1	Disc, 12 (AISI 304)				9612046301
		1	Disc, 12 (AISI 316L)				9612046302
		1	Disc, 10 (AISI 316)				
3	□	1	Bush				
		1	Bush, set (10 pcs.)	9614464003	9614464004	9614464006	9614464006
4	□	1	Bush				
		1	Bush, set (10 pcs.)	9614464003	9614464004	9614464005	9614464005
5	□	1	Seal ring, (EPDM)				
		1	Seal ring, (Silicone Q)				
		1	Seal ring, (Viton FPM)				
		1	Seal ring, (HNBR)				
		1	Seal ring, (PFA)				
6		1	Set of screws, M8 + Nut M8	9611417350	9611417360		
		1	Set of screws, M10 + Nut M10			9611417370	9611417370

		25 mm Disc □ 8	38 mm Disc □ 8	51 mm Disc □ 8	63.5 mm Disc □ 8
Service kits for product wetted parts					
□	**Service kit EPDM**	9611923028	9611923029	9611923030	9611923031
□	**Service kit Q**	9611923034	9611923035	9611923036	9611923037
□	**Service kit FPM**	9611923040	9611923041	9611923042	9611923043
□	**Service kit HNBR**	9611923160	9611923161	9611923162	9611923163
□	**Service kit PFA**		9611923183	9611923184	9611923185

		76mm Disc □ 10	101.6mm Disc □ 10	101.6mm Disc □ 12	152mm Disc □ 15
Service kits for product wetted parts					
□	**Service kit EPDM**	9611923032	9611923033	9611923033	9611923046
□	**Service kit Q**	9611923038	9611923039	9611923039	9611923047
□	**Service kit FPM**	9611923044	9611923045	9611923045	9611923048
□	**Service kit HNBR**	9611923164	9611923165	9611923165	9611923197
□	**Service kit PFA**	9611923186	9611923187	9611923187	

NB: * Disc connection □ 10 for 101.6 mm and DN100 is no longer available. Please rebuild the air actuator or/and handle to: disc connection □ 12
Reg. 2.14.1 9805 / Intro. 8001
NOTE! Lubricate the pin holes in the seal (5) with Klüber Paraliq GTE 703 or similar. Very important for Q and FPM.
Parts marked with □ are included in the service kits. Recommended spare parts: Service kits.

900069/4

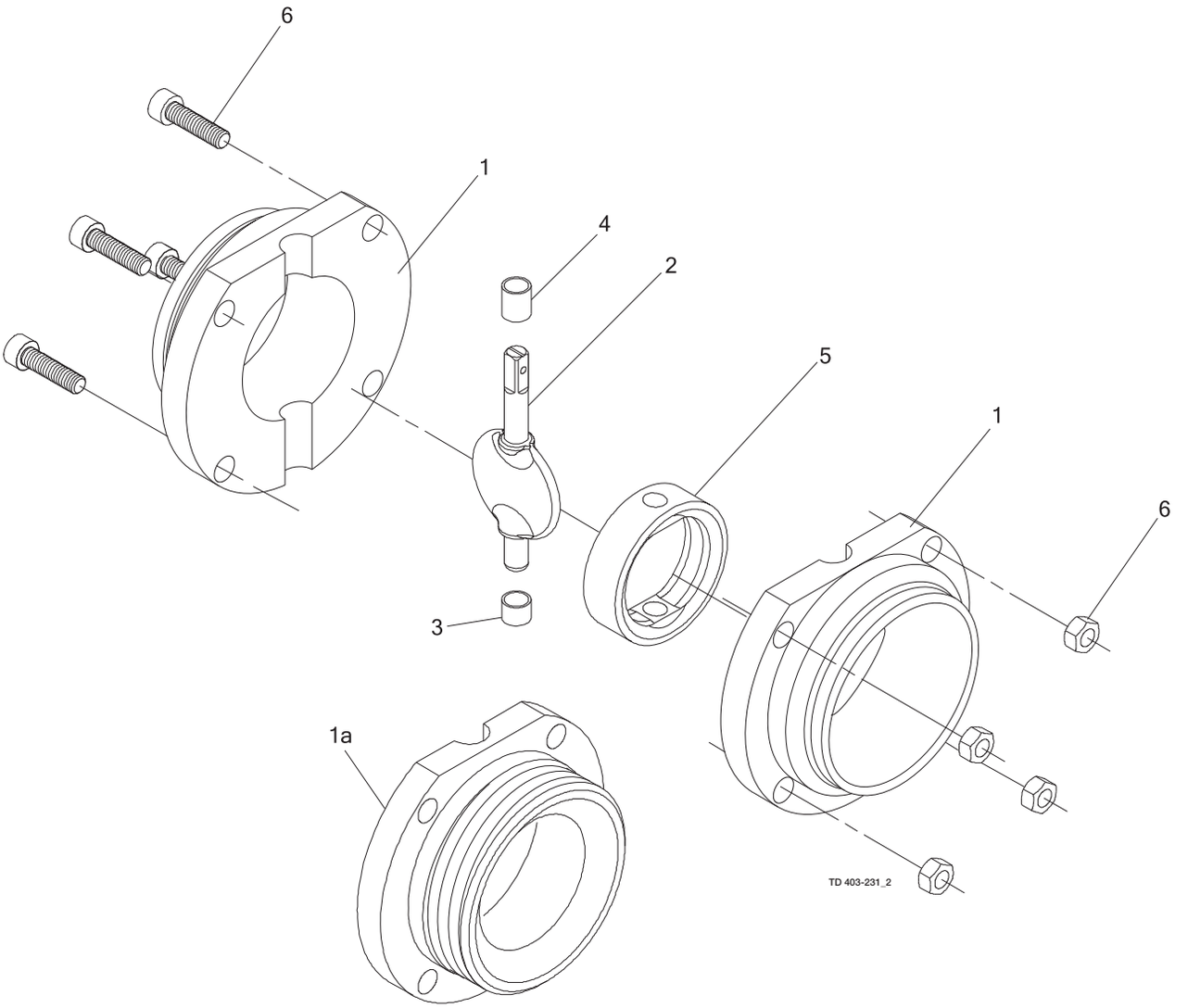
6
1
4
2
5
1
6
3
1a
TD 403-231_2

For valves with bushes (Period 9301-)

Pos		Qty	Denomination	DN 25 Disc □ 8	DN 32 Disc □ 8	DN 40 Disc □ 8	DN 50 Disc □ 8
1		2	Valve body half, welding (AISI 304L)	9612323601	9612323701	9612323801	9612323901
		2	Valve body half, welding (AISI 316 L)	9612323602	9612323702	9612323802	9612323902
1a		2	Valve body half, male part (AISI 304L)	9612324301	9612324401	9612324501	9612324601
		2	Valve body half, male part (AISI 316 L)	9612324302	9612324402	9612324502	9612324602
2		1	Disc , (AISI 304)	9612073605	9612073705	9612073805	9612073905
		1	Disc , (AISI 316L)	9612073604	9612073704	9612073804	9612073904
3	□	1	Bush				
		1	Bush, set (10 pcs.)	9614464002	9614464002	9614464002	9614464003
4	□	1	Bush				
		1	Bush, set (10 pcs.)	9614464002	9614464002	9614464002	9614464003
5	□	1	Seal ring, (EPDM)				
		1	Seal ring, (Silicone Q)				
		1	Seal ring, (FPM)				
		1	Seal ring, (HNBR)				
			Seal ring, (PFA)				
6		1	Set screw, M6 + Nut M6	9611417340	9611417340	9611417340	
		1	Set screw, M8 + Nut M8				9611417350

Pos		Qty	Denomination	DN 65 Disc □ 10	DN 80 Disc □ 10	DN 100 Disc □ 12	DN 125 DN150 Disc □ 14
1		2	Valve body half, welding (AISI 304L)	9612324001	9612324101	9612324201	9612077401
		2	Valve body half, welding (AISI 316 L)	9612324002	9612324102	9612324202	9612077402
1a		2	Valve body half , male part (AISI 304L)	9612324701	9612324801	9612324901	9612077201
		2	Valve body half, male part (AISI 316 L)	9612324702	9612324802	9612324902	9612077202
2		1	Disc , (AISI 304)	9612074005	9612074105	9612074205	9612076905
		1	Disc , (AISI 316L)	9612074004	9612074104	9612074204	9612076904
3	□	1	Bush				
		1	Bush, set (10 pcs.)	9614464003	9614464003	9614464004	9614464008
4	□	1	Bush				
		1	Bush, set (10 pcs.)	9614464003	9614464003	9614464004	9614464008
5	□	1	Seal ring, (EPDM)				
		1	Seal ring, (Silicone Q)				
		1	Seal ring, (FPM)				
		1	Seal ring, (HNBR)				
			Seal ring, (PFA)				
6		1	Set screw, M8 + Nut M8	9611417360	9611417360		
		1	Set screw, M10 + Nut M10			9611417370	
		1	Set screw, M10 + Nut M10 (6pcs)				9611417770

Service kits for product wetted parts

		DN25 Disc □ 8	DN32 Disc □ 8	DN40 Disc □ 8	DN50 Disc □ 8
□	Service kit, EPDM	9611923075	9611923076	9611923077	9611923078
□	Service kit, Q	9611923083	9611923084	9611923085	9611923086
□	Service kit, FPM	9611923091	9611923092	9611923093	9611923094
□	Service kit, HNBR	9611923210	9611923211	9611923212	9611923213
□	Service kit, PFA			9611923191[1)]	9611923192

Service kits for product wetted parts

		DN65 Disc □ 10	DN80 Disc □ 10	DN100 Disc □ 12	DN125 Disc □ 14	DN 150
□	Service kit, EPDM	9611923079	9611923080	9611923081	9611923082	9611923046
□	Service kit, Q	9611923087	9611923088	9611923089	9611923090	9611923047
□	Service kit, FPM	9611923095	9611923096	9611923097	9611923098	9611923048
□	Service kit, HNBR	9611923214	9611923215	9611923216	9611923217	9611923197
□	Service kit, PFA	9611923193	9611923194	9611923195		

NB:[1)] In the service kit the seal ring is delivered assembled with disc.

NOTE!! Lubricate the pin holes in the seal (5) with Klüber Paraliq GTE 703 or similar. Very important for Q and FPM.

Parts marked with □ are included in the service kits. Recommended spare parts: Service kits.

900245/4

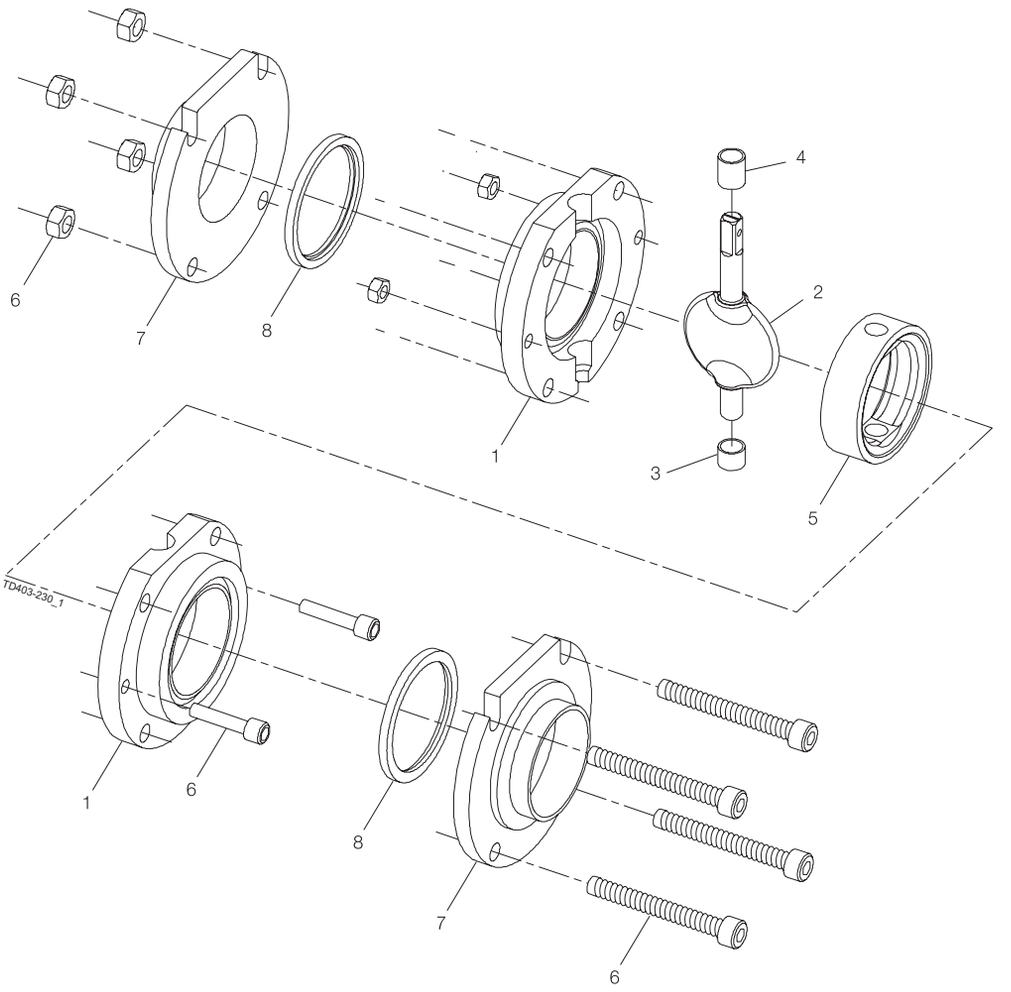
6
7
8
1
4
2
3
5
TD403-230_1
1
6
8
7
6

LKB-F ISO

Pos		Qty	Denomination	25 mm Disc □ 8	38 mm Disc □ 8	51 mm Disc □ 8	63.5 mm Disc □ 8	76 mm Disc □ 10	101.6 mm Disc □ 12
1		2	Valve body half , (AISI 316 L)	9612402410	9612402411	9612402412	9612402413	9612402414	9612402415
		2	Valve body half , (AISI 304L)						
2		1	Disc, (AISI 304)	9611413680	9611411690	9611411770	9611411850	9611411930	9612046301
		1	Disc , (AISI 316L)	9611413681	9611411691	9611411771	9611411851	9611411931	9612046302
3	□	1	Bush						
		1	Bush set (10 pcs.)	9614464002	9614464001	9614464002	9614464003	9614464004	9614464006
4	□	1	Bush						
		1	Bush set (10 pcs.)	9614464002	9614464001	9614464002	9614464003	9614464004	9614464006
5	□	1	Seal ring, (EPDM)						
		1	Seal ring, (Silicone Q)						
		1	Seal ring, (FPM)						
		1	Seal ring, (HNBR)						
		1	Seal ring, (PFA on EPDM)						
6		1	Set of screws and nuts	9612400101	9612400101				
		1	Set of screws and nuts			9612400102	9612400102		
		1	Set of screws and nuts					9612400103	
		1	Set of screws and nuts						9612400104
7		2	Flange, (AISI 316L)	9612402510	9612402511	9612402512	9612402513	9612402514	9612402515
		2	Flange, (AISI 304L)						
8	□	2	Seal ring, (EPDM)						
		2	Seal ring, (Silicone Q)						
		2	Seal ring, (FPM)						
		2	Seal ring, (HNBR)						

	25 mm Disc □ 8	38 mm Disc □ 8	51 mm Disc □ 8	63.5 mm Disc □ 8	76 mm Disc □ 10	101.6 mm Disc □ 12
Service kits for product wetted parts						
□ Service kit, EPDM	9611923058	9611923059	9611923060	9611923061	9611923062	9611923063
□ Service kit, Silicone (Q)	9611923064	9611923065	9611923066	9611923067	9611923068	9611923069
□ Service kit, FPM	9611923070	9611923071	9611923072	9611923073	9611923074	9611923099
□ Service kit, HNBR	9611923310	9611923311	9611923312	9611923313	9611923314	9611923315
□ Service kit, PFA**						

Parts marked with □ are included in the service kits.
Recommended spare parts: Service kits.

NB:
* Disc connection □ 10 for 101.6 mm and DN 100 is no longer available. Please rebuild the air-actuator or/and handle to: disc connection □ 12
** Service kits for PFA are delivered with EPDM flange seals.

900529/4

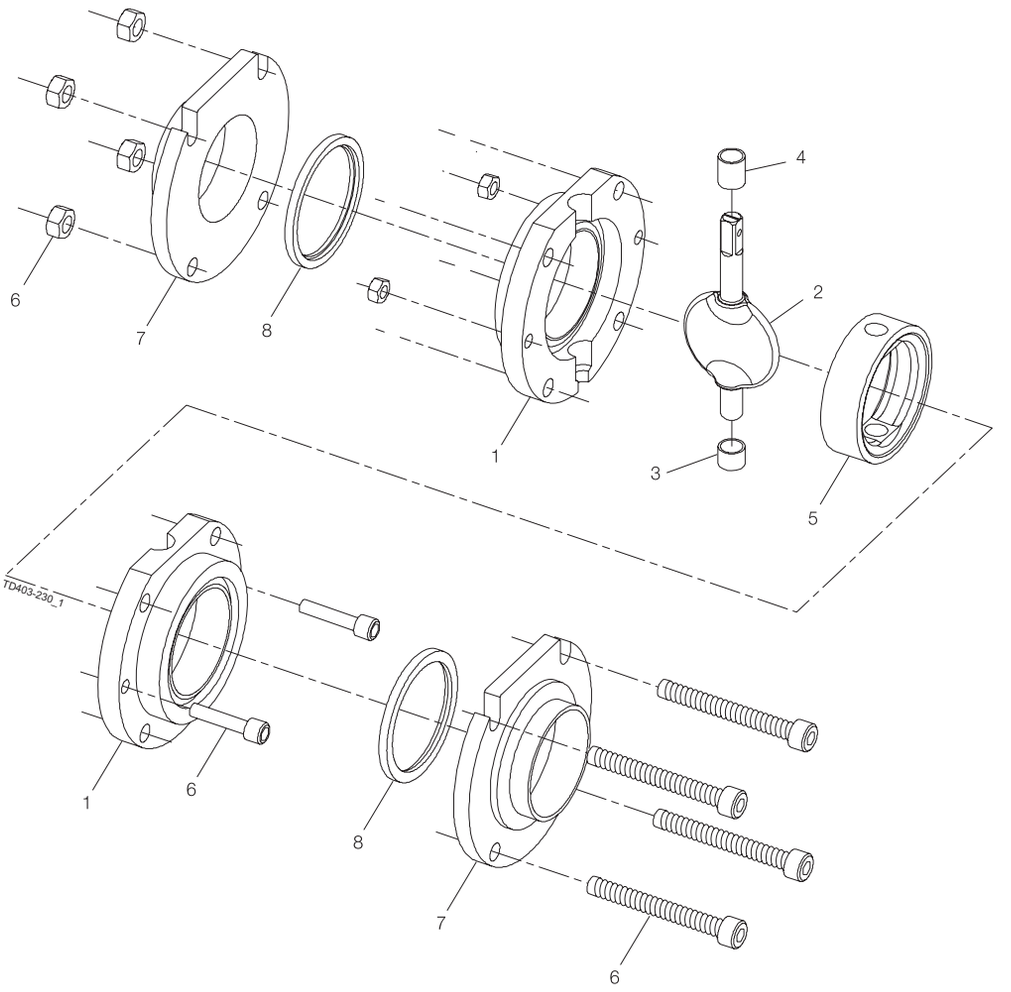
4
2
6
7
8
1
3
5
TD403-230_1
1
6
8
7
6

LKB-F DIN

Pos		Qty	Denomination	DN 25 Disc □ 8	DN 32 Disc □ 8	DN 40 Disc □ 8	DN 50 Disc □ 8
1		2	Valve body half, (AISI 316 L)	9612402401	9612402402	9612402403	9612402404
		2	Valve body half, (AISI 304)				
2		1	Disc, (AISI 316L)	9612073604	9612073704	9612073804	9612073904
3	□	1	Bush				
		1	Bush set (10 pcs.)	9614464002	9614464002	9614464002	9614464003
4	□	1	Bush				
		1	Bush set (10 pcs.)	9614464002	9614464002	9614464002	9614464003
5	□	1	Seal ring, (EPDM)				
		1	Seal ring, (Silicone Q)				
		1	Seal ring, (FPM)				
		1	Seal ring, (PFA on EPDM)				
		1	Seal ring, (HNBR)				
6		1	Set of screws and nuts	9612400101	9612400101	9612400101	
		1	Set of screws and nuts				9612400102
7		2	Flange, (AISI 316L)	9612402501	9612402502	9612402503	9612402504
		2	Flange, (AISI 304L)				
8	□	2	Seal ring, (EPDM)				
		2	Seal ring, (Silicone, Q)				
		2	Seal ring, (FPM)				

Pos		Qty	Denomination	DN 65 Disc □ 10	DN 80 Disc □ 10	DN 100 Disc □ 12	DN 125 Disc □ 14	DN150 Disc □ 15
1		2	Valve body half, welding (AISI 316 L)	9612402405	9612402406	9612402407	9612402408	9612402409
		2	Valve body half, welding (AISI 304L)					
2		1	Disc, (AISI 316L)	9612074004	9612074104	9612074204	9612076904	9611413701
3	□	1	Bush					
		1	Bush set (10 pcs)	9614464003	9614464003	9614464003	9614464008	9614464009
4	□	1	Bush					
3		1	Bush set (10 pcs)	9614464003	9614464003	9614464004	9614464008	9614464009
5	□	1	Seal ring, (EPDM)					
		1	Seal ring, (Silicone Q)					
		1	Seal ring (FPM),					
		1	Seal ring, (PFA on EPDM)					
		1	Seal ring, (HNBR)					
6		1	Set of screws and nuts	9612400103	9612400103			
		1	Set of screws and nuts			9612400104		
		1	Set of screws and nuts				9612400105	
		1	Set of screws and nuts					9612400106
7		2	Flange, (AISI 316L)	9612402505	9612402506	9612402507	9612402508	9612402509
		2	Flange, (AISI 304L)					
8	□	2	Seal ring, (EPDM)					
		2	Seal ring, (Silicone, Q)					
		2	Seal ring, (FPM)					

Service kits for product wetted parts

		DN 25 Disc □ 8	DN 32 Disc □ 8	DN 40 Disc □ 8	DN 50 Disc □ 8
□	Service kit, EPDM	9611923100	9611923101	9611923102	9611923103
□	Service kit, Silicone (Q)	9611923109	9611923110	9611923111	9611923112
□	Service kit, FPM	9611923118	9611923119	9611923120	9611923121
	Service kit, HNBR	8010019278	8010019279	8010019280	8010019287
	Service kit, PFA				

		DN 65 Disc □ 10	DN 80 Disc □ 10	DN 100 Disc □ 12	DN 125 Disc □ 14	DN 150 Disc □ 15
□	Service kit, EPDM	9611923104	9611923105	9611923106	9611923107	9611923108
□	Service kit, Silicone (Q)	9611923113	9611923114	9611923115	9611923116	9611923117
□	Service kit, FPM	9611923122	9611923123	9611923124	9611923125	9611923126
	Service kit, HNBR	8010019288	8010019289	8010019290	8010019291	8010020039
	Service kit, PFA					

Parts marked with □ are included in the service kits.
Recommended spare parts: Service kits.

[1]) Seal ring is delivered assembled with disc.

NB: * Service kits for HNBR and PFA are delivered with EPDM flange seals.

900529/6

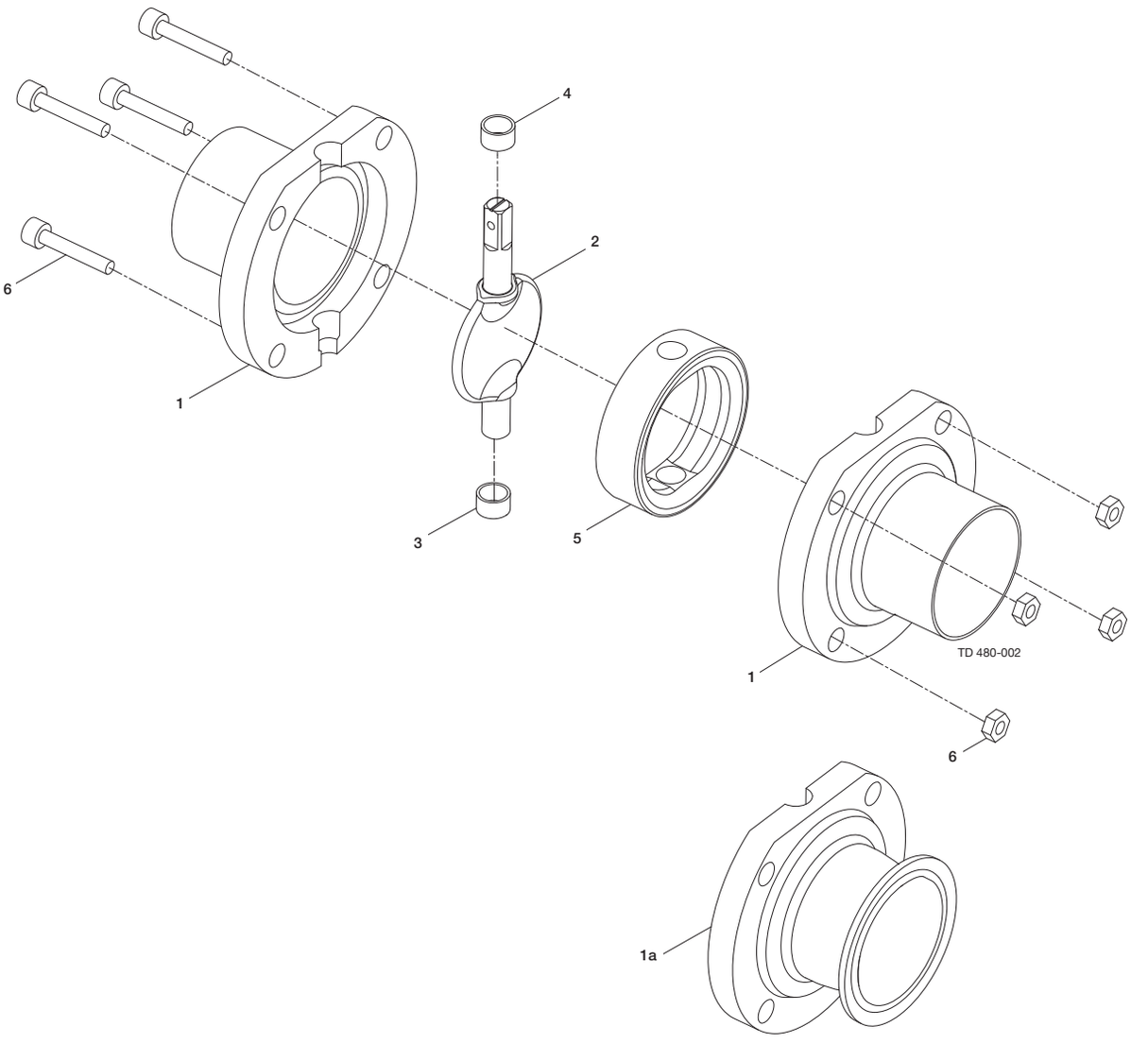
4
2
6
1
3
5
1
6
TD 480-002
1a

Pos		Qty	Denomination	25 mm Disc □ 8	38 mm Disc □ 8	51 mm Disc □ 8	63.5 mm Disc □ 8	76.1 mm Disc □ 10	101.6 mm Disc □ 12
1		2	Valve body half, welding ends						
1a		2	Valve body half, clamp ferrule						
2		1	Disc	9614058101	9614058102	9614058103	9614058104	9614058105	9614058106
3	▲	1	Bush						
			Bush, set (10 pcs)	9614464002	9614464001	9614464002	9614464003	9614464004	9614464006
4	▲	1	Bush						
			Bush, set (10 pcs)	9614464002	9614464001	9614464002	9614464003	9614464004	9614464005
5	▲	1	Seal ring, EPDM						
	▲	1	Seal ring, FPM						
	▲	1	Seal ring, HNBR						
	▲	1	Seal ring, Silicone Q						
	▲	1	Seal ring, PFA						
6		1	Set screw + nut, M6	9611417340	9611417340				
		1	Set screw + nut, M8			9611417350	9611417350	9611417360	
		1	Set screw + nut, M10						9611417370
	▲		Alfa Laval Q-doc service kit						

		25 mm Disc □ 8	38 mm Disc □ 8	51 mm Disc □ 8	63.5 mm Disc □ 8	76.1 mm Disc □ 10	101.6 mm Disc □ 12

Service kits

▲	Service kit, EPDM	9611923284	9611923285	9611923286	9611923287	9611923288	9611923289
▲	Service kit, FPM	9611923297	9611923298	9611923299	9611923300	9611923301	9611923302
▲	Service kit, HNBR	9611923346	9611923347	9611923348	9611923349	9611923350	9611923351
▲	Service kit, Q (silicone)	9611923352	9611923353	9611923354	9611923355	9611923356	9611923357
▲	Service kit, PFA		9611923358	9611923359	9611923360	9611923361	9611923362

Parts marked with ▲ are included in the service kit.
Recommended spare parts: Service kit.

NOTE!!
Lubricate the pin holes in the seal (5) with Klüber Paraliq GTE 703 or similar.
Very important for Q and FPM.

900581/3

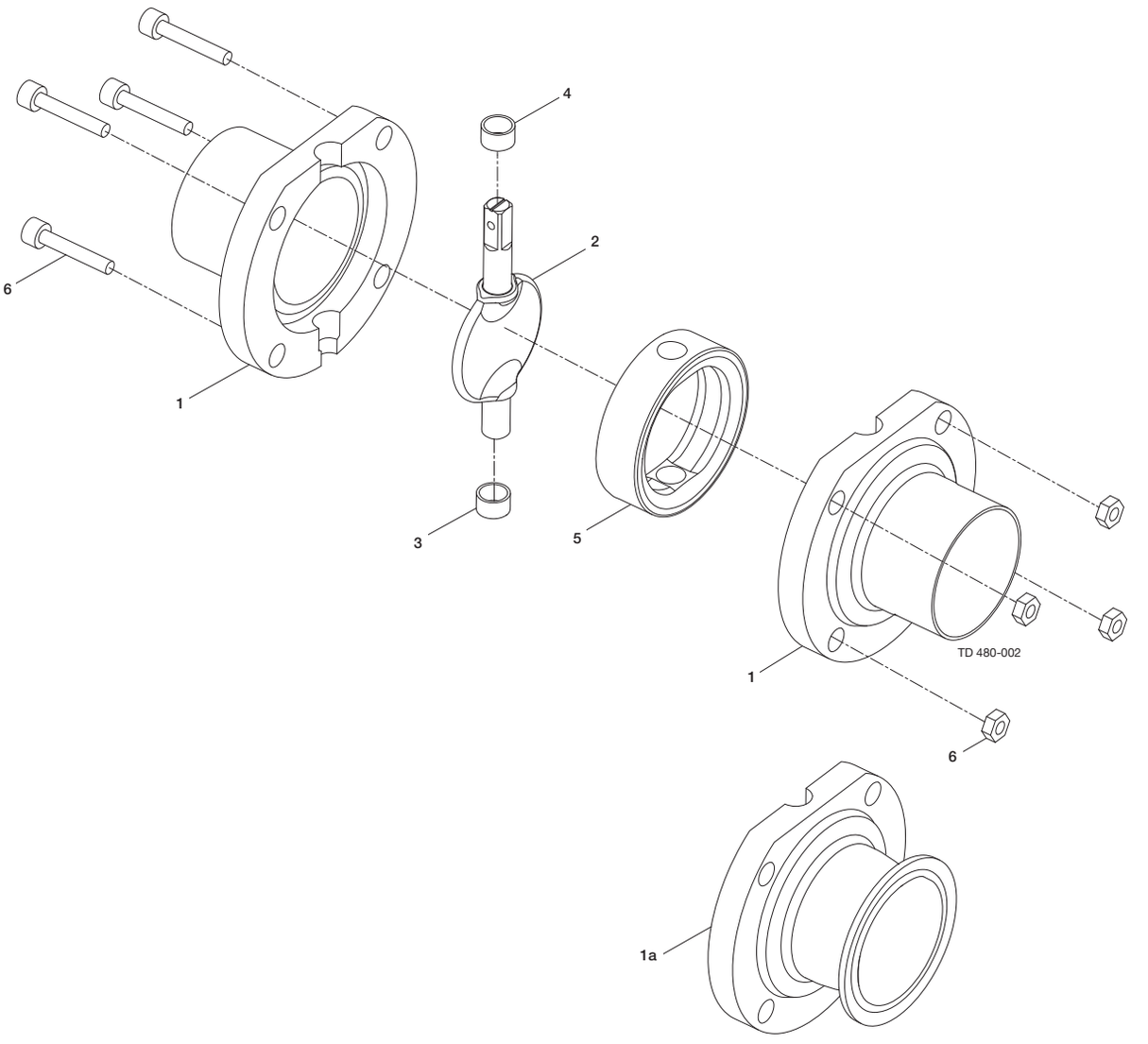
4
2
6
1
3
5
1
6
TD 480-002
1a

Pos		Qty	Denomination	DN 25 Disc □ 8	DN 32 Disc □ 8	DN 40 Disc □ 8	DN 50 Disc □ 8
1		2	Valve body half, welding ends				
1a		2	Valve body half, clamp ferrule				
2		1	Disc	9614058113	9614058114	9614058115	9614058116
3	▲	1	Bush				
			Bush, set (10 pcs)	9614464002	9614464002	9614464002	9614464003
4	▲	1	Bush				
		1	Bush, set (10 pcs)	9614464002	9614464002	9614464002	9614464003
5	▲	1	Seal ring, EPDM				
	▲	1	Seal ring, FPM				
	▲	1	Seal ring, HNBR				
	▲	1	Seal ring, Silicone Q				
	▲	1	Seal ring, PFA				
6		1	Set screw + nut, M6	9611417340	9611417340	9611417340	
		1	Set screw + nut, M8				9611417350
		1	Alfa Laval Q-doc service kit				

Pos		Qty	Denomination	DN 65 Disc □ 10	DN 80 Disc □ 10	DN 100 Disc □ 12
1		2	Valve body half, welding ends			
1a		2	Valve body half, clamp ferrule			
2		1	Disc	9614058117	9614058118	9614058119
3	▲	1	Bush			
			Bush, set (10 pcs)	9614464003	9614464003	9614464004
4	▲	1	Bush			
			Bush, set (10 pcs)	9614464003	9614464003	9614464004
5	▲	1	Seal ring, EPDM			
	▲	1	Seal ring, FPM			
	▲	1	Seal ring, HNBR			
	▲	1	Seal ring, Silicone Q			
	▲	1	Seal ring, PFA			
6		1	Set screw + nut, M8	9611417360	9611417360	
		1	Set screw + nut, M10			9611417370
		1	Alfa Laval Q-doc service kit			

		DN 25 Disc □ 8	DN 32 Disc □ 8	DN 40 Disc □ 8	DN 50 Disc □ 8
Service kits					
▲	**Service kit, EPDM**	9611923290	9611923291	9611923292	9611923293
▲	**Service kit, FPM**	9611923303	9611923304	9611923305	9611923306
▲	**Service kit, HNBR**	9611923325	9611923326	9611923327	9611923328
▲	**Service kit, Q (silikone)**	9611923332	9611923333	9611923334	9611923335
▲	**Service kit, PFA**			9611923339	9611923340

		DN 65 Disc □ 10	DN 80 Disc □ 10	DN 100 Disc □ 12
Service kits				
▲	**Service kit, EPDM**	9611923294	9611923295	9611923296
▲	**Service kit, FPM**	9611923307	9611923308	9611923309
▲	**Service kit, HNBR**	9611923329	9611923330	9611923331
▲	**Service kit, Q (silikone)**	9611923336	9611923337	9611923338
▲	**Service kit, PFA**	9611923341	9611923342	9611923343

Parts marked with ▲ are included in the service kit.
Recommended spare parts: Service kit.

NOTE!!
Lubricate the pin holes in the seal (5) with Klüber Paraliq GTE 703 or similar.
Very important for Q and FPM.

900582/3

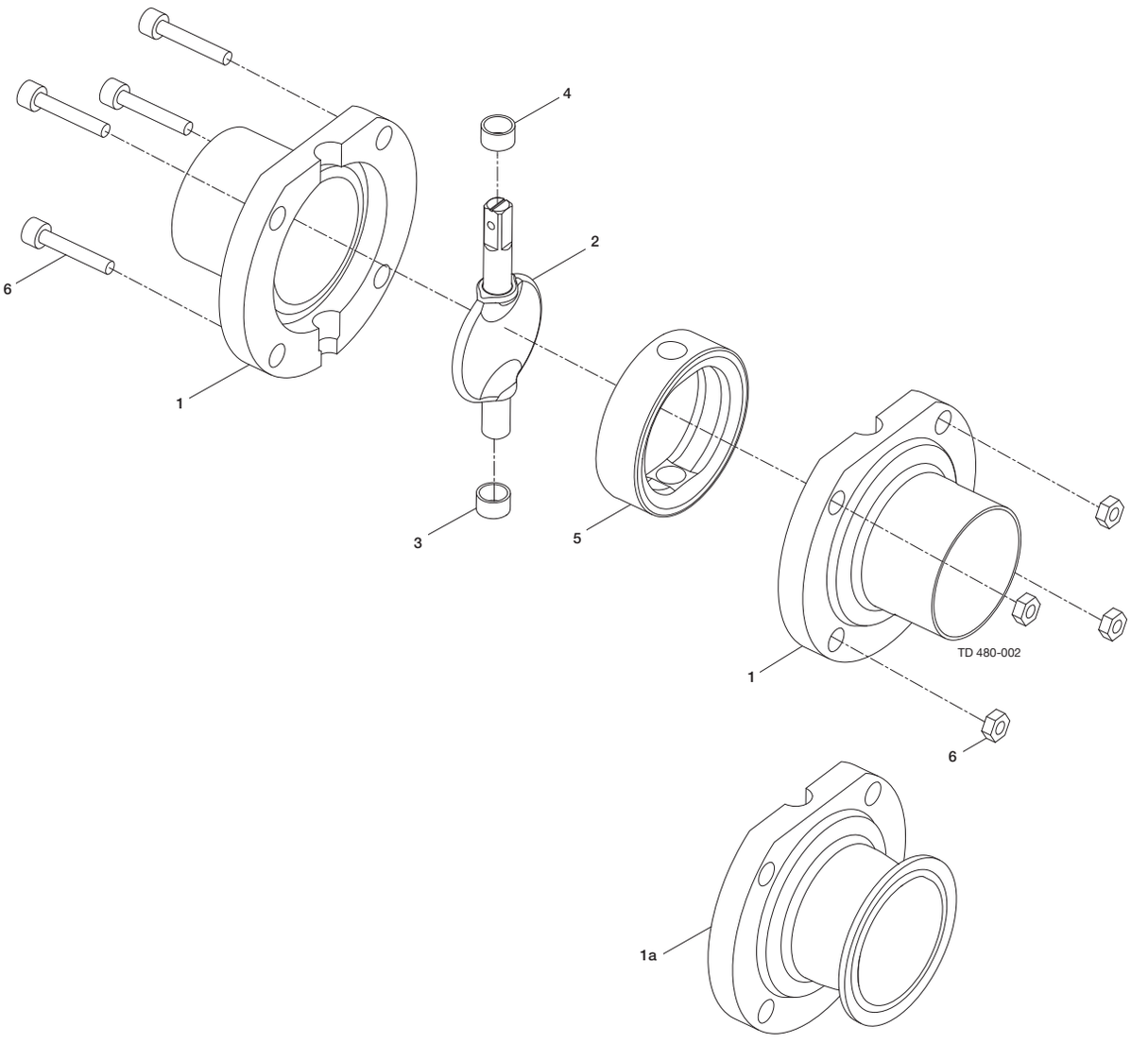
4
2
6
1
3
5
TD 480-002
1
6
1a

Pos		Qty	Denomination	25 mm Disc □ 8	38 mm Disc □ 8	51 mm Disc □ 8	63.5 mm Disc □ 8	76 mm Disc □ 10	101.6 mm Disc □ 12
RA 0.5									
1		2	Valve body half, welding ends						
1a		2	Valve body half, clamp ferrule						
2		1	Disc	9614058101	9614058102	9614058103	9614058104	9614058105	9614058106
3	▲	1	Bush						
3			Bush, set (10 pcs)	9614464002	9614464001	9614464002	9614464003	9614464004	9614464006
4	▲	1	Bush						
4		1	Bush, set (10 pcs)	9614464002	9614464001	9614464002	9614464003	9614464004	9614464005
5	▲	1	Seal ring, EPDM						
5	▲	1	Seal ring, FPM						
	▲	1	Seal ring, HNBR						
	▲	1	Seal ring, Silicone Q						
	▲	1	Seal ring, PFA						

Pos		Qty	Denomination	25 mm Disc □ 8	38 mm Disc □ 8	51 mm Disc □ 8	63.5 mm Disc □ 8	76 mm Disc □ 10	101.6 mm Disc □ 12
RA 0.38									
1		2	Valve body half, welding ends						
1a		2	Valve body half, clamp ferrule						
2		1	Disc	9614058107	9614058108	9614058109	9614058110	9614058111	9614058112
3	▲	1	Bush						
3			Bush, set (10 pcs)	9614464002	9614464001	9614464002	9614464003	9614464004	9614464006
4	▲	1	Bush						
4			Bush, set (10 pcs)	9614464002	9614464001	9614464002	9614464003	9614464004	9614464005
5	▲	1	Seal ring, EPDM						
5	▲	1	Seal ring, FPM						
	▲	1	Seal ring, HNBR						
	▲	1	Seal ring, Silicone Q						
	▲	1	Seal ring, PFA						
6		1	Set screw + nut, M6	9611417340	9611417340				
	▲	1	Set screw + nut, M8			9611417350	9611417350	9611417360	
	▲	1	Set screw + nut, M10						9611417370
		1	Alfa Laval Q-doc service kit						

		25 mm Disc □ 8	38 mm Disc □ 8	51 mm Disc □ 8	63.5 mm Disc □ 8	76 mm Disc □ 10	101.6 mm Disc □ 12
Service kits							
▲	Service kit, EPDM	9611923284	9611923285	9611923286	9611923287	9611923288	9611923289
▲	Service kit, FPM	9611923297	9611923298	9611923299	9611923300	9611923301	9611923302
▲	Service kit, HNBR	9611923346	9611923347	9611923348	9611923349	9611923350	9611923351
▲	Service kit, Q (silicone)	9611923352	9611923353	9611923354	9611923355	9611923356	9611923357
▲	Service kit, PFA		9611923358	9611923359	9611923360	9611923361	9611923362

Parts marked with ▲ are included in the service kit.
Recommended spare parts: Service kit.

NOTE!!
Lubricate the pin holes in the seal (5) with Klüber Paraliq GTE 703 or similar.
Very important for Q and FPM.

900583/2

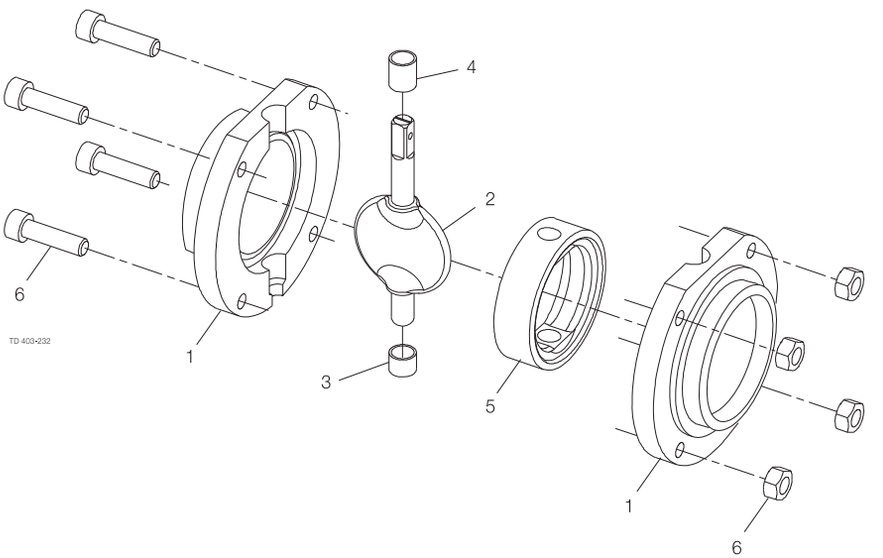
4
2
6
TD 403-232
1
3
5
1
6

Pos		Qty	Denomination	25mm □8	38mm □8	51mm □8	63.5mm □8	76mm □10	101.6mm □12
1		2	Valve body half, AISI 304	9613850101	9613850201	9613850301	9613850401	9613850501	9613850601
2		1	Disc, AISI 304	9611413680	9611411690	9611411770	9611411850	9611411930	9612046301
3	♦	1	Bush	9611411810	9611411730	9611411810	9611411890	9611411970	9611412060
4	♦	1	Bush	9611413760	9611411730	9611411810	9611411890	9611411970	9611412050
5	♦	1	Seal ring, EPDM	9611414135	9611414095	9611414105	9611414115	9611414065	9611414125
		1	Seal ring, Silicone Q	9611413720	9611411740	9611411820	9611411900	9611411980	9611412070
		1	Seal ring, Viton FPM	9611414133	9611414093	9611414103	9611414113	9611414063	9611414123
		1	Seal ring, HNBR	9611414134	9611414094	9611414104	9611414114	9611414064	9611414124
		1	Seal ring, PFA on EPDM	N/A	9611923202[1]	9612900601	9612900701	9612900801	9612900901
6		1	Set screw, M6+Nut M6	9611417330	9611417330	9611417330			
		1	Set screw, M8+Nut M8				9611417310	9611417350	
		1	Set screw, M10+Nut M10						9611417320

		25mm □8	38mm □8	51mm □8	63.5mm □8	76mm □10	101.6mm □12
♦	Service kit EPDM	9611923219	9611923220	9611923221	9611923222	9611923223	9611923224
♦	Service kit Q	9611923034	9611923035	9611923036	9611923037	9611923038	9611923039
♦	Service kit FPM	9611923040	9611923041	9611923042	9611923043	9611923044	9611923045
♦	Service kit HNBR	9611923160	9611923161	9611923162	9611923163	9611923164	9611923165
♦	Service kit PFA	N/A	9611923183	9611923184	9611923185	9611923186	9611923187

Parts marked with ♦ are included in the service kits.
Recommended spare parts: Service kits.

NOTE!!
Lubricate the pin holes in the seal (5) with Klüber Paraliq GTE 703 or similar.
Very important for Q and FPM.

[1]Seal-ring is delivered assembled with disc.

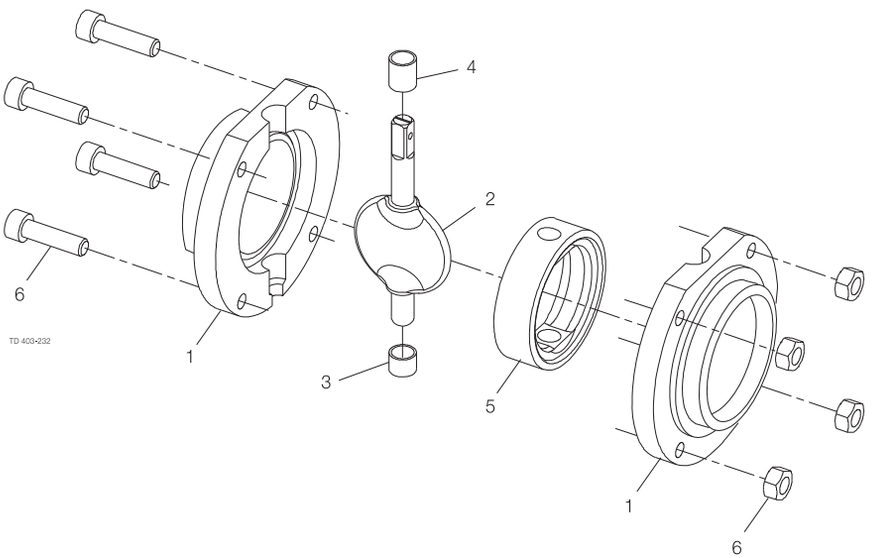
4
2
6
TD 403-232
1
3
5
1
6

Pos		Qty	Denomination	DN25 □8	DN32 □8	DN40 □8	DN50 □8
1		2	Valve body half, AISI 304, welding end	9615202801	9615202901	9615203001	9615203101
		2	Valve body half, AISI 304, male part end	9615205401	9615205402	9615205403	9615205404
2		1	Disc, AISI 304	9612073605	9612073705	9612073805	9612073905
3	♦	1	Bush	9611411810	9611411810	9611411810	9611411890
4	♦	1	Bush	9611411810	9611411810	9611411810	9611411890
5	♦	1	Seal ring, EPDM	9612070001	9612070101	9612070201	9612070301
	♦	1	Seal ring, Silicone Q	9612070901	9612071001	9612071101	9612071201
	♦	1	Seal ring, FPM	9612071801	9612071901	9612072001	9612072101
6		1	Set screw, M6 + Nut M6	9611417330	9611417330	9611417330	9611417330

Pos		Qty	Denomination	DN65 □10	DN80 □10	DN100 □12
1		2	Valve body half, AISI 304, welding end	9615203201	9615203301	9615203401
		2	Valve body half, AISI 304, male part end	9615205405	9615205406	9615205407
2		1	Disc, AISI 304	9612074005	9612074105	9612074205
3	♦	1	Bush	9611411890	9611411890	9611411970
4	♦	1	Bush	9611411890	9611411890	9611411970
5	♦	1	Seal ring, EPDM	9612070401	9612070501	9612070601
	♦	1	Seal ring, Silicone Q	9612071301	9612071401	9612071501
	♦	1	Seal ring, FPM	9612072201	9612072301	9612072401
6		1	Set screw, M8 + Nut M8	9611417310	9611417350	
		1	Set screw, M10 + Nut M10			9611417320

Service kits

		DN25 □8	DN32 □8	DN40 □8	DN50 □8
♦	Service kit, EPDM	9611923413	9611923414	9611923415	9611923416
♦	Service kit, Q	9611923083	9611923084	9611923085	9611923086
♦	Service kit, FPM	9611923091	9611923092	9611923093	9611923094

		DN65 □10	DN80 □10	DN100 □12
♦	Service kit, EPDM	9611923417	9611923418	9611923419
♦	Service kit, Q	9611923087	9611923088	9611923089
♦	Service kit, FPM	9611923095	9611923096	9611923097

Parts marked with ♦ are included in the service kits.
Recommended spare parts: service kits.
Seal ring is delivered assembled with disc.

NOTE!!
Lubricate the pin holes in the seal (5) with Klüber Paraliq GTE 703 or similar.
Very important for Q and FPM.

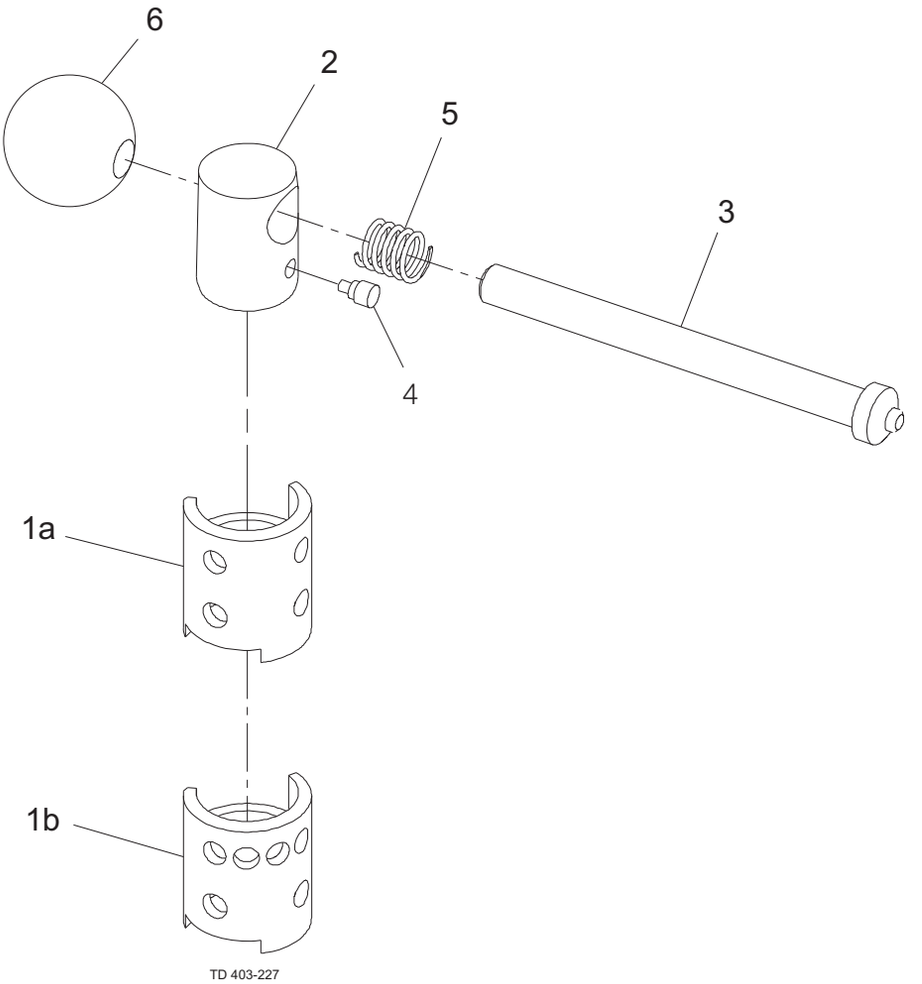
6
2
5
3
4
1a
1b
TD 403-227

Pos	Qty	Denomination	25-63.5mm □8	76mm □10	101.6mm □12
1a	1	Location cap, 2 pos.			
1b	1	Location cap, 4 pos.			
2	1	Transfer block			
3	1	Handle			
4	1	Screw with pin	9612045201	9612045301	9612045301
5	1	Spring	9611991998	9611991998	9611991982
6	1	Ball	9611991970	9611991970	9611991981

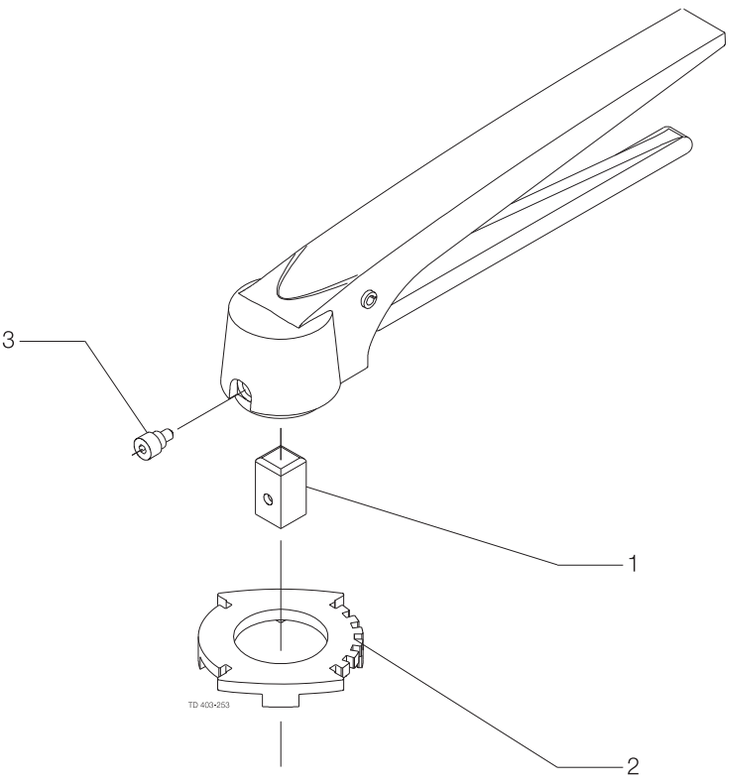
3
1
2
TD 400-253

Pos	Qty	Denomination	Disc □ 8	Disc □ 10	Disc □ 12
1	1	Insert			
2	1	Positioning cap, (76-101.6 mm/DN65-100)			
		Positioning cap, (25-63.5 mm/DN25-50)			
3	1	Screw	9612045302	9612045301	9612045301

900530

1.3

Handle 1.1 for LKB butterfly valve

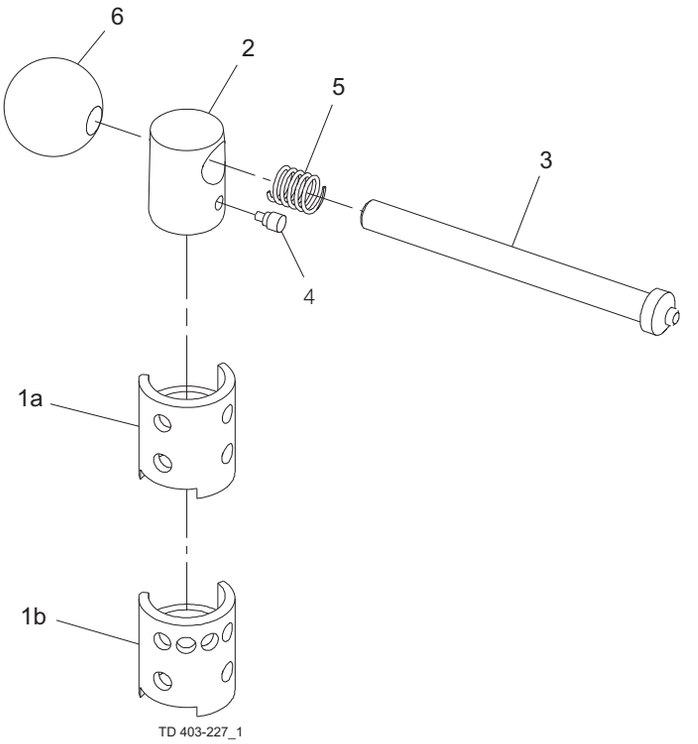

Handle 1.1 with infinite positions for LKB Butterfly valve

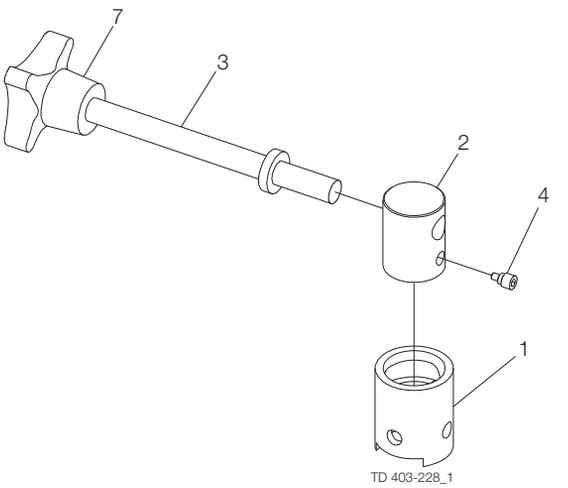

Handle 1.1 for Butterfly valve LKB (standard)

Pos	Qty	Denomination	25 - 63.5 mm DN 25 - 50 Disc □ 8	76 mm DN 65 - 80 Disc □ 10	101.6 mm DN 100 Disc □ 12	DN 125 Disc □ 14	DN 150 Disc □ 15
1a	1	Location cap , with 2 pos.					
1b	1	Location cap , with 4 pos.					
2	1	Transfer block					
3	1	Handle					
4	1	Screw with pin	9612045201	9612045301	9612045301	9612045301	9612045301
5	1	Spring	9611991998	9611991998			
6	1	Ball	9611991970	9611991970	9611991981	9611992512	9611992713

Handle 1.1 for Butterfly valve LKB (cap turned 90º)

Pos	Qty	Denomination	25 - 63.5 mm DN 25 - 50 Disc □ 8	76 mm DN 65 - 80 Disc □ 10	101.6 mm DN 100 Disc □ 12
1a	1	Location cap turned 90^0 2 pos.			
1b	1	Location cap turned 90^0 4 pos.			
2	1	Transfer block			
3	1	Handle			
4	1	Screw with pin	9612045201	9612045301	9612045301
5	1	Spring	9611991998	9611991998	9611991982
6	1	Ball	9611991970	9611991970	9611991981

Handle 1.1 with infinite positions for Butterfly valve LKB

Pos	Qty	Denomination	25 - 63.5 mm DN 25 - 50 Disc □ 8	76 mm DN 65 - 80 Disc □ 10	101.6 mm DN 100 Disc □ 12
1	1	Location cap			
2	1	Transfer block			
3	1	Handle			
4	1	Screw with pin	9612045201	9612045301	9612045301
7	1	Crosshead			

NB:

1) Handle 1.1 with □ 10 connection can also be used for old version 101.6 mm DN 100 LKB valve.

1) Handle 1.1 with □ 8 connection can also be used for old version DN 65 LKB valve.

900265

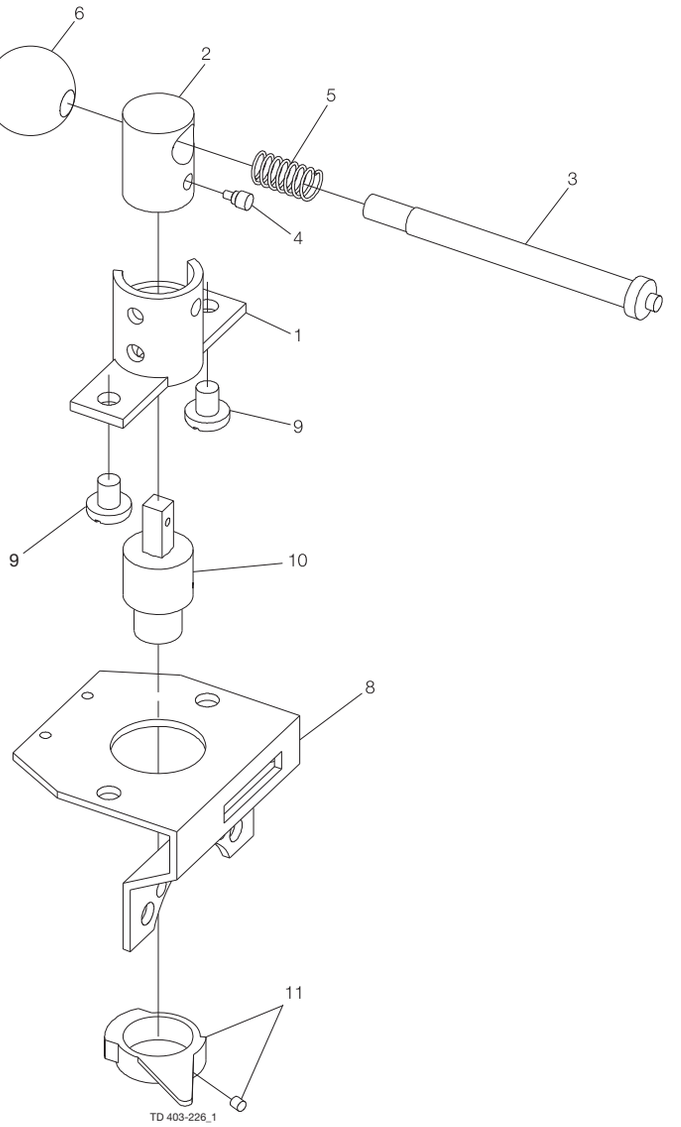
6
2
5
3
4
1
9
9
10
8
11
TD 403-226_1

Pos	Qty	Denomination	25 - 63.5 mm DN 25-50 Disc □ 8	76 mm DN 80 Disc □ 10	101.6 mm DN 100 Disc □ 12	DN 65 (LKB-DIN) Disc □ 10
1	1	Location cap with 2 pos.				
2	1	Transfer block				
3	1	Handle				
4	1	Screw with pin	9612045201	9612045301	9612045301	9612045301
5	1	Spring	9611991998	9611991998	9611991982	9611991998
6	1	Ball	9611991970	9611991970	9611991981	9611991970
8	1	Bracket	9611416470	9611416480	9611416480	9612081502
9	2	Screw	9611991686	9611991686	9611991686	9611991686
10	1	Coupling				
11	1	Activating ring with screw	9611416690	9611416690	9611416690	9611416690

900167/1

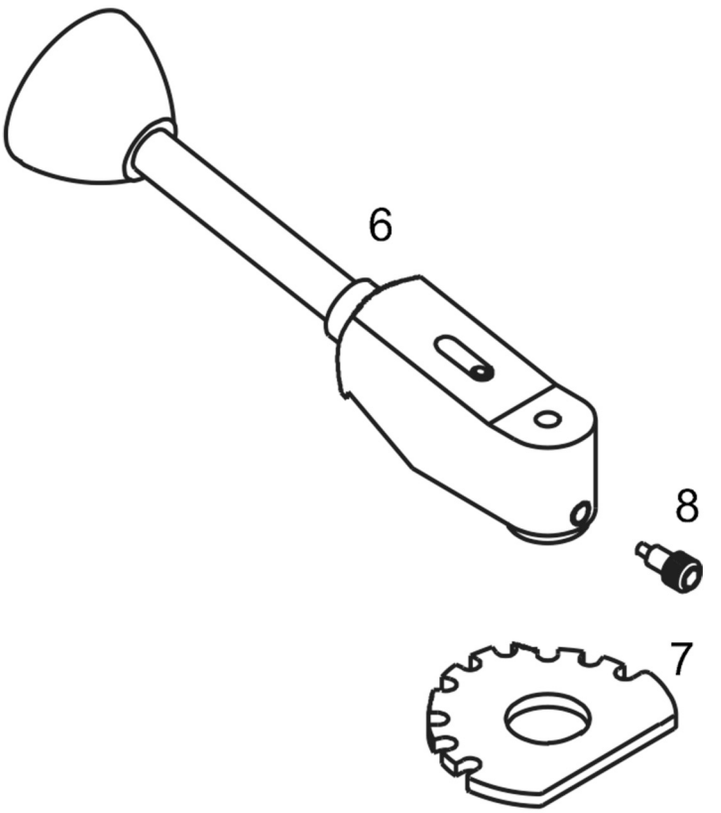
6
8
7

Pos	Qty	Denomination	1”	1 1/2”	2”	2 1/2”	3”	4”
6	1	Handle	331015	331015	331015	331015	331016	331016
7	1	Stop Plate	331141C	331141C	331141C	331141C	331142C	331142C
8	1	Ret. Screw	330028	330028	330028	330028	330035	330035

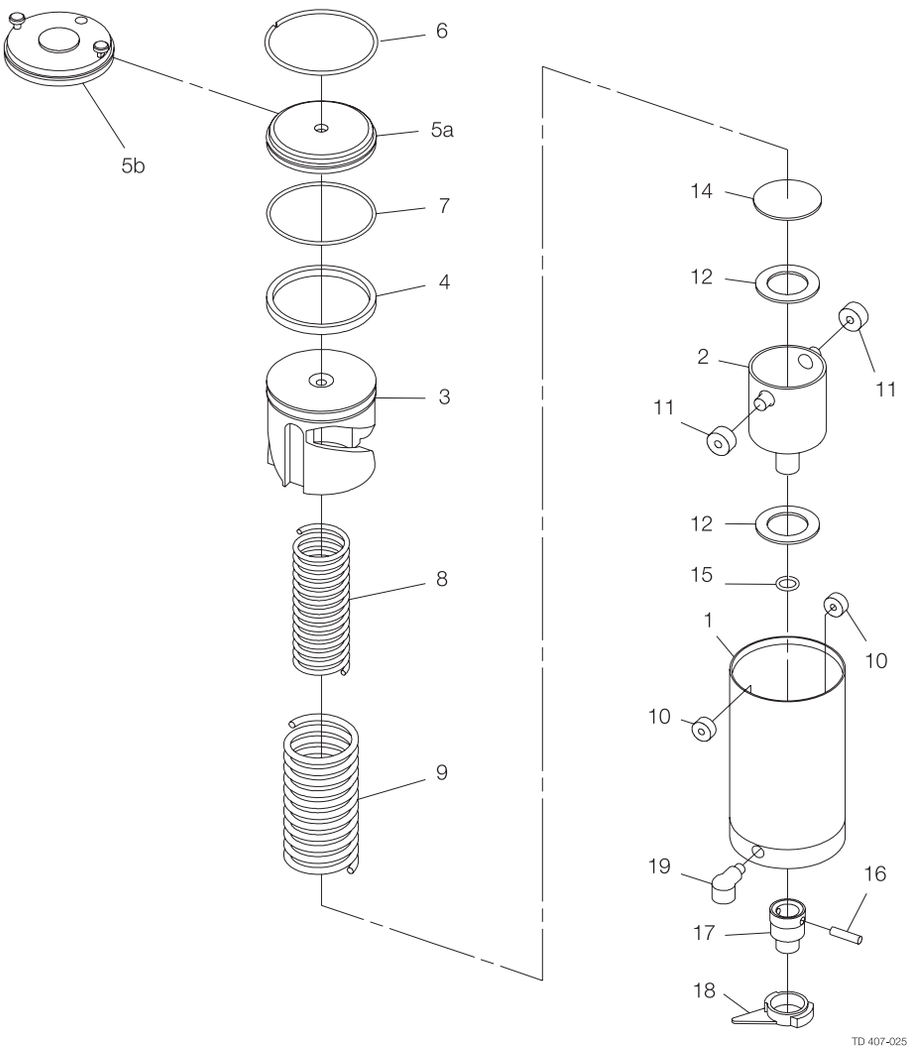
6
5a
5b
7
4
3
8
9
14
12
2
11
11
12
15
1
10
10
19
16
17
18
TD 407-025

Pos		Qty	Denomination	NC 25-63.5 mm DN 25-50 Disc □ 8	NC 76 mm DN 65-80 Disc □ 10	NC 101.6 mm DN 100 Disc □ 12	NO 25-63.5 mm DN 25-50 Disc □ 8	NO 76 mm DN 65-80 Disc □ 10	NO 101.6 mm DN 100 Disc □ 12
1		1	Air cylinder	9611417580	9611417580	9611417580	9611417580	9611417580	9611417580
2		1	Rotating cylinder	9611416380	9611416380	9611416380	9611416380	9611416380	9611416380
3		1	Piston	9612194401	9612194401	9612194401	9612194301	9612194301	9612194301
4	□	1	O-ring, NBR	9611990052	9611990052	9611990052	9611990052	9611990052	9611990052
5a		1	End cap, (Period 0011-)	9611416330	9611416330	9611416330	9611416330	9611416330	9611416330
		1	End cap, (Period 8301-0011)	3135707401	3135707401	3135707401	3135707401	3135707401	3135707401
6		1	Retaining ring	9611402021	9611402021	9611402021	9611402021	9611402021	9611402021
7	□	1	O-ring, NBR	9611990396	9611990396	9611990396	9611990396	9611990396	9611990396
8		1	Inner spring	9611991629	9611991629	9611991629	9611991629	9611991629	9611991629
9		1	Outer spring	9611991631	9611991631	9611991631	9611991631	9611991631	9611991631
10	□	2	Needle bearing	9611991230	9611991230	9611991230	9611991230	9611991230	9611991230
11	□	2	Needle bearing	9611991231	9611991231	9611991231	9611991231	9611991231	9611991231
12	□	2	Thrust bearing	9611991236	9611991236	9611991236	9611991236	9611991236	9611991236
14		1	Thrust plate	9611416460	9611416460	9611416460	9611416460	9611416460	9611416460
15	□	1	O-ring, NBR	9611991233	9611991233	9611991233	9611991233	9611991233	9611991233
16		1	Connex pin	9611991235	9611991235	9611991235	9611991235	9611991235	9611991235
17		1	Coupling	9611416440	9611416450	9612044703	9611416440	9611416450	9612044703
18		1	Activating ring, Noryl with screw	9611416690	9611416690	9611416690	9611416690	9611416690	9611416690
19		1	Water rejector (period 8310-)	9611417750	9611417750	9611417750	9611417750	9611417750	9611417750

NC/NO for Altop

Pos		Qty	Denomination	NC 25-63.5 mm DN 25-50 Disc □ 8	NC 76 mm DN 65-80 Disc □ 10	NC 101.6 mm DN 100 Disc □ 12	NO 25-63.5 mm DN 25-50 Disc □ 8	NO 76 mm DN 65-80 Disc □ 10	NO 101.6 mm DN 100 Disc □ 12
5b		1	End cap, Mark III	9611416740	9611416740	9611416740	9611416740	9611416740	9611416740

All other parts as above.

Service kit for actuator

Service kits, air/spring 9611923010

Note:
Butterfly valve 101.6 mm / DN100 sold before 8906 = □ 10 mm
Butterfly valve DN 65 (ISO) sold before 8910 = □ 8 mm
Please check the square size of the disc when ordering spares.

Parts marked with □ are included in the service kit.
Recommended spare parts: Service kit.

900128/2

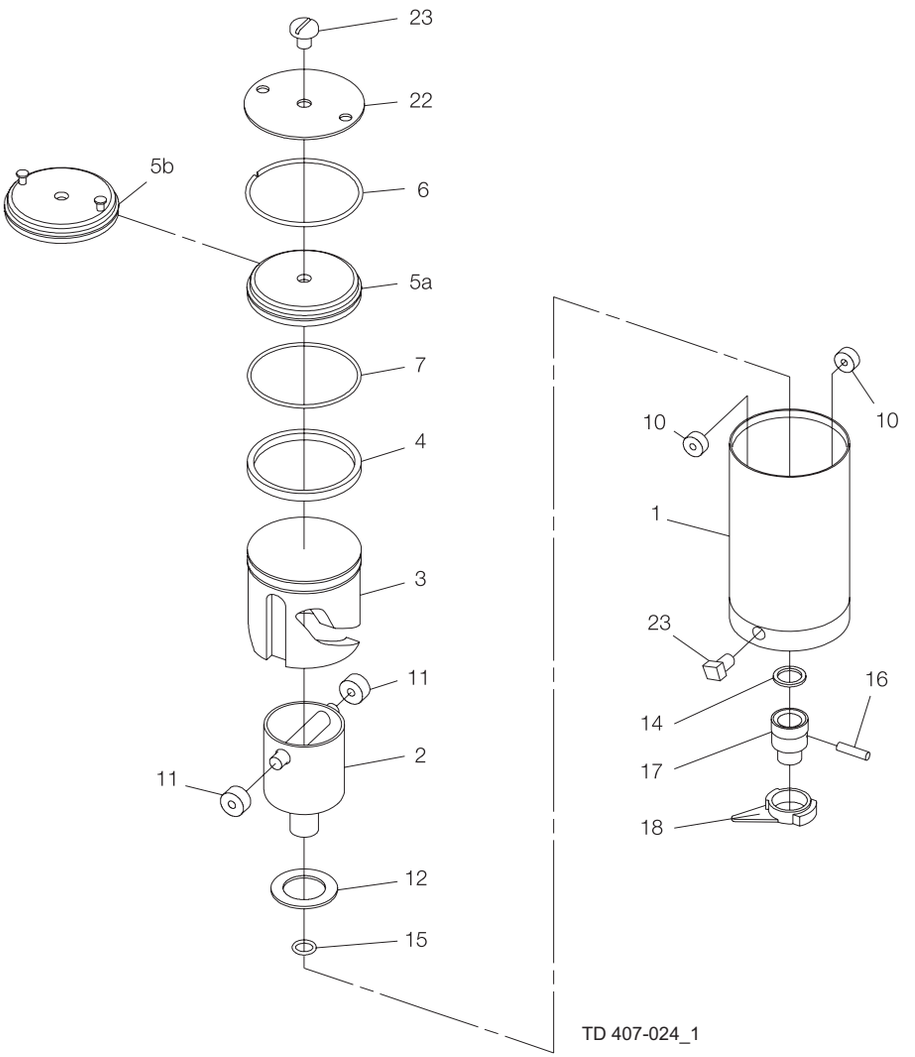
23
22
5b
6
5a
7
4
3
11
2
11
12
15
10
10
1
23
16
14
17
18
TD 407-024_1

Pos		Qty	Denomination	25-63.5 mm DN 25-50 Disc □ 8	76 mm DN 65-80 Disc □ 10	101.6 mm DN 100 Disc □ 12
1		1	Air cylinder	9611417580	9611417580	9611417580
2		1	Rotating cylinder	9611417440	9611417440	9611417440
3		1	Piston	9611417520	9611417520	9611417520
4	□	1	O-ring, NBR	9611990052	9611990052	9611990052
5a		1	End cap, (Period 0011-)	9611416330	9611416330	9611416330
		1	End cap, (Period 8301-0011)	3135707401	3135707401	3135707401
6		1	Retaining ring	9611402021	9611402021	9611402021
7	□	1	O-ring , NBR	9611990396	9611990396	9611990396
10	□	2	Needle bearing	9611991230	9611991230	9611991230
11	□	2	Needle bearing	9611991231	9611991231	9611991231
12	□	1	Thrust bearing	9611991236	9611991236	9611991236
14		1	Thrust plate	9611417570	9611417570	9611417570
15	□	1	O-ring, NBR	9611991233	9611991233	9611991233
16		1	Connex pin	9611991235	9611991235	9611991235
17		1	Coupling	9611417550	9611417560	9612044802
18		1	Activating ring with screw	9611416690	9611416690	9611416690
22***		1	Retaining plate	9611414370	9611414370	9611414370
23		2	Threaded plug	9611991221	9611991221	9611991221

Air/air for Altop

Pos	Qty	Denomination	25-63.5 mm DN 25-50 Disc □ 8	76 mm DN 65-80 Disc □ 10	101.6 mm DN 100 Disc □ 12
5b	1	End cap, Mark III	9611416740	9611416740	9611416740

All other parts as above.

Service kits for actuator

Service kits, air/air	9611923011

Note:
*** Up to 8910 supplied without holes, not available anymore
Butterfly valve 101.6 mm / DN100 sold before 8906 = □ 10 mm
Butterfly valve DN 65 (ISO) sold before 8910 = □ 8 mm
Please check the square size of the disc when ordering spares.

Parts marked with □ are included in the service kit.
Recommended spare parts: Service kit.

900129/1

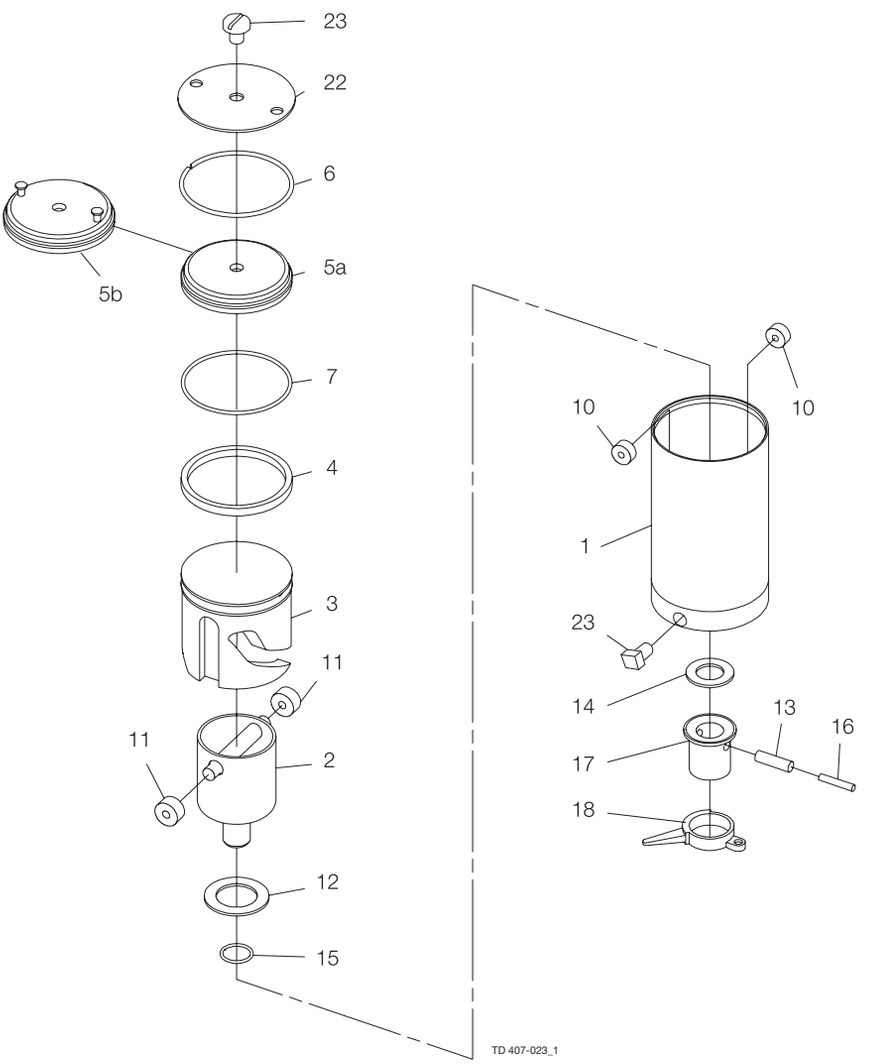
23
22
6
5a
5b
7
4
3
11
11
2
12
15
10
10
1
23
14
13
16
17
18
TD 407-023_1

Pos		Qty	Denomination	DN 125 Disc □ 14	DN 150 Disc □ 15
1		1	Air cylinder	9611417420	9611417420
2		1	Rotating cylinder	9611417440	9611417440
3		1	Piston	9611417520	9611417520
4	□	1	O-ring, NBR	9611990052	9611990052
5a		1	End cap, (Period 0011-)	9611416330	9611416330
		1	End cap, (Period 8301-0011)	3135707401	3135707401
6		1	Retaining ring	9611402021	9611402021
7	□	1	O-ring, NBR	9611990396	9611990396
10	□	2	Needle bearing	9611991230	9611991230
11	□	2	Needle bearing	9611991231	9611991231
12	□	1	Thrust bearing	9611991236	9611991236
13		1	Connex pin	9611991314	9611991314
14		1	Thrust plate	9611417540	9611417540
15	□	1	O-ring, NBR	9611990030	9611990030
16		1	Connex pin	9611991313	9611991313
17		1	Coupling	9612285602	9611417471
18		1	Activating ring with screw	9611416650	9611416650
22***		1	Retaining plate	9611414370	9611414370
23		2	Threaded plug	9611991221	9611991221

Air/air for Altop

Pos	Qty	Denomination	Disc □ 14	Disc □ 15
5b	1	End cap, Mark III	9611416740	9611416740

All other parts as above.

Service kits for actuator

Service kits, air/air	9611923012

*** Up to 8910 supplied without holes, not available anymore
Parts marked with □ are included in the service kit.
Recommended spare parts: Service kit.

900130/1

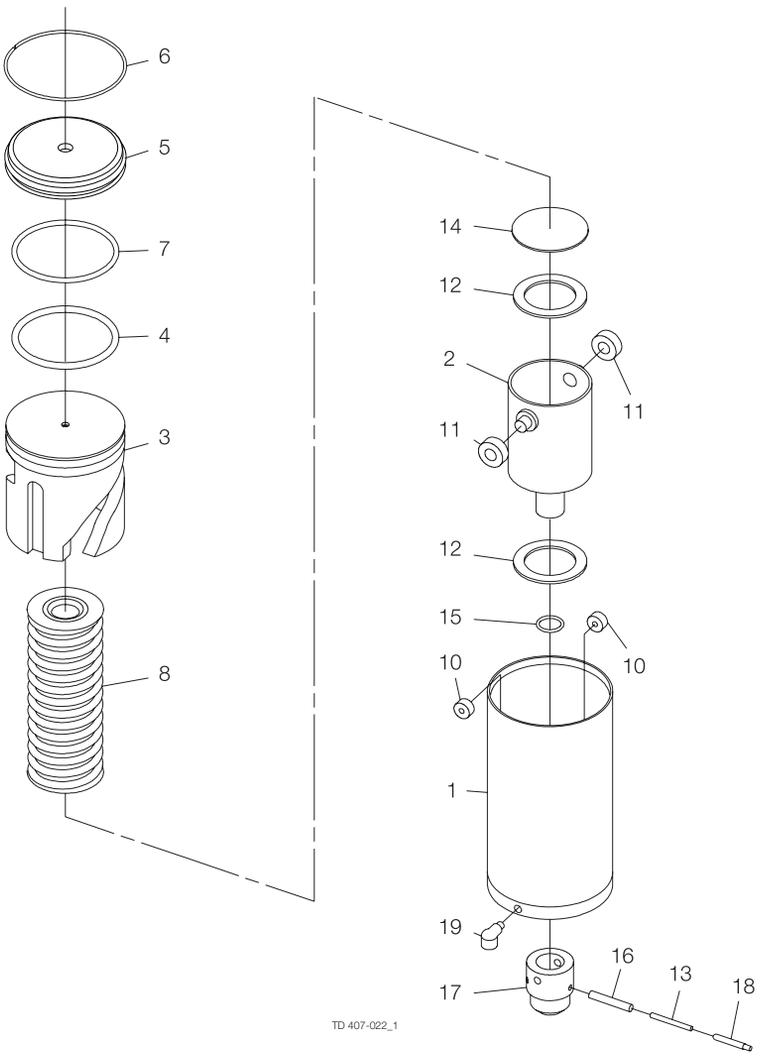
6
5
7
4
3
8
14
12
2
11
11
12
15
10
10
1
19
16
13
18
17
TD 407-022_1

Pos		Qty	Denomination	NC 101.6 mm DN 100 Disc □ 12	NO 101.6 mm DN 100 Disc □ 12	NC DN 125 Disc □ 14	NO DN 125 Disc □ 14	NC DN 150 Disc □ 15	NO DN 150 Disc □ 15
1		1	Air cylinder	9612268501	9612268501	9612268501	9612268501	9612268501	9612268501
2		1	Rotating cylinder	9612267801	9612267801	9612267801	9612267801	9612267801	9612267801
3		1	Piston	9612270002	9612268002	9612270002	9612268002	9612270002	9612268002
4	□	1	O-ring , NBR	9611992367	9611992367	9611992367	9611992367	9611992367	9611992367
5		1	End cap, (Period: 0011-)	9612267501	9612267501	9612267501	9612267501	9612267501	9612267501
		1	End cap, (Period:9001 - 0011)	9612271401	9612271401	9612271401	9612271401	9612271401	9612271401
6		1	Retaining ring	9612268201	9612268201	9612268201	9612268201	9612268201	9612268201
7	□	1	O-ring, NBR	9611990035	9611990035	9611990035	9611990035	9611990035	9611990035
8		1	Spring assembly	9612270101	9612270101	9612270101	9612270101	9612270101	9612270101
10	□	2	Needle bearing	9611991231	9611991231	9611991231	9611991231	9611991231	9611991231
11	□	2	Needle bearing	9611992355	9611992355	9611992355	9611992355	9611992355	9611992355
12	□	2	Thrust bearing	9611992347	9611992347	9611992347	9611992347	9611992347	9611992347
13		1	Connex pin	9611992357	9611992357	9611992357	9611992357	9611992357	9611992357
14		1	Thrust plate	9612267101	9612267101	9612267101	9612267101	9612267101	9612267101
15	□	1	O-ring, NBR	9611990079	9611990079	9611990079	9611990079	9611990079	9611990079
16		1	Connex pin	9611992358	9611992358	9611992358	9611992358	9611992358	9611992358
17		1	Coupling	9612271501	9612271501	9612271502	9612271502	9612271503	9612271503
18		1	Indication pin	9612271901	9612271901	9612271901	9612271901	9612271901	9612271901
19		1	Water rejector	9611417750	9611417750	9611417750	9611417750	9611417750	9611417750
21		1	Air fitting	9611991988	9611991988	9611991988	9611991988	9611991988	9611991988

Service kits for actuator

Service kits, air/spring 9611923020

Parts marked with □ are included in the service kit.
Recommended spare parts: service kit.

900131/1

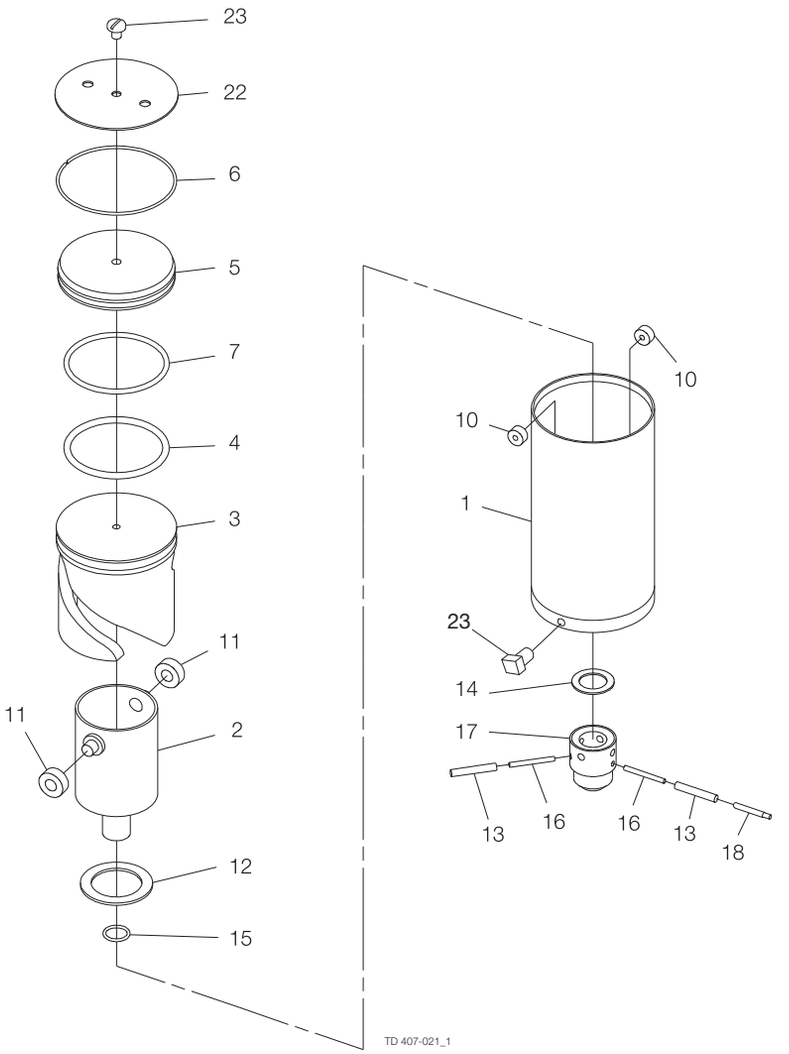
23
22
6
5
7
4
3
11
11
2
12
15
10
10
1
23
14
17
13
16
16
13
18
TD 407-021_1

Pos		Qty	Denomination	101.6 mm DN 100 Disc □ 12	DN 125 Disc □ 14	DN 150 Disc □ 15
1		1	Air Cylinder	9612268501	9612268501	9612268501
2		1	Rotating cylinder	9612267801	9612267801	9612267801
3		1	Piston	9612268001	9612268001	9612268001
4	□	1	O-ring, NBR	9611992367	9611992367	9611992367
5		1	End cap, (Period: 0011-)	9612267501	9612267501	9612267501
		1	End cap, (Period:9001 - 0011)	9612271401	9612271401	9612271401
6		1	Retaining ring	9612268201	9612268201	9612268201
7	□	1	O-ring , NBR	9611990035	9611990035	9611990035
10	□	2	Needle bearing	9611991231	9611991231	9611991231
11	□	2	Needle bearing	9611992355	9611992355	9611992355
12	□	1	Thrust bearing	9611992347	9611992347	9611992347
13		2	Connex pin	9611992358	9611992358	9611992358
14		1	Thrust plate	9612280401	9612280401	9612280401
15	□	1	O-ring, NBR	9611990079	9611990079	9611990079
16		2	Connex pin	9611992357	9611992357	9611992357
17		1	Coupling	9612282701	9612282702	9612282703
18		1	Indication pin	9612271901	9612271901	9612271901
22		1	Retaining plate	9612348601	9612348601	9612348601
23		1	Threaded plug	9611991221	9611991221	9611991221

Service kits for actuator

Service kits, air/air	9611923022

Parts marked with □ are included in the service kit.
Recommended spare parts: service kit.

900132/1

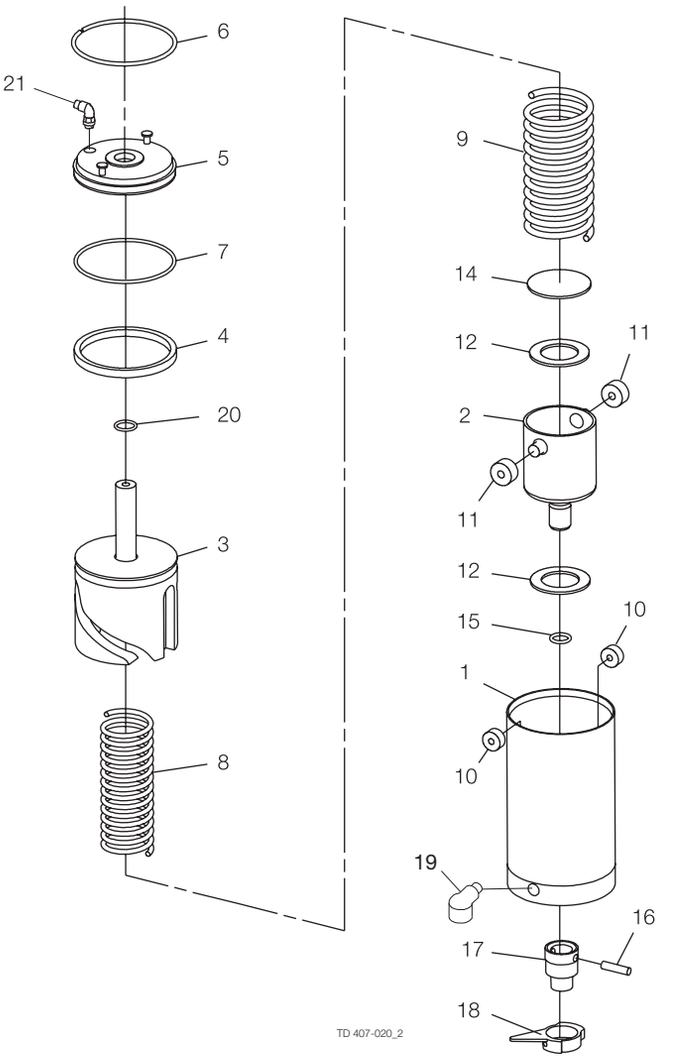
6
21
5
7
4
20
3
8
9
14
12
11
2
11
12
15
10
1
10
19
16
17
18
TD 407-020_2

Pos		Qty	Denomination	NC 25-63.5 mm DN 25-50 Disc □ 8	NC 76 mm DN 65-80 Disc □ 10	NC 101.6 mm DN 100 Disc □ 12	NO 25-63.5 mm DN 25-50 Disc □ 8	NO 76 mm DN 65-80 Disc □ 10	NO 101.6 mm DN 100 Disc □ 12
1		1	Air cylinder	9611417580	9611417580	9611417580	9611417580	9611417580	9611417580
2		1	Rotating cylinder	9611416380	9611416380	9611416380	9611416380	9611416380	9611416380
3		1	Piston	9612193902	9612193902	9612193902	9612193901	9612193901	9612193901
4	□	1	O-ring, NBR	9611990052	9611990052	9611990052	9611990052	9611990052	9611990052
5		1	End cap	9612193601	9612193601	9612193601	9612193601	9612193601	9612193601
6		1	Retaining ring	9611402021	9611402021	9611402021	9611402021	9611402021	9611402021
7	□	1	O-ring, NBR	9611990396	9611990396	9611990396	9611990396	9611990396	9611990396
8		1	Inner spring	9611991629	9611991629	9611991629	9611991629	9611991629	9611991629
9		1	Outer spring	9611991631	9611991631	9611991631	9611991631	9611991631	9611991631
10	□	2	Needle bearing	9611991230	9611991230	9611991230	9611991230	9611991230	9611991230
11	□	2	Needle bearing	9611991231	9611991231	9611991231	9611991231	9611991231	9611991231
12	□	2	Thrust bearing	9611991236	9611991236	9611991236	9611991236	9611991236	9611991236
14		1	Thrust plate	9611416460	9611416460	9611416460	9611416460	9611416460	9611416460
15	□	1	O-ring, NBR	9611991233	9611991233	9611991233	9611991233	9611991233	9611991233
16		1	Connex pin	9611991235	9611991235	9611991235	9611991235	9611991235	9611991235
17		1	Coupling	9611416440	9611416450	9612044703	9611416440	9611416450	9612044703
18		1	Activating ring with screw	9611416690	9611416690	9611416690	9611416690	9611416690	9611416690
20	□	1	O-ring, NBR	22340421	22340421	22340421	22340421	22340421	22340421
21		1	Air fitting	9611991988	9611991988	9611991988	9611991988	9611991988	9611991988
76		1	Positioner 8694 (incl. Pos. 77 to 85) - without display	9611995267	9611995267	9611995267			
		1	Positioner 8692 (incl. Pos. 77 to 85) - with display	9611995269	9611995269	9611995269			
77		1	Positioner 8694 without display						
		1	Positioner 8692 with display						
78		1	Adapter, cpl. (incl. Pos. 79 to 84)	9611995338	9611995338	9611995338			
79		1	Spindle						
80		1	Special X-ring	9612569601	9612569601	9612569601			
81		2	Allen screw	9611993409	9611993409	9611993409			
82		1	Adapter						
83		1	O-ring	9611995273	9611995273	9611995273			
84		1	Gasket for adapter	9611995274	9611995274	9611995274			
85		1	Puck sensorpad, cpl.	9611995275	9611995275	9611995275			
Service kits for actuator									
	□		**Service kits,**			**9611923021**	**9611923021**	**9611923021**	**9611923021**

Parts marked with □ are included in the service kit.
Recommended spare parts: service kit.

900133/2

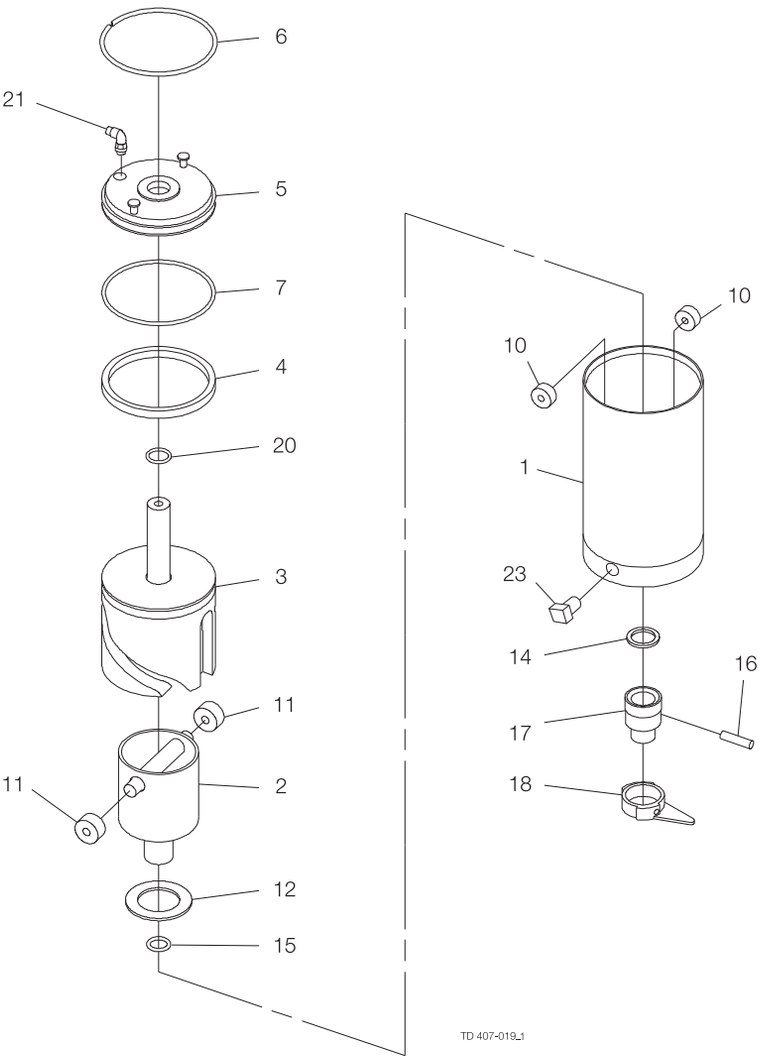
6
21
5
7
4
20
3
11
11
2
12
15
10
10
1
23
14
16
17
18
TD 407-019_1

Pos		Qty	Denomination	25-63.5 mm DN 25-50 Disc □ 8	76 mm DN 65-80 Disc □ 10	101.6 mm DN 100 Disc □ 12
1		1	Air cylinder	9611417580	9611417580	9611417580
2		1	Rotating cylinder	9611417441	9611417441	9611417441
3		1	Piston	9612193903	9612193903	9612193903
4	□	1	O-ring, NBR	9611990052	9611990052	9611990052
5		1	End cap	9612193601	9612193601	9612193601
6		1	Retaining ring	9611402021	9611402021	9611402021
7	□	1	O-ring, NBR	9611990396	9611990396	9611990396
10	□	2	Needle bearing	9611991230	9611991230	9611991230
11	□	2	Needle bearing	9611991231	9611991231	9611991231
12	□	1	Thrust bearing	9611991236	9611991236	9611991236
14		1	Thrust plate	9611417570	9611417570	9611417570
15	□	1	O-ring, NBR	9611991233	9611991233	9611991233
16		1	Connex pin	9611991235	9611991235	9611991235
17		1	Coupling	9611417551	9611417561	9612044802
18		1	Activating ring with screw	9611416690	9611416690	9611416690
20	□	1	O-ring, NBR	22340421	22340421	22340421
21		1	Air fitting	9611991988	9611991988	9611991988
23		1	Threaded plug	9611991221	9611991221	9611991221

Service kits for actuator

Service kits, air/air	9611923023

Parts marked with □ are included in the service kit.
Recommended spare parts: service kit.

900134/1

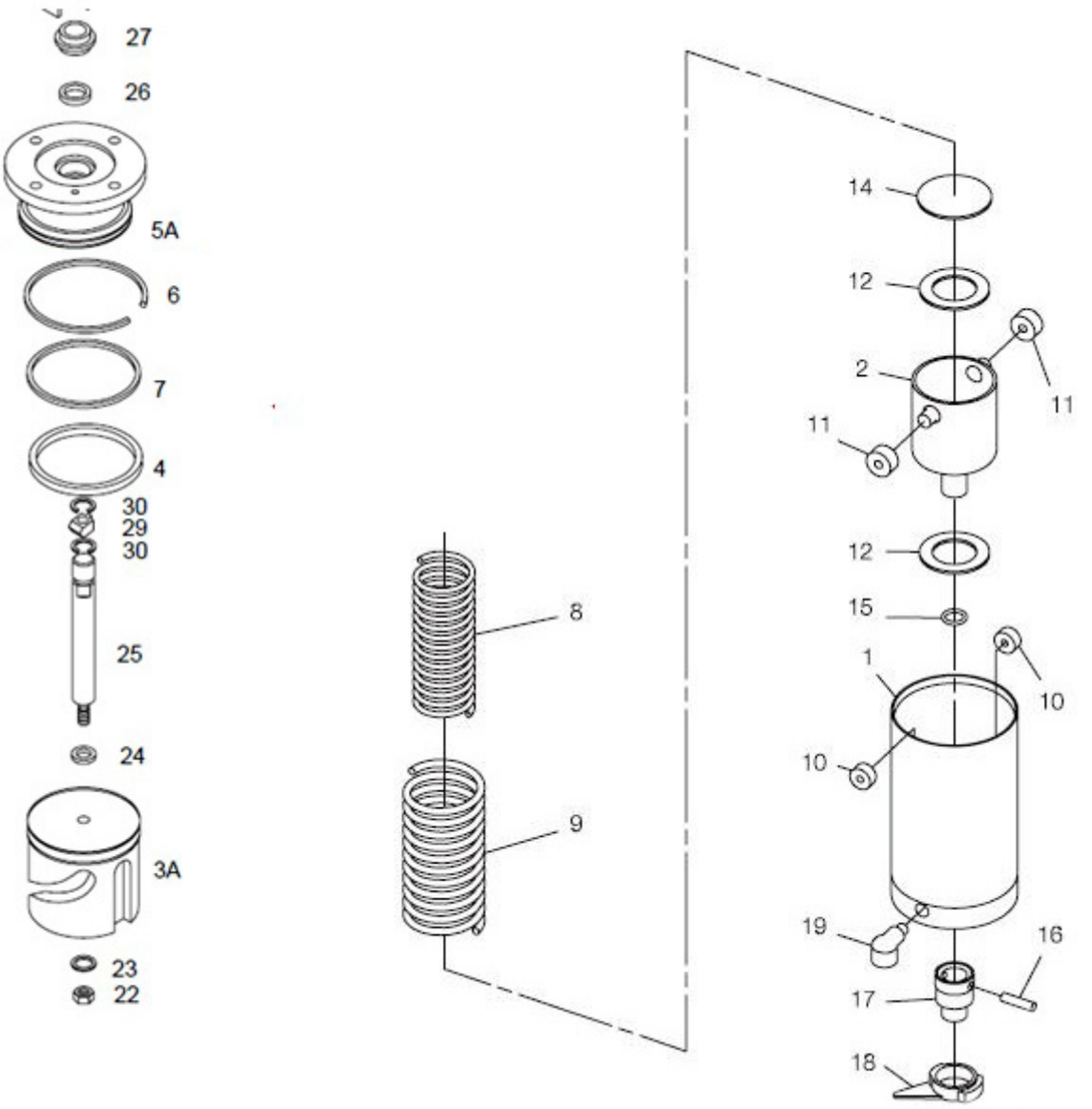
27
26
5A
6
7
4
30
29
30
25
24
3A
23
22
8
9
14
12
2
11
11
12
15
1
10
10
19
16
17
18

Pos		Qty	Denomination	NC 25-63.5 mm DN 25-50 Disc 8	NC 76 mm DN 65-80 Disc 10	NC 101.6 mm DN 100 Disc 12	NO 25-63.5 mm DN 25-50 Disc 8	NO 76 mm DN 65-80 Disc 10	NO 101.6 mm DN 100 Disc 12
1		1	Air cylinder	9611417580	9611417580	9611417580	9611417580	9611417580	9611417580
2		1	Rotating cylinder	9611416380	9611416380	9611416380	9611416380	9611416380	9611416380
3		1	Piston	303171	303171	303171	303171	303171	303171
4		1	O-ring	9611990052	9611990052	9611990052	9611990052	9611990052	9611990052
5A		1	Mounting adapter	303103	303103	303103	303103	303103	303103
6		1	Retaining ring	9611402021	9611402021	9611402021	9611402021	9611402021	9611402021
7	□	1	O-ring	401587	401587	401587	401587	401587	401587
8		1	Inner spring	9611991629	9611991629	9611991629	9611991629	9611991629	9611991629
9		1	Outer spring	9611991631	9611991631	9611991631	9611991631	9611991631	9611991631
10	□	2	Needle bearing	9611991230	9611991230	9611991230	9611991230	9611991230	9611991230
11	□	2	Needle bearing	9611991231	9611991231	9611991231	9611991231	9611991231	9611991231
12	□	2	Thrust bearing	9611991236	9611991236	9611991236	9611991236	9611991236	9611991236
14		1	Thrust plate	9611416460	9611416460	9611416460	9611416460	9611416460	9611416460
15	□	1	O-ring, NBR	9611991233	9611991233	9611991233	9611991233	9611991233	9611991233
16		1	Connex pin	9611991235	9611991235	9611991235	9611991235	9611991235	9611991235
17		1	Coupling	9611416440	9611416440	9611416440	9611416440	9611416440	9611416440
18		1	Activating ring, Noryl with screw	9611416690	9611416690	9611416690	9611416690	9611416690	9611416690
19		1	Water rejector (period 8310-)	9611417750	9611417750	9611417750	9611417750	9611417750	9611417750
22		1	Nut	180310	180310	180310	180310	180310	180310
23		1	Lock washer	198862	198862	198862	198862	198862	198862
24		1	Gasket	751638	751638	751638	751638	751638	751638
25		1	Rising stem	303159	303159	303159	303159	303159	303159
26		1	Vee packing	755461	755461	755461	755461	755461	755461
27		1	Seal Retainer	751680	751680	751680	751680	751680	751680
29		1	Indication nut - Proximity switch	762729	762729	762729	762729	762729	762729
		1	Indication nut - Micro switch	760551	760551	760551	760551	760551	760551
30		2	Retainer ring	750196	750196	750196	750196	750196	750196

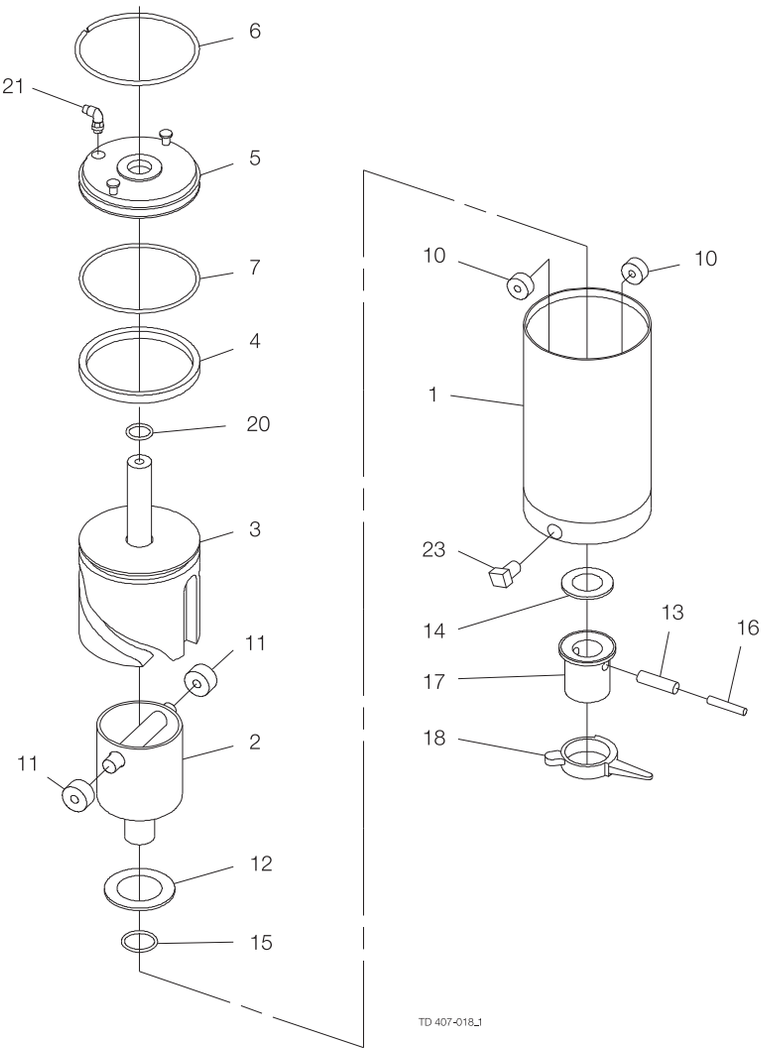
6
21
5
7
4
20
3
11
2
11
12
15
10
10
1
23
14
13
16
17
18
TD 407-018_1

Pos		Qty	Denomination	DN 125 Disc □ 14	DN 150 Disc □ 15
1		1	Air cylinder	9611417420	9611417420
2		1	Rotating cylinder	9611417440	9611417440
3		1	Piston	9612193903	9612193903
4	□	1	O-ring, NBR	9611990052	9611990052
5		1	End cap	9612193601	9612193601
6		1	Retaining ring	9611402021	9611402021
7	□	1	O-ring, NBR	9611990396	9611990396
10	□	2	Needle bearing	9611991230	9611991230
11	□	2	Needle bearing	9611991231	9611991231
12	□	1	Thrust bearing	9611991236	9611991236
13		1	Connex pin	9611991314	9611991314
14		1	Thrust plate	9611417540	9611417540
15	□	1	O-ring, NBR	9611990030	9611990030
16		1	Connex pin	9611991313	9611991313
17		1	Coupling	9612285602	9611417471
18		1	Activating ring with screw	9611416650	9611416650
20	□	1	O-ring , NBR	22340421	22340421
21		1	Air fitting	9611991988	9611991988
23		1	Threaded plug	9611991221	9611991221

Service kits for actuator

Service kits, air/air	9611923024

Parts marked with □ are included in the service kit.
Recommended spare parts: service kit.

900135/1

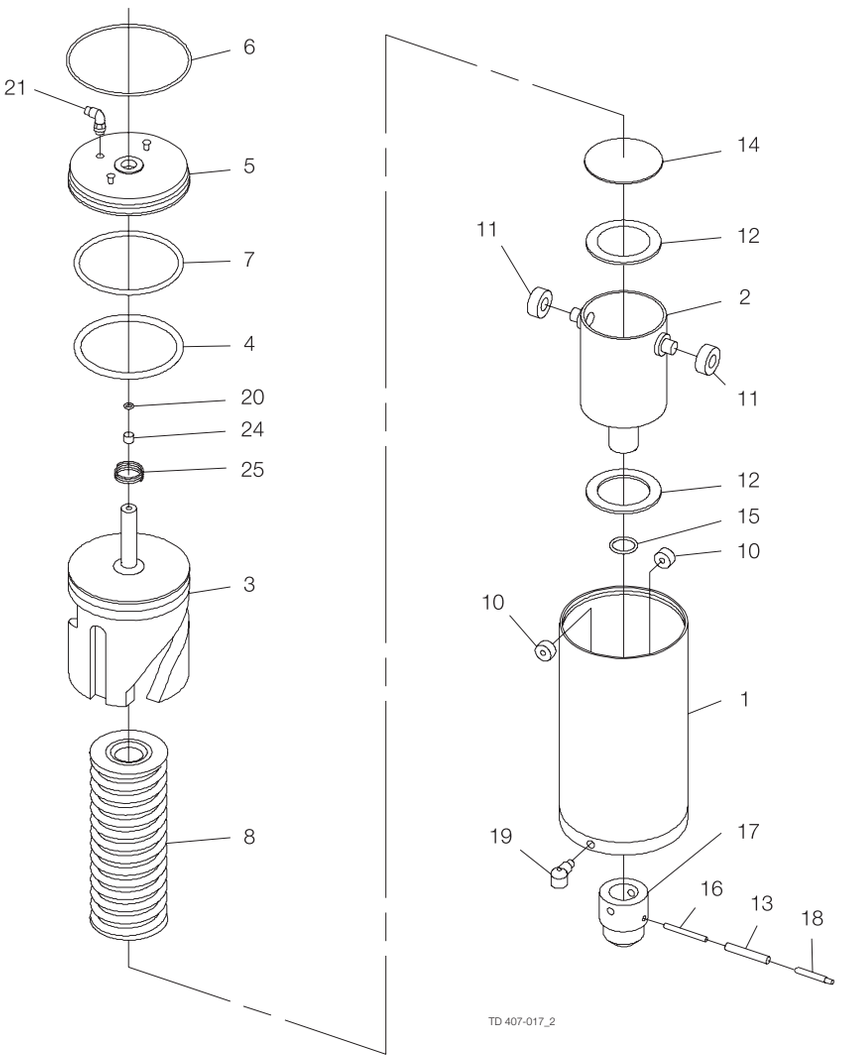
6
21
5
7
4
20
24
25
3
8
14
11
12
2
11
12
15
10
10
1
19
17
16
13
18
TD 407-017_2

Pos		Qty	Denomination	NC 101.6 mm DN 100 Disc □ 12	NO 101.6 mm DN 100 Disc □ 12	NC DN 125 Disc □ 14	NO DN 125 Disc □ 14	NC DN 150 Disc □ 15	NO DN 150 Disc □ 15
1		1	Air cylinder	9612268501	9612268501	9612268501	9612268501	9612268501	9612268501
2		1	Rotating cylinder	9612267801	9612267801	9612267801	9612267801	9612267801	9612267801
3		1	Piston	9612369901	9612369902	9612369901	9612369902	9612369901	9612369902
4	□	1	O-ring, NBR	9611992367	9611992367	9611992367	9611992367	9611992367	9611992367
5		1	End cap	9612271402	9612271402	9612271402	9612271402	9612271402	9612271402
6		1	Retaining ring	9612268201	9612268201	9612268201	9612268201	9612268201	9612268201
7	□	1	O-ring, NBR	9611990035	9611990035	9611990035	9611990035	9611990035	9611990035
8		1	Spring assembly	9612270101	9612270101	9612270101	9612270101	9612270101	9612270101
10	□	2	Needle bearing	9611991231	9611991231	9611991231	9611991231	9611991231	9611991231
11	□	2	Needle bearing	9611992355	9611992355	9611992355	9611992355	9611992355	9611992355
12	□	2	Thrust bearing	9611992347	9611992347	9611992347	9611992347	9611992347	9611992347
13		1	Connex pin	9611992357	9611992357	9611992357	9611992357	9611992357	9611992357
14		1	Thrust plate	9612267101	9612267101	9612267101	9612267101	9612267101	9612267101
15	□	1	O-ring, NBR	9611990079	9611990079	9611990079	9611990079	9611990079	9611990079
16		1	Connex pin	9611992358	9611992358	9611992358	9611992358	9611992358	9611992358
17		1	Coupling	9612271501	9612271501	9612271502	9612271502	9612271503	9612271503
18		1	Indication pin	9612271901	9612271901	9612271901	9612271901	9612271901	9612271901
19		1	Water rejector (period 8310-)	9611417750	9611417750	9611417750	9611417750	9611417750	9611417750
20	□	1	O-ring	22340421	22340421	22340421	22340421	22340421	22340421
21		1	Air fitting	9611991988	9611991988	9611991988	9611991988	9611991988	9611991988
24	□	1	Guiding ring	9612369801	9612369801	9612369801	9612369801	9612369801	9612369801
25		1	Spring	9612370001	9612370001	9612370001	9612370001	9612370001	9612370001

Service kits for actuator

Service kits, air/spring 9611923056

Parts marked with □ are included in the service kit.

Recommended spare parts: service kit.

900136

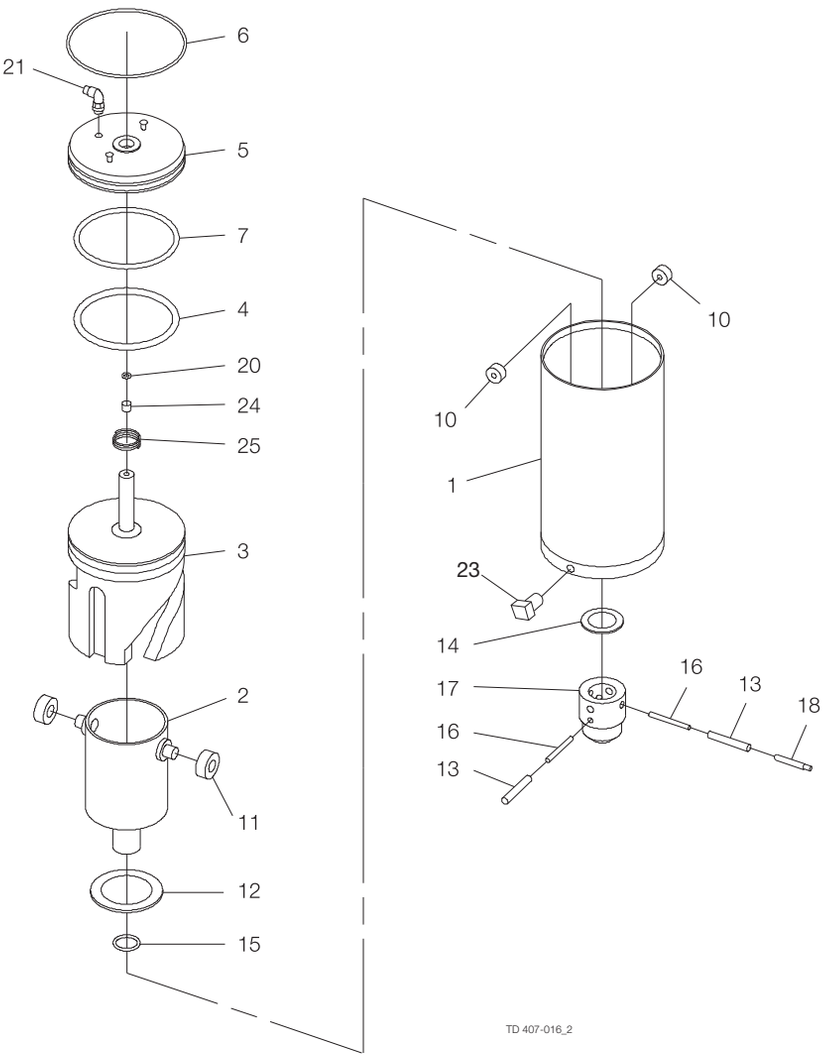
6
21
5
7
4
20
24
25
3
2
11
12
15
10
10
1
23
14
16
17
16
13
13
18
TD 407-016_2

Pos		Qty	Denomination	9612374908 101.6 mm DN 100 Disc □ 12	9612374913 DN 125 Disc □ 14	9612374918 DN 150 Disc □ 15
1		1	Air cylinder	9612268501	9612268501	9612268501
2		1	Rotating cylinder	9612267801	9612267801	9612267801
3		1	Piston	9612369902	9612369902	9612369902
4	□	1	O-ring, NBR	9611992367	9611992367	9611992367
5		1	End cap	9612271402	9612271402	9612271402
6		1	Retaining ring	9612268201	9612268201	9612268201
7	□	1	O-ring, NBR	9611990035	9611990035	9611990035
10	□	2	Needle bearing	9611991231	9611991231	9611991231
11	□	2	Needle bearing	9611992355	9611992355	9611992355
12	□	1	Thrust bearing	9611992347	9611992347	9611992347
13		2	Connex pin	9611992358	9611992358	9611992358
14		1	Thrust plate	9612280401	9612280401	9612280401
15	□	1	O-ring, NBR	9611990079	9611990079	9611990079
16		2	Connex pin	9611992357	9611992357	9611992357
17		1	Coupling	9612282701	9612282702	9612282703
18		1	Indication pin	9612271901	9612271901	9612271901
20	□	1	O-ring, NBR	22340421	22340421	22340421
21		1	Air fitting	9611991988	9611991988	9611991988
23		1	Threaded plug	9611991221	9611991221	9611991221
24	□	1	Guiding band	9612369801	9612369801	9612369801
25		1	Spring	9612370001	9612370001	9612370001

Service kits for actuator

Service kits, air/air	9611923057

Parts marked with □ are included in the service kit.

Recommended spare parts: service kit.

190137/1

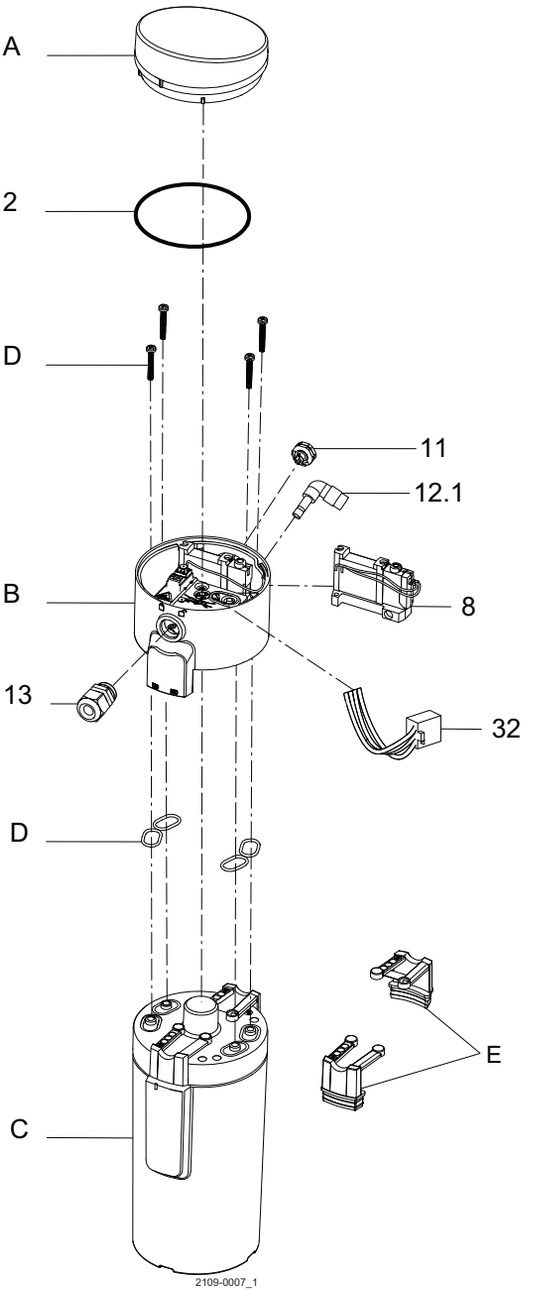
A
2
D
11
12.1
B
8
13
32
D
E
C
2109-0007_1

Pos	Qty	Denomination	Digital	ASI v.2.11	ASI v.3.0
A		Top incl. prism and O-rings	9614091101	9614091101	9614091101
2	1	O-ring	9611995306	9611995306	9611995306
B		Base, cpl., with solenoid	9614090402	9614090401	9614090406
		Base, cpl., without solenoid	9614090409	9614090408	9614090410
8	1	Solenoid valve, cpl.	9614080301	9614080301	9614080301
11	1	Gore Vent	9611994722	9611994722	9611994722
12.1	1	Air-fitting, ø6mm	9611995678	9611995678	9611995678
	1	Air-fitting, 1/4"	9611995679	9611995679	9611995679
13	1	Cable gland PG9	9611995218	9611995218	9611995218
C		Cylinder, cpl.	9614080401	9614080401	9614080401
D		Screws and O-rings	9614180701	9614180701	9614180701
E		Rubber plugs with instruction	9614091201	9614091201	9614091201
32		Pressure sensor incl. cable for print	8010000700	8010000700	8010000700

900612/4

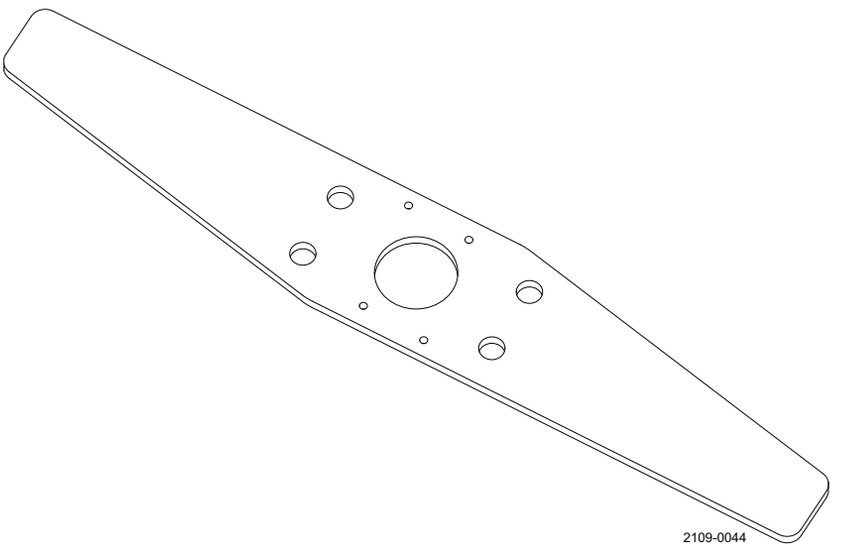
2109-0044

Pos	Qty	Denomination	
	1	Tool	9614193501

TD900628

1.3

Not manufactured anymore

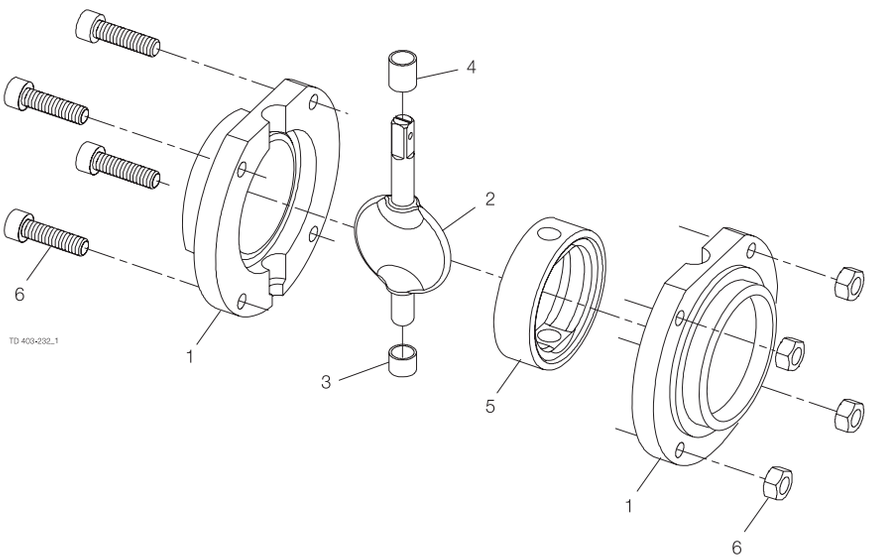

Pos		Qty	Denomination	DN 25 Disc □ 8	DN 40 Disc □ 8	DN 50 Disc □ 8	DN 65 Disc □ 8
1		2	Valve body half, (AISI 304) (Period 8103 -)	9611443640	9611443040	9611443050	9611443060
		2	Valve body half, (AISI 316L) (Period 8103 -)	9611443641	9611443041	9611443051	9611443061
2		1	Disc, (AISI 316L)	9611413681	9611411691	9611411771	9611411851
		1	Disc, 12 (AISI 316L) (Period 8906 -)				
		1	Disc, 10 (AISI 316) (Period 8001 - 8906)*				
3	□	1	Bush	9611411810	9611411730	9611411810	9611411890
4	□	1	Bush	9611413760	9611411730	9611411810	9611411890
5	□	1	Seal ring, (EPDM)	9611414130	9611414090	9611414100	9611414110
		1	Seal ring, (Silicone Q)	9611413720	9611411740	9611411820	9611411900
		1	Seal ring, (FPM)	9611414133	9611414093	9611414103	9611414113
		1	Seal ring, (HNBR)	9611414134	9611414094	9611414104	9611414114
		1	Seal ring, (PFA)		96119232021)	9612900601	9612900701
6		1	Set of screws, M6 + Nut M6	9611417340	9611417340		
		1	Set of screws, M8 + Nut M8			9611417350	9611417350

Pos		Qty	Denomination	DN 80 Disc □ 10	DN 100 Disc □ 10	DN 100 Disc □ 12	DN 150 Disc □ 15
1		2	Valve body half (AISI 304) (Period 8103 -)	9611443090	9611413080	9611413080	9611413670
		2	Valve body half (AISI 316L) (Period 8103 -)	9611443091	9611413081	9611413081	9611413671
2		1	Disc (AISI 316L)	9611412121			9611413701
		1	Disc, 12 (AISI 316L) (Period 8906 -)			9612046302	
		1	Disc, 10 (AISI 316) (Period 8001 - 8906)*		9611412011		
3	□	1	Bush	9611411970	9611412060	9611412060	9611413790
4	□	1	Bush	9611411970	9611412050	9611412050	9611413790
5	□	1	Seal ring (EPDM)	9611414160	9611414120	9611414120	9611414150
		1	Seal ring (Silicone Q)		9611412070	9611412070	9611413740
		1	Seal ring (FPM)		9611414123	9611414123	9611414153
		1	Seal ring (HNBR)		9611414124	9611414124	9611414154
		1	Seal ring (PFA)		9612900901	9612900901	
6		1	Set of screws M8 + Nut M8	9611417360			
		1	Set of screws M10 + Nut M10		9611417370	9611417370	9611417380

1) Seal-ring is delivered assembled with disc.

ISO-bore / DIN-connection DN 25 - DN 150
(Period 7600-8910)

Not manufactured anymore

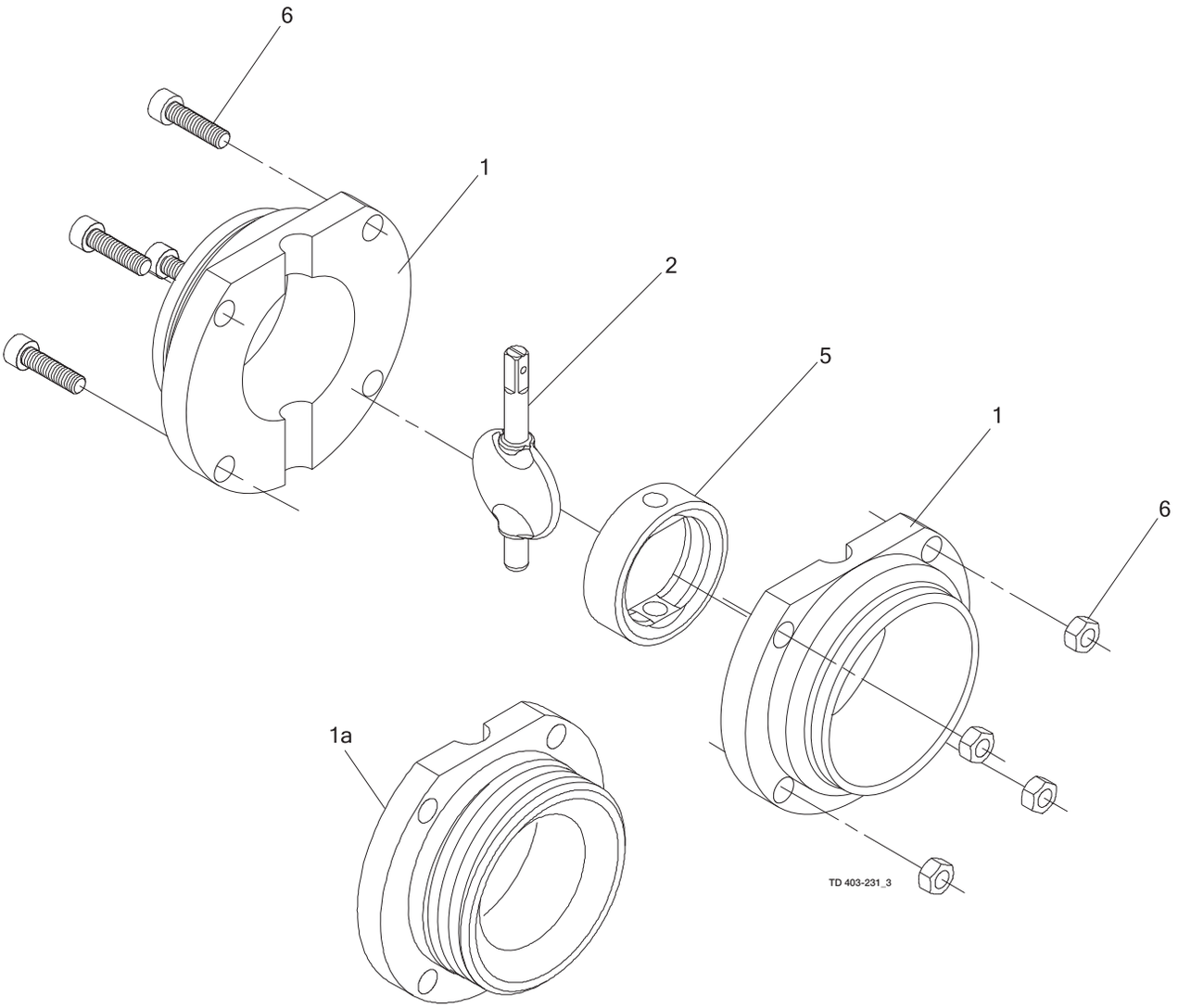

For valves without bushes (Period 8901-9212)

Pos	Qty	Denomination	DN 25 Disc □ 8	DN 32 Disc □ 8	DN 40 Disc □ 8	DN 50 Disc □ 8
1	2	Valve body half, welding (AISI 304)	9612072701	9612072801	9612072901	9612073001
	2	Valve body half, welding (AISI 316 L)	9612072702	9612072802	9612072902	9612073002
1a	2	Valve body half, male part (AISI 304)	9612061301	9612061901	9612061401	9612061501
	2	Valve body half, male part (AISI 316 L)	9612061302	9612061902	9612061402	9612061502
2	1	Disc (AISI 316L)	9612073604	9612073704	9612073804	9612073904
5	1	Seal ring, (EPDM)	9612070001	9612070101	9612070201	9612070301
	1	Seal ring, (Silicone Q)	9612070901	9612071001	9612071101	9612071201
	1	Seal ring, (FPM)	9612071801	9612071901	9612072001	9612072101
6	1	Set screw, M6 + Nut M6	9611417340	9611417340	9611417340	
	1	Set screw, M8 + Nut M8				9611417350
	1	Set screw, M10 + Nut M10				
	1	Set screw, M10 + Nut M10 (6 pos.)				

Pos	Qty	Denomination	DN 65 Disc □ 10	DN 80 Disc □ 10	DN 100 Disc □ 12	DN 125 Disc □ 14
1	2	Valve body half, welding (AISI 304)	9612073101	9612073201	9612073301	9612077401
	2	Valve body half, welding (AISI 316 L)	9612073102	9612073202	9612073302	9612077402
1a	2	Valve body half, male part (AISI 304)	9612061601	9612061701	9612061801	9612077201
	2	Valve body half, male part (AISI 316 L)	9612061602	9612061702	9612061802	9612077202
2	1	Disc (AISI 316L)	9612074004	9612074104	9612074204	9612076904
5	1	Seal ring, (EPDM)	9612070401	9612070501	9612070601	9612077101
	1	Seal ring, (Silicone Q)	9612071301	9612071401	9612071501	9612078301
	1	Seal ring, (FPM)	9612072201	9612072301	9612072401	9612078401
6	1	Set screw, M6 + Nut M6				
	1	Set screw, M8 + Nut M8	9611417360	9611417360		
	1	Set screw, M10 + Nut M10			9611417370	
	1	Set screw, M10 + Nut M10 (6 pos.)			9611417770	

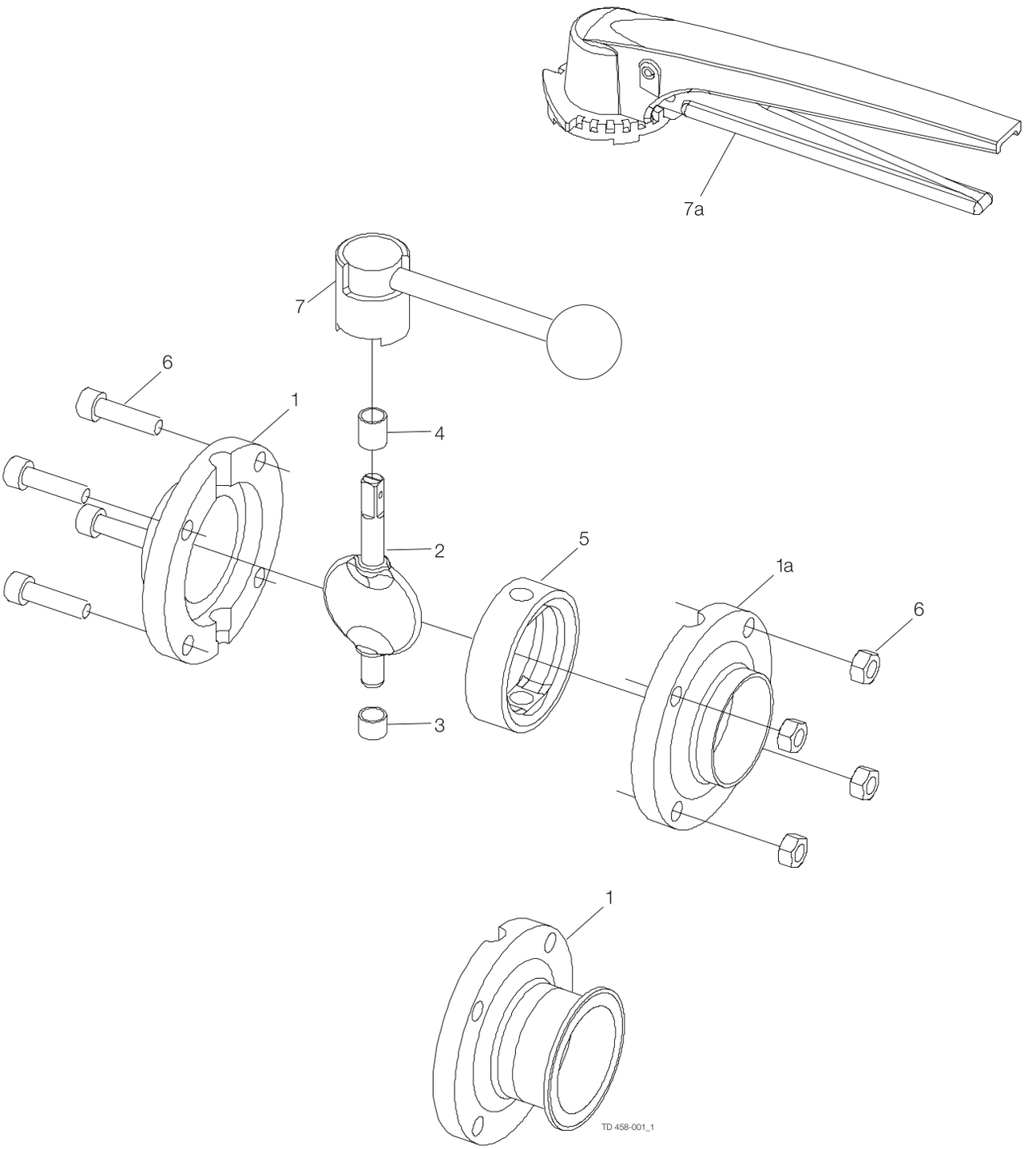
7a
7
6
1
4
2
5
1a
6
3
1
TD 458-001_1

Pos		Qty	Denomination	25 mm	38 mm	51 mm	63.5 mm	76.1 mm	101.6 mm
1		2	Valve body half, clamp						
1a		2	Valve body half, welding Please order new complete valve						
2		1	Disc Please order new complete valve						
3	□	1	Bush						
		1	Bush, set (10 pcs.)	9614464002	9614464001	9614464002	9614464003	9614464004	9614464006
4	□	1	Bush						
		1	Bush, set (10 pcs.)	9614464007	9614464007	9614464007	9614464003	9614464004	9614464005
5	□	1	Seal ring, (EPDM)						
6		1	Set screw, M6 + nut M6	9611417340	9611417340				
		1	Set screw, M8 + nut M8			9611417350	9611417350	9611417360	9611417360
7		1	Handle						
7a		1	Lockable multiposition handle (only ISO) Please order new complete valve						

Pos		Qty	Denomination	DN25	DN40	DN50	DN65	DN80	DN100
1a		2	Valve body half, welding Please order new complete valve						
2		1	Disc Please order new complete valve						
		1	Bush, set (10 pcs.)	9614464002	9614464001	9614464002	9614464003	9614464004	9614464006
		1	Bush, set (10 pcs.)	9614464007	9614464007	9614464007	9614464003	9614464004	9614464005
6		1	Set screw, M6 + nut M6	9611417340	9611417340				
		1	Set screw, M8 + nut M8			9611417350	9611417360	9611417360	
		1	Set screw, M10 + nut M10						9611417370
7		1	Handle Please order new complete valve						

		25 mm	38 mm	51 mm	63.5 mm	76.1 mm	101.6 mm
Service Kits for product wetted parts, ISO							
□	Service kit EPDM	9611923028	9611923204	9611923205	9611923031	9611923032	9611923033

		DN25	DN40	DN50	DN65	DN80	DN100
Service Kits for product wetted parts, DIN							
□	Service kit EPDM	9611923206	9611923207	9611923208	9611923079	9611923209	9611923218

Parts marked with □ are included in the service kits.
Recommended spare parts: Service kits.

TD 900-204/4

Not manufactured anymore

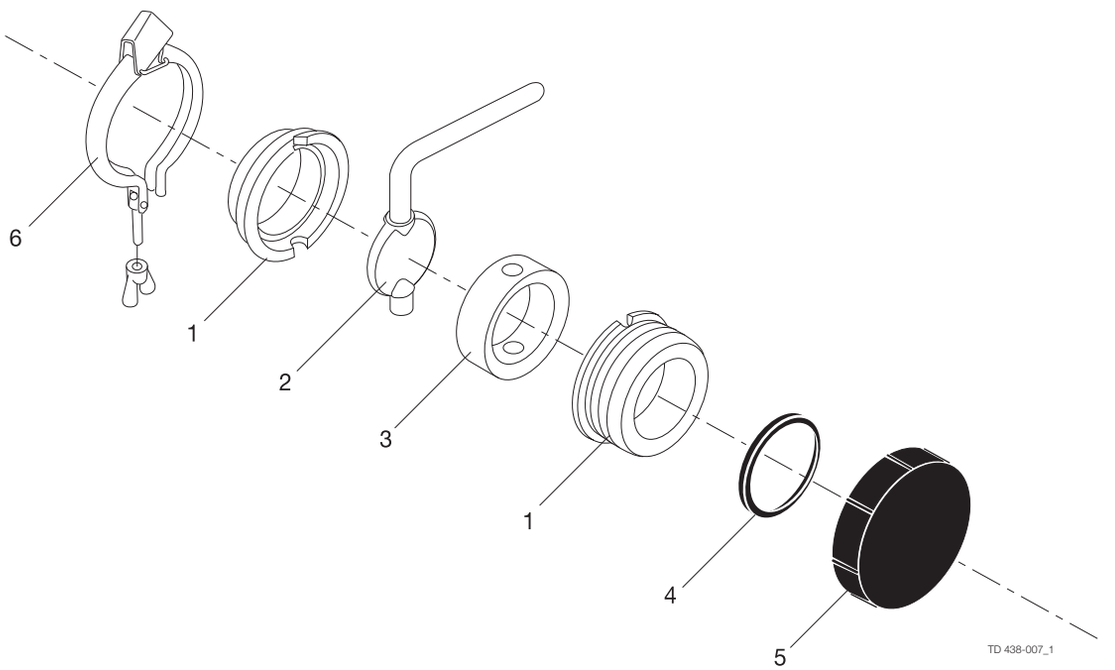

Pos	Qty	Denomination	
1	1	Valve body, half, male - 3A	
		Valve body, half, Clamp	
		Valve body, half, male - SMS	
		Valve body, half, expanding end - ISO	
		Valve body, half, male - DIN, DN 50	
		Valve body, half, male - DIN, DN 40	
		Valve body, half, welding end - ISO	
		Valve body, half, male - DS	
		Valve body, half, male - BS	
		Valve body, half, welding end - DIN, DN 50	
2	1	Disc	9611411250
3	1	Seal ring, - Sillicone (Std.)	9611411820
		Seal ring, - EPDM	9611414100
		Seal ring, - FPM	9611414103
4	1	Seal ring, - SMS, NBR	190604
		Seal ring, - SMS, EPDM	3131703785
		Seal ring, - DIN, DN 40, NBR	52734606
		Seal ring, - DIN, DN 40, EPDM	9611991271
		Seal ring, - DIN, DN 50, NBR	52734607
		Seal ring, - DIN, DN 50, EPDM	9611991272
		Seal ring, - DS, NBR	9611990122
		Seal ring, - BS, NBR	9611990147
5	1	End cap, - SMS	9611413540
		End cap, - DIN, DN 50	9611413550
		End cap, - DS	9611413560
		End cap, - BS	
		End cap, - DIN, DN 40	9611413610
		End cap, - 3A	
6	1	Clamp-ring	9611310710

Recommended spare parts: Pos. 3, 4.

900-435

Not manufactured anymore

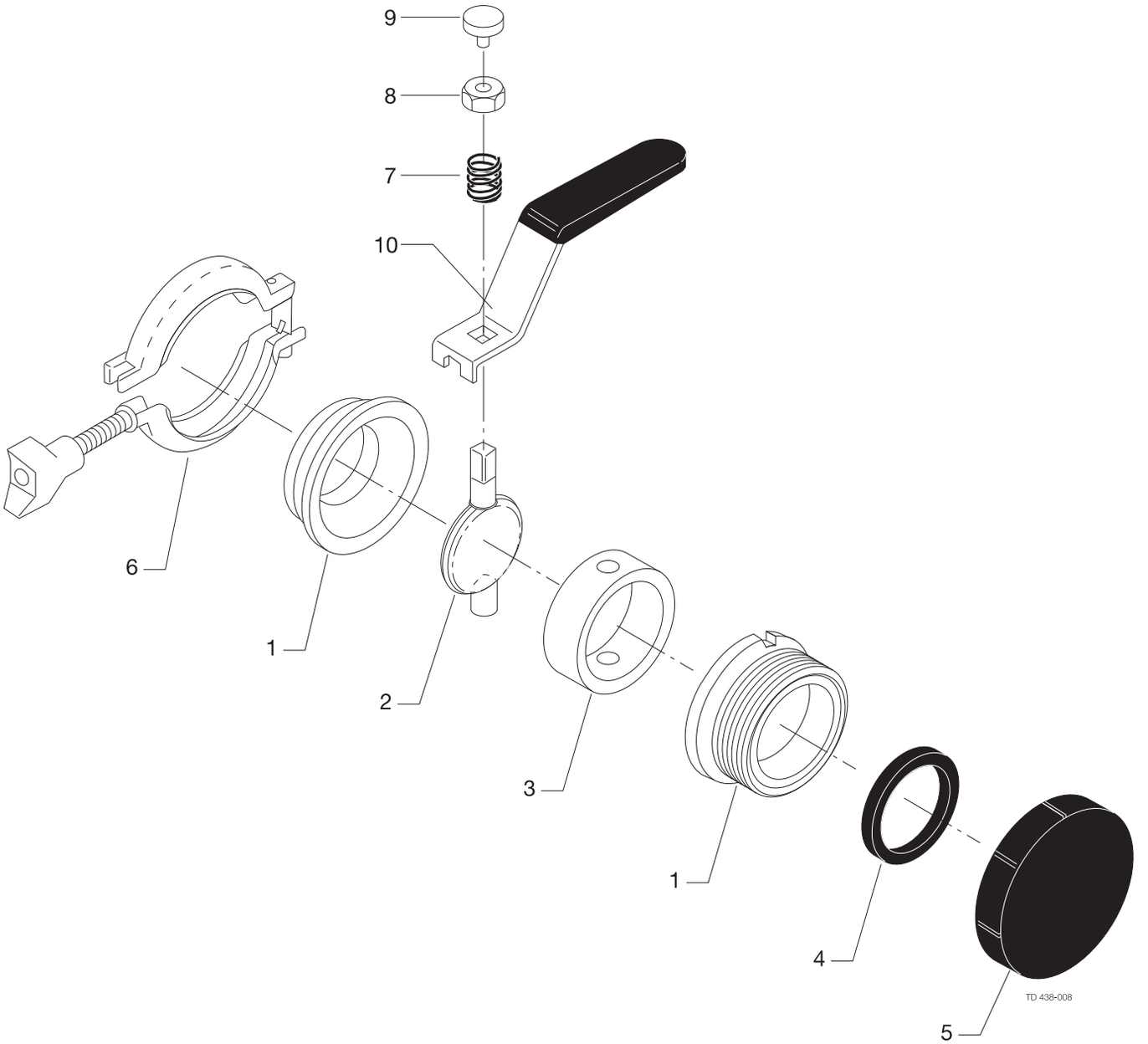

Pos	Qty	Denomination	
1	1	Valve body, half, male - 3A	
	1	Valve body, half, Clamp	
	1	Valve body, half, male - SMS	
	1	Valve body, half, expanding end - ISO	
	1	Valve body, half, male - DIN, NW 50	
	1	Valve body, half, welding end - ISO	
	1	Valve body, half, male - DS	
	1	Valve body, half, male - BS	
	1	Valve body, half, welding end - DIN, NW 50	
2	1	Disc	
3	1	Seal ring, - Sillicone (Std.)	9611411820
	1	Seal ring, - EPDM	9611414100
	1	Seal ring, - FPM	9611414103
4	1	Seal ring, - SMS, NBR	190604
	1	Seal ring, - SMS, EPDM	3131703785
	1	Seal ring, - DIN, NBR	52734607
	1	Seal ring, - DIN, EPDM	9611991272
5	1	End cap, - SMS	
	1	End cap, - DIN	
	1	End cap, - DS	
	1	End cap, - BS	
	1	End cap, - 3A	
6	1	Clampring	
7	1	Spring	
8	1	Spring cover	
9	1	Thumb screw	
10	1	Handle with PVC grip	

Recommended spare parts: Pos. 3, 4, 7, 8, 9.

900-449

Not manufactured anymore

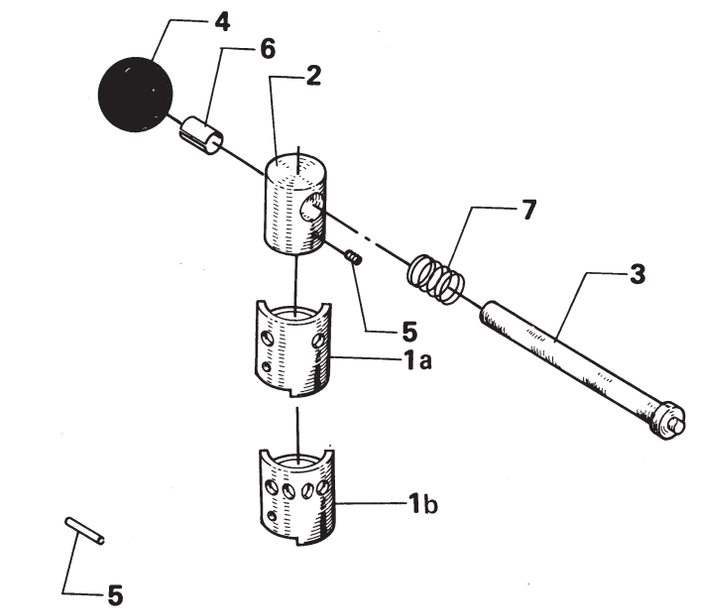

Pos	Qty	Denomination		38-51 mm + 63.5 mm NW 40-50-65	76-101.6 mm NW 80-110
			2 pos	9611411360	9611411370
			4 pos.	9611411361	9611411372
1a	1	Location cap with 2 pos.		9611411380	9611411430
1b	1	Location cap with 4 pos.		9611417390	9611417400
2	1	Transfer block for M5 , (Period 8011 - 8112)			
	1	Transfer block for M8, (Period 8201 - 8801)			
3	1	Handle bar		9611411400	9611411401
4	1	Ball			
5	1	Pointed screw, M5 x 6 (Period 8011 - 8112)		9611990296	9611990296
	1	Pointed screw, M8 x 8 (Period 8201 - 8801)		9611991699	9611991699
	1	Connex-pin (Period 7501 - 8008)			
6	1	Limit ring			
7	2	Spring			

Not manufactured anymore

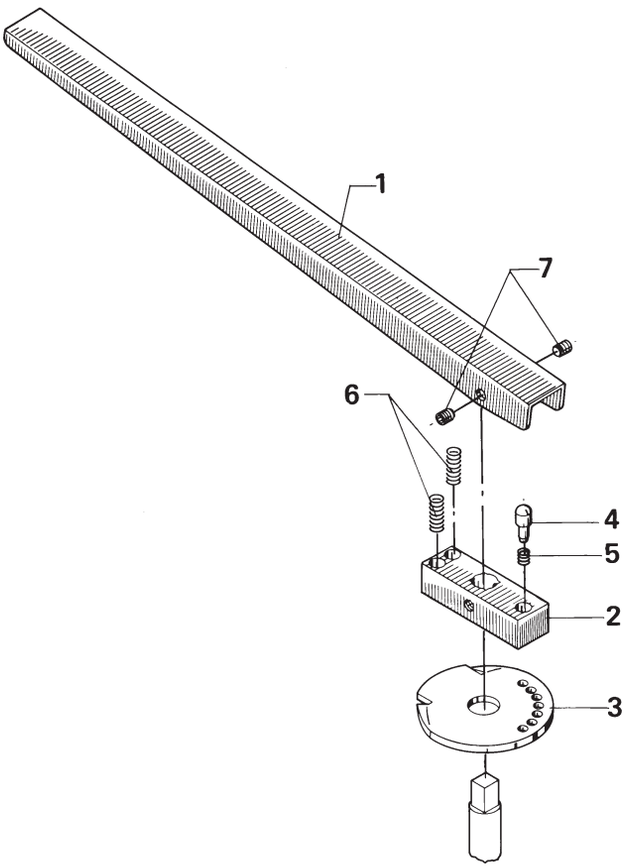

Mark I

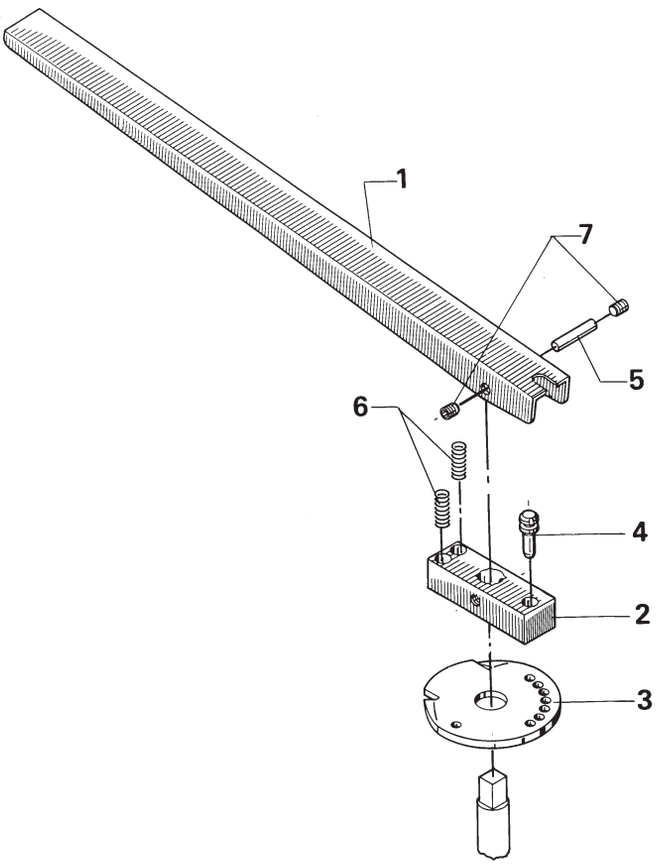

Mark II

Pos	Qty	Denomination	Mark I 9611416580 (Period 8110-8309)	Mark II 9611416580 (Period 8309-)
1	1	Handle bar		
2	2	Transfer block		
3	1	Position plate		
4	1	Detent pin		
5	1	Spring		
	1	Notch pin		
6	2	Spring		
7	2	Threadet pin		

Not manufactured anymore

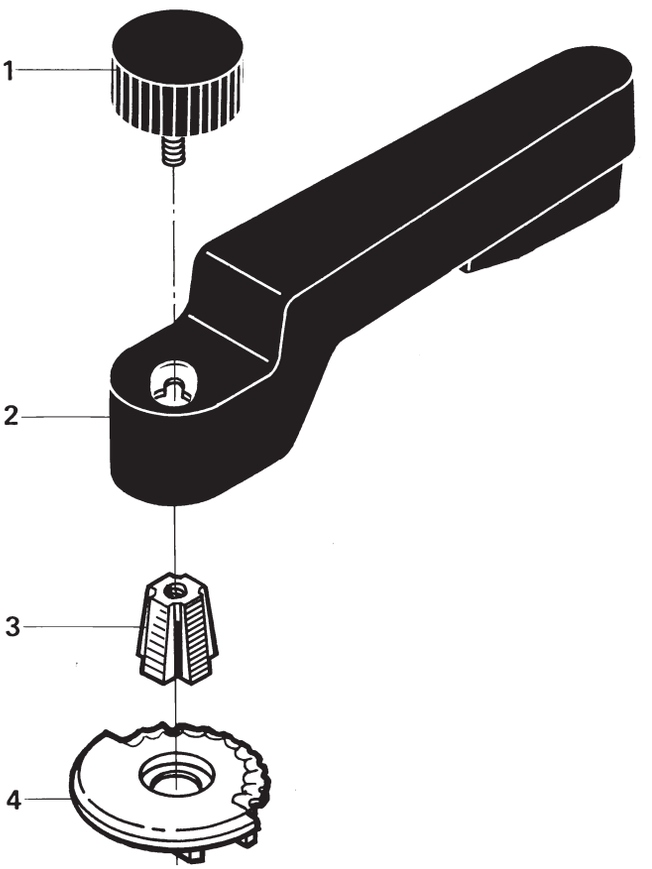

Pos	Qty	Denomination	961240001 ø8 mm	961240002 ø10 mm
1	1	Locking screw		
2	1	Handle		
3	1	Quadrangle spacer bushing		
4	1	Bracket for positioning		

Recommended spare parts: Pos. 3

Not manufactured anymore

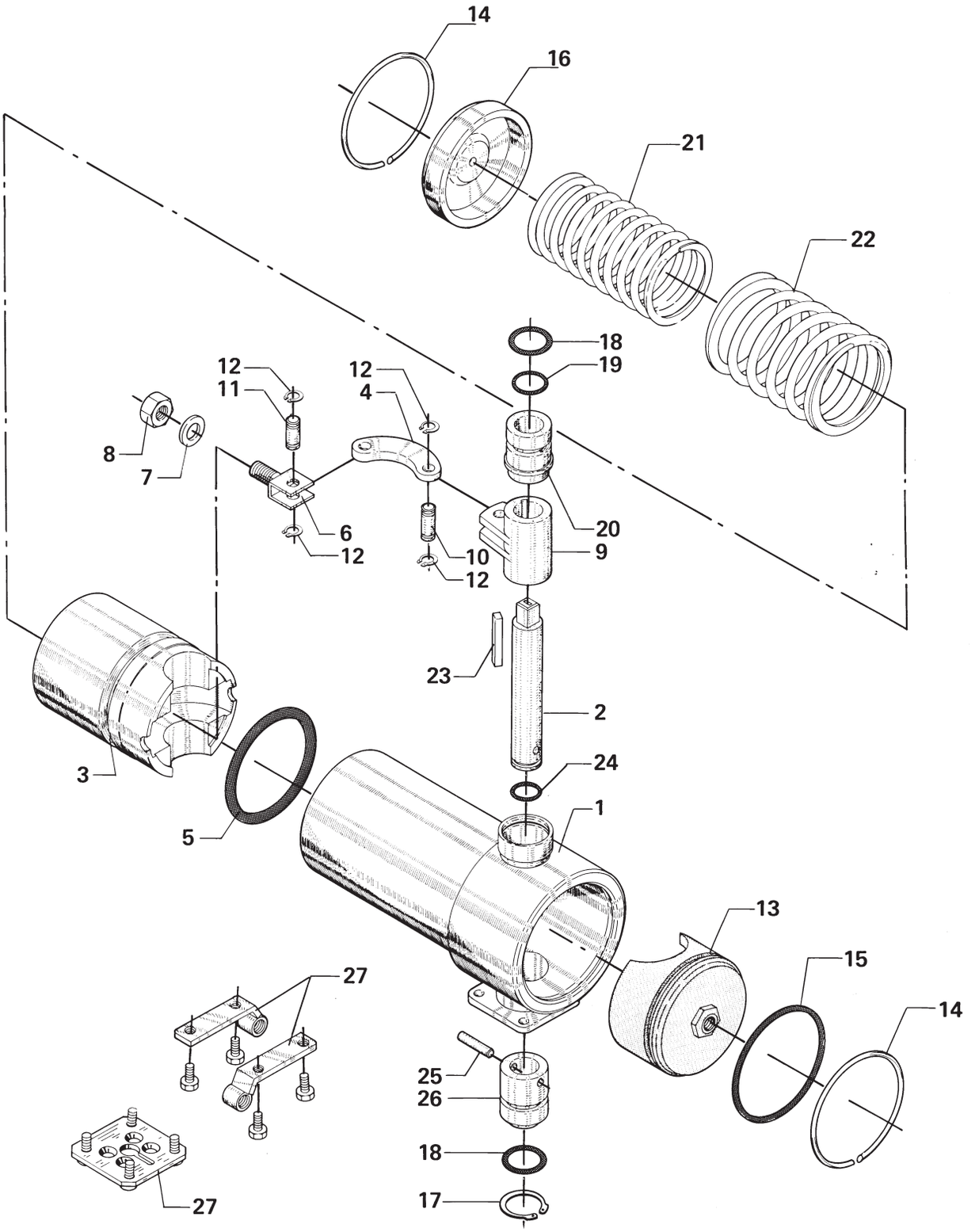

Pos	Qty	Denomination	9611410530 38-51-63.5 mm NW 40-NW 50-NW 65
AISI 304			
1	1	Air Cylinder	
2	1	Shaft	
3	1	Piston	
4	1	Strap plate	
5	1	O-ring, NBR	9611990052
6	1	Yoke	
7	1	Washer	9611990786
8	1	Safety nut	
9	1	Moment arm	
10	1	Long pin	
11	1	Short pin	
12	4	Seegerring	
13	1	End cover	
14	2	Retaining ring	9611402021
15	1	O-ring, NBR	9611990396
16	1	End cover	
17	1	Seegerring	
18	2	O-ring, NBR	9611990398
19	1	O-ring, NBR	9611990088
20	1	Bronze bearing	
21	1	Spring - ø5.5 mm	
22	1	Spring - ø6.5 mm	
23	1	Fitted key lock	
24	1	O-ring, NBR	
25	1	Connex pin	
26	1	Bronze bearing	
27	1	Mounting size - 38 mm - NW 40, (1 set)	
	1	Mounting size - 51 mm - NW 50, (1 set)	
	1	Mounting size - 63.5mm - NW 65, (1 set)	
	1	Mounting plate (Period 7501-7902)	
	4	Cheese head screw, M6x16	
	1	Bush	9611411730
	4	Countersunk screw M6x8	
	4	Nut, M6	9611990252

Recommended spare parts: Pos. 5, 15, 18, 19.

Not manufactured anymore

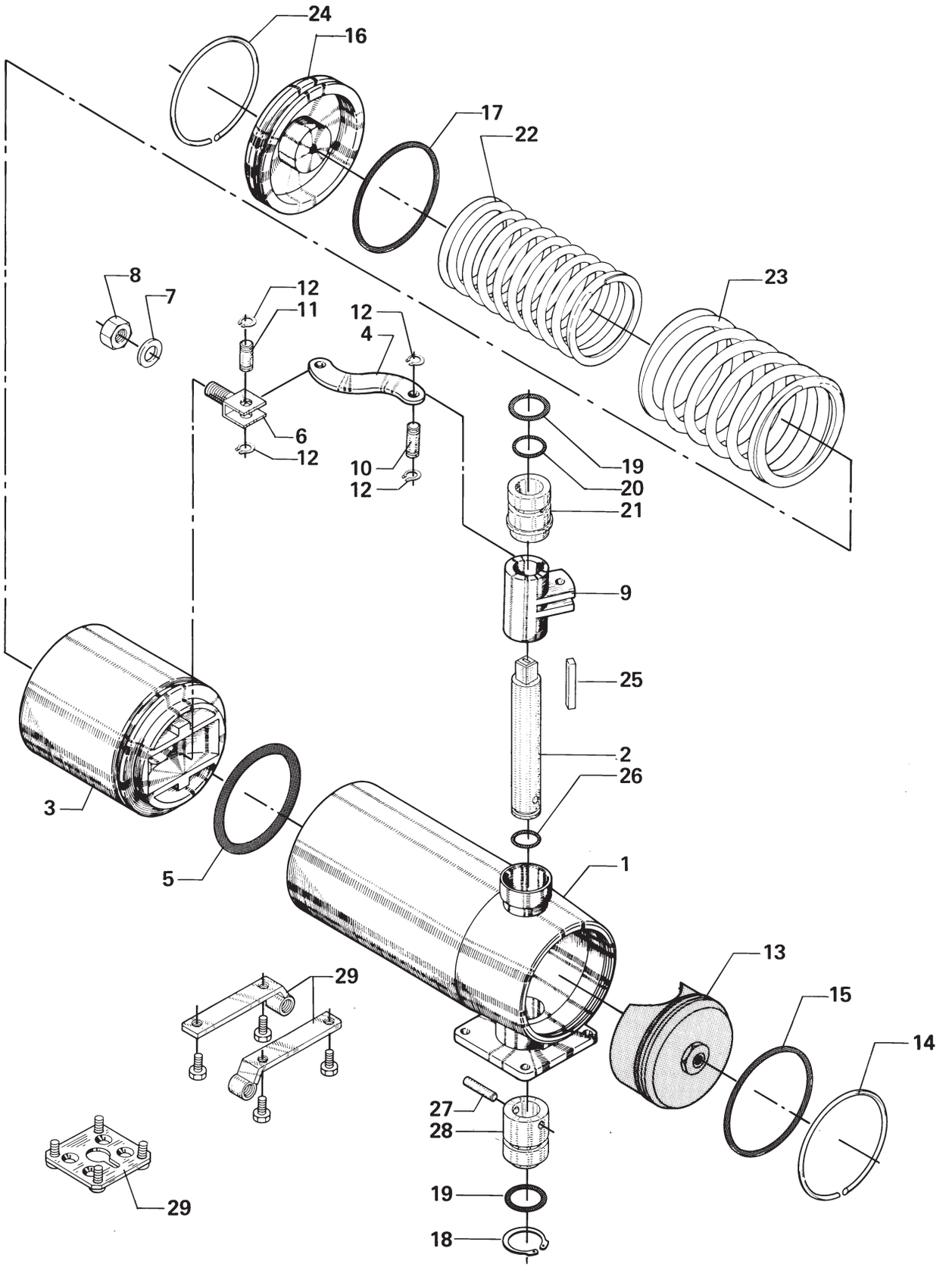

Pos	Qty	Denomination	961141397 76 - 101.6 mm NW 80-NW 100
1	1	Air Cylinder	
2	1	Shaft	
3	1	Piston	
4	1	Strap plate	
5	1	O-ring, NBR	
6	1	Yoke	
7	1	Washer	9611990786
8	1	Safety nut	
9	1	Moment arm	
10	1	Long pin	
11	1	Short pin	
12	4	Seegerring	
13	1	End cover	
14	1	Retaining ring	9611402021
15	1	O-ring, NBR	9611990396
16	1	End cover	
17	1	O-ring, NBR	
18	1	Seegerring	
19	2	O-ring, NBR	9611990398
20	1	O-ring, NBR	9611990088
21	1	Bronze bearing	
22	1	Spring - ø5.5 mm	
23	1	Spring - ø6.5 mm	
24	1	Retaining ring	
25	1	Fitted key lock	
26	1	O-ring, NBR	
27	1	Connex pin	
28	1	Bearing	
29	1	Mounting size - 76 mm, (1 set)	
	1	Mounting size - NW80, (1 set)	
	1	Mounting size - NW 100-101.6 mm, (1 set)	
	1	Mounting plate (Period 7501-7902)	
	4	Cheese head screw, M6 x 16	
	1	Bush	
	4	Countersunk screw M6 x 10	
	4	Nut, M6	9611990252

Recommended spare parts: pos. 5, 15, 19, 20.

2017/04

Not manufactured anymore

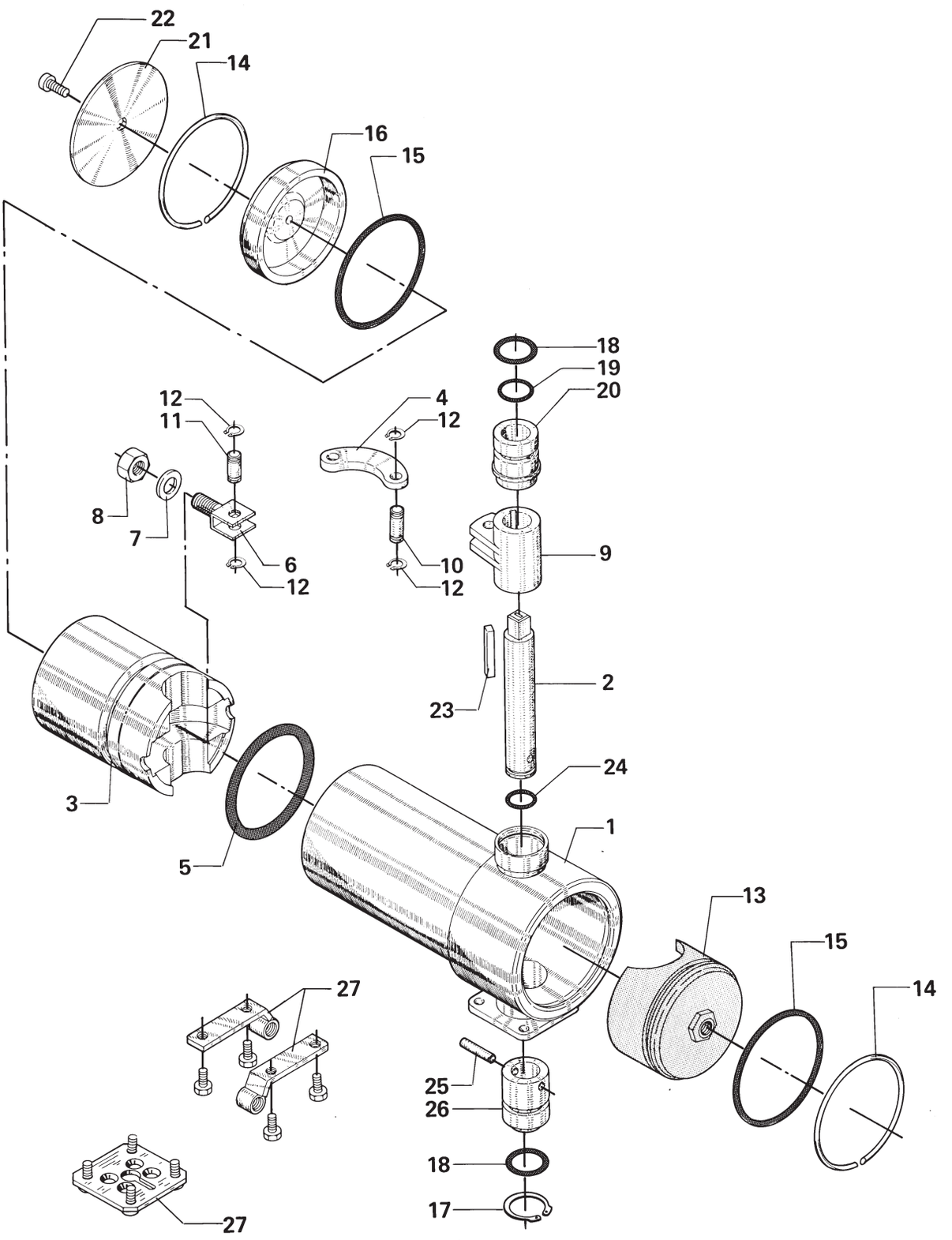

Pos	Qty	Denomination	961141435 38-51-63.5 mm NW 40-NW 50-NW 65
AISI 304			
1	1	Air Cylinder	
2	1	Shaft	
3	1	Piston (Hostaform)	
4	1	Strap plate	
5	1	O-ring, NBR	9611990052
	1	K-ring (Period 7506-7711)	
6	1	Yoke	
7	1	Washer	9611990786
8	1	Safety nut	
9	1	Moment arm	
10	1	961141107	
11	1	961141108	
12	4	9611990784	
13	1	961141083	
14	2	9611402021	9611402021
15	2	O-ring, NBR	9611990396
16	1	End cover	
17	1	Seegerring	
18	2	O-ring, NBR	9611990398
19	1	O-ring, NBR	9611990088
20	1	Bronze bearing	
21	1	Retaining plate	9611414370
22	1	1/8" Thread-plug	9611991221
23	1	Fitted key lock	
24	1	O-ring, NBR	
25	1	Connex pin	
26	1	Bronze bearing	
27	1	Mounting size - 38 mm - NW 40, (1 set)	
	1	Mounting size - 51 mm - NW 50, (1 set)	
	1	Mounting size - 65.5 mm - NW 65, (1 set)	
	1	Mounting plate (Period 7501-7902)	
	4	Cheese head screw, M6 x 16	
	1	Bush	9611411730
	4	Countersunk screw M6 x 8	
	4	Nut, M6	9611990252

Recommended spare parts: pos. 5, 15, 19.

Not manufactured anymore

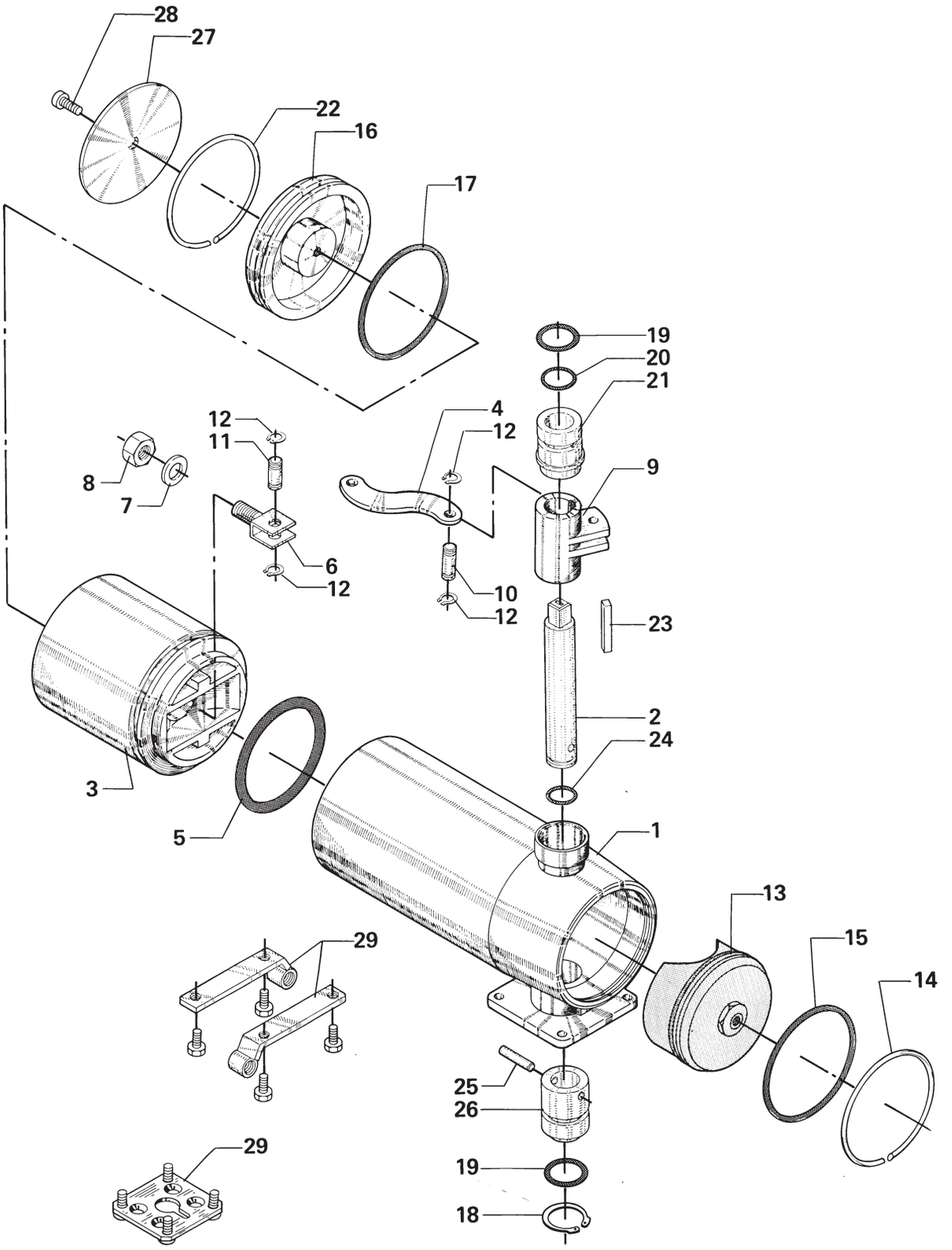

Pos	Qty	Denomination	9611414360 76 - 101.6 mm NW 80-NW 100
1	1	Air Cylinder	
2	1	Shaft	
4	1	Strap plate	
5	1	O-ring, NBR	
6	1	Yoke	
7	1	Washer	9611990786
8	1	Safety nut	
9	1	Moment arm	
10	1	Long pin	
11	1	Short pin	
12	4	Seegerring	
13	1	End cover	
14	1	Retaining ring	9611402021
15	1	O-ring, NBR	9611990396
16	1	End cover	
17	1	O-ring, NBR	
18	1	Seegerring	
19	2	O-ring, NBR	9611990398
20	1	O-ring, NBR	9611990088
21	1	Bronze bearing	
22	1	Retaining ring	
23	1	Fitted key lock	
24	1	O-ring, NBR	
25	1	Connex pin	
26	1	Bronze bearing	
27	1	Retaining plate	
28	1	Thread-plug	9611991221
29	1	Mounting size - 76 mm, (1 set)	
	1	Mounting size - NW80, (1 set)	
	1	Mounting size - NW100-101.6 mm, (1 set)	
	1	Mounting plate (Period 7501-7902)	
	4	Cheese head screw, M6 x 16	
	1	Bush	
	4	Countersunk screw M6 x 10	
	4	Nut, M6	9611990252

Recommended spare parts: pos. 5, 19, 20.

2017/04

Not manufactured anymore

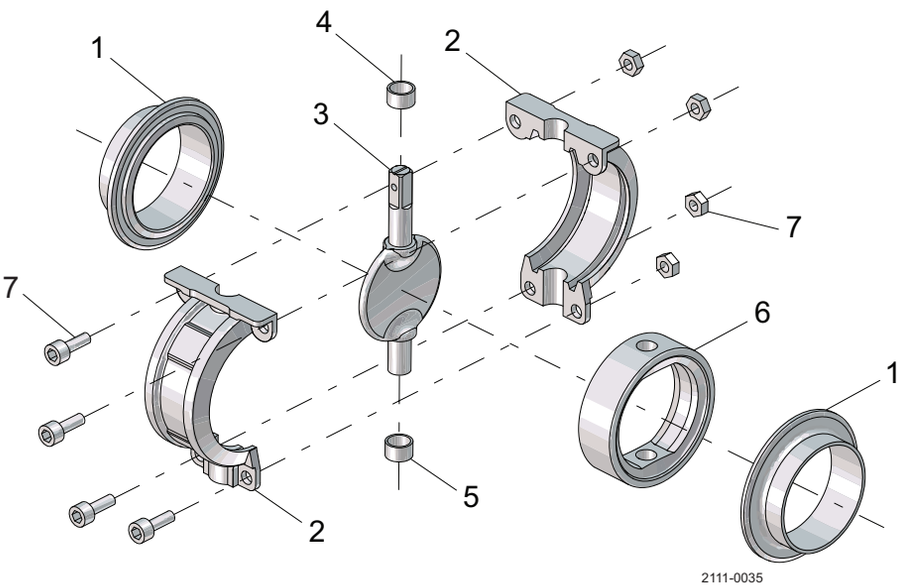

Pos		Qty	Denomination	25 mm □8	38 mm □8	51 mm □8	63.5 mm □8	76 mm □10	101.6 mm □12
1		2	Valve body half, AISI 304L	9613862401	9613862501	9613862601	9613862701	9613862801	9613862901
		2	Valve body half, AISI 316L	9613862402	9613862502	9613862602	9613862702	9613862802	9613862902
2		2	Clamp, 304	9613861801	9613861901	9613862001	9613862101	9613862201	9613862301
3		1	Disc, AISI 304	9611413680	9611411690	9611411770	9611411850	9611411930	9612046301
		1	Disc, AISI 316	9611413681	9611411691	9611411771	9611411851	9611411931	9612046302
4	▲	1	Bush	9611411810	9611411730	9611411810	9611411890	9611411970	9611412060
5	▲	1	Bush	9611413760	9611411730	9611411810	9611411890	9611411970	9611412050
6	▲	1	Seal ring, EPDM	9611414130	9611414090	9611414100	9611414110	9611414060	9611414120
		1	Seal ring, Silicone Q	9611413720	9611411740	9611411820	9611411900	9611411980	9611412070
		1	Seal ring, Viton FPM	9611414133	9611414093	9611414103	9611414113	9611414063	9611414123
		1	Seal ring, HNBR	9611414134	9611414094	9611414104	9611414114	9611414064	9611414124
7		1	Screws and nuts set	9613868801	9613868801	9613868801	9613868802	9613868802	9613868803

Service kits

		25 mm □8	38 mm □8	51 mm □8	63.5 mm □8	76 mm □10	101.6 mm □12
▲	**Service kit, EPDM**	**9611923365**	**9611923366**	**9611923367**	**9611923368**	**9611923369**	**9611923370**
▲	**Service kit, Q**	**9611923371**	**9611923372**	**9611923373**	**9611923374**	**9611923375**	**9611923376**
▲	**Service kit, FPM**	**9611923377**	**9611923378**	**9611923379**	**9611923380**	**9611923381**	**9611923382**
▲	**Service kit, HNBR**	**9611923383**	**9611923384**	**9611923385**	**9611923386**	**9611923387**	**9611923388**

Parts marked with ▲ are included in the service kits.
Recommended spare parts: Service kits.

Not manufactured anymore

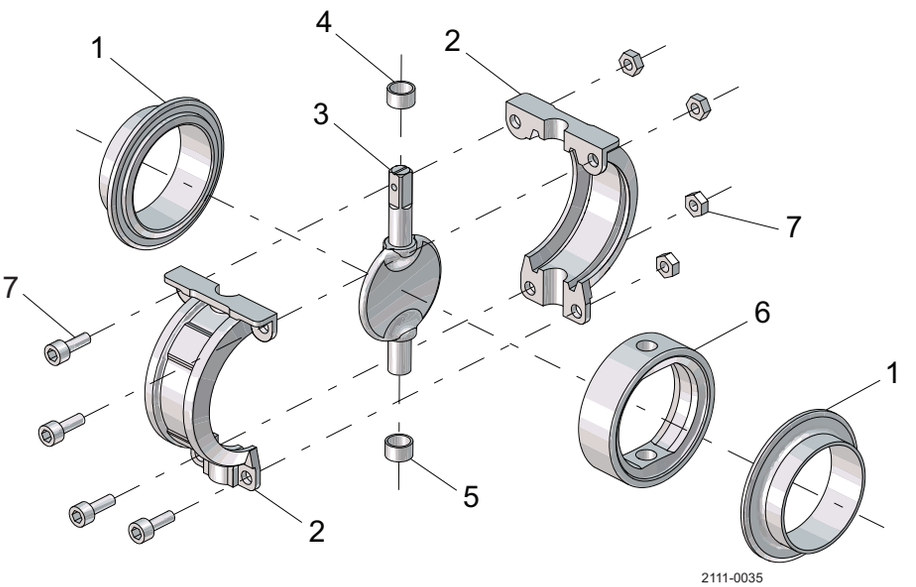

Pos		Qty	Denomination	DN25 □8	DN40 □8	DN50 □8	DN65 □8	DN80 □10	DN100 □12
1		2	Valve body half, welding, AISI 304L	9613867401	9613867601	9613867701	9613867801	9613867901	9613868001
		2	Valve body half, welding, AISI 316L	9613867402	9613867602	9613867702	9613867802	9613867902	9613868002
2		2	Clamp , 304	9613866701	9613866901	9613867001	9613867101	9613867201	9613867301
3		1	Disc, AISI 304L	9612073604	9612073804	9612073904	9612074004	9612074104	9612074204
4	•	1	Bush	9611411810	9611411810	9611411890	9611411890	9611411890	9611411970
5	•	1	Bush	9611411810	9611411810	9611411890	9611411890	9611411890	9611411970
6	•	1	Seal ring, EPDM	9612070001	9612070201	9612070301	9612070401	9612070501	9612070601
		1	Seal ring, Silicone Q	9612070901	9612071101	9612071201	9612071301	9612071401	9612071501
		1	Seal ring, FPM	9612071801	9612072001	9612072101	9612072201	9612072301	9612072401
		1	Seal ring , HNBR	9612070002	9612070202	9612070302	9612070402	9612070502	9612070602
7		1	Screws and nuts set	9613868801	9613868801	9613868801	9613868802	9613868802	9613868803

Service kits

		DN25 □8	DN40 □8	DN50 □8	DN65 □8	DN80 □10	DN100 □12
•	**Service kit, EPDM**	**9611923389**	**9611923390**	**9611923391**	**9611923392**	**9611923393**	**9611923394**
•	**Service kit, Q**	**9611923395**	**9611923396**	**9611923397**	**9611923398**	**9611923399**	**9611923400**
•	**Service kit, FPM**	**9611923401**	**9611923402**	**9611923403**	**9611923404**	**9611923405**	**9611923406**
•	**Service kit, HNBR**	**9611923407**	**9611923408**	**9611923409**	**9611923410**	**9611923411**	**9611923412**

Parts marked with • are included in the service kits.
Recommended spare parts: Service kits.

1.4 Control/check valves

The non-return valve LKC-2 is designed for use in hygienic installations to prevent reverse product flow.





Spare parts

LKC-2 non-return valve, ISO 1.4.130
LKC-2 non-return valve, DIN 1.4.132
LKC-2 non-return valve, polished (US version) 1.4.136
LKC UltraPure, ISO 1.4.138
LKC UltraPure, DIN 1.4.140
LKUV-2 Air-Relief Valve 1.4.142
LKBV Airblow Valve 1.4.144
SB Self Cleaning CO2 Valve 1.4.146
62-174 Air Blow Check Valve 1.4.148
62-326 Air Blow Check Valve, hi volume 1.4.150
45BYMP ball check 1.4.152
C45MP check valve, sizes ½" and ¾" 1.4.154
C45MPS check valve, sizes ½" and ¾" 1.4.156
Level Controllers, 30-101-316/30-102-316 . . . . . 1.4.158
Level Controllers, 30-103-316/30-104-316 . . . . . 1.4.160

Spare parts for obsolete products

LKC-1 Non-return Valve 1.4.162
LKC Non-return Valve for expanding, AISI 304 . . . . . 1.4.164
LKC Non-return Valve for welding, AISI 304 and AISI 316 . . . . . 1.4.166
LKUV-1 Air Release Valve 1.4.168
LKUV Air Release Valve 1.4.170
LKSV Float valve 1.4.172
PRV Pressure Relief Valve 1.4.174

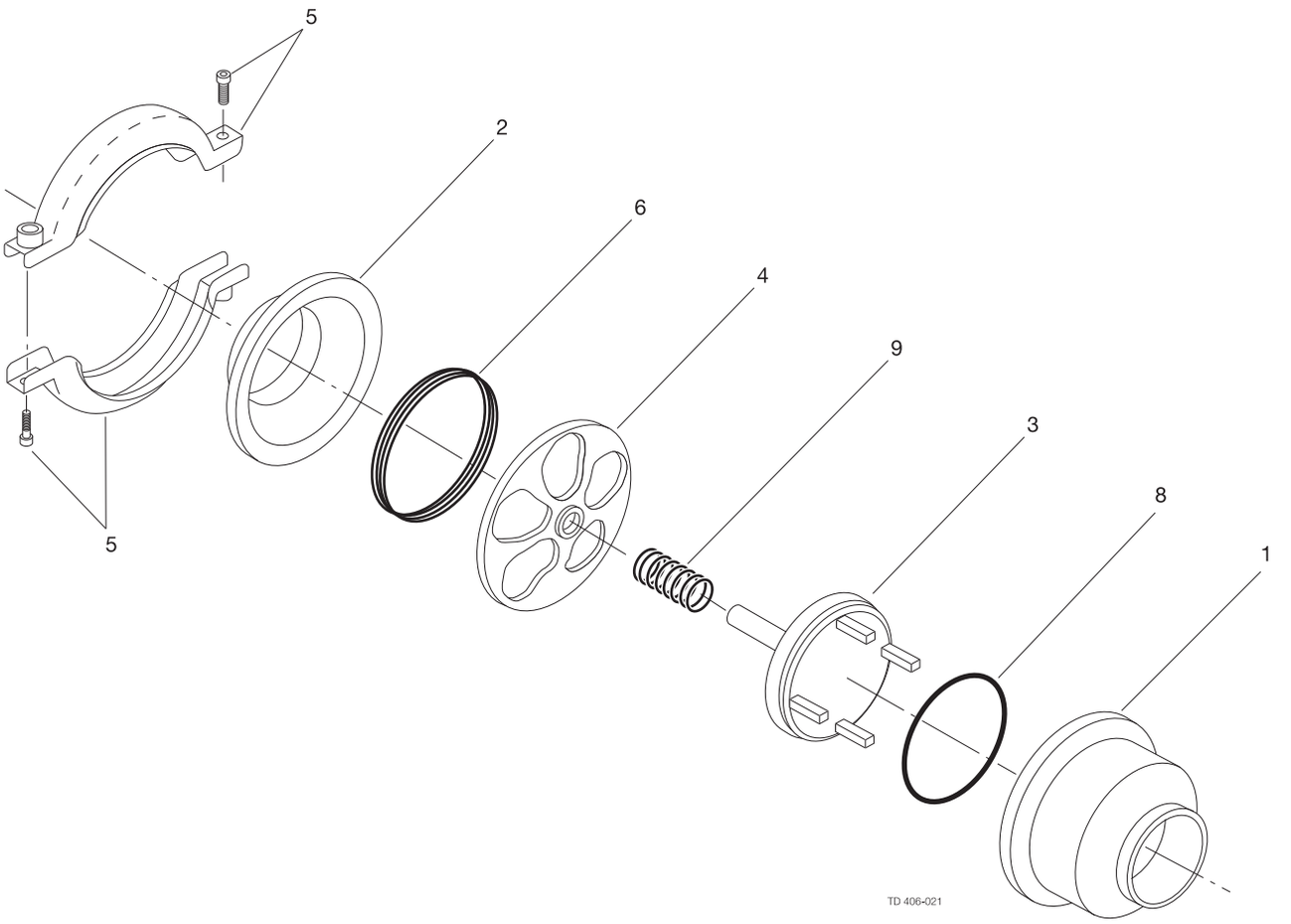
5
2
6
4
9
3
8
1
5
TD 406-021

ISO for welding - AISI 316L

Pos		Qty	Denomination	DN/OD 25	DN/OD 38	DN/OD 51	DN/OD 63.5	DN/OD 76.1	DN/OD 101.6
1		1	Valve body, vertical	9612220207	9612220208	9612220209	9612220210	9612220211	9612220212
1.1		1	Valve body, horizontal	Contact Alfa Laval	Contact Alfa Laval	Contact Alfa Laval	Contact Alfa Laval	Contact Alfa Laval	N/A
2		1	Welding liner, vertical	9612220107	9612220108	9612220109	9612220110	9612220111	9612220112
2.1		1	Welding liner, horizontal	Contact Alfa Laval	Contact Alfa Laval	Contact Alfa Laval	Contact Alfa Laval	Contact Alfa Laval	N/A
3		1	Valve cone	9612220701	9612220702	9612220703	9612220704	9612220705	9612220706
4		1	Guide plate , vertical (period 1202-)	9612370901	9612370902	9612370903	9612370904	9612370905	9612370906
		1	Guide plate with pin , (period - 1202)						
4.1		1	Guide plate, horizontal	Contact Alfa Laval	Contact Alfa Laval	Contact Alfa Laval	Contact Alfa Laval	Contact Alfa Laval	N/A
5		1	Clamp ring	9611311052	9611311053	9611311054	9611311055	9611311056	9611311057
6	□	1	Seal ring, EPDM	9611253150	9611253151	9611253152	9611253153	9611253154	9611253156
		1	Seal ring, NBR	9611253810	9611253811	9611253812	9611253813	9611253814	9611253816
		1	Seal ring, FPM	9611253820	9611253821	9611253822	9611253823	9611253824	9611253826
8	□	1	O-ring, EPDM	9611990063	9611990015	9611990064	9611990065	9611990066	9611990067
		1	O-ring, NBR	9611991410	9611991411	9611991412	9611991413	9611991414	9611991415
		1	O-ring, FPM	9611991417	9611991418	9611991419	9611991420	9611991421	9611991422
9	□	1	Spring	9611991677	9611991678	9611991679	9611991680	9611991681	9611992031

ISO for welding - AISI 304

Pos		Qty	Denomination	DN/OD 25	DN/OD 38	DN/OD 51	DN/OD 63.5	DN/OD 76.1	DN/OD 101.6
1		1	Valve body, vertical	9612220201	9612220202	9612220203	9612220204	9612220205	9612220206
2		1	Welding liner	9612220101	9612220102	9612220103	9612220104	9612220105	9612220106
3		1	Valve cone	9612220701	9612220702	9612220703	9612220704	9612220705	9612220706
4		1	Guide plate , (period 1202 -)	9612370901	9612370902	9612370903	9612370904	9612370905	9612370906
		1	Guide plate with pin , (period - 1202)						
5		1	Clamp ring	9611311052	9611311053	9611311054	9611311055	9611311056	9611311057
6	□	1	Seal ring, EPDM	9611253150	9611253151	9611253152	9611253153	9611253154	9611253156
		1	Seal ring, NBR	9611253810	9611253811	9611253812	9611253813	9611253814	9611253816
		1	Seal ring, FPM	9611253820	9611253821	9611253822	9611253823	9611253824	9611253826
8	□	1	O-ring, EPDM	9611990063	9611990015	9611990064	9611990065	9611990066	9611990067
		1	O-ring, NBR	9611991410	9611991411	9611991412	9611991413	9611991414	9611991415
		1	O-ring, FPM	9611991417	9611991418	9611991419	9611991420	9611991421	9611991422
9	□	1	Spring	9611991677	9611991678	9611991679	9611991680	9611991681	9611992031

		DN/OD 25	DN/OD 38	DN/OD 51	DN/OD 63.5	DN/OD 76.1	DN/OD 101.6
Service kit for product wetted parts LKC-2							
□	**Service kit EPDM**	9611924005	9611924006	9611924007	9611924008	9611924009	9611924010
□	**Service kit NBR**	9611924011	9611924012	9611924013	9611924014	9611924015	9611924016
□	**Service kit FPM**	9611924017	9611924018	9611924019	9611924020	9611924021	9611924022

		DN/OD 25	DN/OD 38	DN/OD 51	DN/OD 63.5	DN/OD 76.1	DN/OD 101.6
Service kit for product wetted parts LKC-UP							
□	**Service kit EPDM**	9611924202	9611924203	9611924204	9611924205	9611924206	9611924207
□	**Service kit FPM**	9611924280	9611924281	9611924282	9611924283	9611924284	9611924285

Parts marked with □ are included in the service kit.

NB: Following parts from LKC-2 are interchangeable with LKC-1 for size 25 mm to 76 mm.
Pos. 3 Valve cone
Pos. 4 Guide plate

Recommended spare parts: Service kits.

TD 900-203/2

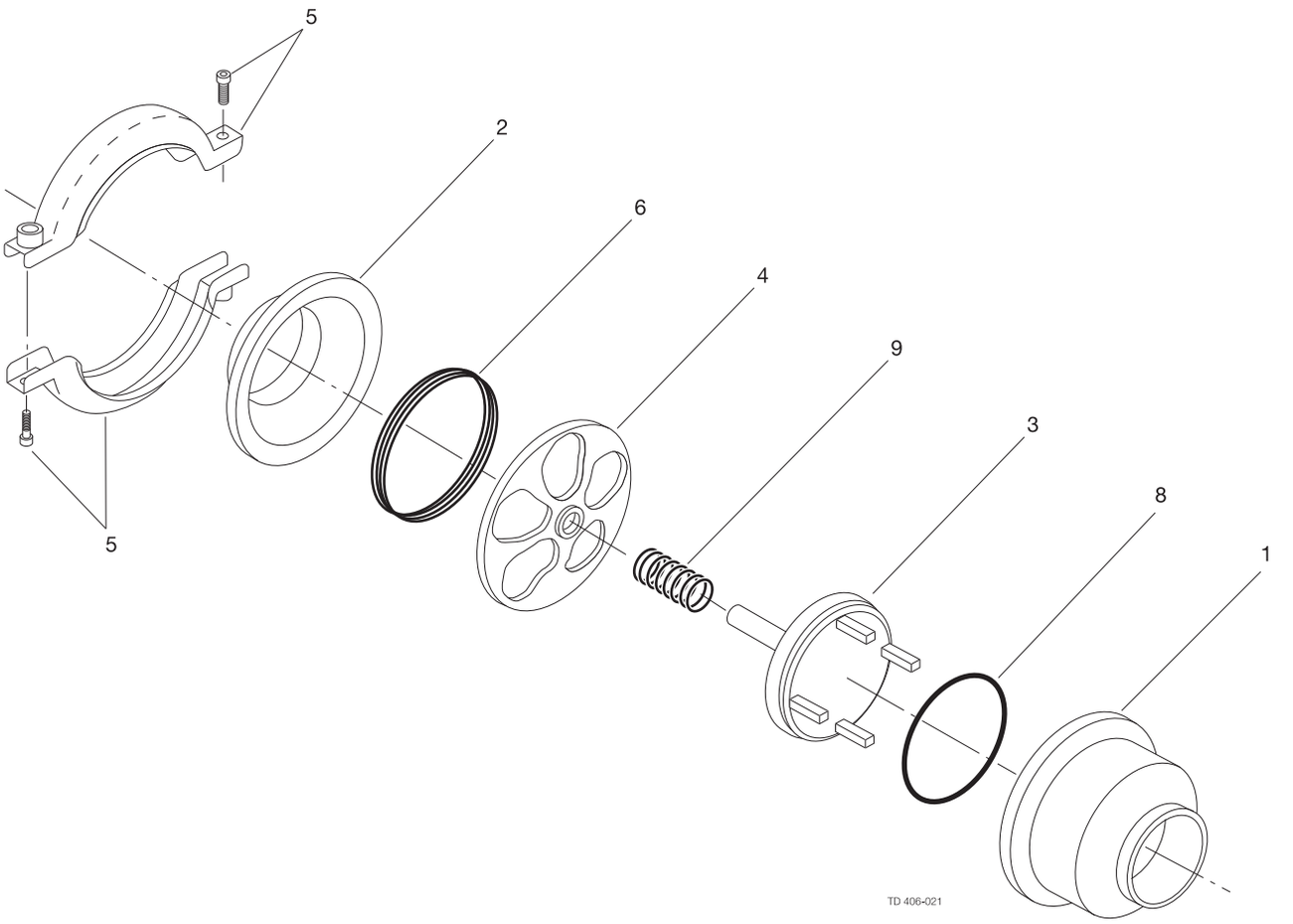
5
2
6
4
9
3
8
1
5
TD 406-021

DIN for welding - AISI 316L

Pos		Qty	Denomination	DN 25	DN 32	DN 40	DN 50	DN 65
1		1	Valve body	9612221408	9612221409	9612221410	9612221411	9612221412
2		1	Welding liner	9612221508	9612221509	9612221510	9612221511	9612221512
3		1	Valve cone	9612220701	9612220702	9612220702	9612220703	9612220704
4		1	Guide plate, (period 1202-)	9612370901	9612370902	9612370902	9612370903	9612370904
		1	Guide plate with pin, (period - 1202)					
5		1	Clamp ring	9611311052	9611311053	9611311053	9611311054	9611311055
6	□	1	Seal ring, EPDM	9611253150	9611253151	9611253151	9611253152	9611253153
		1	Seal ring, NBR	9611253810	9611253811	9611253811	9611253812	9611253813
		1	Seal ring, FPM	9611253820	9611253821	9611253821	9611253822	9611253823
8	□	1	O-ring, EPDM	9611990063	9611990015	9611990015	9611990064	9611990065
		1	O-ring, NBR	9611991410	9611991411	9611991411	9611991412	9611991413
		1	O-ring, FPM	9611991417	9611991418	9611991418	9611991419	9611991420
9	□	1	Spring	9611991677	9611991678	9611991678	9611991679	9611991680

Pos		Qty	Denomination	DN 80	DN 100
1		1	Valve body	9612221413	9612221414
2		1	Welding liner	9612221513	9612221514
3		1	Valve cone	9612220705	9612220706
4		1	Guide plate, (period 1202-)	9612370905	9612370906
		1	Guide plate with pin, (period - 1202)		
5		1	Clamp ring	9611311056	9611311057
6	□	1	Seal ring, EPDM	9611253154	9611253156
		1	Seal ring, NBR	9611253814	9611253816
		1	Seal ring, FPM	9611253824	9611253826
8	□	1	O-ring, EPDM	9611990066	9611990067
		1	O-ring, NBR	9611991414	9611991415
		1	O-ring, FPM	9611991421	9611991422
9	□	1	Spring	9611991681	9611992031

DIN for welding - AISI 304

Pos		Qty	Denomination	DN 25	DN 32	DN 40	DN 50	DN 65
1		1	Valve body	9612221401	9612221402	9612221403	9612221404	9612221405
2		1	Welding liner	9612221501	9612221502	9612221503	9612221504	9612221505
3		1	Valve cone	9612220701	9612220702	9612220702	9612220703	9612220704
4		1	Guide plate, (period 1202-)	9612370901	9612370902	9612370902	9612370903	9612370904
		1	Guide plate with pin, (period - 1202)					
5		1	Clamp ring	9611311052	9611311053	9611311053	9611311054	9611311055
6	□	1	Seal ring, EPDM	9611253150	9611253151	9611253151	9611253152	9611253153
		1	Seal ring, NBR	9611253810	9611253811	9611253811	9611253812	9611253813
		1	Seal ring, FPM	9611253820	9611253821	9611253821	9611253822	9611253823
8	□	1	O-ring, EPDM	9611990063	9611990015	9611990015	9611990064	9611990065
		1	O-ring, NBR	9611991410	9611991411	9611991411	9611991412	9611991413
		1	O-ring, FPM	9611991417	9611991418	9611991418	9611991419	9611991420
9	□	1	Spring	9611991677	9611991678	9611991678	9611991679	9611991680

Pos		Qty	Denomination	DN 80	DN 100
1		1	Valve body	9612221406	9612221407
2		1	Welding liner	9612221506	9612221507
3		1	Valve cone	9612220705	9612220706
4		1	Guide plate, (period 1202-)	9612370905	9612370906
		1	Guide plate with pin, (period - 1202)		
5		1	Clamp ring	9611311056	9611311057
6	□	1	Seal ring, EPDM	9611253154	9611253156
		1	Seal ring, NBR	9611253814	9611253816
		1	Seal ring, FPM	9611253824	9611253826
8	□	1	O-ring, EPDM	9611990066	9611990067
		1	O-ring, NBR	9611991414	9611991415
		1	O-ring, FPM	9611991421	9611991422
9	□	1	Spring	9611991681	9611992031

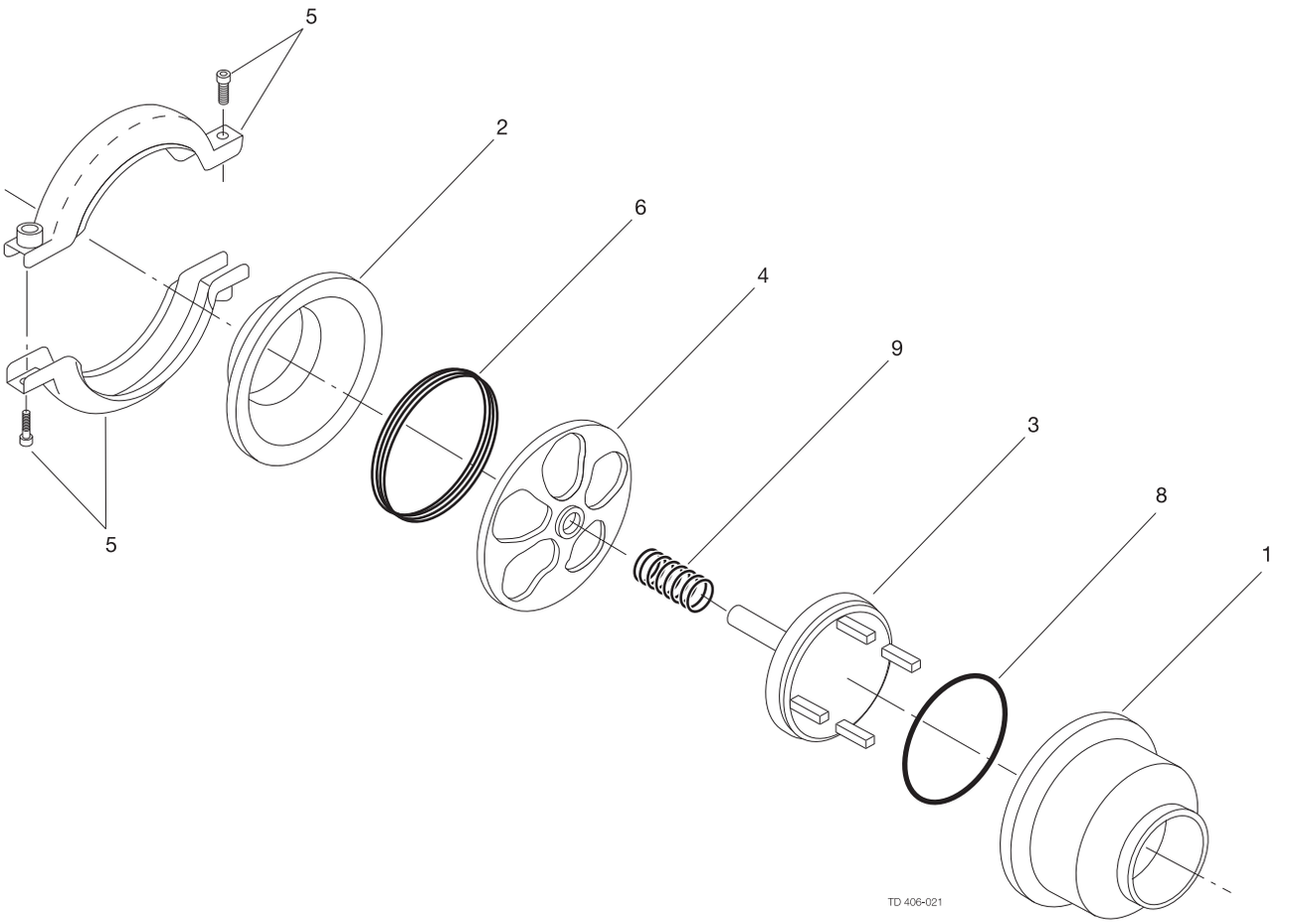
5
2
6
4
9
3
8
1
5
TD 406-021

	DN 25	DN 32	DN 40	DN 50	DN 65	DN 80	DN 100
Service kit for product wetted parts							
□ Service kit EPDM	9611924005	9611924006	9611924006	9611924007	9611924008	9611924009	9611924010
□ Service kit NBR	9611924011	9611924012	9611924012	9611924013	9611924014	9611924015	9611924016
□ Service kit FPM	9611924017	9611924018	9611924018	9611924019	9611924020	9611924021	9611924022

	DN25	DN32	DN40	DN50	DN65	DN80	DN100
Service kit for product wetted parts LKC-UP							
□ Service kit EPDM	9611924202	9611924203	9611924203	9611924204	9611924205	9611924206	9611924207
□ Service kit FPM	9611924280	9611924281	9611924281	9611924282	9611924283	9611924284	9611924285

Parts marked with □ are included in the service kit.

NB: Following parts from LKC-2 are interchangeable with LKC-1 for size DN 25 to DN 80.
Pos. 3 Valve cone
Pos. 4 Guide plate

Recommended spare parts: Service kits.

TD 900-203/2

1.4

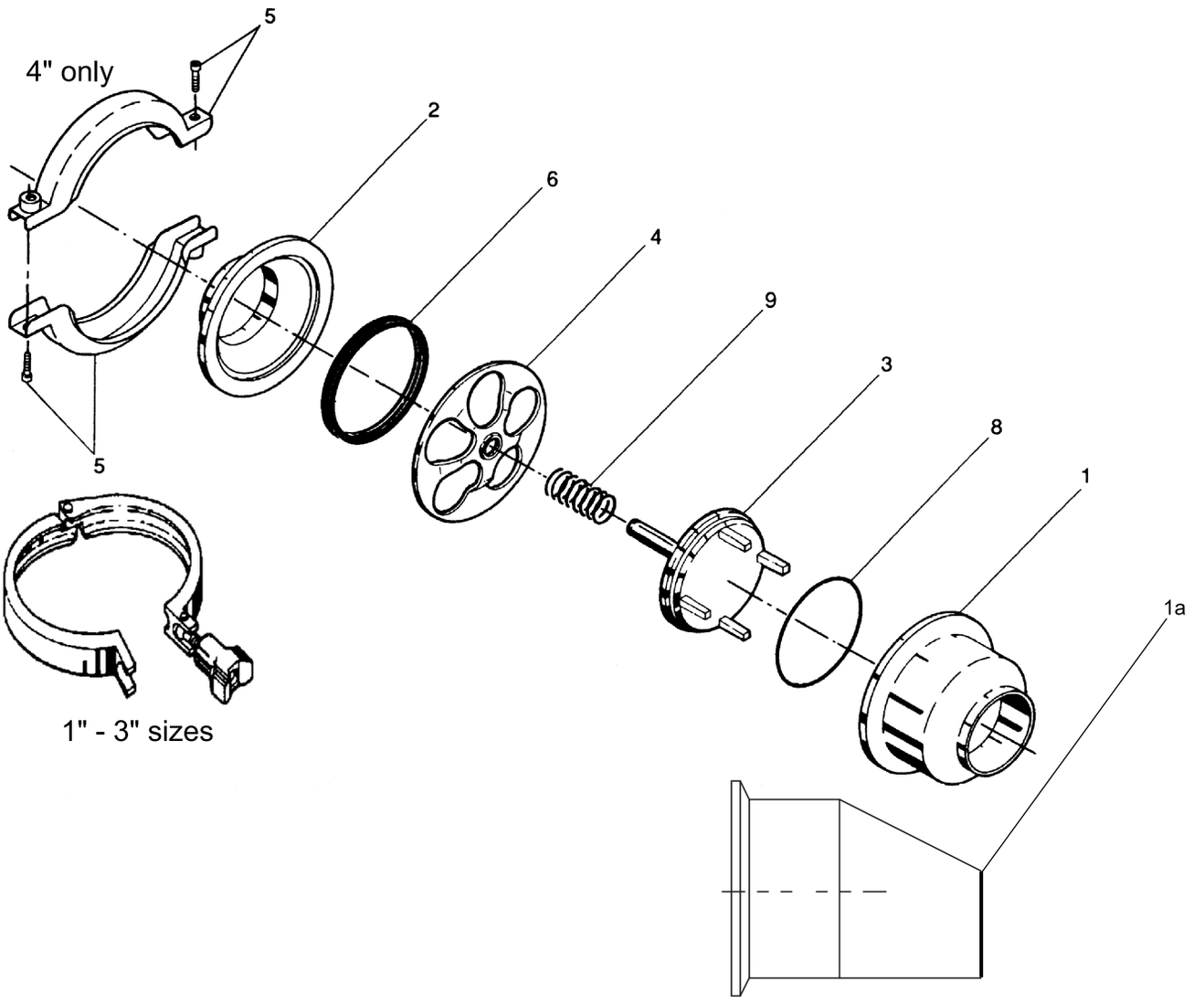

Pos		Qty	Denomination	1”	1 1/2”	2”	2 1/2”	3”	4”
Iso for welding - AISI 316									
1		1	Valve body, (Vertical)	Contact Alfa Laval	Contact Alfa Laval	Contact Alfa Laval	Contact Alfa Laval	Contact Alfa Laval	Contact Alfa Laval
		1	Valve body, (Horizontal)	Contact Alfa Laval	Contact Alfa Laval	Contact Alfa Laval	Contact Alfa Laval	Contact Alfa Laval	Contact Alfa Laval
2		1	Welding liner	Contact Alfa Laval	Contact Alfa Laval	Contact Alfa Laval	Contact Alfa Laval	Contact Alfa Laval	Contact Alfa Laval
3		1	Valve cone	9612220707	9612220708	9612220709	9612220710	9612220711	9612220712
4		1	Guide plate	9612220807	9612220808	9612220809	9612220810	9612220811	9612220812
5		1	Heavy duty clamp (1-3”) and Clamp ring (4”)	211054	211055	211056	211057	270267	9611311057
6	□	1	Seal ring, EPDM	9611253150	9611253151	9611253152	9611253153	9611253154	9611253156
	□	1	Seal ring, NBR	9611253810	9611253811	9611253812	9611253813	9611253814	9611253817
	□	1	Seal ring, FPM	9611253820	9611253821	9611253822	9611253823	961125384	9611253826
8	□	1	O-ring, EPDM	9611990063	9611990015	9611990064	9611990065	9611990066	9611990067
	□	1	O-ring, NBR	9611991410	9611991411	9611991412	9611991413	9611991414	9611991415
	□	1	O-ring, FPM	9611991417	9611991418	9611991419	9611991420	9611991421	9611991422
9		1	Spring	9611991778	9611991779	9611991780	9611991781	9611991782	9611991783

Parts marked with □ are included in the service kits.

Pos		Qty	Denomination	1”	1 1/2”	2”	2 1/2”	3”	4”
Iso for welding - AISI 304									
1		1	Valve body, (Vertical)	Contact Alfa Laval	Contact Alfa Laval	Contact Alfa Laval	Contact Alfa Laval	Contact Alfa Laval	Contact Alfa Laval
		1	Valve body, (Horizontal)	Contact Alfa Laval	Contact Alfa Laval	Contact Alfa Laval	Contact Alfa Laval	Contact Alfa Laval	Contact Alfa Laval
2		1	Welding liner	Contact Alfa Laval	Contact Alfa Laval	Contact Alfa Laval	Contact Alfa Laval	Contact Alfa Laval	Contact Alfa Laval
3		1	Valve cone	9612220707	9612220708	9612220709	9612220710	9612220711	9612220712
4		1	Guide plate	9612220807	9612220808	9612220809	9612220810	9612220811	9612220812
5		1	Heavy duty clamp (1-3”) and Clamp ring (4”)	211054	211054	211054	211054	211267	NA
6	□	1	Seal ring, EPDM	9611253150	9611253151	9611253152	9611253153	9611253154	9611253156
	□	1	Seal ring, NBR	9611253810	9611253811	9611253812	9611253813	9611253814	9611253816
	□	1	Seal ring, FPM	9611253820	9611253821	9611253822	9611253823	961125384	9611253826
8	□	1	O-ring, EPDM	9611990063	9611990015	9611990064	9611990065	9611990066	9611990067
	□	1	O-ring, NBR	9611991410	9611991411	9611991412	9611991413	9611991414	9611991415
	□	1	O-ring, FPM	9611991417	9611991418	9611991419	9611991420	9611991421	9611991422
9		1	Spring	9611991778	9611991779	9611991780	9611991781	9611991782	9611991783

Parts marked with □□ are included in the service kits.

		1”	1 1/2”	2”	2 1/2”	3”	4”
□	**Service kit for LKC-2, EPDM**	**9611924005**	**9611924006**	**9611924007**	**9611924008**	**9611924009**	**9611924010**
□	**Service kit for LKC-2, NBR**	**9611924011**	**9611924012**	**9611924013**	**9611924014**	**9611924015**	**9611924016**
□	**Service kit for LKC-2, FPM**	**9611924017**	**9611924018**	**9611924019**	**9611924020**	**9611924021**	**9611924022**

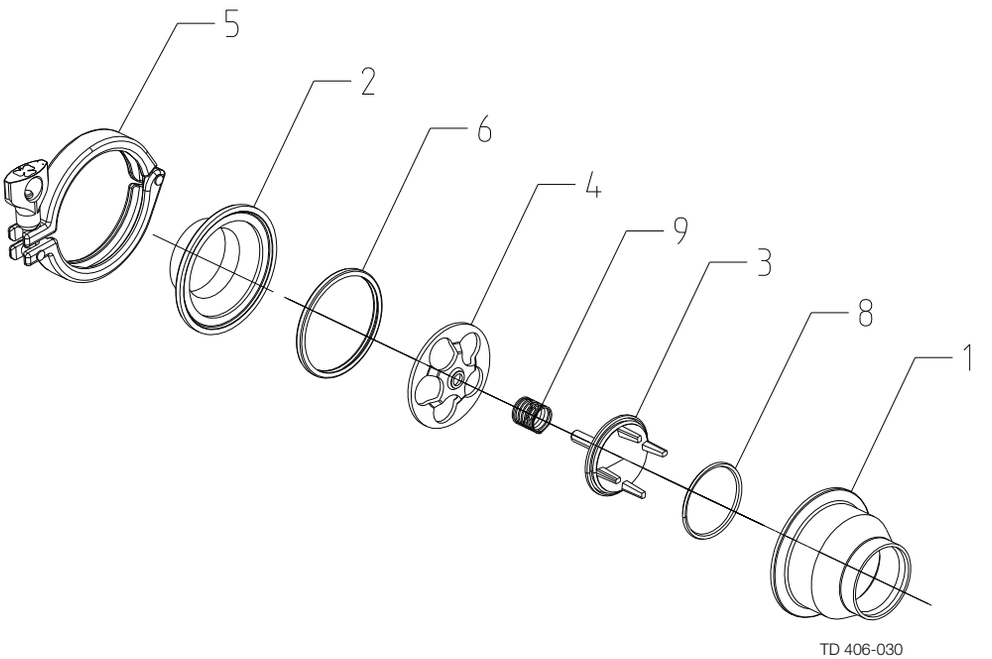
5
2
6
4
9
3
8
1
TD 406-030

Pos		Qty	Denomination	DN/OD 25	DN/OD 38	DN/OD 51	DN/OD 63.5	DN/OD 76.1	DN/OD 101.6
1		1	Valve body, welding ends						
2		1	Welding liner, welding ends						
3		1	Valve cone	9612220713	9612220714	9612220715	9612220716	9612220717	9612220718
4		1	Guide plate	9612370913	9612370914	9612370915	9612370916	9612370917	9612370918
5		1	Clamp ring	211054	211055	211056	211057	270267	9611311057
6	□	1	Seal ring, EPDM						
		1	Seal ring, FPM						
8	□	1	O-ring, EPDM						
		1	O-ring, FPM						
9	□	1	Spring						

	DN/OD 25	DN/OD 38	DN/OD 51	DN/OD 63.5	DN/OD 76.1	DN/OD 101.6
Service kits for product wetted parts						
□ Service kit EPDM	9611924202	9611924203	9611924204	9611924205	9611924206	9611924207
□ Service kit FPM	9611924280	9611924281	9611924282	9611924283	9611924284	9611924285

Parts marked with □ are included in service kits.

Recommended spare parts: Service kits.

TD900700/2

1.4

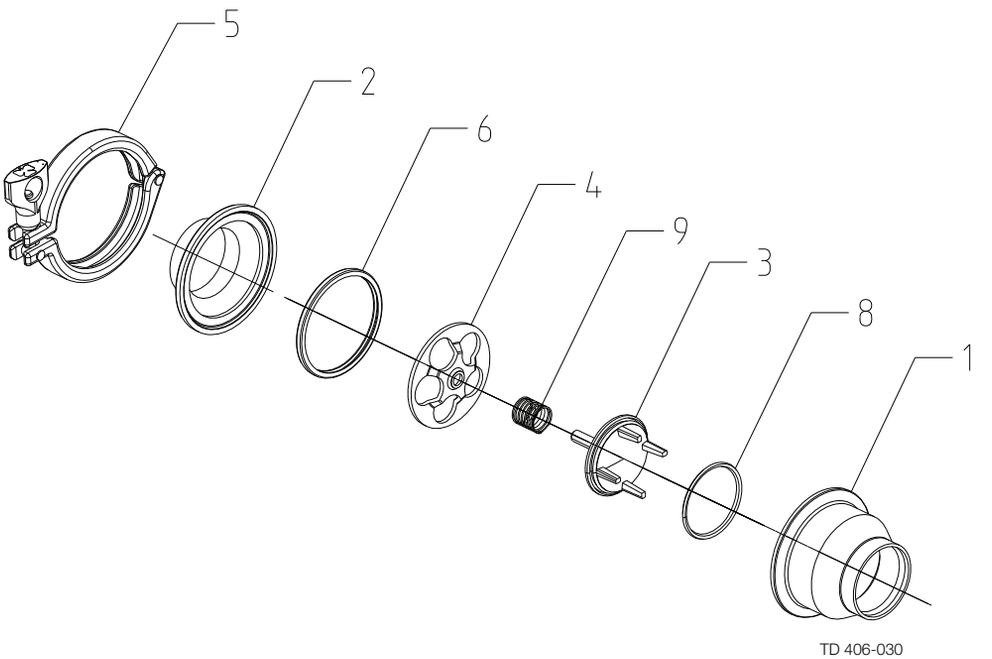

Pos		Qty	Denomination	DN 25	DN 32	DN 40
1		1	Valve body, welding ends			
2		1	Welding liner, welding ends			
3		1	Valve cone	9612220713	9612220714	9612220714
4		1	Guide plate	9612370913	9612370914	9612370914
5		1	Clamp ring	211054	211055	211055
6	□	1	Seal ring, EPDM			
		1	Seal ring, FPM			
8	□	1	O-ring, EPDM			
		1	O-ring, FPM			
9	□	1	Spring			

Pos		Qty	Denomination	DN 50	DN 65	DN 80	DN 100
1		1	Valve body, welding ends				
2		1	Welding liner, welding ends				
3		1	Valve cone	9612220715	9612220716	9612220717	9612220718
4		1	Guide plate	9612370915	9612370916	9612370917	9612370918
5		1	Clamp ring	211056	211057	270267	9611311057
6	□	1	Seal ring, EPDM				
		1	Seal ring, FPM				
8	□	1	O-ring, EPDM				
		1	O-ring, FPM				
9	□	1	Spring				

		DN 25	DN 32	DN 40
Service kits for product wetted parts				
□	**Service kit EPDM**	9611924202	9611924203	9611924203
□	**Service kit FPM**	9611924280	9611924281	9611924281

		DN 50	DN 65	DN 80	DN 100
Service kits for product wetted parts					
□	**Service kit EPDM**	9611924204	9611924205	9611924206	9611924207
□	**Service kit FPM**	9611924282	9611924283	9611924284	9611924285

Parts marked with □ are included in the service kits.
Recommended spare parts: Service kits.

900-700/2

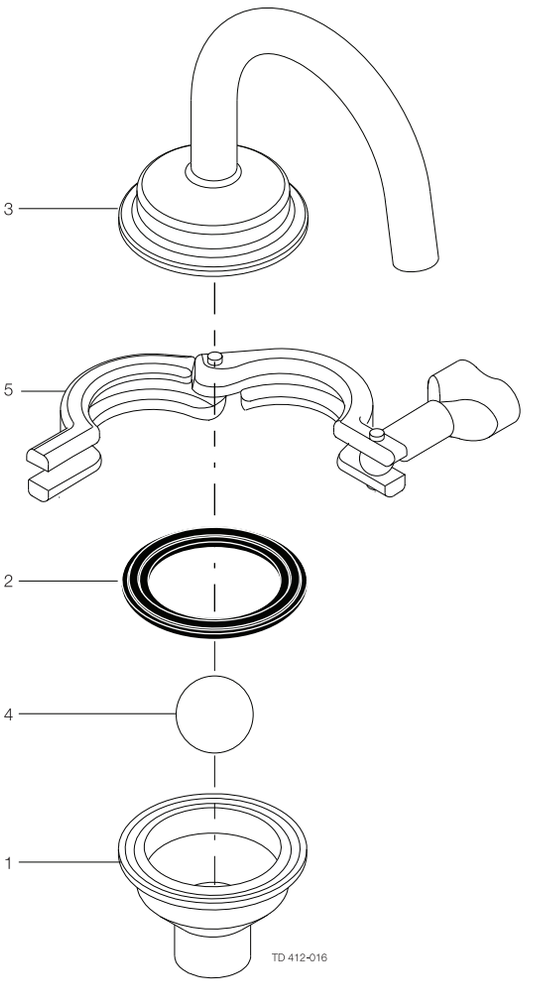
3
5
2
4
1
TD 412-016

Pos		Qty	Denomination	
			Complete valve	9613426901
1		1	Lower valve body	
2	□	1	Seal, EPDM (standard)	
		1	Seal, NBR (Buna N)	
		1	Seal, FPM (SFY)	
3		1	Upper valve body	
4	□	1	Ball	
5		1	Clamp	211053

□	**Service kit, EPDM (standard)**	**9611924199**
□	**Service kit, NBR (Buna N)**	**9611924200**
□	**Service kit, FPM (SFY)**	**9611924201**

Parts marked with □ are included in the service kit.

Recommended spare parts: Service kits.

TD900-459/1

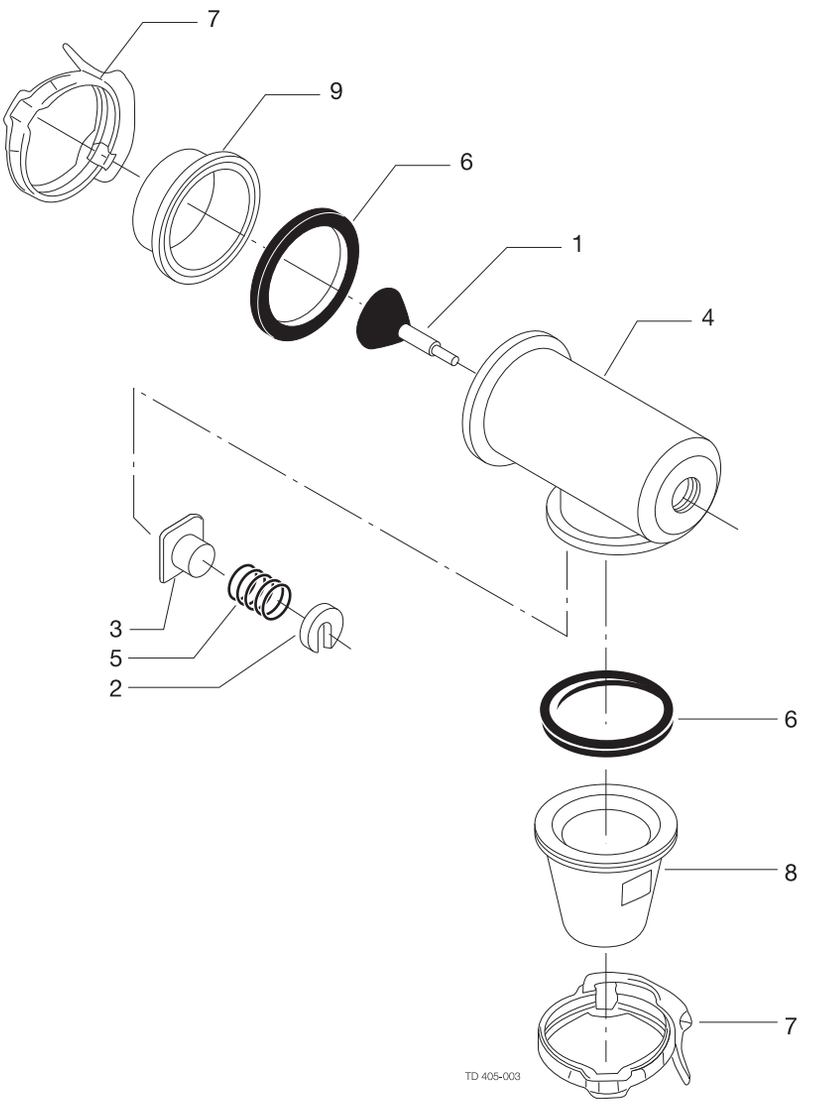
7
9
6
1
4
3
5
2
6
8
7
TD 405-003

AISI 304

Pos		Qty	Denomination	9611250117
1	□	1	Plug	9611252202
2		1	Locking washer	9611252204
3	□	1	Plug guide	9611252203
4		1	Valve body, Please buy complete new valve	
5	□	1	Spring	9611990443
6	□	2	Seal, NBR	9611990767
7		2	Clamp ring	9611991032
8		1	Sight glass	9611252205
9		1	Clamp part	9611310210

□	Service kit	9611924042

Parts marked with □ are included in the service kit.

Recommended spare parts: Service kit.

900-429

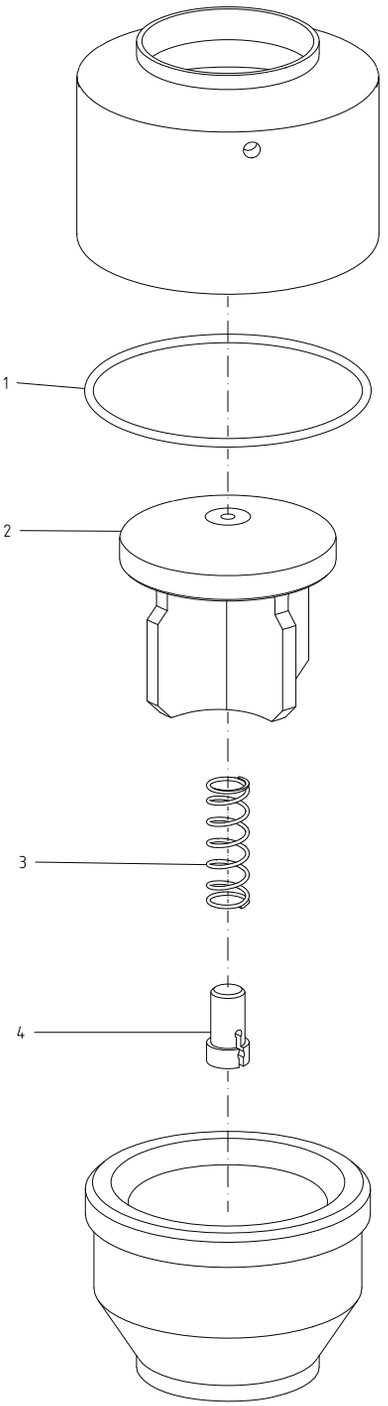
1
2
3
4

Pos	Qty	Denomination	25mm DN25	38mm DN40	51mm DN50	63.5mm DN65	76.1mm DN80	101.6mm DN100
1	1	O-ring	9611995622	9611995623	9611995624	9611995625	9611995634	9611995627
2	1	Valve disc	9615108101	9615108701	9615108801	9615108901	9615107701	9615109001
3	1	Spring	9615107601	9615115301	9615115301	9615109301	9615109301	9615109301
4	1	Spring guide	9615107501	9615107501	9615107501	9615109201	9615109201	9615109201

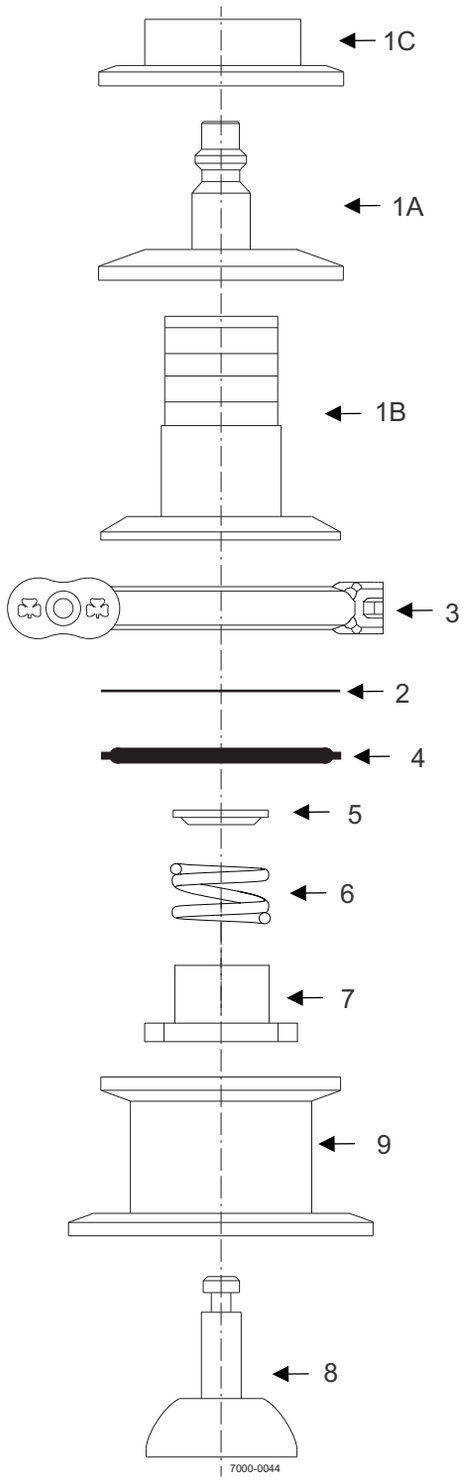
1C
1A
1B
3
2
4
5
6
7
9
8
7000-0044

Pos	Qty	Denomination	1 1/2"	2"	2 1/2"	3"	4"	4 1/2"
1A	1	Quick coupler adapter	763278	763278	763278	763278	763278	763278
1B	1	Rubber hose adapter	213384	213384	213384	213384	213384	213384
1C	1	NPT male adapter : C	210339	210339	210339	210339	210339	210339
	1	NPT male adapter : C1	214206	214206	214206	214206	214206	214206
	1	NPT male adapter : C2	211677	211677	211677	211677	211677	211677
	1	NPT male adapter : C3	211916	211916	211916	211916	211916	211916
2	1	Filter disc	221249	221249	221249	221249	221249	221249
3	1	Clamp	212195	212195	212195	212195	212195	212195
4	1	Back up gasket BUNA	220191	220191	220191	220191	220191	220191
	1	Back up gasket EPDM	220275	220275	220275	220275	220275	220275
	1	Back up gasket SFY	220284	220284	220284	220284	220284	220284
5	1	Washer	754863	754863	754863	754863	754863	754863
6	1	Spring	750788	750788	750788	750788	750788	750788
7	1	Stem guide	750035	750035	750035	750035	750035	750035
8	1	Plug assembly EPDM	778309	778309	778309	778309	778309	778309
	1	Plug assembly SFY	770518	770518	770518	770518	770518	770518
9	1	Valve body	770533	770534	772027	772704	772705	772900

1.4

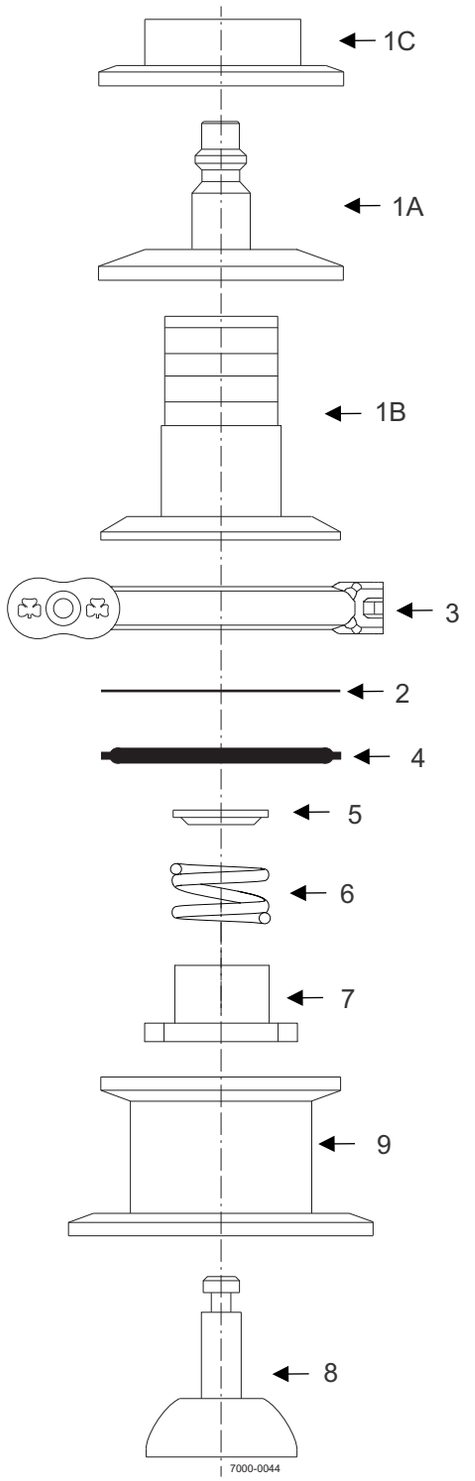

Pos	Qty	Denomination	2"	2 1/2"	3"	4"	4 1/2"
1A	1	Quick coupler adapter	763280	763280	763280	763280	763280
1B	1	Rubber hose adapter	210178	210178	210178	210178	210178
1C	1	NPT male adapter : C	213599	213599	213599	213599	213599
	1	NPT male adapter : C1	211739	211739	211739	211739	211739
2	1	Filter disc	221250	221250	221250	221250	221250
3	1	Clamp	212196	212196	212196	212196	212196
4	1	Back up gasket BUNA	220440	220440	220440	220440	220440
	1	Back up gasket EPDM	9634053299	9634053299	9634053299	9634053299	9634053299
	1	Back up gasket SFY	220694	220694	220694	220694	220694
5	1	Washer	772734	772734	772734	772734	772734
6	1	Spring	751318	751318	751318	751318	751318
7	1	Stem guide	750207	750207	750207	750207	750207
8	1	Plug assembly EPDM	772737	772737	772737	772737	772737
	1	Plug assembly SFY	772738	772738	772738	772738	772738
9	1	Valve body	772725	772727	772729	772731	772733

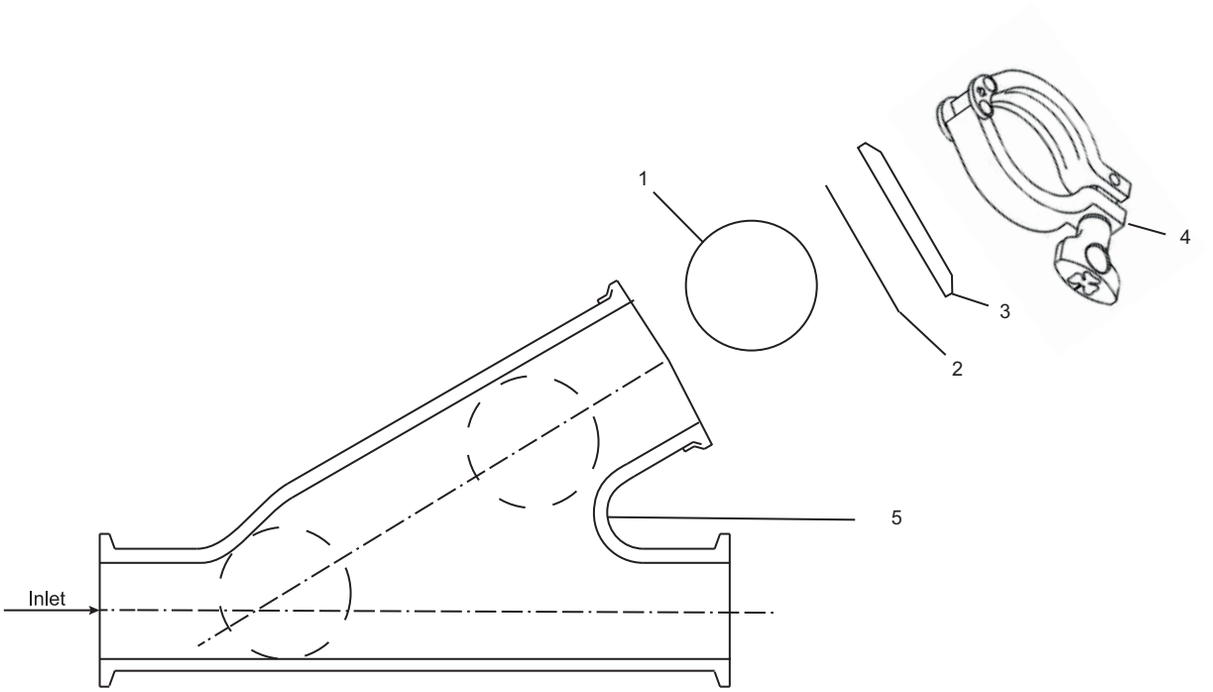

1½” Ball Check takes 2“ Air blow
2” Ball Check takes 2½” Air blow
2½“ Ball Check takes 4” Air blow
3” Ball Check takes 4½” Air blow

Pos	Qty	Denomination	1 ½”	2”	2 ½”	3”
1	1	Ball, BUNA	621934	623203	624209	625150
	1	Ball, EPDM	620374	620376	620996	620995
	1	Ball, SFY	620378	620766	620262	620377
	1	Ball, Nylon	620995	620998	620999	621000
		Ball diameter	1.61”	2.11”	3.485”	4.11”
2	1	Gasket, BUNA	298453	298454	298456	298577
	1	Gasket, EPDM	290043	290048	290018	290147
	1	Gasket, SFY	290030	290040	290053	290060
3	1	Cap	210855	210856	210858	3102371
4	1	Clamp	212196	212197	212199	270267
5	1	Tri-Clamp body	NA	NA	NA	NA

NOTE: For valves with air blow attachment. See “Air Blow Check” 62-174 for spares.

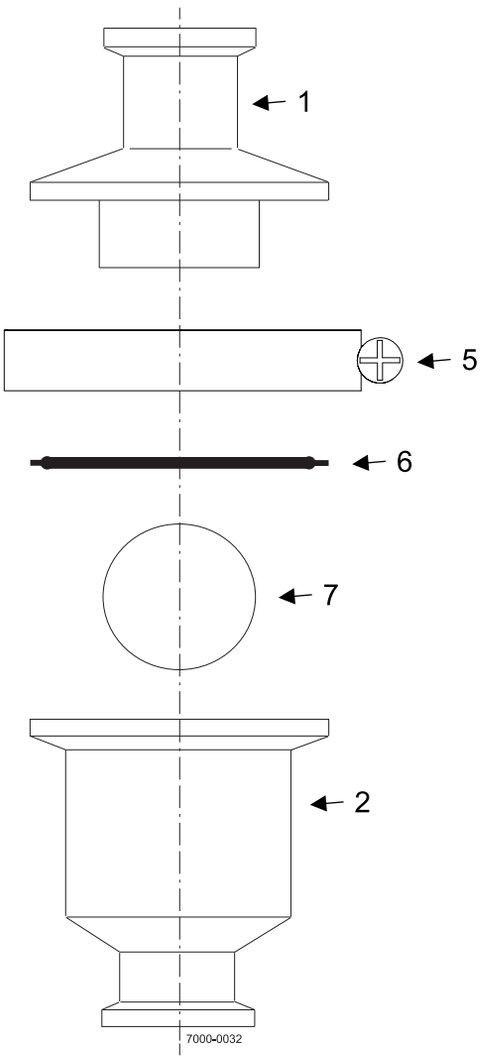
1
5
6
7
2
7000-0032

Pos	Qty	Denomination	1/2'	3/4"
1	1	Upper Body	620052	620268
2	1	Lower Body	620222	620269
5	1	Clamp	755034	755034
6	1	Gasket , Buna	298452	298452
	1	Gasket, EPDM	290044	290044
	1	Gasket, SFY	290022	290022
7	1	Check Ball	620041	620041

1.4

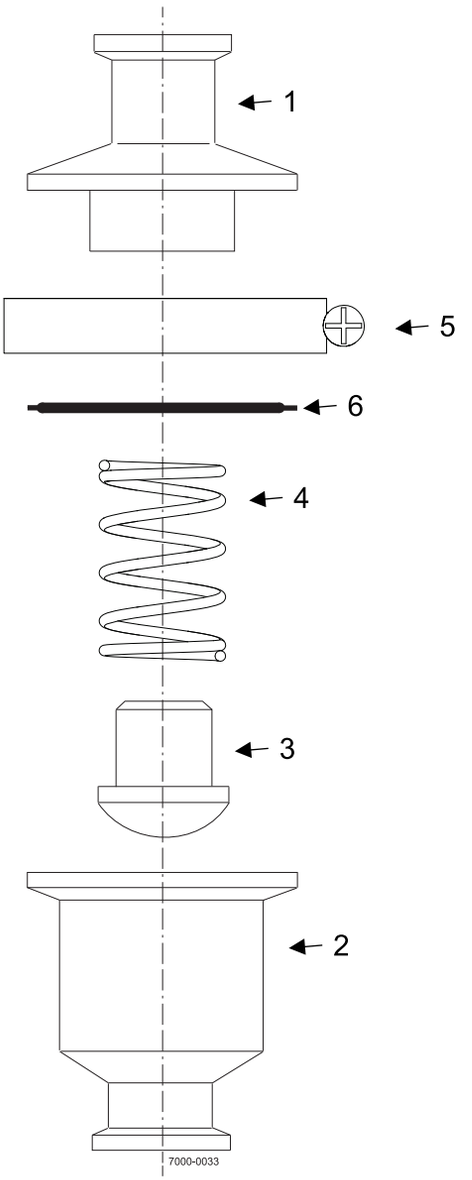

Pos		Qty	Denomination	1/2"	3/4"
1		1	Upper Body	620052	620268
2		1	Lower Body	620222	620269
3	♦○	1	Plug	750263	750263
4	♦○	1	Spring	751030	751030
5		1	Clamp	755034	755034
6		1	Gasket, Buna	298452	298452
	♦	1	Gasket, EPDM	290044	290044
	○	1	Gasket, SFY	290022	290022

Parts marked with ♦○ are included in the service kits.

♦	Service Kit - EPDM	9636000505
○	Service Kit - SFY	9636000506

1.4

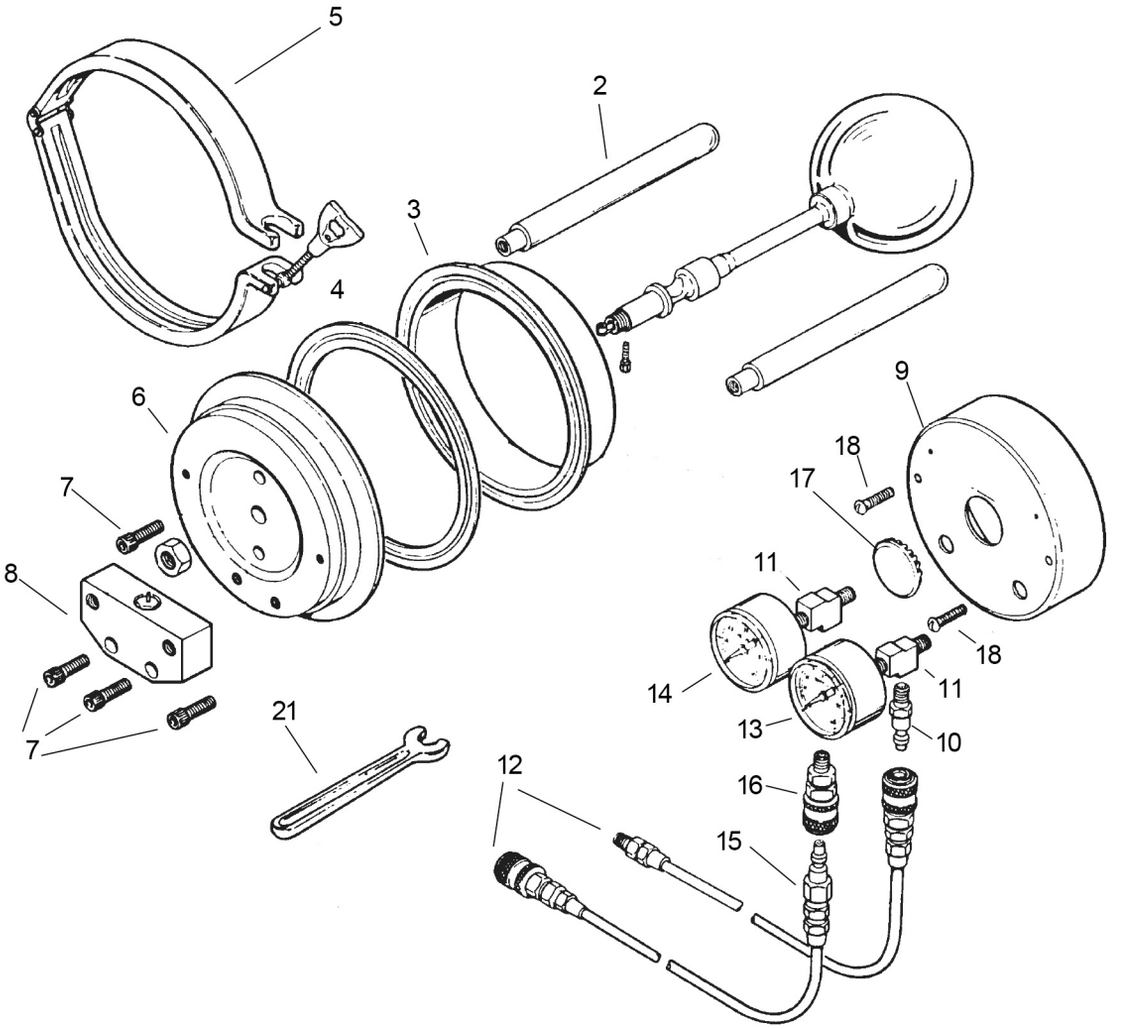

Pos		Qty	Denomination	
1		1	Ball Float and Float Arm Assembly	768740
2		2	Limit Stop Pin	752762
3		1	Ferrule	246200
4		1	Gasket	298456
5		1	Clamp	212199
6		1	Cap - Special 4 inch	760341
7		4	Screw, Socket Head Cap	754516
8	□	1	Air Pilot Assembly	768252
9		1	Cover	758560
10		1	Plug - Coupler	764098
11		2	Tee - Street	765382
12		2	Hose Assembly - Air	765010
13	□	1	Gauge - Valve, 0-60 PSI	760002
14	□	1	Gauge - Supply, 0-60 PSI	760001
15		1	Plug - Coupler	764019
16		1	Body - Coupler	764091
17		1	Plug - Hole	754278
18		2	Screw - Truss Head	754546
21		1	Wrench	285336

Parts marked with □ are included in the service kits.

□	**Service Kit**	**9613990168**

1.4

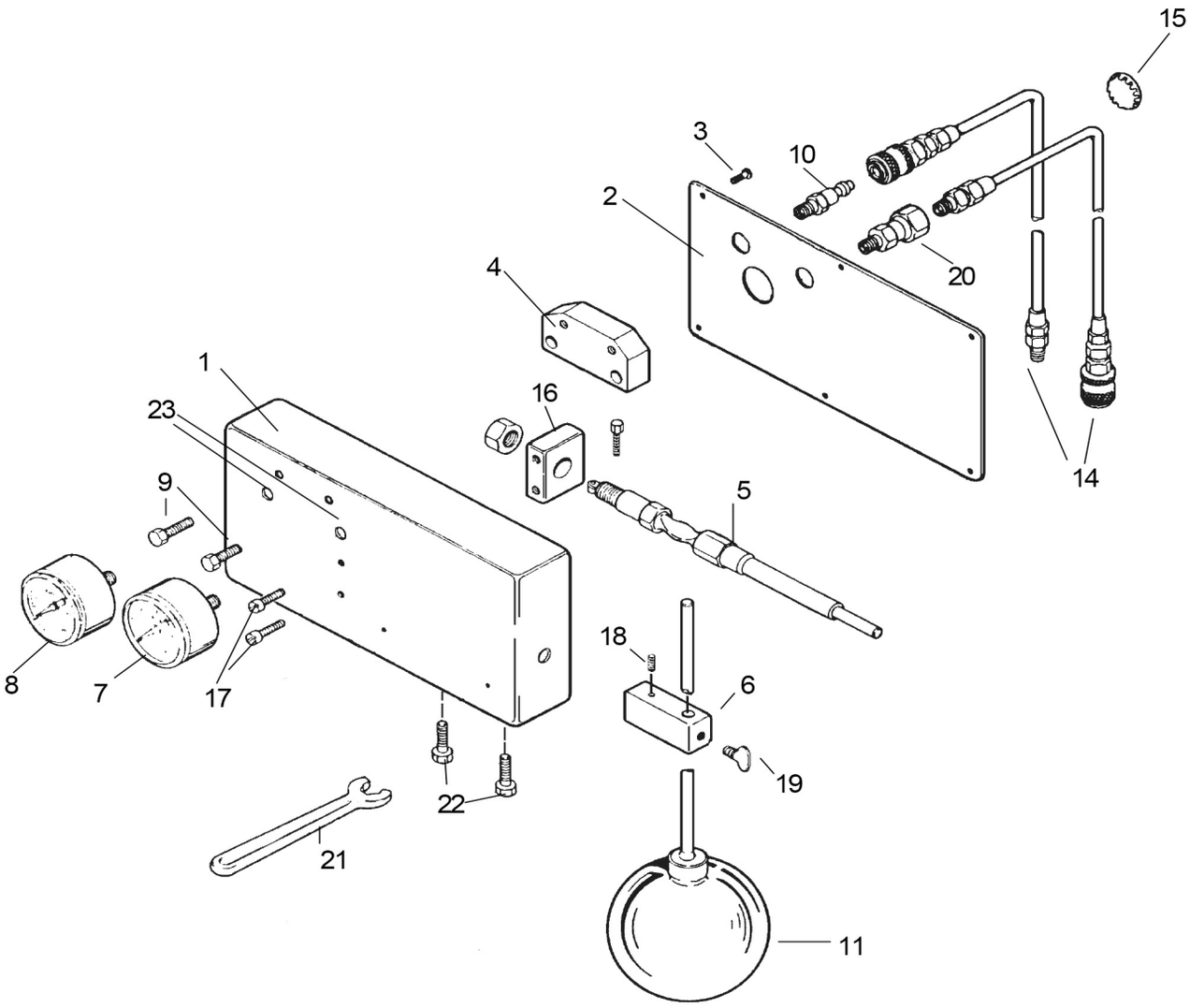

Pos		Qty	Denomination	
1		1	Housing Assembly, (Used on Model 30-103)	760194
		1	Housing Assembly, (Used on Model 30-104)	765993
2		1	Cover, (Used on Model 30-103)	760189
		1	Cover, (Used on Model 30-104)	760189
3		6	Screw	754603
4	□	1	Air Pilot Assembly	768540
5		1	Flexible Shaft	775320
6		1	Float Adapter	763550
7	□	1	Gauge, - Valve, 0-60 PSI	760002
8	□	1	Gauge, - Valve, 0-60 PSI	760001
9		2	Screw	189798
10		1	Adapter - Air Coupler	764098
11		1	Float and Rod Assembly	768746
14		2	Hose Assembly - Air	765010
15		1	Plug - Hose	754278
16		1	Support - Flexible Shaft	750149
17		2	Screw	754588
18		1	Set Screw	180215
19		1	Thumbscrew	751202
20		1	Connector	765257
21		1	Wrench	285336
22		2	Screw - Hex Head	189753
23		2	Washer	180037

Parts marked with □ are included in the service kits.

□	**Service Kit**	**9613990169**

Not manufactured anymore

1.4

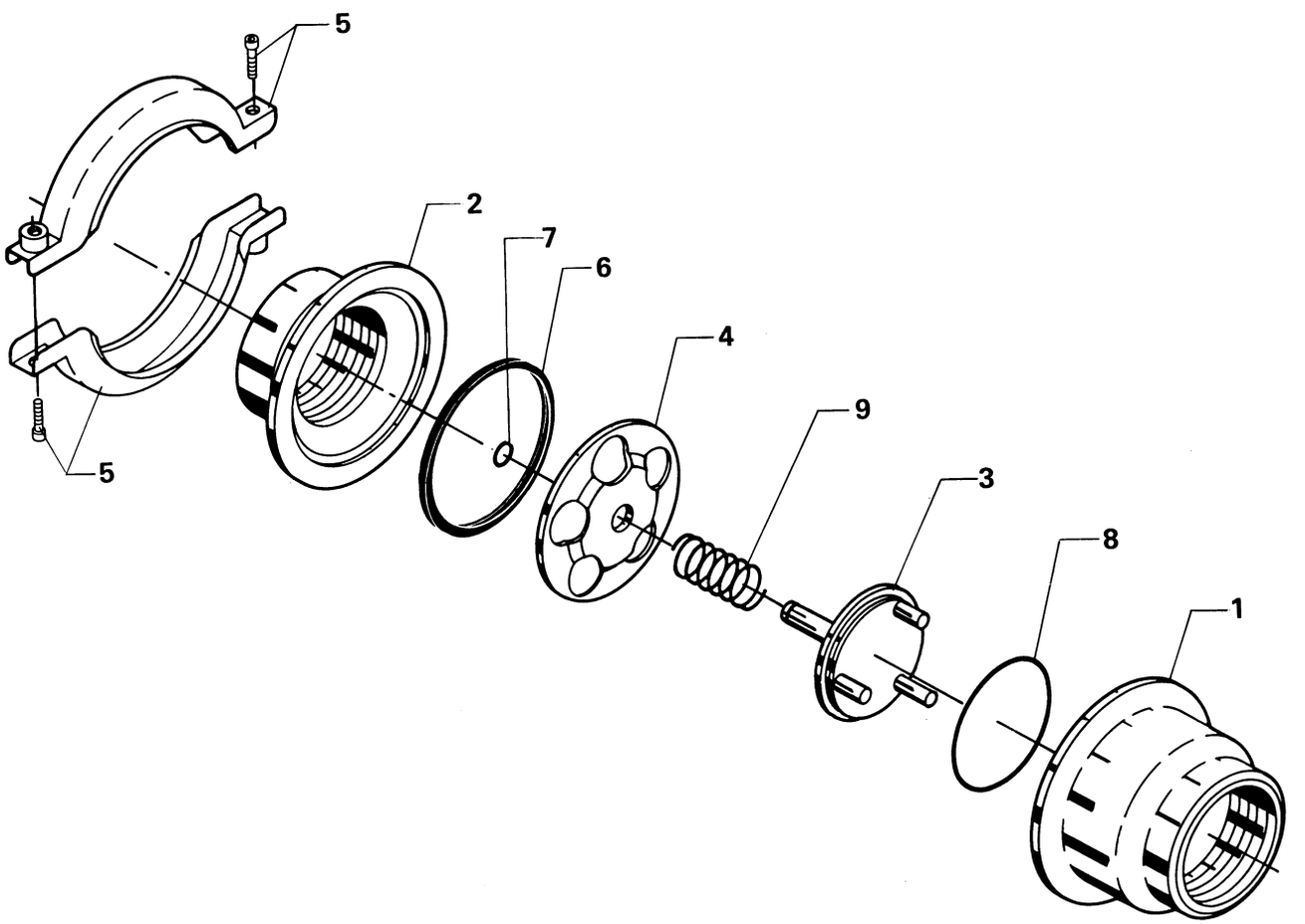

Pos		Qty	Denomination	25 mm	38 mm	51 mm	63,5 mm	76 mm
AISI 304								
1		1	Valve body					
2		1	Welding liner					
3		1	Valve cone	9612220701	9612220702	9612220703	9612220704	9612220705
4		1	Guide plate	9612220801	9612220802	9612220803	9612220804	9612220805
5		1	Clamp ring	9611311052	9611311053	9611311054	9611311055	9611311056
6	▲	1	Seal ring (EPDM)	9611253150	9611253151	9611253152	9611253153	9611253154
7	▲	1	O-ring (EPDM)	9611990016	9611990016	9611990016	9611990016	9611990016
8	▲	1	O-ring (EPDM)	9611990063	9611990015	9611990064	9611990065	9611990066
9		1	Spring	9611991677	9611991678	9611991679	9611991680	9611991681

Pos		Qty	Denomination	25 mm	38 mm	51 mm	63,5 mm	76 mm
AISI 316								
1		1	Valve body					
2		1	Welding liner					
3		1	Valve cone	9612220701	9612220702	9612220703	9612220704	9612220705
4		1	Guide plan	9612220801	9612220802	9612220803	9612220804	9612220805
5		1	Clamp ring	9611311052	9611311053	9611311054	9611311055	9611311056
6	▲	1	Seal ring (EPDM)	9611253150	9611253151	9611253152	9611253153	9611253154
7	▲	1	O-ring (EPDM)	9611990016	9611990016	9611990016	9611990016	9611990016
8	▲	1	O-ring (EPDM)	9611990063	9611990015	9611990064	9611990065	9611990066
9		1	Spring	9611991677	9611991678	9611991679	9611991680	9611991681

▲	Service kit EPDM	9611924026	9611924027	9611924028	9611924029	9611924030
---	---	---	---	---	---	---

Parts marked with r are included in the Service kit.

Not manufactured anymore

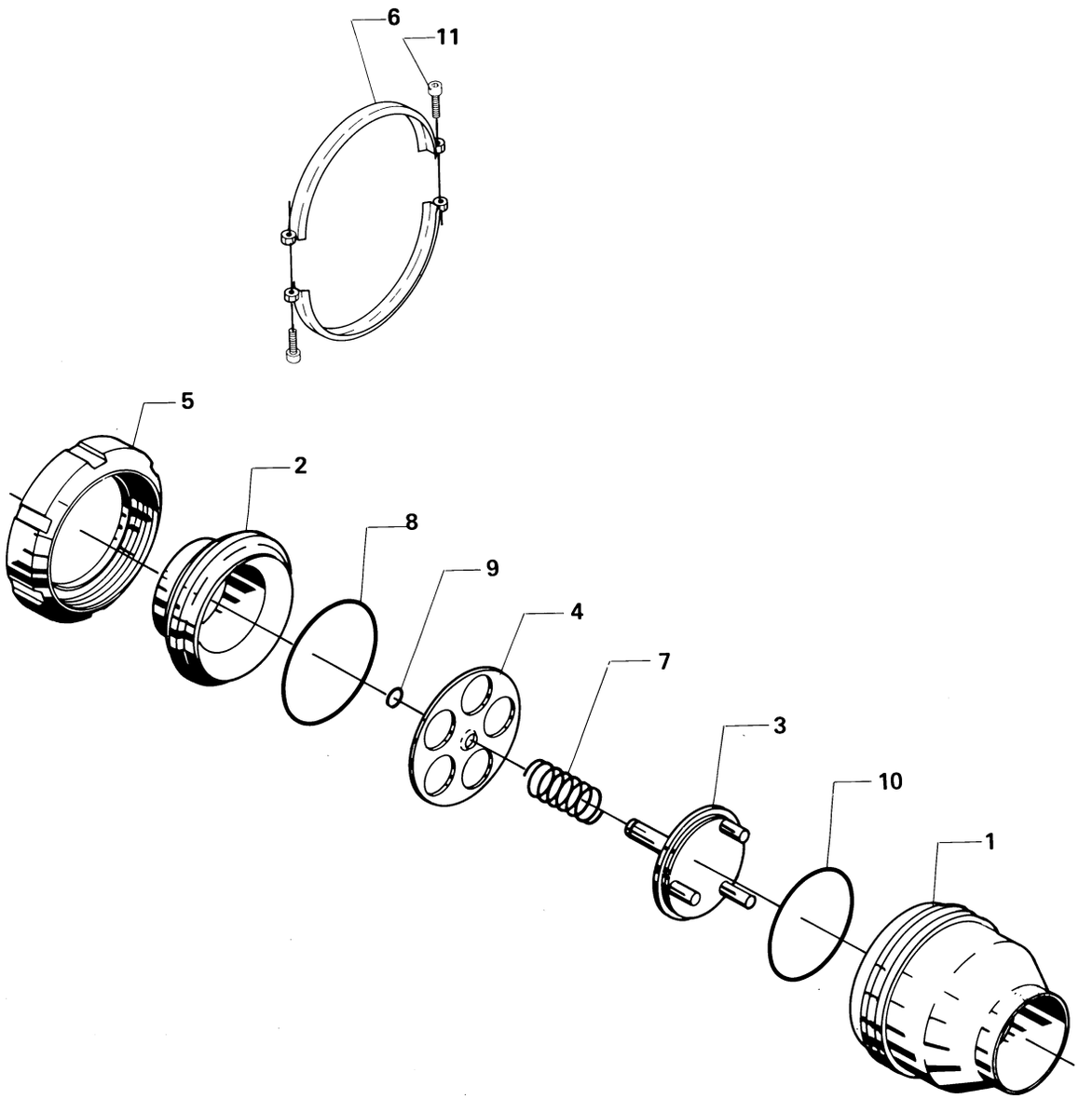

Pos	Qty	Denomination	25mm	38mm	51mm	63.5mm	76mm
1	1	Valve boby					
2	1	Expanding liner					
3	1	Valve cone					
4	1	Guide plate					
5	1	Nut	3131900021	3131900031	3131900041	3131900051	3131900061
6	1	Spring	9611990401	9611990401	9611990402	9611990402	9611990403
7	1	O-ring. EPDM	9611990061		9611990019	9611990041	9611990062
8	1	O-ring, EPDM	9611990016	9611990016	9611990016	9611990016	9611990016
9	1	O-ring. EPDM	9611990063	9611990015	9611990064	9611990065	9611990066

Recommended spare parts: pos. 7,8,9.

Not manufactured anymore

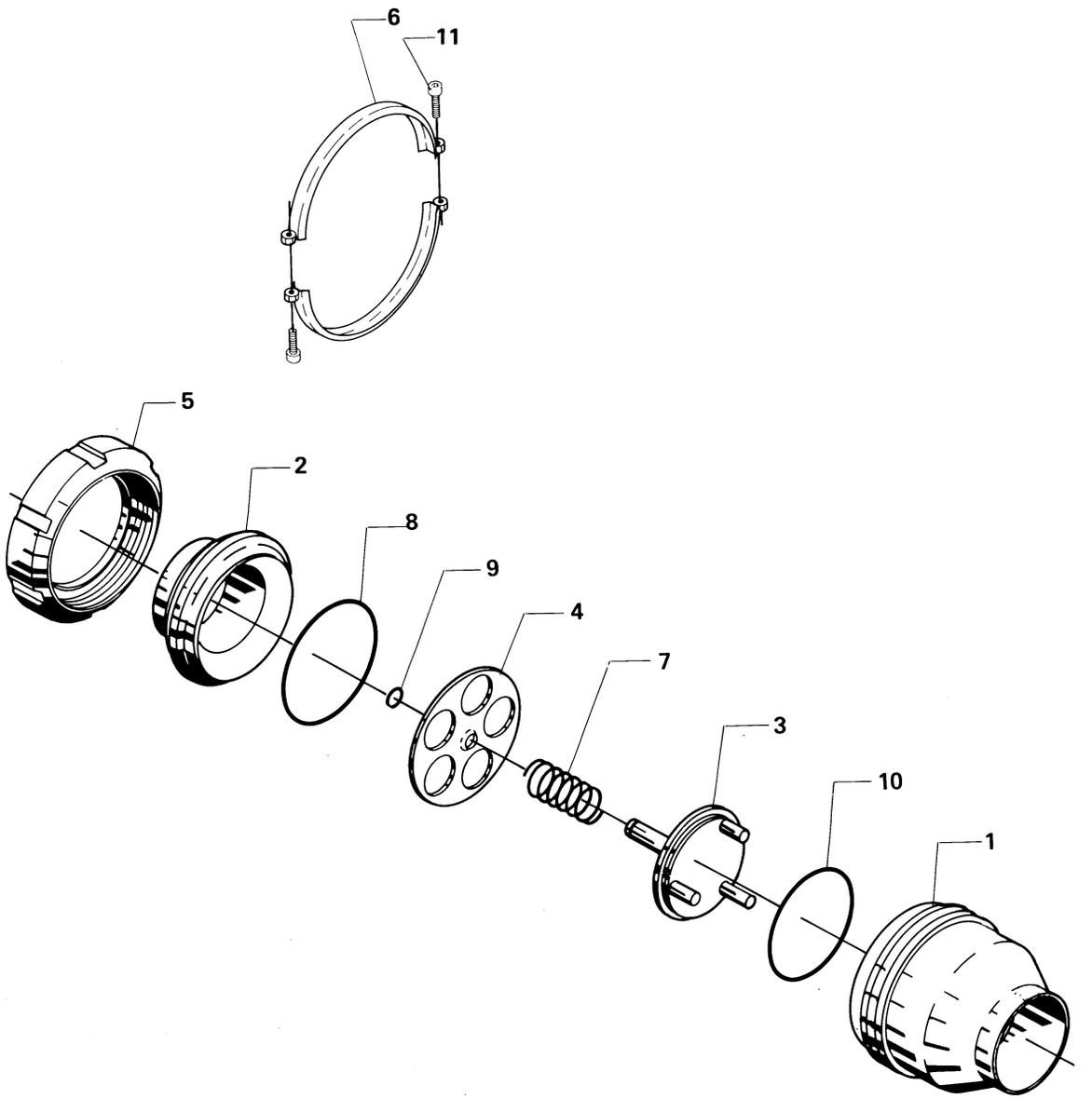

Pos	Qty	Denomination	AISI304 25 mm	AISI 304 38 mm	AISI 304 51 mm	AISI 304 63.5 mm	AISI 304 76 mm	AISI 304 101.6 mm	AISI 316 101.6 mm
1	1	Valve body							
2	1	Welding liner							
3	1	Valve cone							
4	1	Guide plate							
5	1	Nut	3131900021	3131900031	3131900041	3131900051	3131900061		
6	2	Clamp half							
7	1	Spring	9611990401	9611990401	9611990402	9611990402	9611990403		
8	1	O-ring, EPDM	9611990061		9611990019	9611990041	9611990062	9611990024	9611990024
9	1	O-ring, EPDM	9611990016	9611990016	9611990016	9611990016	9611990016	9611990016	9611990016
10	1	O-ring, EPDM	9611990063	9611990015	9611990064	9611990065	9611990066	9611990067	9611990067

Recommended spare parts: pos. 8,9,10.

Not manufactured anymore

1.4

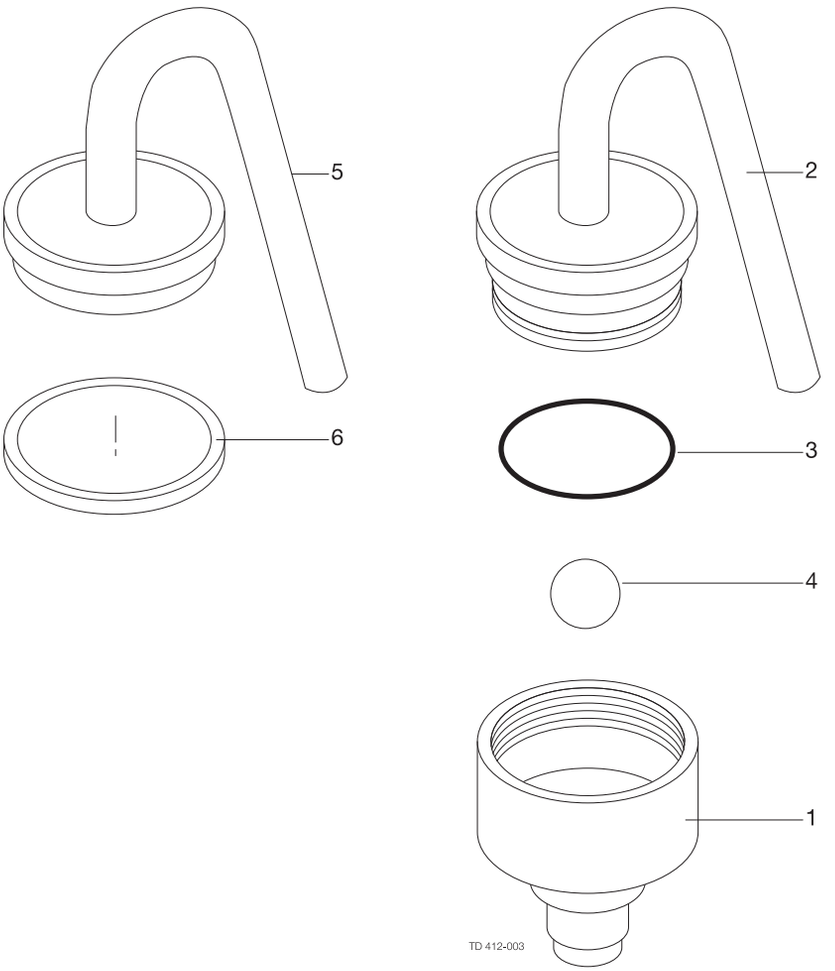

Pos		Qty	Denomination	961120104
1		1	Valve body	
2		1	Top section for O-ring (Period 8811-)	
3	□	1	O-ring (Period 8811-)	9611990010
4	□◆	1	Ball	9611991144
5		1	Top section for fibre seal (Period 8208-8810 Canceled)	
6	◆	1	Fibre seal (Period 8208-8810)	9611990195

◆	**Service kit, LKUV**	**9611924043**
□	**Service kit, LKUV-1**	**9611924044**

Parts marked with □◆ are included in the service kit.

Recommended spare parts: Service kits.

900-430

Not manufactured anymore

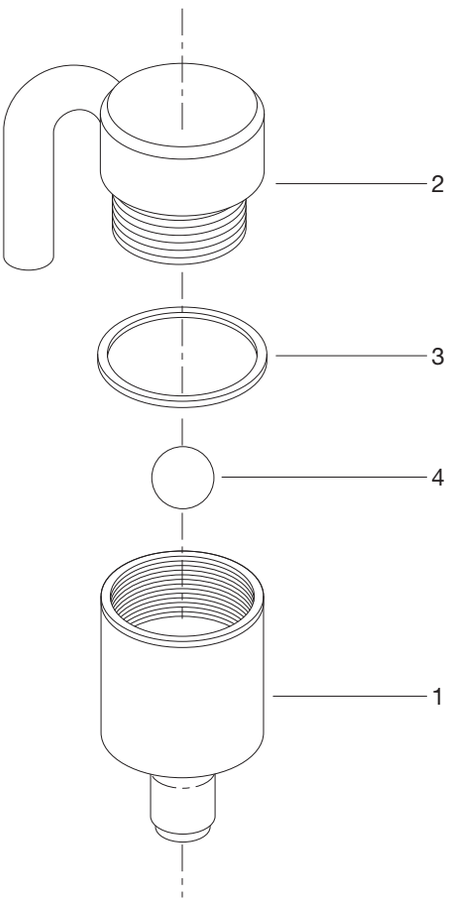

AISI 304

Pos		Qty	Denomination	
1		1	Valve body	
2		1	Top section	
3	□	1	Seal (Fibre)	9611990195
4	□	1	Ball	9611991144
			Service kit	**9611924043**

Parts marked with □ are included in the service kit.

Recommended spare parts: Service kit.

900466

Not manufactured anymore

1.4

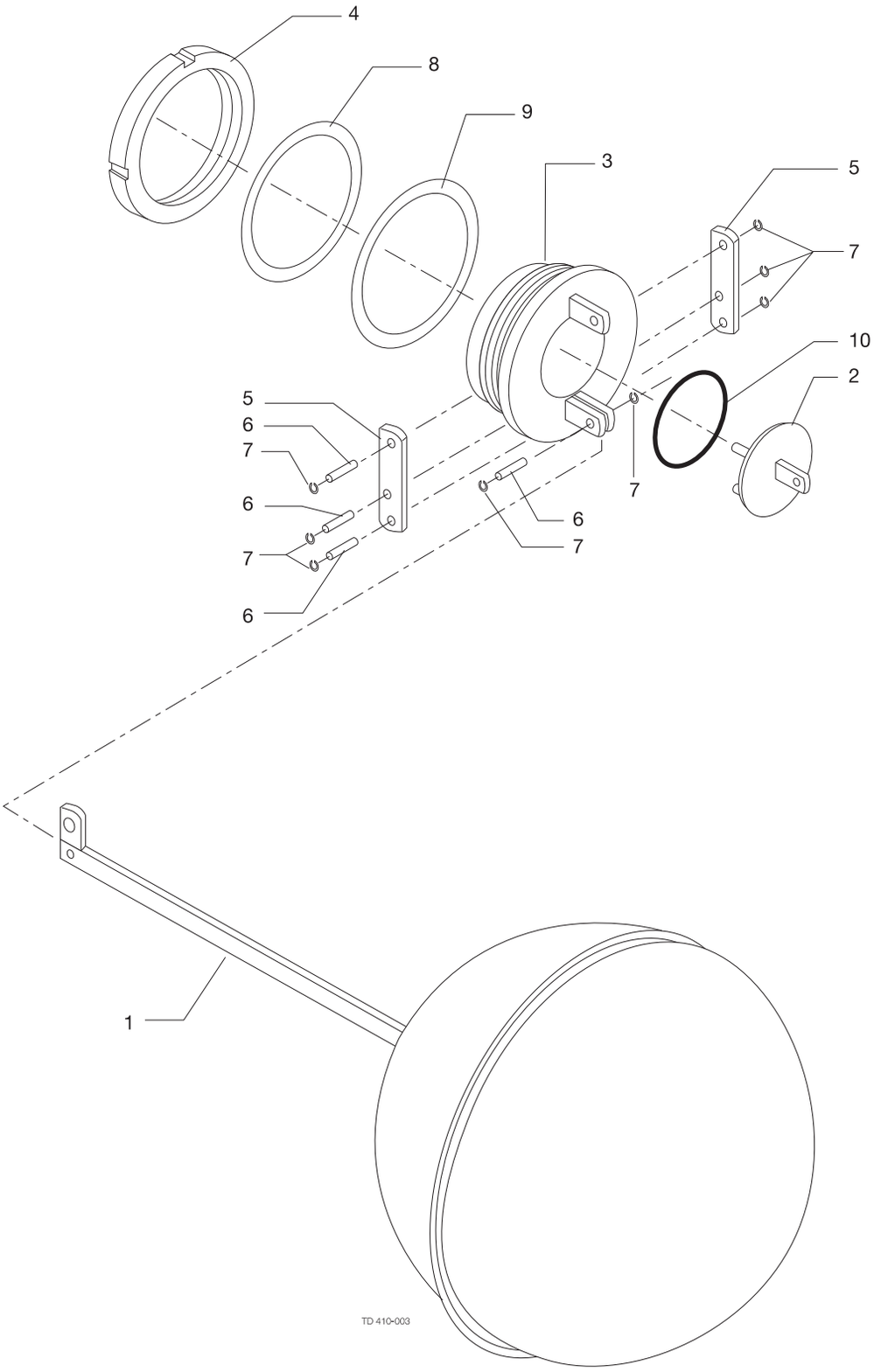

AISI 304

Pos		Qty	Denomination	9611250045 25mm	9611250046 38mm	9611250047 51mm	9611250048 63.5mm	76mm	88.8mm
1		1	Float						
2		1	Valve cone						
3		1	Valve house						
4		1	Nut						
5		2	Connecting link						
6		4	Guide pin						
7	□	8	Lock ring						
8	□	1	Seal, NBR						
9	□	1	Seal, Fibre						
10	□	1	O-ring, NBR						
				25 mm	38 mm	51 mm	63.5 mm	76.1 mm	88.8 mm
□			**Service kit**	9611924023	9611924023	9611924024	9611924024		

Parts marked with □ are included in the service kit.

Recommended spare parts: Service kit.

900423

Not manufactured anymore

1.4

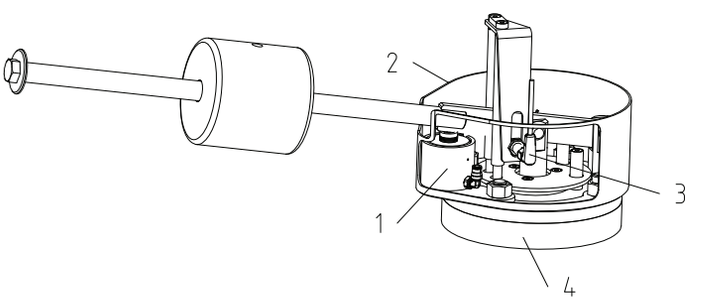

PRV Pressure Relief Valve
AISI 316

Pos		Qty	Denomination	3134800142 PRV-A 51 mm	3134800182 PRV-A 51 mm	3134800911 PRV-B 51 mm
1		1	Valve body			
2		1	Valve body			
3		1	Valve cone			
4		1	Valve spring			
		2	Valve spring			
5		1	Valve spindle			
6	▲	1	O-ring	22340433	22340433	22340433
7		1	Nut			
8		1	Lock washer			
9		1	Lock nut			
10	▲	2	Seal	71068	71068	71068
11		1	Counter nut			
12		1	Spring extension			
13		1	Seal	190604	190604	190604

1.5 Diaphragm valves

Our extensive range of aseptic diaphragm valves covers your need for ultra-hygienic processes.



Spare parts
Unique DV-ST, actuators 1.5.178
Unique DV-ST, handles 1.5.182

Service tools
Unique DV-P UltraPure, tools 1.5.186

Service tools for obsolete products
Radial Diaphragm Valve UltraPure, service tools, pneumatic actuator 1.5.188

Spare parts for obsolete products
Unique DV-P UltraPure, manual 1.5.190
Unique DV-P UltraPure, pneumatic 1.5.192
Radial Diaphragm Valve UltraPure, shut-off, actuator 1.5.194
Radial Diaphragm Valve UltraPure, shut-off, manual 1.5.196
Radial Diaphragm Valve UltraPure, tank outlet, actuator 1.5.198
Radial Diaphragm Valve UltraPure, tank outlet, manual 1.5.200

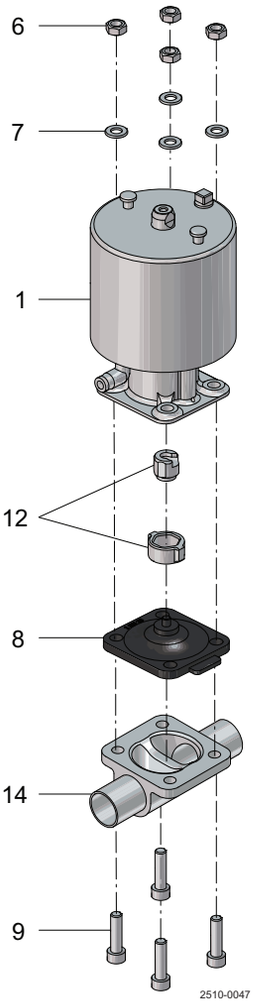

High pressure actuator
(SS/HP)

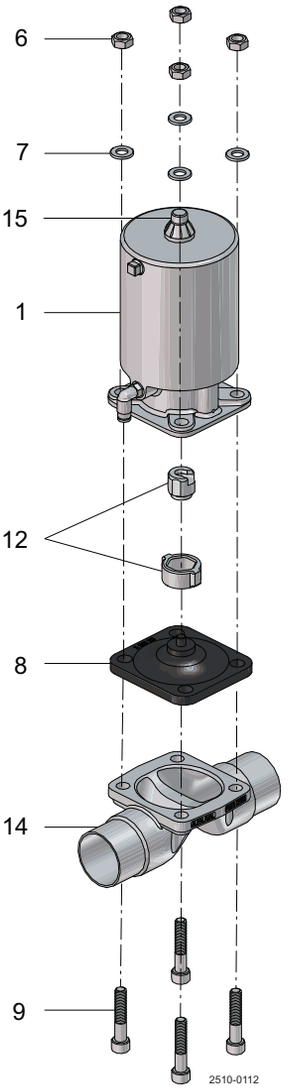

Slim actuator
(SS/SL)

Pos	Qty	Denomination	DN8 - 1/4" *DN10 - 3/8"	DN15 - 1/2"	DN20 - 3/4"
1	1	Actuator, DV-ST SS/SL NC	8010004499	8010004505	8010004508
	1	Actuator, DV-ST SS/SL NO	8010004500	8010004506	8010004509
	1	Actuator, DV-ST SS/SL A/A	8010004501	8010004507	8010004510
	1	Actuator, DV-ST SS/HP NC DN8-DN10 for 2-way valves	9615299901		
	1	Actuator, DV-ST SS/HP NO DN8-DN10 for 2-way valves	9615299902		
	1	Actuator, DV-ST SS/HP A/A DN8-DN10 for 2-way valves	9615299903		
	1	Actuator, DV-ST SS/HP NC DN8-DN10 for T-, TO- and block valves	9615299907		
	1	Actuator, DV-ST SS/HP NO DN8-DN10 for T-, TO- and block valves	9615299908		
	1	Actuator, DV-ST SS/HP A/A DN8-DN10 for T-, TO- and block valves	9615299909		
	1	Actuator, DV-ST SS/HP NC		9615300001	9615303201
	1	Actuator, DV-ST SS/HP NO		9615300002	9615303202
	1	Actuator, DV-ST SS/HP A/A		9615300003	9615303203
15	1	Indication cap kit for SS/SL	8010008655	8010008656	8010008657
8	1	Diaphragm, EPDM (button)	9615000101	9615000103	9615000104
	1	Diaphragm, PTFE/EPDM (bayonet)	N/A	9615000154	9615000155
	1	Diaphragm, TFM/EPDM (bayonet)	N/A	9615000136	9615000137
	1	Diaphragm, TFM/EPDM Point-fixed**	9615000134	9615005270	9615005271
9+6+7	1	Nut, washer, screw set, SS/HP actuator			
	1	for 2-way valve forged	9615353601	9615353603	9615353603
	1	For 2-way valve cast ST	8010008661	9615353603	9615353602
	1	For 2-way valve cast OP	8010008661	8010008661	9615353603
	1	For T-, TO- and block valve	9615353609	9615353611	9615353611
	1	Nut, washer, screw set, SS/SL actuator			
	1	For 2-way valve forged	9615353601	9615353603	9615353603
	1	For 2-way valve cast ST	8010008661	9615353603	9615353603
	1	For 2-way valve cast OP	8010008661	8010008661	9615353603
	1	For T-, TO- and block valve	9615353609	9615353611	9615353611
Compressor kit					
12	1	Button	9614278701	9615005184	9615005186
	1	Bayonet	N/A	9615005203	9615005205
	1	Thread	N/A	9615005204	9615005206
14	1	Valve body, please contact Alfa Laval			

* For valves DN10 please check marking on diaphragm for actual actuator size of the diaphragm (DN8 or DN15).
For parts to DN10 please note: ISO 1127 - DN10 - are made from valve body DN15. Other standards - DN10 - are made from valve body DN8.
For T-valve select actuator size based on outlet dimension.

** = Compressor kit: Button for DN 8, Thread for DN15-DN20

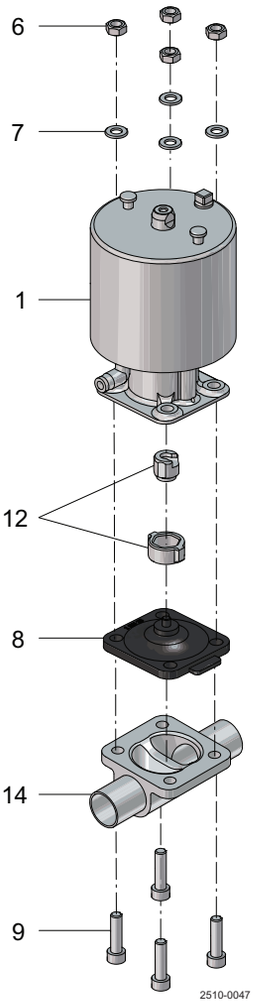

High pressure actuator
(SS/HP)

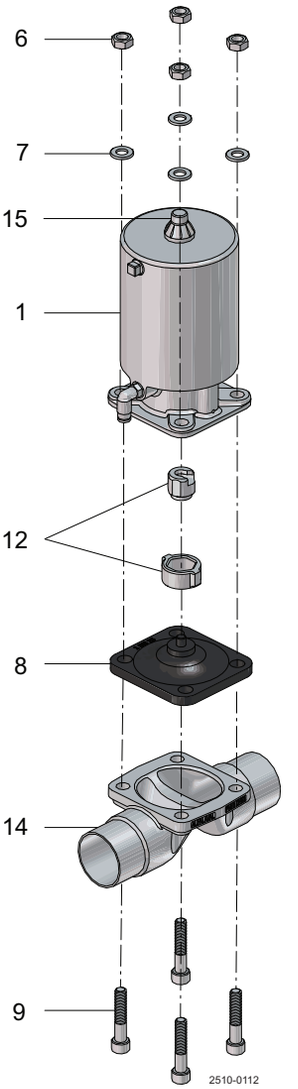

Slim actuator
(SS/SL)

Pos	Qty	Denomination	DN25 - 1" *DN32 - 1 1/4"	*DN32 - 1 1/4" DN40 - 1 1/2"	DN50 - 2"	DN65 - 2 1/2"	DN80 - 3" DN100 - 4"
1	1	Actuator, DV-ST SS/SL NC	8010004511	8010004514	8010004517	8010004520	8010004523
	1	Actuator, DV-ST SS/SL NO	8010004512	8010004515	8010004518	8010004521	8010004524
	1	Actuator, DV-ST SS/SL A/A	8010004513	8010004516	8010004519	8010004522	8010004525
	1	Actuator, DV-ST SS/HP NC	9615303301	9615303801	9615303901	9615304401	9615304501
	1	Actuator, DV-ST SS/HP NO	9615303302	9615303802	9615303902	9615304402	9615304502
	1	Actuator, DV-ST SS/HP A/A	9615303303	9615303803	9615303903	9615304403	9615304503
15	1	Indication cap kit for SS/SL	8010008656	8010008656	8010008658	8010008659	8010008660
8	1	Diaphragm, EPDM (Thread)	9615000105	9615000107	9615000108	9615000109	9615000110
	1	Diaphragm, PTFE/EPDM (Bayonet)	9615000156	9615000158	9615000159	9615000160	9615000161
	1	Diaphragm, TFM/EPDM (Bayonet)	9615000138	9615000140	9615000141	9615000142	9615000143
	1	Diaphragm, TFM/EPDM Point-fixed (Thread)	9615005272	9615005273	9615005274	9615005275	9615005276
9+6+7	1	Nut, washer, screw set, SS/HP actuator					
	1	For 2-way valve forged	8010008667	9615353605	9615353605	8010008668	8010008665
	1	For 2-way valve cast ST	9615353604	8010008663	8010008663	8010008664	9615353608
	1	For 2-way valve cast OP	9615353602	9615353604	8010008663	8010008663	N/A
	1	For T-, TO- and block valve	9615353612	9615353613	9615353613	9615353615	9615353616
	1	Washer and screw set for DN100 - 4" with SS/HP actuator					9615353616
	1	Nut, washer, screw set, SS/SL actuator					
	1	For 2-way valve forged	8010008667	9615353605	9615353605	8010008668	8010008665
	1	For 2-way valve cast ST	9615353604	8010008663	8010008663	8010008664	9615353608
	1	For 2-way valve cast OP	9615353602	9615353604	8010008663	8010008663	N/A
	1	For T-, TO- and block valve	9615353612	9615353613	9615353613	9615353615	9615353616
	1	Washer and screw set, for DN100 - 4" with SS/SL actuator					9615353616
Compressor kit							
12	1	Compressor kit					
	1	Bayonet	9615005208	9615005223	9615005224	9615005226	9615005228
	1	Thread	9615005207	9615005209	9615005222	9615005225	9615005227
14	1	Valve body, please contact Alfa Laval					

* For valves DN 32 please check marking on diaphragm for actual actuator size of the diaphragm (DN 25 or DN 40).
For parts to DN32 please note: ISO 1127 - DN32 - are made from valve body DN40.
For T-Valve select actuator size based on outlet dimension.

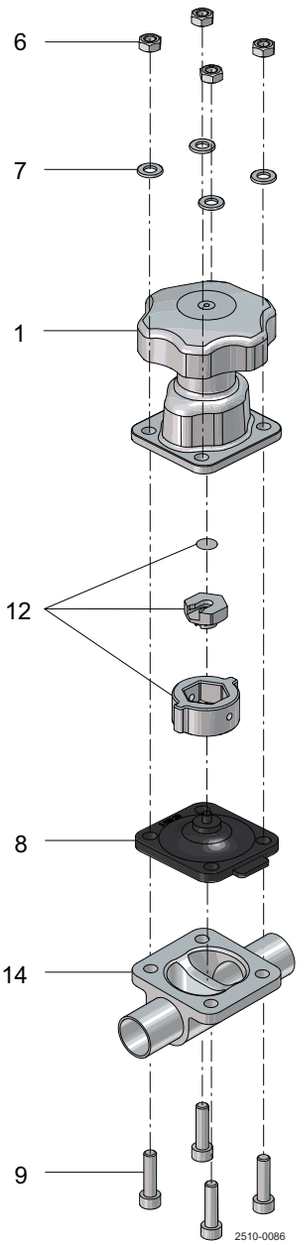
6
7
1
12
8
14
9
2510-0086

Pos	Qty	Denomination	DN8 - 1/4" *DN10 - 3/8"	DN15 - 1/2"	DN20 - 3/4"
Handles					
1	1	Handle, SS/SS	9615459101	9615459201	9615459301
	1	Handle, C/SS	9615459102	9615459202	9615459302
8	1	Diaphragm, EPDM (Button)	9615000101	9615000103	9615000104
	1	Diaphragm, PTFE/EPDM (Bayonet)	N/A	9615000154	9615000155
	1	Diaphragm, TFM/EPDM Bayonet	N/A	9615000136	9615000137
	1	Diaphragm, TFM/EPDM Point-fixed **	9615000134	9615005270	9615005271
9+6+7	1	Nut, washer, screw set			
	1	For 2-way valve forged	8010008661	9615353603	9615353603
	1	For 2-way valve cast ST	8010008661	9615353603	9615353603
	1	For 2-way valve cast OP	8010008661	8010008661	9615353603
	1	For T-, TO- and block valve	9615353609	9615353611	9615353611
Compressor kit					
12	1	Button	9614278701	9615005184	9615005186
	1	Bayonet	N/A	9615005203	9615005205
	1	Thread	N/A	9615005204	9615005206
14	1	Valve body - please contact Alfa Laval			

* For valves DN10 please check marking on diaphragm for actual size of the diaphragm (DN8 or DN15).
For parts to DN10 please note: ISO 1127 - DN10 - are made from valve body DN15. Other standards - DN10 - are made from valve body DN8.

Compressor kit: Button for DN 8, thread for DN15-DN20

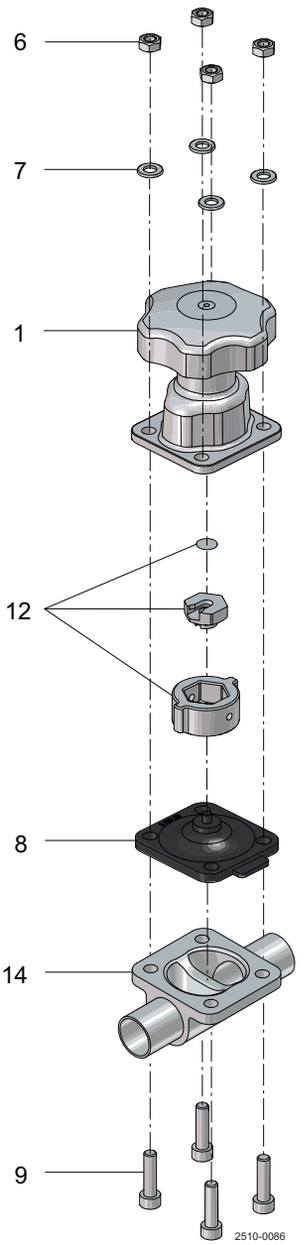
6
7
1
12
8
14
9
2510-0086

Pos	Qty	Denomination	DN25 - 1" *DN32 - 1 1/4"	*DN32 - 1 1/4" DN40 - 1 1/2"	DN50 - 2"	DN65 - 2 1/2"	DN80 - 3" DN100 - 4"
Handle							
1	1	Handle, SS/SS	9615459401	9615459501	9615459601	9615459701	9615459801
	1	Handle, C/SS	9615459402	9615459502	9615459602	9615459702	9615459802
8	1	Diaphragm, EPDM Thread	9615000105	9615000107	9615000108	9615000109	9615000110
	1	Diaphragm, PTFE/EPDM Bayonet	9615000156	9615000158	9615000159	9615000160	9615000161
	1	Diaphragm, TFM/EPDM Bayonet	9615000138	9615000140	9615000141	9615000142	9615000143
	1	Diaphragm, TFM/EPDM point-fixed Thread	9615005272	9615005273	9615005274	9615005275	9615005276
9+6+7	1	Nut, washer, screw set					
	1	For 2-way valve forged	8010008667	9615353605	9615353605	8010008668	8010008665
	1	For 2-way valve cast ST	9615353604	8010008663	8010008663	8010008664	9615353608
	1	For 2-way valve cast OP	9615353602	9615353604	8010008663	8010008663	N/A
	1	For T-, TO- and block valve	9615353612	9615353613	9615353613	9615353615	9615353616
	1	Washer and screw set, for DN100 - 4"					9615353616
Compressor kit							
12	1	Bayonet	9615005208	9615005223	9615005224	9615005226	9615005228
	1	Thread	9615005207	9615005209	9615005222	9615005225	9615005227
14	1	Valve body - please contact Alfa Laval					

* For valves DN 32 please check marking on diaphragm for actual size of the diaphragm (DN 25 or DN 40).

For parts to DN32 please note: ISO 1127 - DN32 - are made from valve body DN40. DN11866 - DN32 - are made from valve body DN25.

Not manufactured anymore

Alfa Laval Standard tool

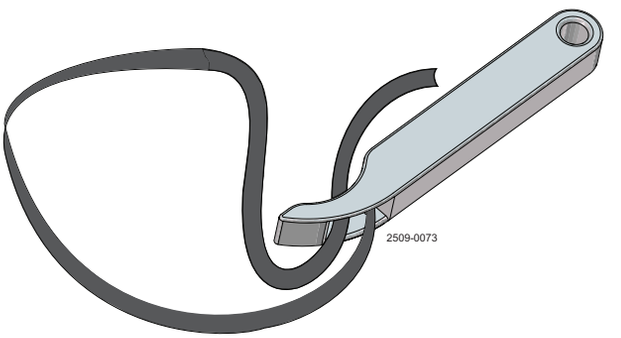

Alfa Laval Easy tool

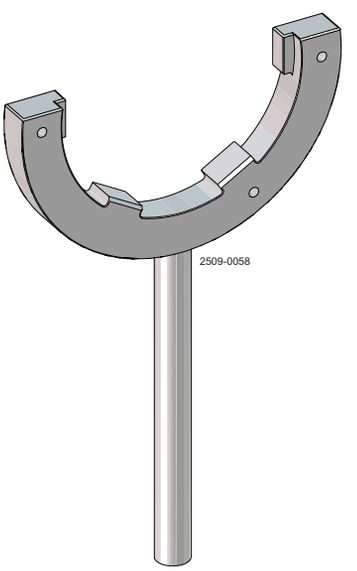

Pos	Qty	Denomination	½” DN15	3/4” DN20	1” DN25	1½” DN40	2” DN50
	1	Alfa Laval Standard tool					
	1	Alfa Laval Easy tool					

TD900-641/1

Not manufactured anymore

1.5

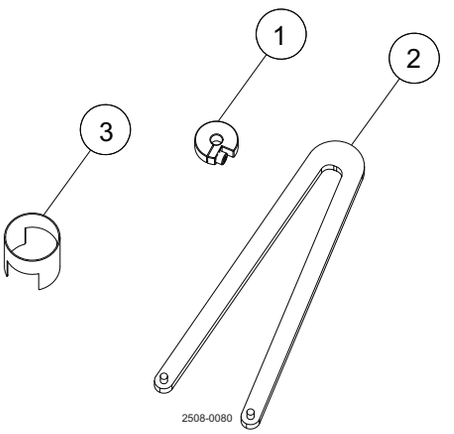

Pos	Qty	Denomination	ø12.7mm ½”	ø25mm - ø38mm 1” - 1 ½”
1	1	Service tool for pneumatic actuator (NC)		9614099601
2	1	Service tool for pneumatic actuator (NC + A/A)	9611995332	9611995332
3	1	Service tool for pneumatic actuator (NC)		9614099901

TD 900-621

Not manufactured anymore

1.5

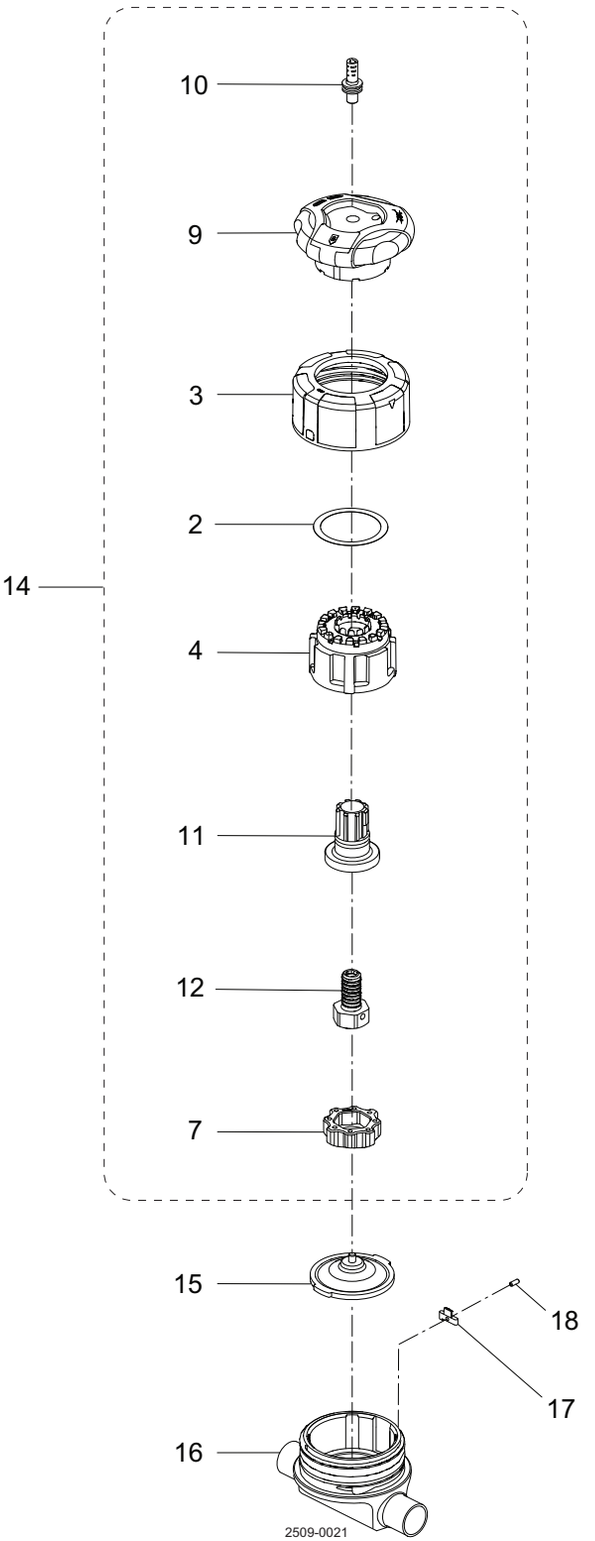

Pos		Qty	Denomination	½" DN15	3/4" DN20	1" DN25	1½" DN40	2" DN50
14		1	Handle, complete					
2		1	Glide ring (DN40 + DN50 only)					
3		1	Housing nut					
4		1	Inner housing					
7		1	Compressor					
9		1	Handle					
10		1	Indicator pin					
11		1	Spindle nut					
12		1	Spindle					
15	♦	1	Diaphragm, EPDM					
	♦	1	Diaphragm, PTFE/EPDM					
Ra 0.5								
16		1	Valve body, welding ends ASME					
		1	Valve body, clamp ends ASME					
Ra 0.4 (electro polished)								
		1	Valve body, welding ends ASME					
		1	Valve body, clamp ends ASME					
17	♦	1	Locking device, EPDM					
	♦	1	Locking device, PTFE/EPDM					
18	♦	1	Screw					

Recommended spare parts: Service kits

Service kits

		½" DN15	3/4" DN20	1" DN25	1½" DN40	2" DN50
♦	Diaphragm set, EPDM (incl. Q-doc)	9615022401	9615022402	9615022403	9615022404	9615022405
♦	Diaphragm set, PTFE/EPDM (incl. Q-doc)	9615022406	9615022407	9615022408	9615022409	9615022410

Parts marked with ♦ are included in the diaphragm set.

TD 900-630/4

Not manufactured anymore

1.5

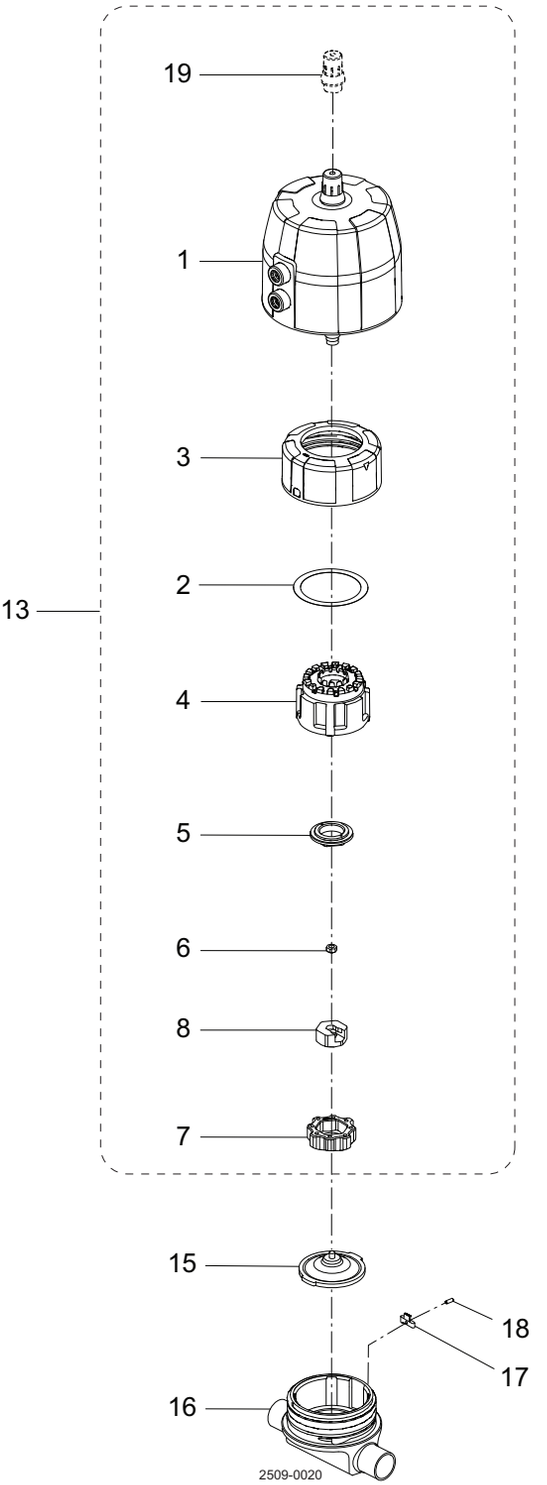

Pos	Qty	Denomination	½" DN15	3/4" DN20	1" DN25	1½" DN40	2" DN50
13	1	Actuator , complete (NC) EPDM diaphragm					
	1	Actuator, complete (NC) PTFE/EPDM diaphragm					
	1	Actuator, complete (NO) PTFE/EPDM + EPDM diaphragm					
	1	Actuator, complete (A/A) PTFE/EPDM + EPDM diaphragm					
1	1	Actuator					
2	1	Glide ring (DN40 + DN50 only)					
3	1	Housing nut					
4	1	Inner housing					
5	1	Mounting nut					
6	1	Nut					
7	1	Compressor					
8	1	Diaphragm holder					
19	1	Indicator cap, (NC) EPDM diaphragm					
	1	Indicator cap, (NC) PTFE/EPDM diaphragm					
	1	Indicator cap, (NO) PTFE/EPDM + EPDM diaphragm					
	1	Indicator cap, (A/A) PTFE/EPDM + EPDM diaphragm					
15 ♦	1	Diaphragm, EPDM					
♦	1	Diaphragm, PTFE/EPDM					
Ra 0.5							
16	1	Valve body, welding ends ASME					
	1	Valve body, clamp ends ASME					
Ra 0.4 (Electro polished)							
	1	Valve body, welding ends ASME					
	1	Valve body, clamp ends ASME					
17 ♦	1	Locking device, EPDM					
	1	Locking device, PTFE/EPDM					
18 ♦	1	Screw					

Recommended spare parts: Service kits.

Service kits

		½" DN15	3/4" DN20	1" DN25	1½" DN40	2" DN50
♦	**Diaphragm set, EPDM (incl. Q-doc)**	9615022401	9615022402	9615022403	9615022404	9615022405
♦	**Diaphragm set, PTFE/EPDM (incl. Q-doc)**	9615022406	9615022407	9615022408	9615022409	9615022410

Parts marked with ♦ are included in the diaphragm set

TD 900-630/3

Not manufactured anymore

1.5

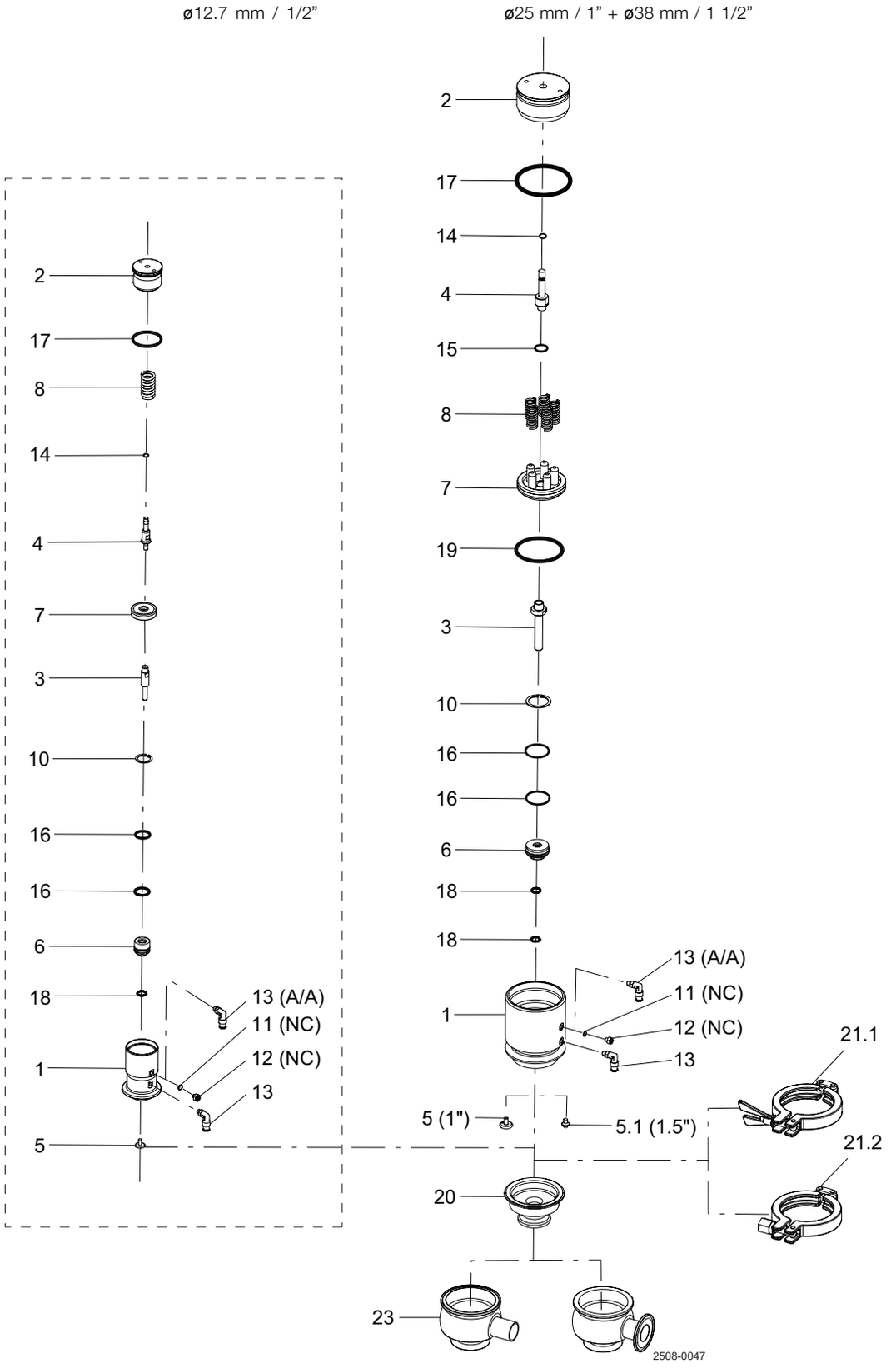

Pos		Qty	Denomination	ø12.7 mm 1/2”	ø25 mm 1”	ø38 mm 1 1/2”
			Actuator, complete (NC)			
			Actuator, complete (A/A)			
1		1	Actuator housing			
2		1	Lid			
3		1	Rod			
4		1	Indicator rod			
5		1	Pressure plate			
5.1		1	Threaded insert			
6		1	Bushing			
7		1	Piston			
8		1	Spring (NC)			
		5	Spring (NC)			
9		5	Spring stud			
10		1	Clip			
11	□	1	Seal			
12		1	Air silencer (NC)			
13		1	Air fitting, (NC)			
		2	Air fitting, (A/A)			
14	□	1	O-ring			
15	□	1	O-ring			
16	□	2	O-ring			
17	□	1	O-ring			
18	□	1	X-ring			
	□	2	X-ring			
19	□	1	X-ring			
20	♦	1	Diaphragm, Silicone (incl. Q-doc.)	9614098901	9614098903	9614098905
	♦	1	Diaphragm, EPDM (incl. Q-doc.)	9614098902	9614098904	9614098906
21.1		1	Clamp with wing nut	9634086014	9634086015	9634086015
21.2		1	Clamp with hex nut	9634086544	9634086467	9634086467
Valve body RA 0.5						
23		1	Valve body, 2 ports, clamp ends/clamp ends			
		1	Valve body, 3 ports, clamp ends/clamp ends			
		1	Valve body, 2 ports, welding ends/clamp ends			
		1	Valve body, 3 ports, welding ends/clamp ends			
Valve body RA 0.4 (Electro polished)						
		1	Valve body, 2 ports, clamp ends/clamp ends			
		1	Valve body, 3 ports, clamp ends/clamp ends			
		1	Valve body, 2 ports, welding ends/clamp ends			
		1	Valve body, 3 ports, welding ends/clamp ends			

	ø12.7 mm 1/2”	ø25 mm 1”	ø38 mm 1 1/2”
Recommended spare parts:			
♦ **Diaphragm, Silicone (incl. Q-doc)**	9614098901	9614098903	9614098905
♦ **Diaphragm, EPDM (incl. Q-doc)**	9614098902	9614098904	9614098906

Parts marked with □ are included in the service kits (actuator)

TD 900-613

Not manufactured anymore

1.5

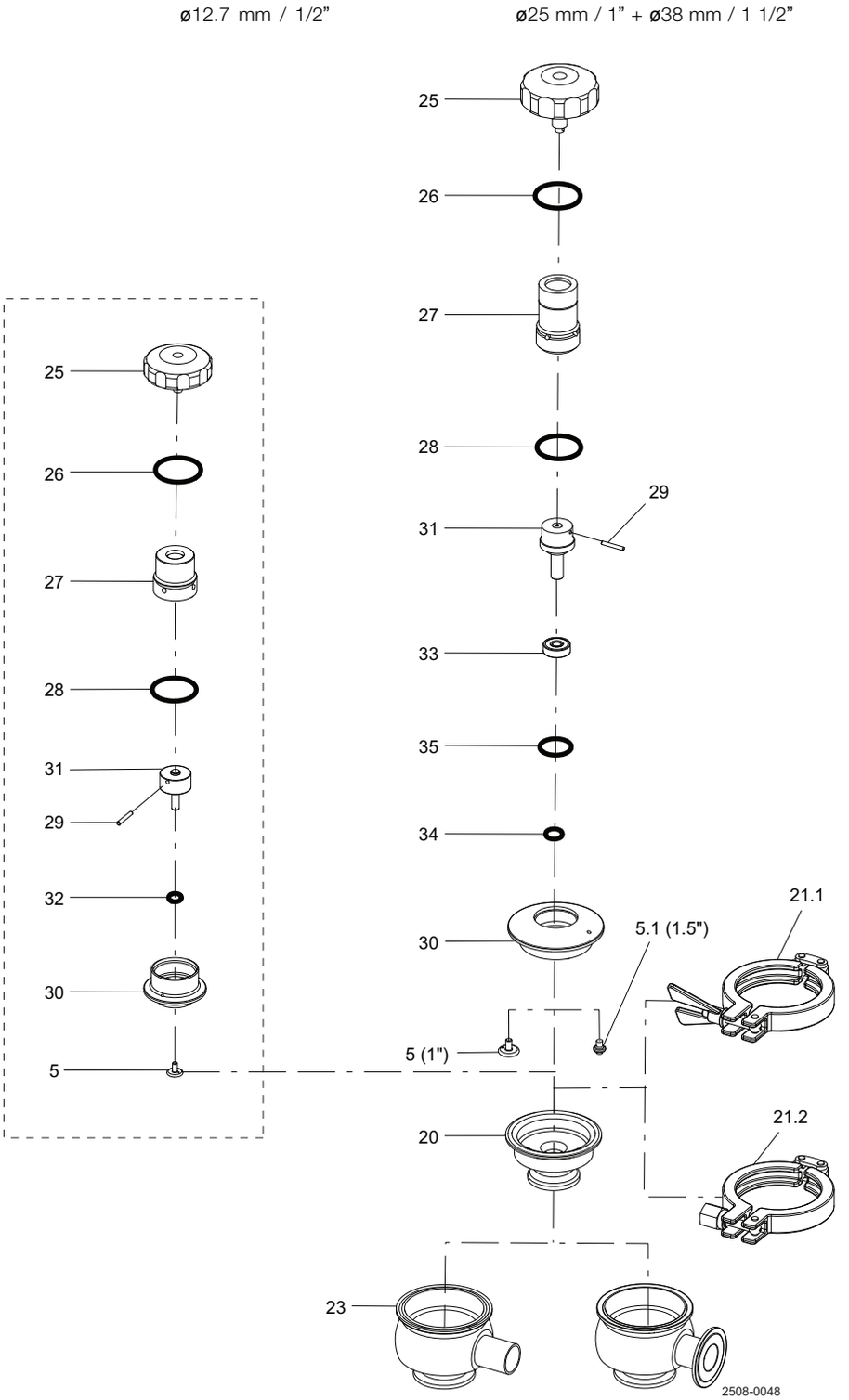

Pos		Qty	Denomination	ø12.7 mm 1/2”	ø25 mm 1”	ø38 mm 1 1/2”
			Manual handle, complete			
25		1	Handle			
26		1	O-ring			
27		1	Housing			
28		1	O-ring			
29		1	Spring pin			
30		1	Flange			
31		1	Rod with bearing			
32		1	O-ring			
5		1	Pressure plate			
5.1		1	Threaded insert			
33		1	Bushing			
34		1	O-ring			
35		1	O-ring			
20	◆	1	Diaphragm, Silicone (incl. Q-doc.)	9614098901	9614098903	9614098905
	◆	1	Diaphragm, EPDM (incl. Q-doc.)	9614098902	9614098904	9614098906
21.1		1	Clamp with wing nut	9634086014	9634086015	9634086015
21.2		1	Clamp with hex nut	9634086544	9634086467	9634086467
Valve body RA 0.5						
23		1	Valve body, 2 ports, clamp ends/clamp ends			
		1	Valve body, 3 ports, clamp ends/clamp ends			
		1	Valve body, 2 ports, welding ends/clamp ends			
		1	Valve body, 3 ports, welding ends/clamp ends			
Valve body RA 0.4 (Electro polished)						
		1	Valve body, 2 ports, clamp ends/clamp ends			
		1	Valve body, 3 ports, clamp ends/clamp ends			
		1	Valve body, 2 ports, welding ends/clamp ends			
		1	Valve body, 3 ports, welding ends/clamp ends			

	ø12.7 mm 1/2”	ø25 mm 1”	ø38 mm 1 1/2”
Recommended spare parts:			
◆ Diaphragm, Silicone (incl. Q-doc)	9614098901	9614098903	9614098905
◆ Diaphragm, EPDM (incl. Q-doc)	9614098902	9614098904	9614098906

TD 900-613

Not manufactured anymore

1.5

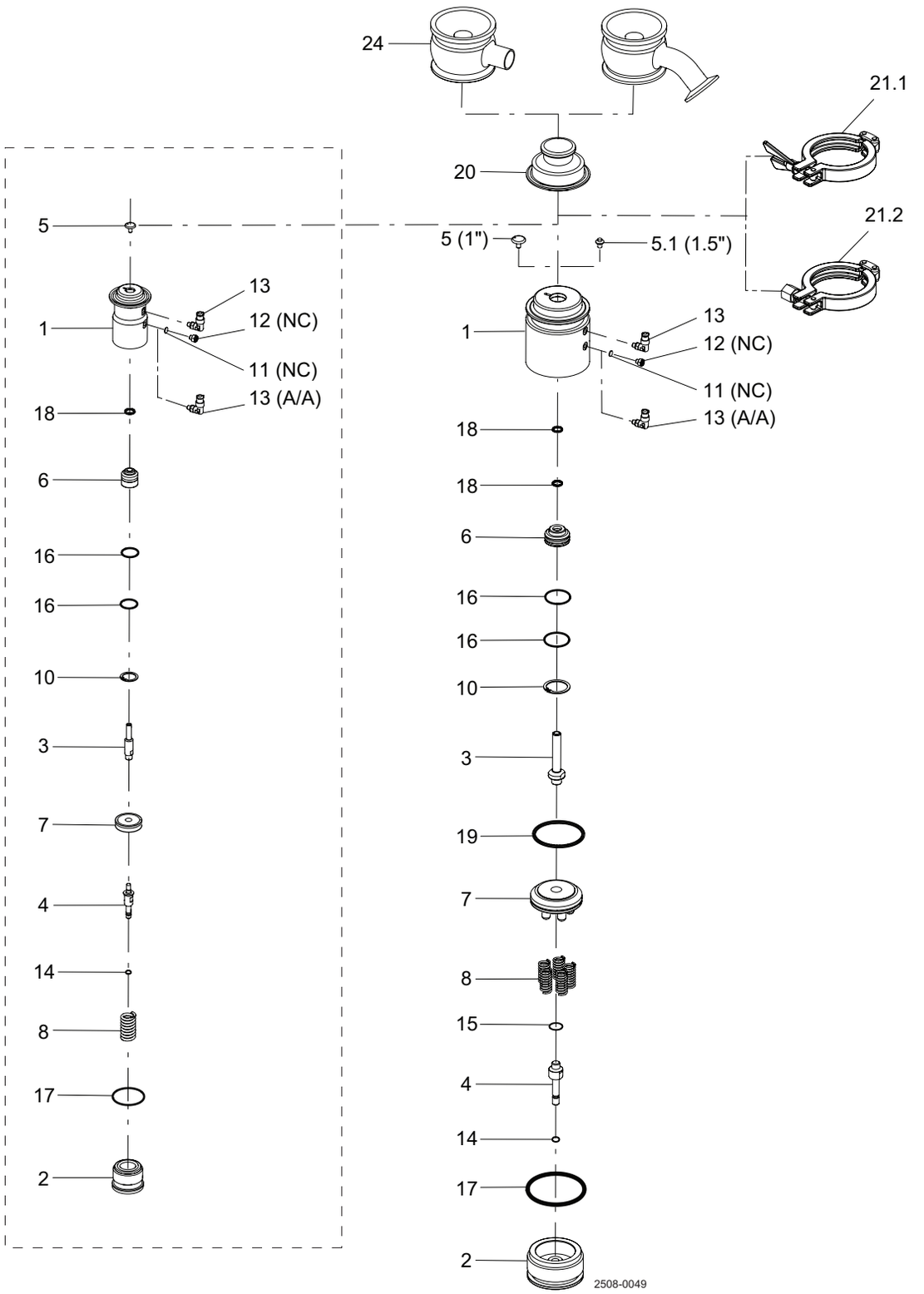

ø12.7 mm / 1/2”

ø25 mm / 1” + ø38 mm / 1 1/2”

Pos		Qty	Denomination	ø12.7 mm 1/2”	ø25 mm 1”	ø38 mm 1 1/2”
			Actuator, complete (NC)			
			Actuator, complete (A/A)			
1		1	Actuator housing			
2		1	Lid			
3		1	Rod			
4		1	Indicator rod			
5		1	Pressure plate			
5.1		1	Threaded insert			
6		1	Bushing			
7		1	Piston			
		5	Spring (NC)			
9		5	Spring stud			
10		1	Clip			
11	□	1	Seal			
12		1	Air silencer (NC)			
13		1	Air fitting (NC)			
		2	Air fitting (A/A)			
14	□	1	O-ring			
15	□	1	O-ring			
16	□	2	O-ring			
17	□	1	O-ring			
18	□	1	X-ring			
	□	2	X-ring			
19	□	1	X-ring			
20	♦	1	Diaphragm, Silicone (incl. Q-doc.)	9614098901	9614098903	9614098905
	♦	1	Diaphragm, EPDM (incl. Q-doc.)	9614098902	9614098904	9614098906
21.1		1	Clamp with wing nut	9634086014	9634086015	9634086015
21.2		1	Clamp with hex nut	9634086544	9634086467	9634086467
Valve body RA 0.5						
24		1	Valve body, 1 ports, clamp ends/clamp ends			
		1	Valve body , 2 ports, clamp ends/clamp ends			
		1	Valve body, 1 ports, welding ends/clamp ends			
		1	Valve body, 2 ports, welding ends/clamp ends			
Valve body RA 0.4 (Electro polished)						
		1	Valve body, 1 ports, clamp ends/clamp ends			
		1	Valve body, 2 ports, clamp ends/clamp ends			
		1	Valve body, 1 ports, welding ends/clamp ends			
		1	Valve body, 2 ports, welding ends/clamp ends			

	ø12.7 mm 1/2”	ø25 mm 1”	ø38 mm 1 1/2”
Recommended spare parts:			
♦ **Diaphragm, Silicone (incl. Q-doc)**	9614098901	9614098903	9614098905
♦ **Diaphragm, EPDM (incl. Q-doc)**	9614098902	9614098904	9614098906

Parts marked with □ are included in the service kits (actuator)

TD 900-613

Not manufactured anymore

1.5

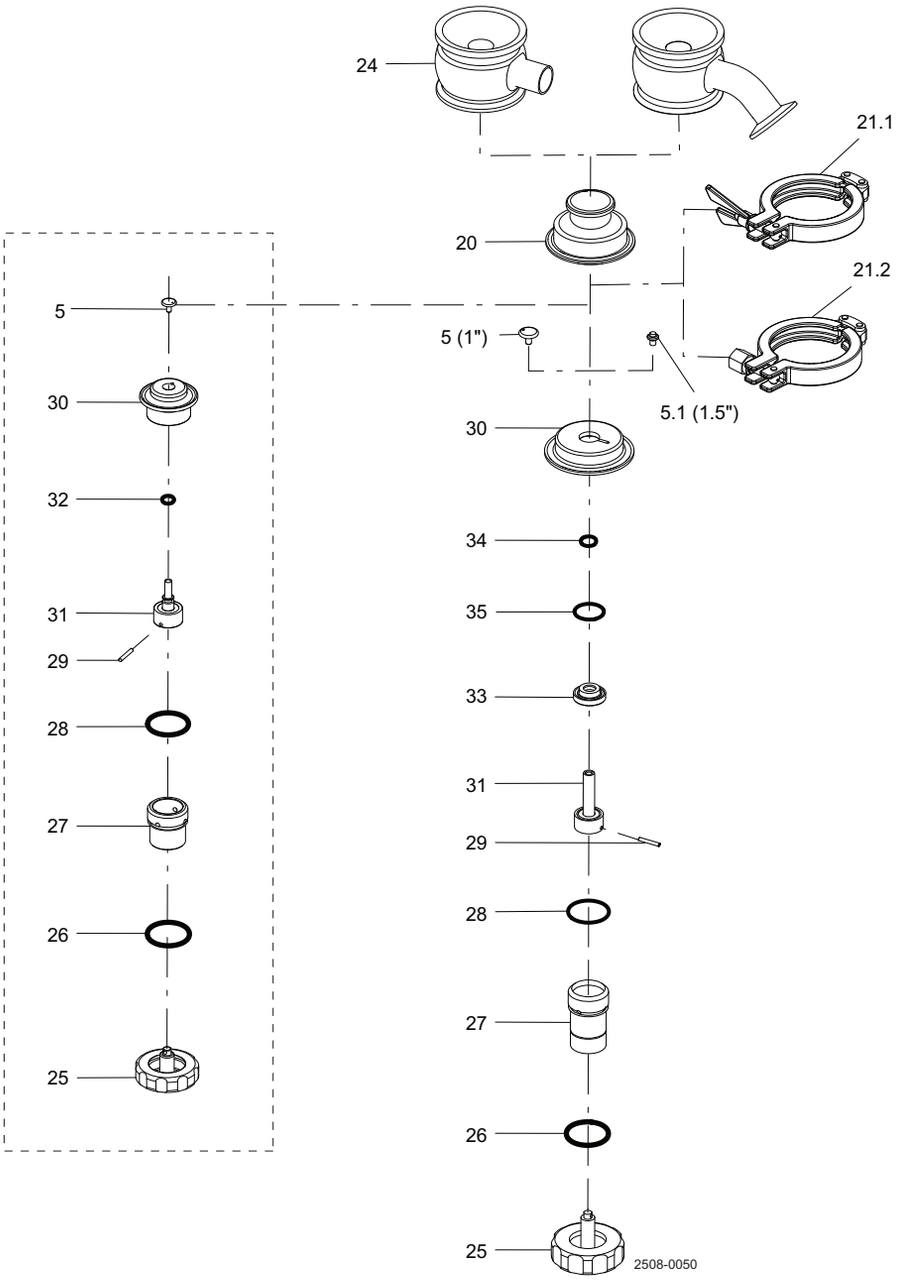

ø12.7 mm / 1/2”

ø25 mm / 1” + ø38 mm / 1 1/2”

Pos		Qty	Denomination	ø12.7 mm 1/2”	ø25 mm 1”	ø38 mm 1 1/2”
			Manual handle, complete			
25		1	Handle			
26		1	O-ring			
27		1	Housing			
28		1	O-ring			
29		1	Spring pin			
30		1	Flange			
31		1	Rod with bearing			
32		1	O-ring			
5		1	Pressure plate			
5.1		1	Threaded insert			
33		1	Bushing			
34		1	O-ring			
35		1	O-ring			
20	◆	1	Diaphragm, Silicone (incl. Q-doc.)	9614098901	9614098903	9614098905
	◆	1	Diaphragm, EPDM (incl. Q-doc.)	9614098902	9614098904	9614098906
21.1		1	Clamp with wing nut	9634086014	9634086015	9634086015
21.2		1	Clamp with hex nut	9634086544	9634086467	9634086467
Valve body RA 0.5						
24		1	Valve body, 1 ports, clamp ends/clamp ends			
		1	Valve body, 2 ports, clamp ends/clamp ends			
		1	Valve body, 1 ports, welding ends/clamp ends			
		1	Valve body, 2 ports, welding ends/clamp ends			
Valve body RA 0.4 (electro polished)						
		1	Valve body, 1 ports, clamp ends/clamp ends			
		1	Valve body, 2 ports, clamp ends/clamp ends			
		1	Valve body, 1 ports, welding ends/clamp ends			
		1	Valve body, 2 ports, welding ends/clamp ends			

	ø12.7 mm 1/2”	ø25 mm 1”	ø38 mm 1 1/2”
Recommended spare parts:			
◆ **Diaphragm, Silicone (incl. Q-doc)**	9614098901	9614098903	9614098905
◆ **Diaphragm, EPDM (incl. Q-doc)**	9614098902	9614098904	9614098906

Parts marked with ☐ are included in the service kits (actuator)

TD 900-613

1.6 Double seal valves

Alfa Laval's Mixproof Valve concept offers you customized and modular solutions that exactly fit your application demands.



Spare parts

SMP-BC Mixproof Valve, shut-off, DN40-DN100 . . . . . 1.6.206
SMP-BC Mixproof Valve, shut-off , DN125/DN150 . . . . . 1.6.212
SMP-BC Mixproof Valve, change-over 1.6.216
SMP-BC Mixproof Valve, installation kit A, B, C and D 1.6.224
SMP-BCA Mixproof Valve, shut-off 1.6.226
SMP-BCA Mixproof Valve, change-over 1.6.232
SMP-BCA Mixproof Valve, installation kit C 1.6.238

Service tools

SMP-BC Mixproof Valve, tool for plug seals 1.6.240
SMP-BC Mixproof Valve, service tool 1.6.242
SMP-BCA Mixproof Valve, tool for plug seals 1.6.244
SMP-TO Mixproof Valve, tool for plug seals 1.6.246

Service tools for obsolete products

SMP-SC Mixproof Valve, tools for plug seals (9709-0804) 1.6.248
SMP-TO Sanitary Mixproof Tank Outlet Valve, tool for plug seals 1.6.250

Spare parts for obsolete products

SMP-SC Mixproof Valve, seal ring plug (9709-0804) 1.6.252
SMP-SC Mixproof Valve, seal ring plug (9512-0804) 1.6.260
SMP-SC Mixproof Valve, three-bodied version (9709-0804) 1.6.264
SMP-SC Mixproof Valve, bonded plug (9410-9709) 1.6.272
SMP-SC Mixproof Valve, spillage-free (9804-0101) 1.6.278
SMP-SC Mixproof Valve, seal ring plug (9410-9708) 1.6.284
SMP-SC Mixproof Valve, seal ring plug (9310-9709) 1.6.290
SMP-SC Mixproof Valve, three-bodied version (9310-9409) 1.6.296
SMP-SC Mixproof Valve, bonded plug (9209 - 9409) 1.6.302
SMP-TO Sanitary Mixproof Tank Outlet Valve 1.6.306

1.6 Double seal valves

Alfa Laval's Mixproof Valve concept offers you customized and modular solutions that exactly fit your application demands.

SMP-EC, (51+63.5 mm + NW50+65) 1.6.310
SMP-EC, (76+101.6 mm + NW80+150) 1.6.314
SMP-EC with SCD 1.6.318
SMP-EC, installation kit A, B, C & F 1.6.324
SMP-EC, installation kit E 1.6.326
SMP-EC, installation kit D 1.6.328

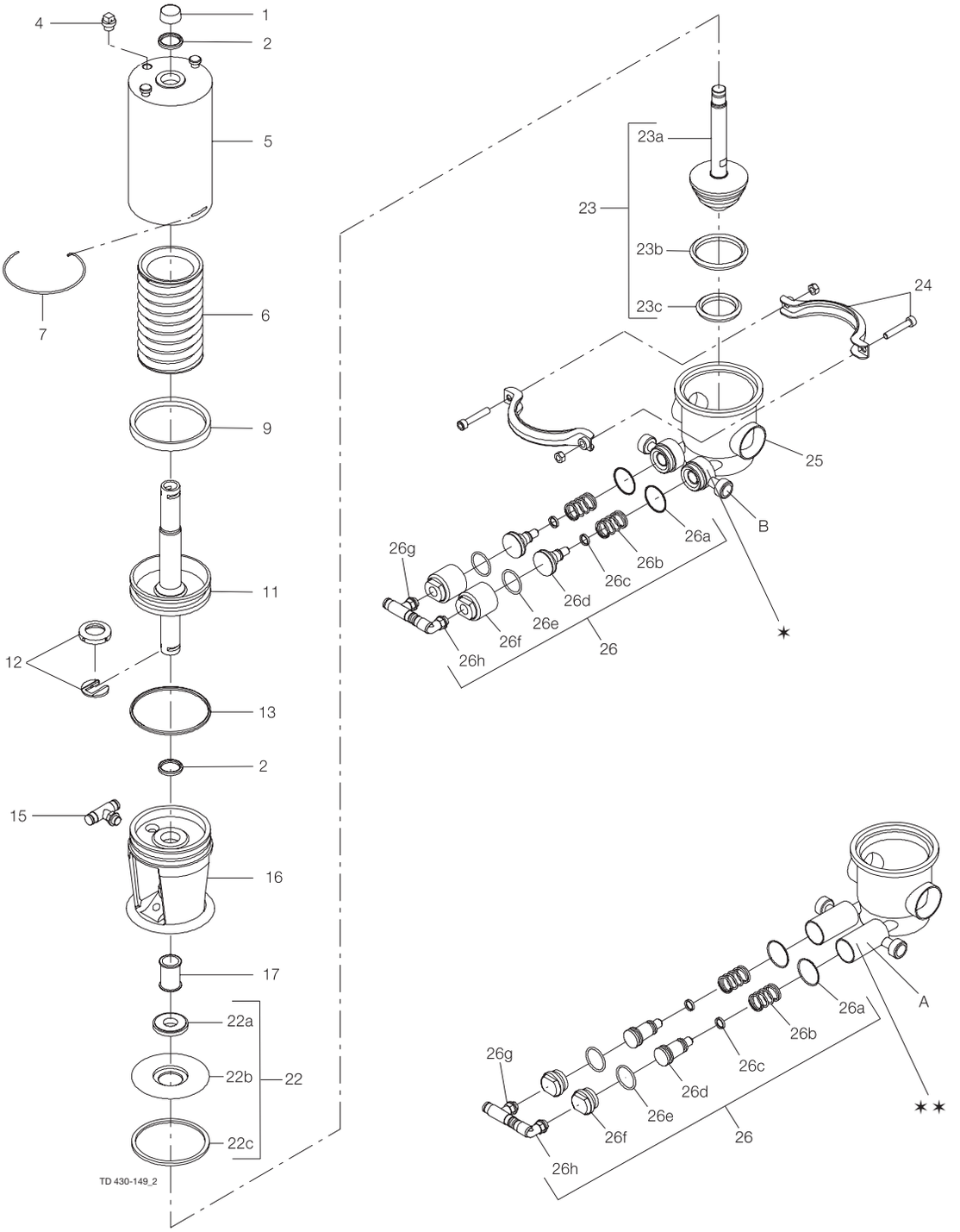

* = CIP/detecting valve.
Diam. ø32.
(Period 9505-)

** = CIP/detecting valve.
Diam. ø27.
(Period 9304-9504)

Pos		Qty	Denomination	DN 40 38 mm	DN 50 51 mm	DN65 63.5 mm	76 mm	DN 80	DN 100 101.6 mm
Actuator									
			Actuator, complete	9612365201	9612365201	9612365401	9612365301	9612365301	9612365301
1		1	Cap	3180105256	3180105256	3180105255	3180105255	3180105255	3180105255
2	□	2	O-ring	22340625	22340625	22340649	22340649	22340649	22340649
4		1	Plug	9613414101	9613414101	9613414101	9613414101	9613414101	9613414101
5		1	Cylinder	3135301391	3135301391	3135301851	3135301851	3135301851	3135301851
6		1	Spring packet, standard (black)	3135306251	3135306251	3135306221	3135306221	3135306221	3135306221
		1	Spring packet, with extra strong spring (white)	3135306252	3135306252	3135306222	3135306222	3135306222	3135306222
7	□	1	Lock wire	3135301511	3135301511	3135301891	3135301891	3135301891	3135301891
9	□	1	O-ring	22340174	22340174	22340175	22340175	22340175	22340175
11		1	Piston	3135306211	3135306211	3135306191	3135306191	3135306191	3135306191
12	□	1	Clip, complete	3135307931	3135307931	3135307932	3135307932	3135307932	3135307932
13	□	1	O-ring	9611990396	9611990396	22340617	22340617	22340617	22340617
15		1	Air fitting, swivel tee	9611992706	9611992706	9611992706	9611992706	9611992706	9611992706
16		1	Bonnet	9612359101	9612359101	9612365001	9612359201	9612359201	9612359201
17	□	1	Guide ring	9612358601	9612358601	9612358603	9612358602	9612358602	9612358602

Pos		Qty	Denomination	DN 40 38 mm	DN 50 51 mm	DN65 63.5 mm	76 mm	DN 80	DN 100 101.6 mm
Stem seal									
22		1	Lip seal kit, EPDM (standard)	9611920078	9611920078	9611920078	9611920142	9611920142	9611920142
		1	Lip seal kit, NBR	9611920079	9611920079	9611920079	9611920143	9611920143	9611920143
		1	Lip seal kit, FPM	9611920080	9611920080	9611920080	9611920144	9611920144	9611920144
22a	♦○	1	Lip seal, EPDM	9612280601	9612280601	9612280601	9612308801	9612308801	9612308801
		1	Lip seal, NBR	9612280602	9612280602	9612280602	9612308802	9612308802	9612308802
		1	Lip seal, FPM	9612280603	9612280603	9612280603	9612308803	9612308803	9612308803
22b		1	Plate	9612280501	9612280501	9612280501	9612308701	9612308701	9612308701
22c	♦○	1	Seal ring, EPDM	3135301281	3135301281	3135301281	3135302051	3135302051	3135302051
		1	Seal ring, NBR	3135301282	3135301282	3135301282	3135302052	3135302052	3135302052
		1	Seal ring, FPM	3135301283	3135301283	3135301283	3135302053	3135302053	3135302053
Valve plug									
23		1	Plug, complete EPDM (standard)	9612354013	9612354014	9612354015	9612354016	9612354017	9612354018
		1	Plug, complete NBR	9612354001	9612354002	9612354003	9612354004	9612354005	9612354006
		1	Plug, complete FPM		9612354008	9612354009	9612354010	9612354011	9612354012
23a		1	Plug	9612349901	9612349902	9612349903	9612349904	9612349905	9612349906
23b	♦○	1	Seal ring, EPDM	9612358415	9612358415	9612358418	9612358421	9612358421	9612358424
		1	Seal ring, NBR	9612358413	9612358413	9612358416	9612358419	9612358419	9612358422
		1	Seal ring, FPM	9612358414	9612358414	9612358417	9612358420	9612358420	9612358423
23c		1	Seal ring, EPDM	9612358403	9612358403	9612358406	9612358409	9612358409	9612358412
	♦○	1	Seal ring, NBR	9612358401	9612358401	9612358404	9612358407	9612358407	9612358410
		1	Seal ring, FPM	9612358402	9612358402	9612358405	9612358408	9612358408	9612358411
Clamp									
24		1	Clamp complete	3132000273	3132000273	3132000273	3132000275	3132000275	3132000275
Valve body									
25		1	Valve body, 2 ports, ISO	9612357301	9612357401	9612357501	9612357601		9612357701
		1	Valve body, 2 ports, DIN	9612357313	9612357413	9612357513		9612357613	9612357713
		1	Valve body, 3 ports, ISO	9612357302	9612357402	9612357502	9612357602		9612357702
		1	Valve body, 3 ports, DIN	9612357314	9612357414	9612357514		9612357614	9612357714

1.6

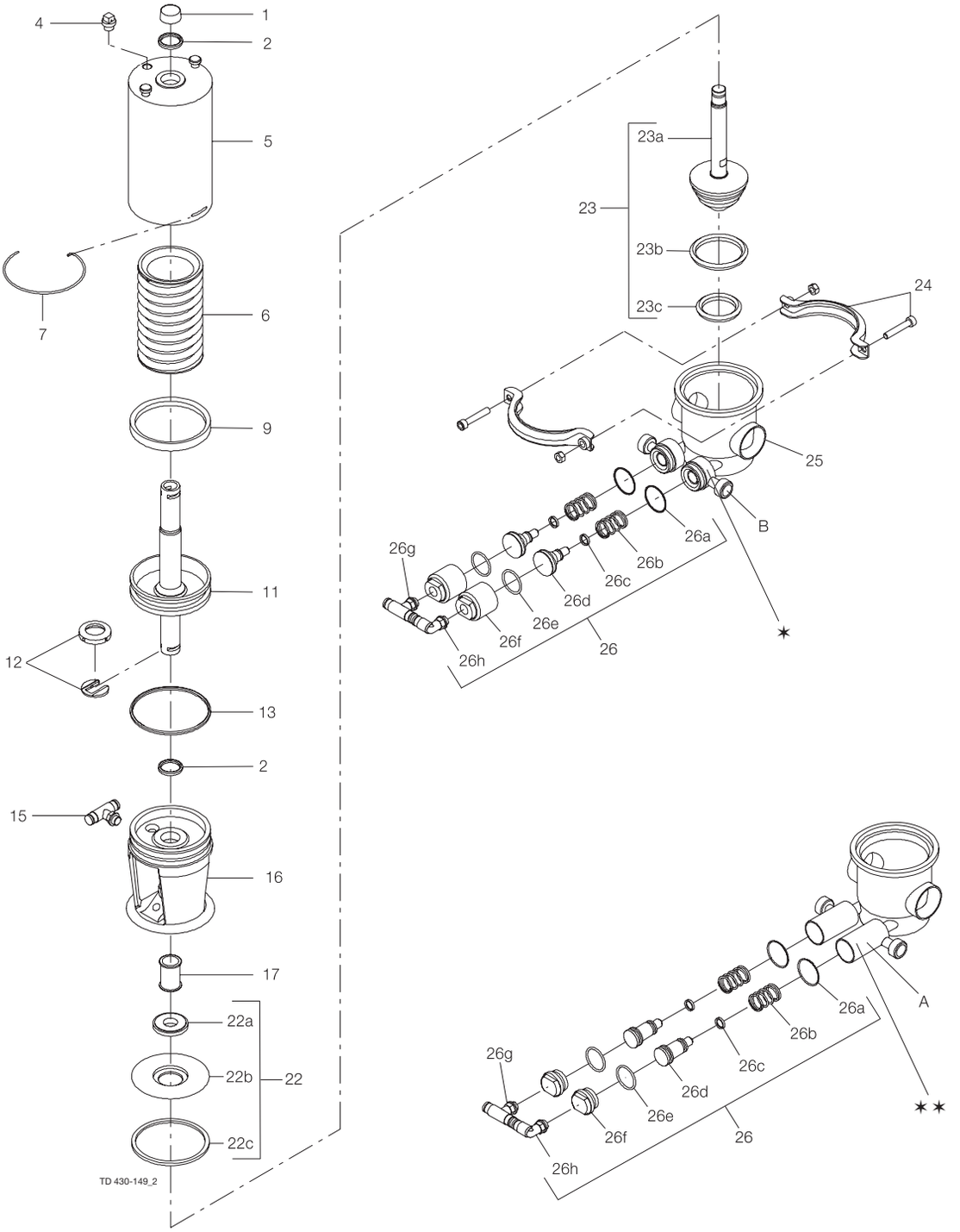

* = CIP/detecting valve.
Diam. ø32.
(Period 9505-)

** = CIP/detecting valve.
Diam. ø27.
(Period 9304-9504)

Pos	Qty	Denomination	DN 40 38 mm	DN 50 51 mm	DN65 63.5 mm	76 mm	DN 80	DN 100 101.6 mm
Detecting/CIP-valves ø32 (Period 9505-)								
26a ♦★	2	O-ring, NBR	9611990096	9611990096	9611990096	9611990096	9611990096	9611990096
26b ★	2	Spring	9612338001	9612338001	9612338001	9612338001	9612338001	9612338001
26c ♦★	2	O-ring, EPDM (standard)	9611993017	9611993017	9611993017	9611993017	9611993017	9611993017
	2	O-ring, NBR	9611993016	9611993016	9611993016	9611993016	9611993016	9611993016
	2	O-ring, FPM	9611993018	9611993018	9611993018	9611993018	9611993018	9611993018
26d ★	2	Spindle	9612441501	9612441501	9612441501	9612441501	9612441501	9612441501
26e ♦★	2	O-ring, HNBR	9611993413	9611993413	9611993413	9611993413	9611993413	9611993413
26f ★	2	Plug	9612441601	9612441601	9612441601	9612441601	9612441601	9612441601
26g ★	1	Air fitting, swivel tee	9611992706	9611992706	9611992706	9611992706	9611992706	9611992706
26h	1	Air fitting, swivel bend	9611994558	9611994558	9611994558	9611994558	9611994558	9611994558
For detecting / CIP-valve ø32								
26 ★	1	Internal parts, EPDM	9611920354	9611920354	9611920354	9611920354	9611920354	9611920354
	1	Internal parts, NBR	9611920270	9611920270	9611920270	9611920270	9611920270	9611920270
	1	Internal parts, , FPM	9611920271	9611920271	9611920271	9611920271	9611920271	9611920271
For detecting/CIP-valve ø27 (Period 9304-9504)								
26a ○Δ	2	O-ring, EPDM	9611992668	9611992668	9611992668	9611992668	9611992668	9611992668
	2	O-ring, NBR	9611992669	9611992669	9611992669	9611992669	9611992669	9611992669
	2	O-ring, FPM	9611992670	9611992670	9611992670	9611992670	9611992670	9611992670
26b Δ	2	Spring	9612338001	9612338001	9612338001	9612338001	9612338001	9612338001
26c ○Δ	2	O-ring, EPDM	9611992671	9611992671	9611992671	9611992671	9611992671	9611992671
	2	O-ring, NBR	9611992672	9611992672	9611992672	9611992672	9611992672	9611992672
	2	O-ring, FPM	9611992673	9611992673	9611992673	9611992673	9611992673	9611992673
26d ○Δ	2	Spindle	9612338201	9612338201	9612338201	9612338201	9612338201	9612338201
26e ○Δ	2	O-ring, EPDM	9611992674	9611992674	9611992674	9611992674	9611992674	9611992674
	2	O-ring, NBR	9611992675	9611992675	9611992675	9611992675	9611992675	9611992675
	2	O-ring, FPM	9611992676	9611992676	9611992676	9611992676	9611992676	9611992676
26f Δ	2	Plug						
26g Δ	1	Air fitting, swivel tee	9611992706	9611992706	9611992706	9611992706	9611992706	9611992706
26h	1	Air fitting, swivel bend	9611992993	9611992993	9611992993	9611992993	9611992993	9611992993
For detecting / CIP-valve ø27								
26	1	Internal parts, EPDM						
	1	Internal parts, NBR						
	1	Internal parts, FPM						

Surface roughness, product wetted parts: Ra ≤ 0.8 µm

Pos	Qty	Denomination	DN 40 38 mm	DN 50 51 mm	DN65 63.5 mm	76 mm	DN 80	DN 100 101.6 mm
Valve plug								
23	1	Plug, complete EPDM (standard)	9612354031	9612354032	9612354033	9612354034	9612354035	9612354036
	1	Plug, complete NBR	9612354019	9612354020	9612354021	9612354022	9612354023	9612354024
	1	Plug, complete FPM	9612354025	9612354026	9612354027	9612354028	9612354029	9612354030
23a	1	Plug	9612349907	9612349908	9612349909	9612349910	9612349911	9612349912
Stem seal								
22b	1	Plate	9612280502	9612280502	9612280502	9612308702	9612308702	9612308702
Valve body								
25	1	Valve body, 2 ports, ISO	9612357317	9612357417	9612357517	9612357617		9612357717
	1	Valve body, 2 ports, DIN	9612357319	9612357419	9612357519		9612357619	9612357719
	1	Valve body, 3 ports, ISO	9612357318	9612357418	9612357518	9612357618		9612357718
	1	Valve body, 3 ports, DIN	9612357320	9612357420	9612357520		9612357620	9612357720

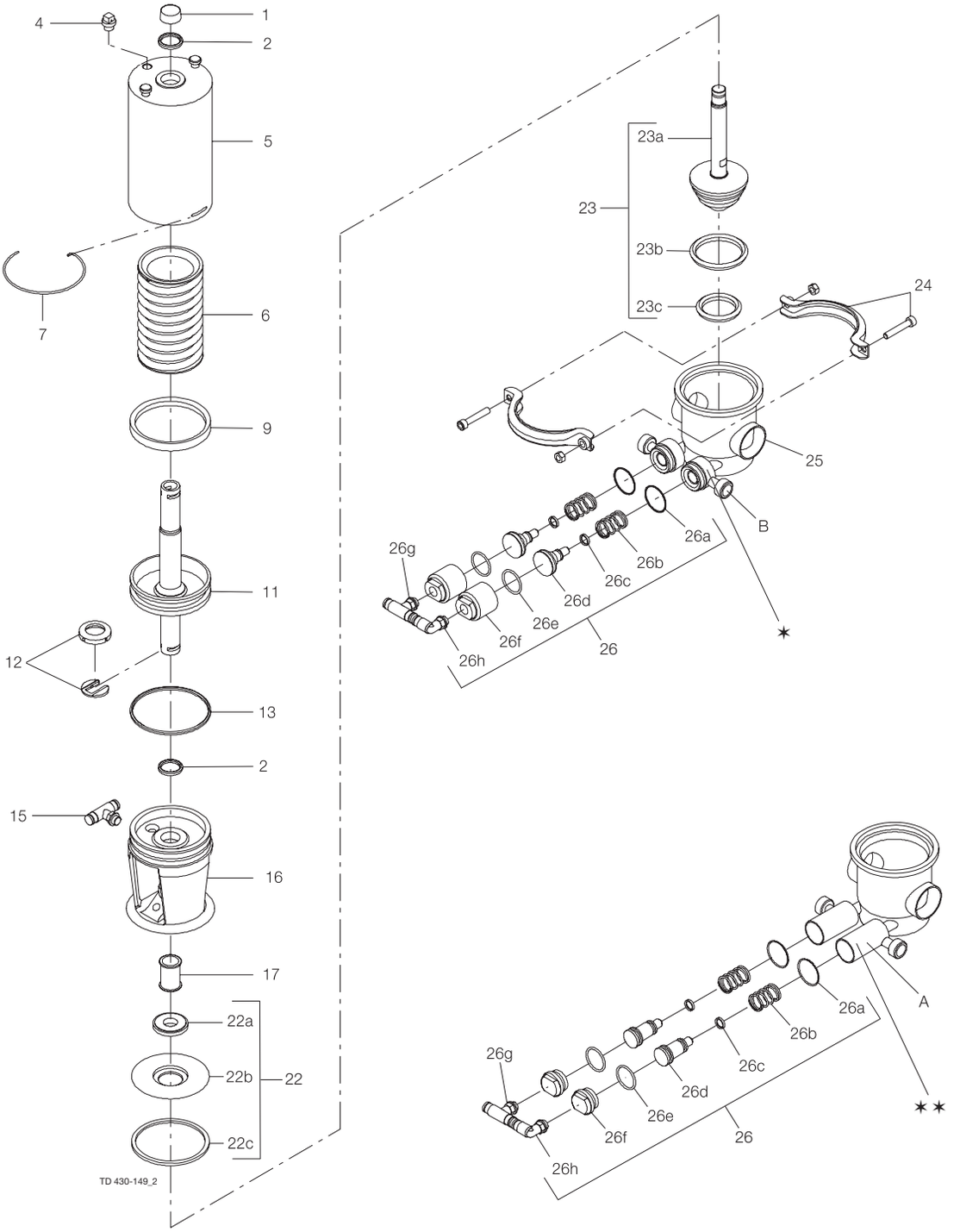

CIP/detecting valve.
Diam. ø32.
(Period 9505-)

CIP/detecting valve.
Diam. ø27.
(Period 9304-9504)

		DN 40 38 mm	DN 50 51 mm	DN65 63.5 mm	DN 80 76 mm	DN 100 101.6 mm
Service Kits for Actuator, detecting/CIP-valve ø32						
□	Service Kit	9611920149	9611920149	9611920150	9611920151	9611920151
Product wetted parts **For detecting / CIP-valve ø32**						
♦	Service kit EPDM	9611920272	9611920272	9611920273	9611920274	9611920275
♦	Service kit NBR	9611920276	9611920276	9611920277	9611920278	9611920279
♦	Service kit FPM	9611920280	9611920280	9611920281	9611920282	9611920283
Product wetted parts **Service kit for valve with ø27 detecting/CIP-valve**						
○	Service kit EPDM	9611920164	9611920164	9611920165	9611920166	9611920167
○	Service kit NBR	9611920168	9611920168	9611920169	9611920170	9611920171
○	Service kit FPM	9611920172	9611920172	9611920173	9611920174	9611920175

Parts marked with □♦○★△ are included in the service kits.
Recommended spare parts: Service kits.

900-102/3

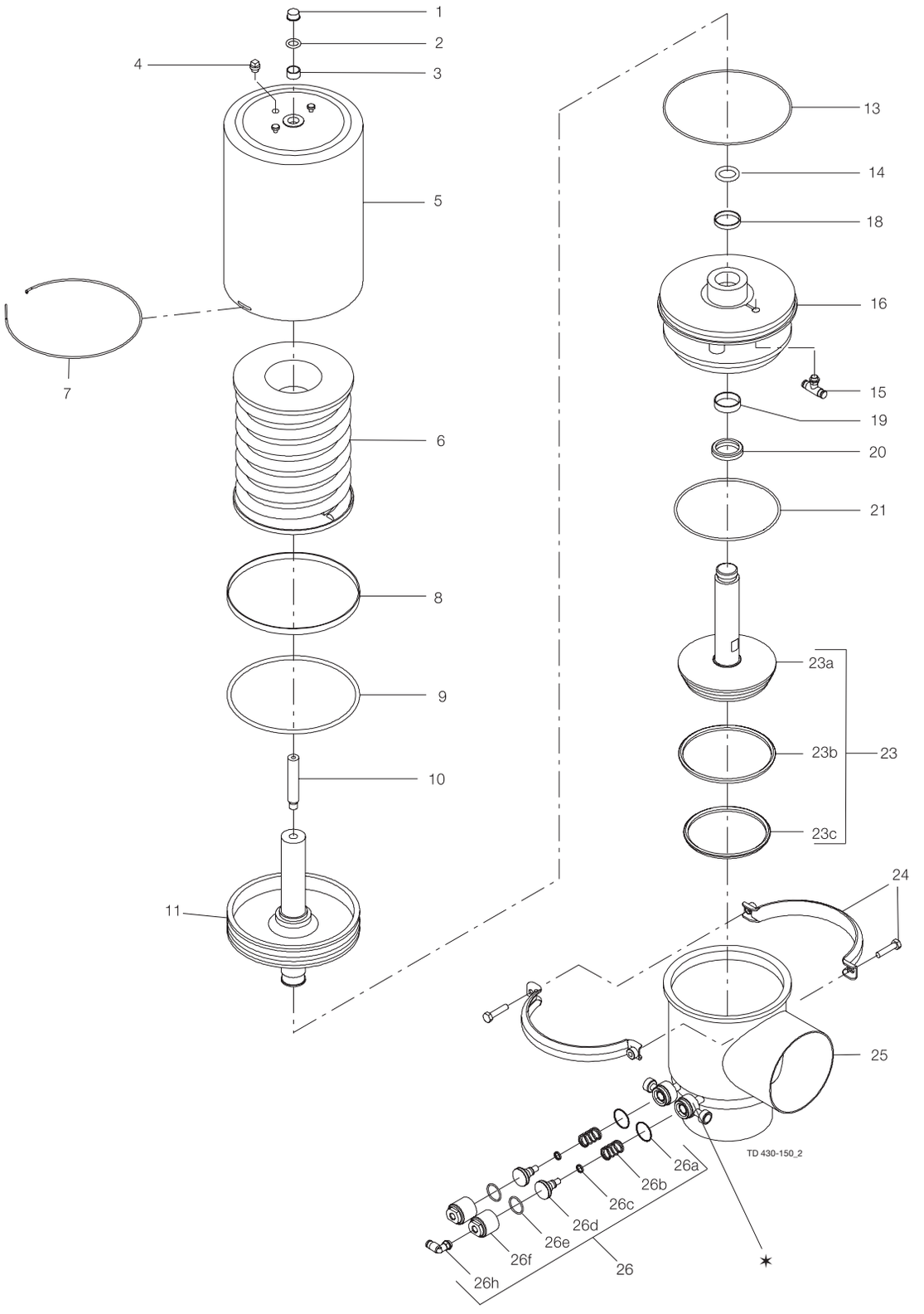

CIP/detecting valve.
Diam. ø32.

Pos		Qty	Denomination	DN125/DN150 NC
Actuator				
			Actuator, complete	9612465707
1		1	Cap	9611993060
2	□	1	O-ring	9611993006
3	□	1	Guide ring	9612292616
4		1	Plug	9613414101
5		1	Cylinder	9612465501
6		1	Spring packet	9612441301
7	□	1	Lock wire	9612380501
8	□	1	Guide ring	9612292623
9	□	1	O-ring	9611993008
10		1	Top pin	9612440801
11		1	Piston	9612441101
13	□	1	O-ring	9611992892
14	□	1	O-ring	9611993012
15		1	Air fitting	9611992706
16		1	Bonnet	9612508001
18	□	1	Guide ring	9612292620
19	□	1	Guide ring	9612292621

Pos		Qty	Denomination	DN125 type 20	DN125 type 30	DN150 type 20	DN150 type 30
Valve body							
20	♦	1	Lip seal, EPDM	9612320407	9612320407	9612320407	9612320407
		1	Lip seal, NBR	9612320408	9612320408	9612320408	9612320408
		1	Lip seal, FPM	9612320409	9612320409	9612320409	9612320409
21	♦	1	Valve body seal ring, EPDM (standard)	9611992937	9611992937	9611992937	9611992937
		1	Valve body seal ring, NBR	9611992938	9611992938	9611992938	9611992938
		1	Valve body seal ring, FPM	9611992939	9611992939	9611992939	9611992939
25		1	Valve body	9612464119	9612464120	9612464127	9612464128
Valve plug							
23		1	Plug, complete, EPDM (standard)	9612428405	9612428405	9612428406	9612428406
		1	Plug, complete, NBR	9612428401	9612428401	9612428402	9612428402
		1	Plug, complete, FPM	9612428403	9612428403	9612428404	9612428404
23a		1	Plug	9612428301	9612428301	9612428302	9612428302
23b	♦	1	Seal ring, EPDM	9612432906	9612432906	9612432906	9612432906
		1	Seal ring, NBR	9612432904	9612432904	9612432904	9612432904
		1	Seal ring, FPM	9612432905	9612432905	9612432905	9612432905
23c	♦	1	Seal ring, EPDM	9612432903	9612432903	9612432903	9612432903
		1	Seal ring, NBR	9612432901	9612432901	9612432901	9612432901
		1	Seal ring, FPM	9612432902	9612432902	9612432902	9612432902
Clamp							
24		1	Clamp complete	961131105	961131105	961131105	961131105
Detecting/CIP-valves ø32							
26a	♦○	2	O-ring, NBR	9611990096	9611990096	9611990096	9611990096
26b	○	2	Spring	9612338001	9612338001	9612338001	9612338001
26c	♦○	2	O-ring, EPDM (standard)	9611993017	9611993017	9611993017	9611993017
		2	O-ring, NBR	9611993016	9611993016	9611993016	9611993016
		2	O-ring, FPM	9611993018	9611993018	9611993018	9611993018
26d	○	2	Spindle	9612441501	9612441501	9612441501	9612441501
26e	♦○	2	O-ring, HNBR	9611993413	9611993413	9611993413	9611993413
26f	○	2	Plug	9612441601	9612441601	9612441601	9612441601
26h		1	Air fitting, swivel bend	9611994558	9611994558	9611994558	9611994558
For detecting / CIP-valve ø32							
26		1	Internal parts, EPDM	9611920354	9611920354	9611920354	9611920354
		1	Internal parts, NBR	9611920270	9611920270	9611920270	9611920270
		1	Internal parts, FPM	9611920271	9611920271	9611920271	9611920271

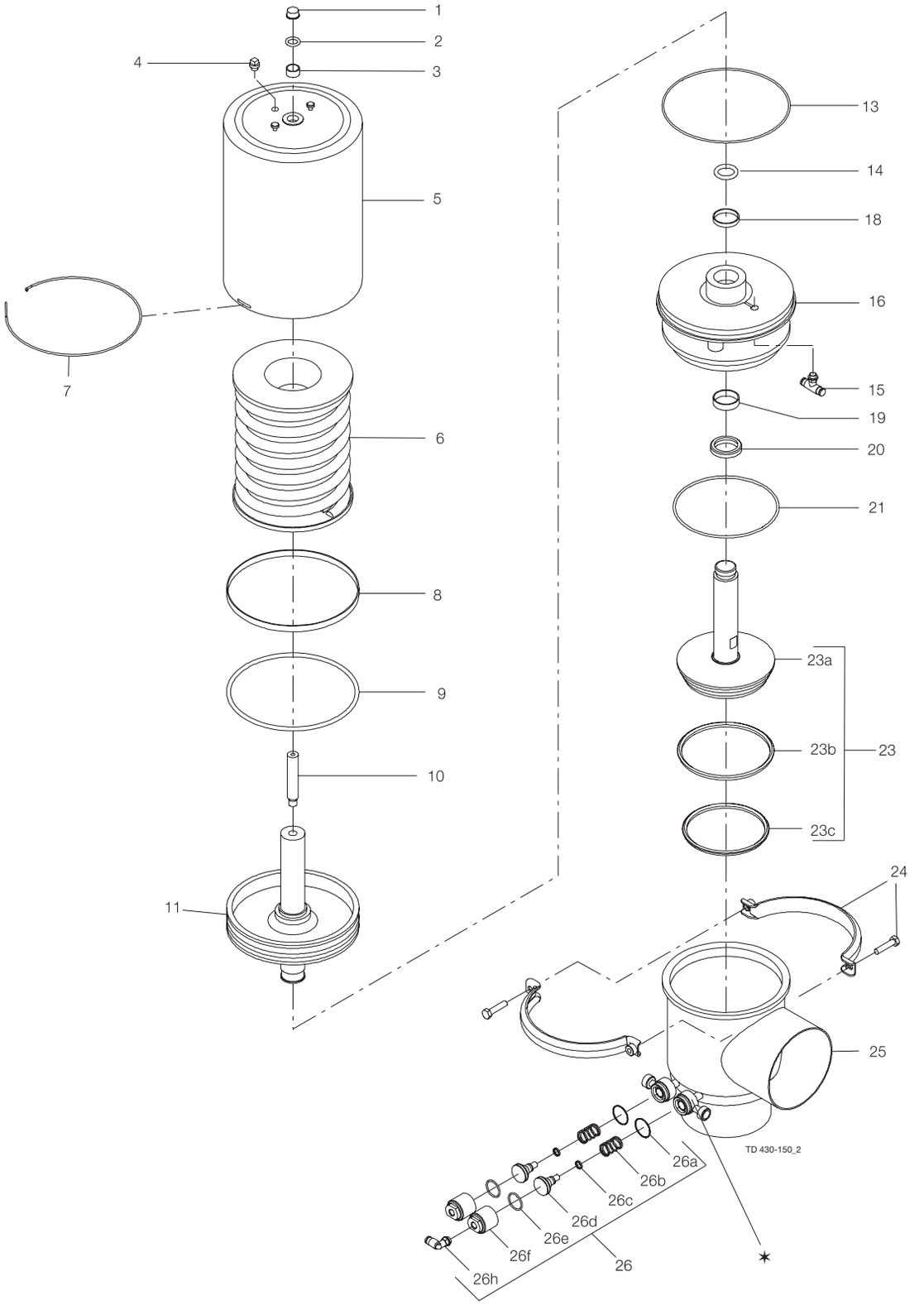

CIP/detecting valve.
Diam. ø32.

Surface roughness, product wetted parts: Ra ≤ 0.8 µm

Pos	Qty	Denomination	DN125 type 20	DN125 type 30	DN150 type 20	DN150 type 30
Valve plug						
23	1	Plug, complete, EPDM (standard)	9612428411	9612428411	9612428412	9612428412
	1	Plug, complete, NBR	9612428407	9612428407	9612428408	9612428408
	1	Plug, complete, FPM	9612428409	9612428409	9612428410	9612428410
23a	1	Plug	9612428303	9612428303	9612428304	9612428304
Valve body						
25	1	Valve body	9612464123	9612464124	9612464131	9612464132

			NC
Service Kit for Actuator			
□		**Service kit**	**9611920296**
Service kit for valve with ø32 detecting / CIP-valve			
♦		**Service kit EPDM**	**9611920297**
♦		**Service kit NBR**	**9611920298**
♦		**Service kit FPM**	**9611920299**

Parts marked with □♦○ are included in the service kit.
Recommended spare parts: Service kits.

900-103/2

1.6

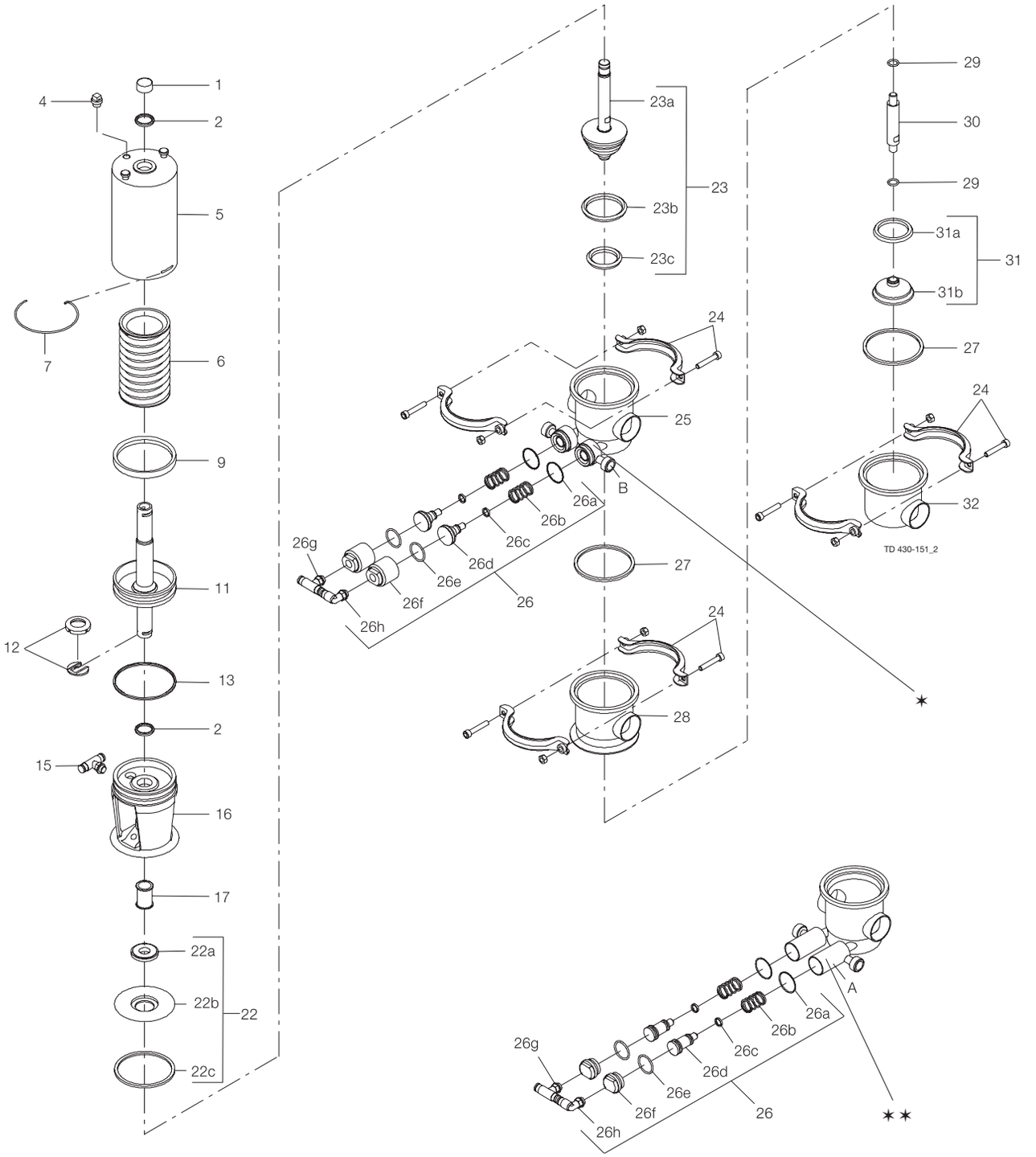

CIP/detecting valve.
Diam. ø32.
(Period 9505-)

CIP/detecting valve.
Diam. ø27.
(Period 9304-9504)

Pos		Qty	Denomination	DN 40 38 mm	DN 50 51 mm	DN65 63.5 mm	76 mm	DN 80	DN 100 101.6 mm
Actuator									
			Actuator, complete	9612365201	9612365201	9612365401	9612365301	9612365301	9612365301
1		1	Cap	3180105256	3180105256	3180105255	3180105255	3180105255	3180105255
2	□	2	O-ring	22340625	22340625	22340649	22340649	22340649	22340649
4		1	Plug	9613414101	9613414101	9613414101	9613414101	9613414101	9613414101
5		1	Cylinder	3135301391	3135301391	3135301851	3135301851	3135301851	3135301851
6		1	Spring packet, standard (black)	3135306251	3135306251	3135306221	3135306221	3135306221	3135306221
		1	Spring packet, with extra strong spring (white)	3135306252	3135306252	3135306222	3135306222	3135306222	3135306222
7	□	1	Lock wire	3135301511	3135301511	3135301891	3135301891	3135301891	3135301891
9	□	1	O-ring	22340174	22340174	22340175	22340175	22340175	22340175
11		1	Piston	3135306211	3135306211	3135306191	3135306191	3135306191	3135306191
12	□	1	Clip, complete	3135307931	3135307931	3135307932	3135307932	3135307932	3135307932
13	□	1	O-ring	9611990396	9611990396	22340617	22340617	22340617	22340617
15		1	Air fitting, swivel tee	9611992706	9611992706	9611992706	9611992706	9611992706	9611992706
16		1	Bonnet	9612359101	9612359101	9612365001	9612359201	9612359201	9612359201
17	□	1	Guide ring	9612358601	9612358601	9612358603	9612358602	9612358602	9612358602

Pos		Qty	Denomination	DN 40 38 mm	DN 50 51 mm	DN65 63.5 mm	76 mm	DN 80	DN 100 101.6 mm
Stem seal									
22		1	Lip seal kit, EPDM (standard)	9611920078	9611920078	9611920078	9611920142	9611920142	9611920142
		1	Lip seal kit, NBR	9611920079	9611920079	9611920079	9611920143	9611920143	9611920143
		1	Lip seal kit, FPM	9611920080	9611920080	9611920080	9611920144	9611920144	9611920144
22a	♦○	1	Lip seal, EPDM	9612280601	9612280601	9612280601	9612308801	9612308801	9612308801
		1	Lip seal, NBR	9612280602	9612280602	9612280602	9612308802	9612308802	9612308802
		1	Lip seal, FPM	9612280603	9612280603	9612280603	9612308803	9612308803	9612308803
22b		1	Plate	9612280501	9612280501	9612280501	9612308701	9612308701	9612308701
22c	♦○	1	Seal ring, EPDM	3135301281	3135301281	3135301281	3135302051	3135302051	3135302051
		1	Seal ring, NBR	3135301282	3135301282	3135301282	3135302052	3135302052	3135302052
		1	Seal ring, FPM	3135301283	3135301283	3135301283	3135302053	3135302053	3135302053
Valve plug									
23		1	Plug, upper, complete EPDM (standard)	9612353813	9612353814	9612353815	9612353816	9612353817	9612353818
		1	Plug, upper, complete NBR	9612353801	9612353802	9612353803	9612353804	9612353805	9612353806
		1	Plug, upper, complete FPM	9612353807	9612353808	9612353809	9612353810	9612353811	9612353812
23a		1	Plug, upper	9612349701	9612349702	9612349703	9612349704	9612349705	9612349706
23b	♦○	1	Seal ring, EPDM	9612358415	9612358415	9612358418	9612358421	9612358421	9612358424
		1	Seal ring, NBR	9612358413	9612358413	9612358416	9612358419	9612358419	9612358422
		1	Seal ring, FPM	9612358414	9612358414	9612358417	9612358420	9612358420	9612358423
23c	♦○	1	Seal ring, EPDM	9612358403	9612358403	9612358406	9612358409	9612358409	9612358412
		1	Seal ring, NBR	9612358401	9612358401	9612358404	9612358407	9612358407	9612358410
		1	Seal ring, FPM	9612358402	9612358402	9612358405	9612358408	9612358408	9612358411
Clamp									
24		3	Clamp complete	3132000273	3132000273	3132000273	3132000275	3132000275	3132000275
27	♦○	2	Seal ring, EPDM (standard)	3135301281	3135301281	3135301281	3135302051	3135302051	3135302051
		2	Seal ring, NBR	3135301282	3135301282	3135301282	3135302052	3135302052	3135302052
		2	Seal ring, FPM	3135301283	3135301283	3135301283	3135302053	3135302053	3135302053
29	♦○	2	O-ring, EPDM	9611992694	9611992694	9611992694	9611992697	9611992697	9611992697
		2	O-ring, NBR	9611992695	9611992695	9611992695	9611992698	9611992698	9611992698
		2	O-ring, FPM	9611992696	9611992696	9611992696	9611992699	9611992699	9611992699
30		1	Stem, lower	9612353901	9612353902	9612353903	9612353904	9612353905	9612353906

1.6

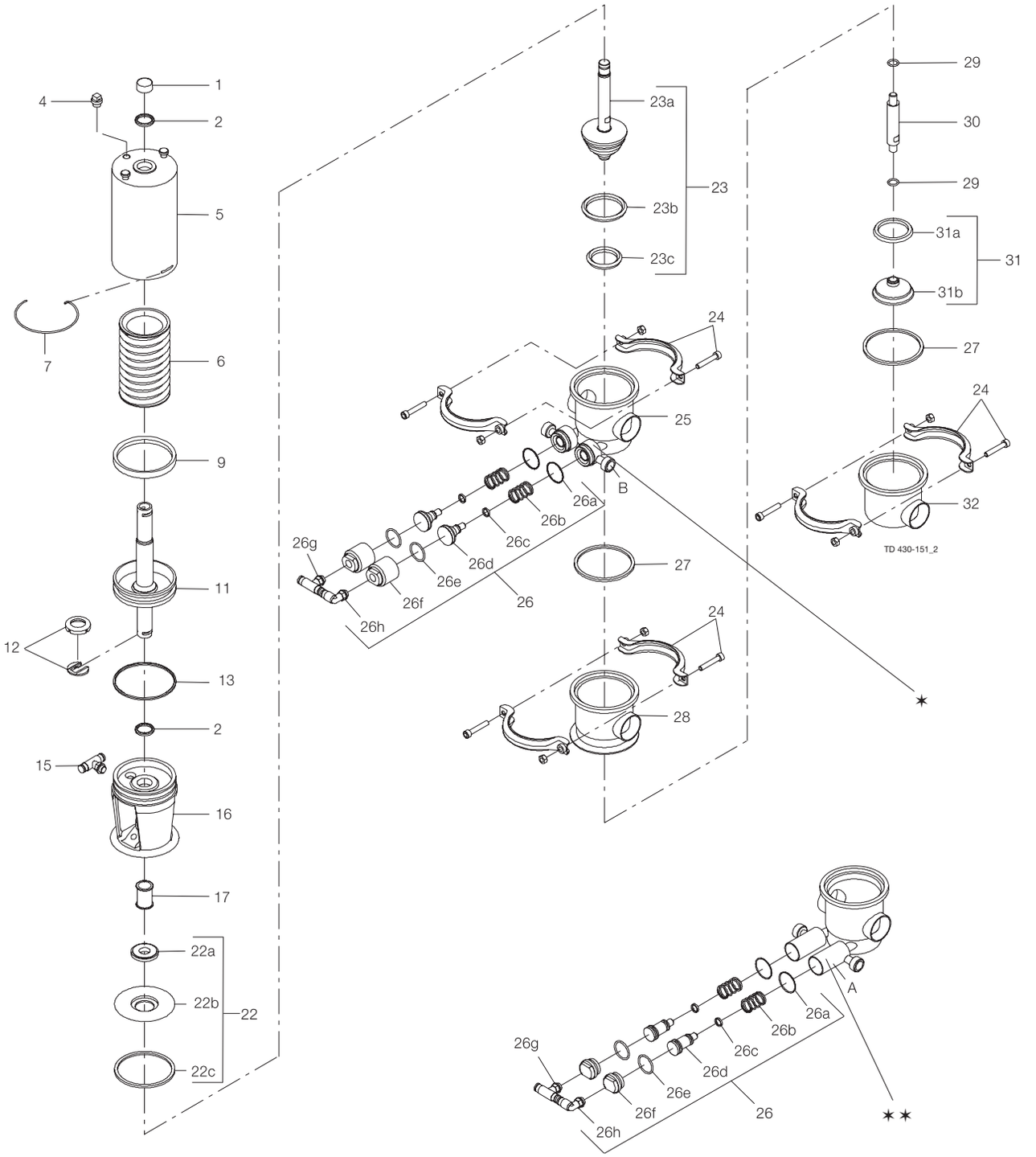

CIP/detecting valve.
Diam. ø32.
(Period 9505-)

CIP/detecting valve.
Diam. ø27.
(Period 9304-9504)

Pos	Qty	Denomination	DN 40 38 mm	DN 50 51 mm	DN65 63.5 mm	76 mm	DN 80	DN 100 101.6 mm
Valve plug								
31	1	Plug, lower, complete EPDM (standard)	9612359509	9612359509	9612359510	9612359511	9612359511	9612359512
	1	Plug, lower, complete NBR	9612359501	9612359501	9612359502	9612359503	9612359503	9612359504
	1	Plug, lower, complete FPM	9612359505	9612359505	9612359506	9612359507	9612359507	9612359508
31a ◆○	1	Seal ring, EPDM	9612358427	9612358427	9612358430	9612358433	9612358433	9612358436
	1	Seal ring, NBR	9612358425	9612358425	9612358428	9612358431	9612358431	9612358434
	1	Seal ring, FPM	9612358426	9612358426	9612358429	9612358432	9612358432	9612358435
31b	1	Plug, lower	9612346101	9612346101	9612346201	9612346301	9612346301	9612346401
Valve body								
25	1	Valve body, upper, 1 port, ISO	9612356201	9612356301	9612356401	9612356501		9612356601
	1	Valve body, upper, 1 port, DIN	9612356213	9612356313	9612356413		9612356513	9612356613
	1	Valve body, upper, 2 ports, ISO	9612356202	9612356302	9612356402	9612356502		9612356602
	1	Valve body, upper, 2 ports, DIN	9612356214	9612356314	9612356414		9612356514	9612356614
28	1	Valve body, middle, 1 port, ISO	9612351001	9612351101	9612351201	9612351301		9612351401
	1	Valve body, middle, 1 port, DIN	9612352501	9612352601	9612352701		9612352801	9612352901
	1	Valve body, middle, 2 ports, ISO	9612351002	9612351102	9612351202	9612351302		9612351402
	1	Valve body, middle, 2 ports, DIN	9612352502	9612352602	9612352702		9612352802	9612352902
32	1	Valve body, lower, 1 port, ISO	3135305821	3135305831	3135305841	3135305851		3135305861
	1	Valve body, lower, 1 port, DIN	9612322101	9612322201	9612322301		9612322401	9612322501
	1	Valve body, lower, 2 ports, ISO	3135305822	3135305832	3135305842	3135305852		3135305862
	1	Valve body, lower, 2 ports, DIN	9612322102	9612322202	9612322302		9612322402	9612322502
Detecting/CIP-valves ø32 (Period 9505-)								
26a ◆★	2	O-ring, NBR						
26b ★	2	Spring						
26c ◆★	2	O-ring, EPDM (standard)						
	2	O-ring, NBR						
	2	O-ring, FPM						
26d ★	2	Spindle						
26e ◆★	2	O-ring, HNBR						
26f ★	2	Plug						
26g ★	1	Air fitting, swivel tee						
26h	1	Air fitting, swivel bend						
For detecting / CIP-valve ø32								
26 ★	1	Internal parts, EPDM	9611920354	9611920354	9611920354	9611920354	9611920354	9611920354
	1	Internal parts, NBR	9611920270	9611920270	9611920270	9611920270	9611920270	9611920270
	1	Internal parts, , FPM	9611920271	9611920271	9611920271	9611920271	9611920271	9611920271
For detecting/CIP-valve ø27 (Period 9304-9504)								
26a ○△	2	O-ring, EPDM						
	2	O-ring, NBR						
	2	O-ring, FPM						
26b △	2	Spring						
26c ○△	2	O-ring, EPDM						
	2	O-ring, NBR						
	2	O-ring, FPM						
26d ○△	2	Spindle						
26e ○△	2	O-ring, EPDM						
	2	O-ring, NBR						
	2	O-ring, FPM						
26f △	2	Plug						
26g △	1	Air fitting, swivel tee						
26h	1	Air fitting, swivel bend						
For detecting / CIP-valve ø27								
26	1	Internal parts, EPDM						
	1	Internal parts, NBR						
	1	Internal parts, FPM						

1.6

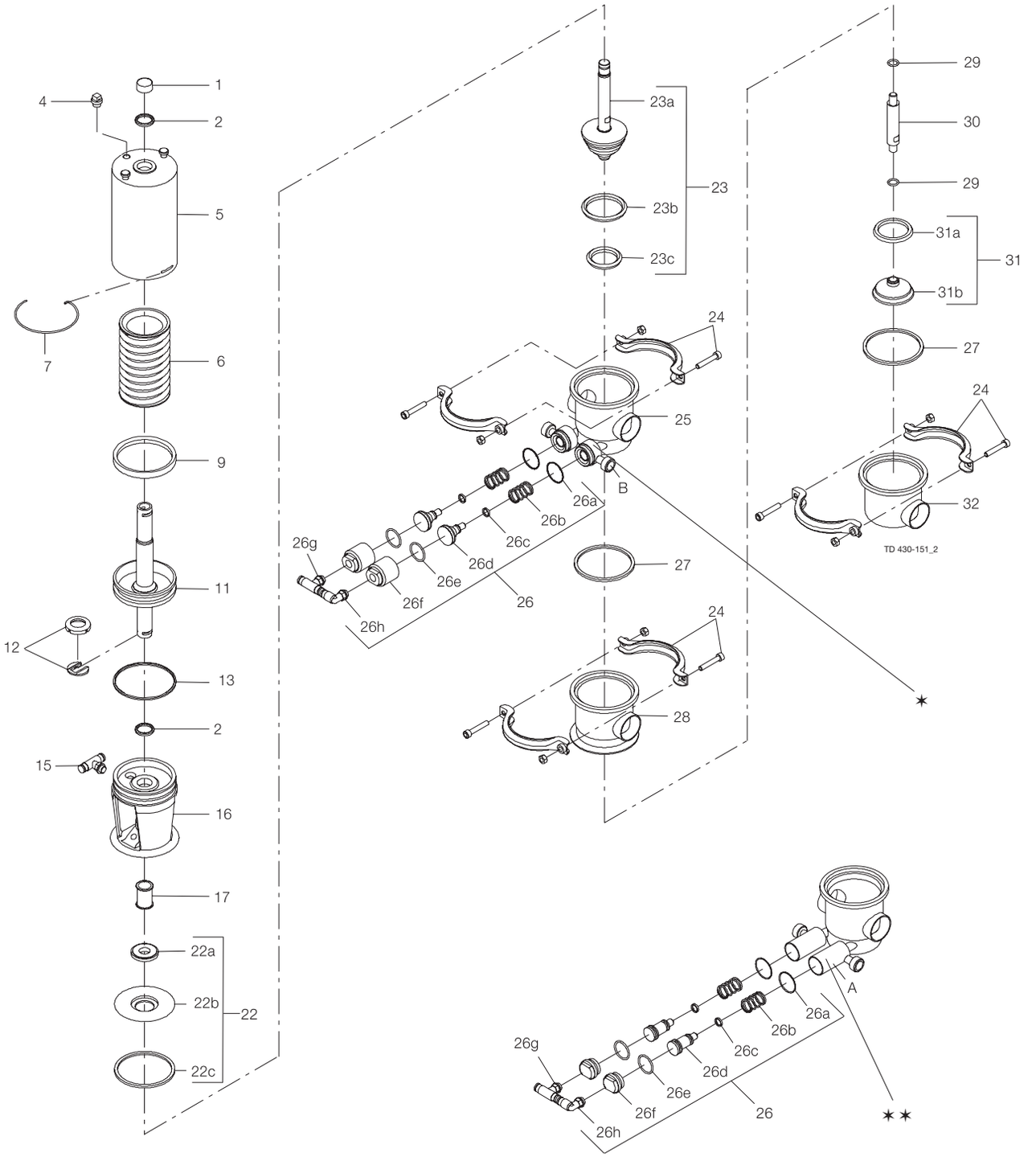

CIP/detecting valve.
Diam. ø32.
(Period 9505-)

CIP/detecting valve.
Diam. ø27.
(Period 9304-9504)

Surface roughness, product wetted parts: Ra ≤ 0.8 µm

Pos	Qty	Denomination	DN 40 38 mm	DN 50 51 mm	DN65 63.5 mm	76 mm	DN 80	DN 100 101.6 mm
Valve plug								
23	1	Plug, upper, complete EPDM (standard)	9612353831	9612353832	9612353833	9612353834	9612353835	9612353836
	1	Plug, upper, complete NBR	9612353819	9612353820	9612353821	9612353822	9612353823	9612353824
	1	Plug, upper, complete FPM	9612353825	9612353826	9612353827	9612353828	9612353829	9612353830
23a	1	Plug, upper	9612349707	9612349708	9612349709	9612349710	9612349711	9612349712
30	1	Stem, lower	9612353907	9612353908	9612353909	9612353910	9612353911	9612353912
31	1	Plug, lower, complete EPDM (standard)	9612359521	9612359521	9612359522	9612359523	9612359523	9612359524
	1	Plug, lower, complete NBR	9612359513	9612359513	9612359514	9612359515	9612359515	9612359516
	1	Plug, lower, complete FPM	9612359517	9612359517	9612359518	9612359519	9612359519	9612359520
31b	1	Plug, lower	9612346102	9612346102	9612346202	9612346302	9612346302	9612346402
Stem seal								
22b	1	Plate	9612280502	9612280502	9612280502	9612308702	9612308702	9612308702
Valve body								
25	1	Valve body, upper, 1 port, ISO	9612356217	9612356317	9612356417	9612356517		9612356617
	1	Valve body, upper, 1 port, DIN	9612356219	9612356319	9612356419		9612356519	9612356619
	1	Valve body, upper, 2 ports, ISO	9612356218	9612356318	9612356418	9612356518		9612356618
	1	Valve body, upper, 2 ports, DIN	9612356220	9612356320	9612356420		9612356520	9612356620
28	1	Valve body, middle, 1 port, ISO	9612351007	9612351107	9612351207	9612351307		9612351407
	1	Valve body, middle, 1 port, DIN	9612352503	9612352603	9612352703		9612352803	9612352903
	1	Valve body, middle, 2 ports, ISO	9612351008	9612351108	9612351208	9612351308		9612351408
	1	Valve body, middle, 2 ports, DIN	9612352504	9612352604	9612352704		9612352804	9612352904
32	1	Valve body, lower, 1 port, ISO	3135305827	3135305837	3135305847	3135305857		3135305867
	1	Valve body, lower, 1 port, DIN	9612322103	9612322203	9612322303		9612322403	9612322503
	1	Valve body, lower, 2 ports, ISO	3135305828	3135305838	3135305848	3135305858		3135305868
	1	Valve body, lower, 2 ports, DIN	9612322104	9612322204	9612322304		9612322404	9612322504

1.6

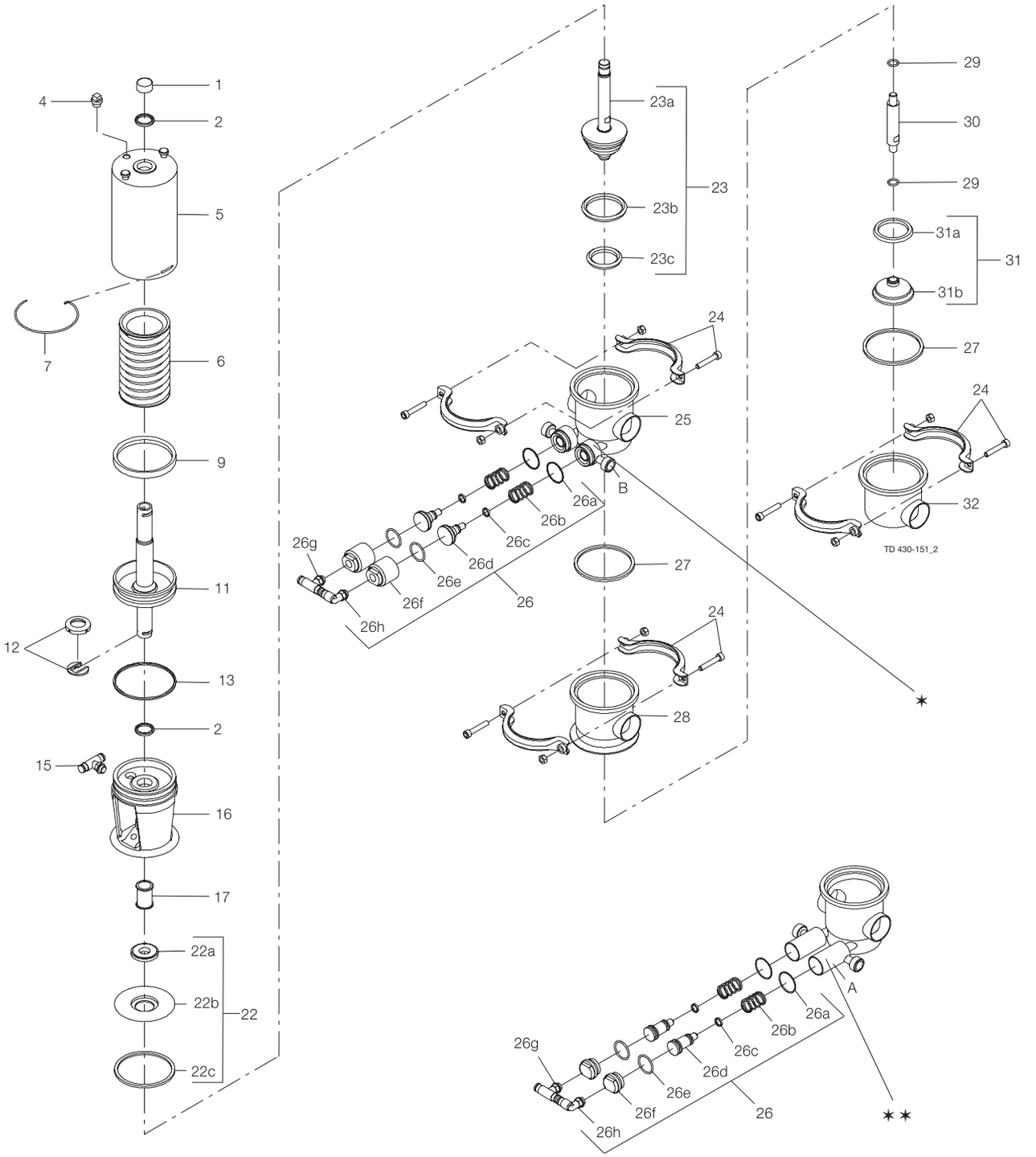

CIP/detecting valve.
Diam. ø32.
(Period 9505-)

CIP/detecting valve.
Diam. ø27.
(Period 9304-9504)

		DN 40 38 mm	DN 50 51 mm	DN65 63.5 mm	DN 80 76 mm	DN 100 101.6 mm
Service Kit for Actuator, detecting / CIP-valve ø32						
□	Service kit	9611920149	9611920149	9611920150	9611920151	9611920151
Service Kit for Product wetted parts - detecting / CIP-valve ø32						
♦	Service kit EPDM	9611920284	9611920284	9611920285	9611920286	9611920287
♦	Service kit NBR	9611920288	9611920288	9611920289	9611920290	9611920291
♦	Service kit FPM	9611920292	9611920292	9611920293	9611920294	9611920295
Service Kit for Product wetted parts - valve with ø27 detecting/CIP-valve						
○	Service kit EPDM	9611920152	9611920152	9611920153	9611920154	9611920155
○	Service kit NBR	9611920156	9611920156	9611920157	9611920158	9611920159
○	Service kit FPM	9611920160	9611920160	9611920161	9611920162	9611920163

Parts marked with □♦○★△ are included in the service kits.

Recommended Spare Parts: Service kits.

900-104/2

1.6

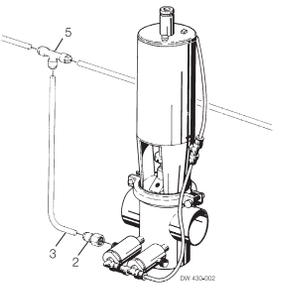

Installation kit A

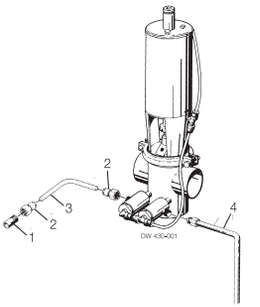

Installation kit B

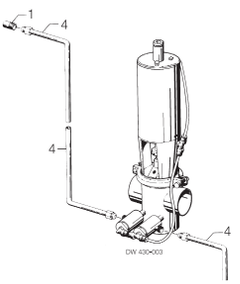

Installation kit C

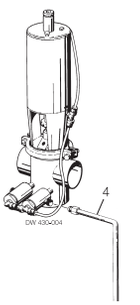

Installation kit D

Installation kit A

Pos	Qty	Denomination	AISI 316L
2	1	Fitting PVDF female	9611992372
3	1	Tube PVDF	9611992607
5	1	Fitting PVDF	9611992785

Installation kit B

Pos	Qty	Denomination	AISI 316L
1	1	Welding male part	3135707471
2	2	Fitting PVDF female	9611992372
3	1	Tube PVDF	9611992607
4	1	Leakage tube	3135710013

Installation kit C

Pos	Qty	Denomination	AISI 316L
1	1	Welding male part	3135707471
4	3	Leakage tube	3135710013

Installation kit D

Pos	Qty	Denomination	AISI 316L
4	1	Leakage tube	3135710013

900-106/1

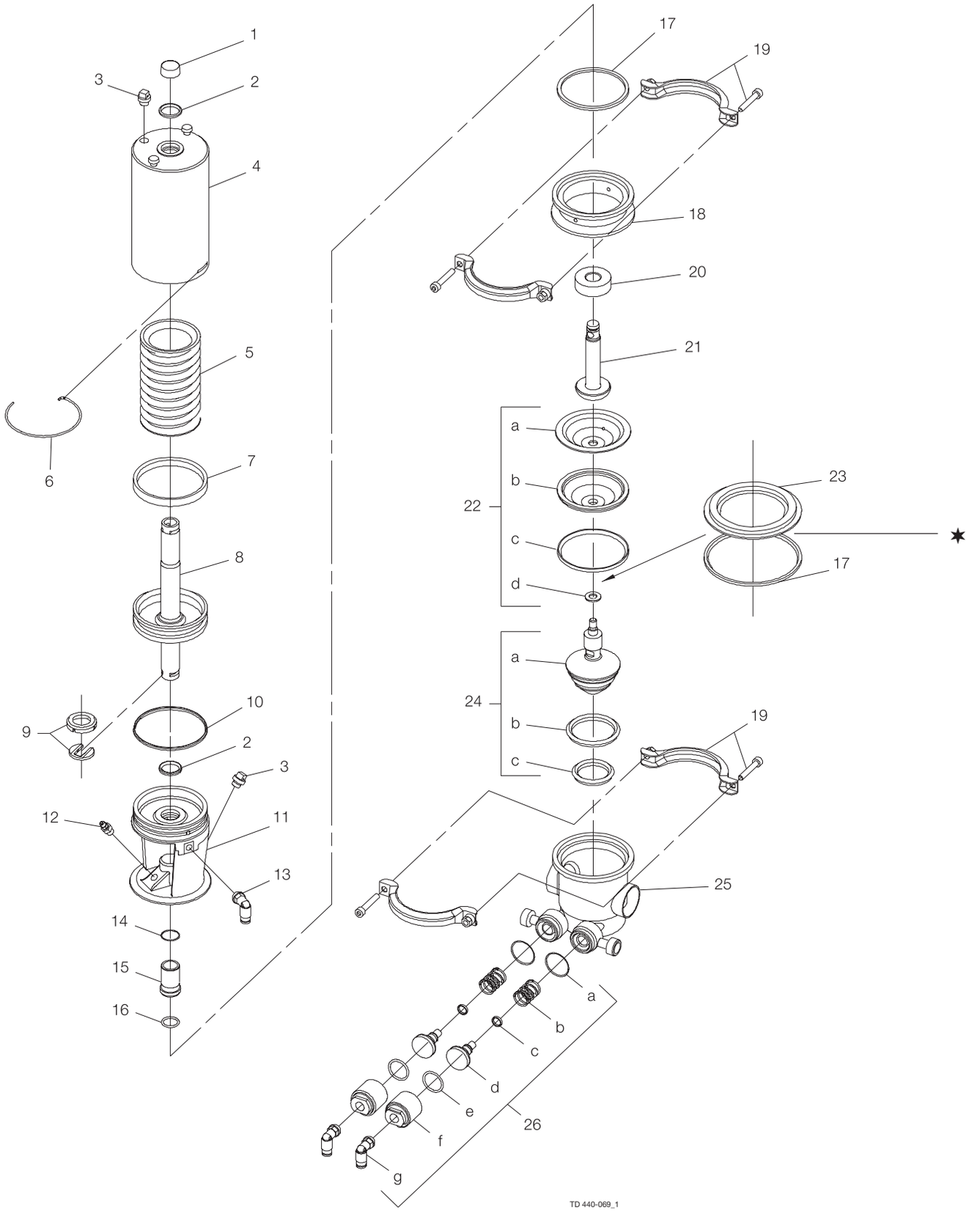

✶ Sizes 76-101.6 mm/DN80-100

Pos		Qty	Denomination	38mm DN40	51mm DN50	63.5mm DN65	76mm	DN80	101.6mm DN100
Actuator									
			Actuator complete	9612365202	9612365202	9612365402	9612365302	9612365302	9612365302
1		1	Cap	3180105256	3180105256	3180105255	3180105255	3180105255	3180105255
2	□	2	O-ring	22340625	22340625	22340649	22340649	22340649	22340649
3		2	Plug	9613414101	9613414101	9613414101	9613414101	9613414101	9613414101
4		1	Cylinder	3135301391	3135301391	3135301851	3135301851	3135301851	3135301851
5		1	Spring assembly, standard, black	3135306251	3135306251	3135306221	3135306221	3135306221	3135306221
		1	Spring assembly, strong, white	3135306252	3135306252	3135306222	3135306222	3135306222	3135306222
6	□	1	Lock wire	3135301511	3135301511	3135301891	3135301891	3135301891	3135301891
7	□	1	O-ring	22340174	22340174	22340175	22340175	22340175	22340175
8		1	Piston	3135306211	3135306211	3135306211	3135306191	3135306191	3135306191
9	□	1	Clip, complete	3135307931	3135307931	3135307932	3135307932	3135307932	3135307932
10	□	1	O-ring	9611990396	9611990396	22340617	22340617	22340617	22340617
11		1	Bonnet	9612359102	9612359102	9612365002	9612359202	9612359202	9612359202
12		1	Drain tube	3180114441	3180114441	3180114441	3180114441	3180114441	3180114441
13		1	Air fitting, swivel bend	9611991988	9611991988	9611991988	9611991988	9611991988	9611991988
14	□	1	O-ring bonnet	9611993176	9611993176	9611993176	9611993178	9611993178	9611993178
15	□	1	Guide ring	9612502201	9612502201	9612502202	9612502301	9612502301	9612502301
16	□	1	O-ring stem	9611992671	9611992671	9611992671	9611993177	9611993177	9611993177
Clamp									
19		2	Clamp and screws	3132000273	3132000273	3132000273	3132000275	3132000275	3132000275
Valve plug									
17	♦	1	Seal ring, EPDM, standard	3135301281	3135301281	3135301281			
		1	Seal ring, NBR	3135301282	3135301282	3135301282			
		1	Seal ring, FPM	3135301283	3135301283	3135301283			
		2	Seal ring, EPDM, standard			3135302051	3135302051	3135302051	
		2	Seal ring, NBR				3135302052	3135302052	3135302052
		2	Seal ring, FPM				3135302053	3135302053	3135302053
18		1	Intermediate piece	3135308131	3135308131	3135308131	3135308401	3135308401	3135308401
20		1	Washer	9612502701	9612502701	9612502701	9612502702	9612502702	9612502702
		1	Washer (period 9909-)	9612502703	9612502703	9612502703	9612502702	9612502702	9612502702
		1	Washer (period 9605-9909)	9612502701	9612502701	9612502701			
21		1	Stem upper	3135308091	3135308091	3135308091	3135308391	3135308391	3135308391
22	♦	1	Diaphragm set, EPDM	9611920365	9611920365	9611920365	9611920368	9611920368	9611920368
		1	Diaphragm set, NBR						
		1	Diaphragm set, FPM						
22a		1	Diaphragm support, EPDM.	3135308161	3135308161	3135308161	3135308162	3135308162	3135308162
22b		1	Diaphragm, PTFE	3135308201	3135308201	3135308201	3135308202	3135308202	3135308202
22c		1	L-seal, EPDM, standard	3135308171	3135308171	3135308171	3135308171	3135308171	3135308171
		1	L-seal, NBR	3135308172	3135308172	3135308172	3135308172	3135308172	3135308172
		1	L-seal, FPM	3135308173	3135308173	3135308173	3135308173	3135308173	3135308173
22d		1	Stem seal, EPDM, standard	9612502401	9612502401	9612502401	9612502402	9612502402	9612502402
		1	Stem seal, NBR	9612502403	9612502403	9612502403	9612502404	9612502404	9612502404
		1	Stem seal, FPM	9612502405	9612502405	9612502405	9612502406	9612502406	9612502406
23		1	Diaphragm ring				3135308411	3135308411	3135308411
Valve plug									
24		1	Plug complete, EPDM standard	9612501913	9612501914	9612501915		9612501917	9612501918
		1	Plug complete, NBR	9612501901	9612501902	9612501903	9612501904	9612501905	9612501906
		1	Plug complete, FPM	9612501907	9612501908	9612501909	9612501910	9612501911	9612501912
24a		1	Plug	9612501701	9612501702	9612501703	9612501704	9612501705	9612501706
24b	♦	1	Seal ring, EPDM, standard	9612358415	9612358415	9612358418	9612358421	9612358421	9612358424
		1	Seal ring, NBR	9612358413	9612358413	9612358416	9612358419	9612358419	9612358422
		1	Seal ring, FPM	9612358414	9612358414	9612358417	9612358420	9612358420	9612358423
24c	♦	1	Seal ring, EPDM, standard	9612358403	9612358403	9612358406	9612358409	9612358409	9612358412
		1	Seal ring, NBR	9612358401	9612358401	9612358404	9612358407	9612358407	9612358410
		1	Seal ring, FPM	9612358402	9612358402	9612358405	9612358408	9612358408	9612358411

1.6

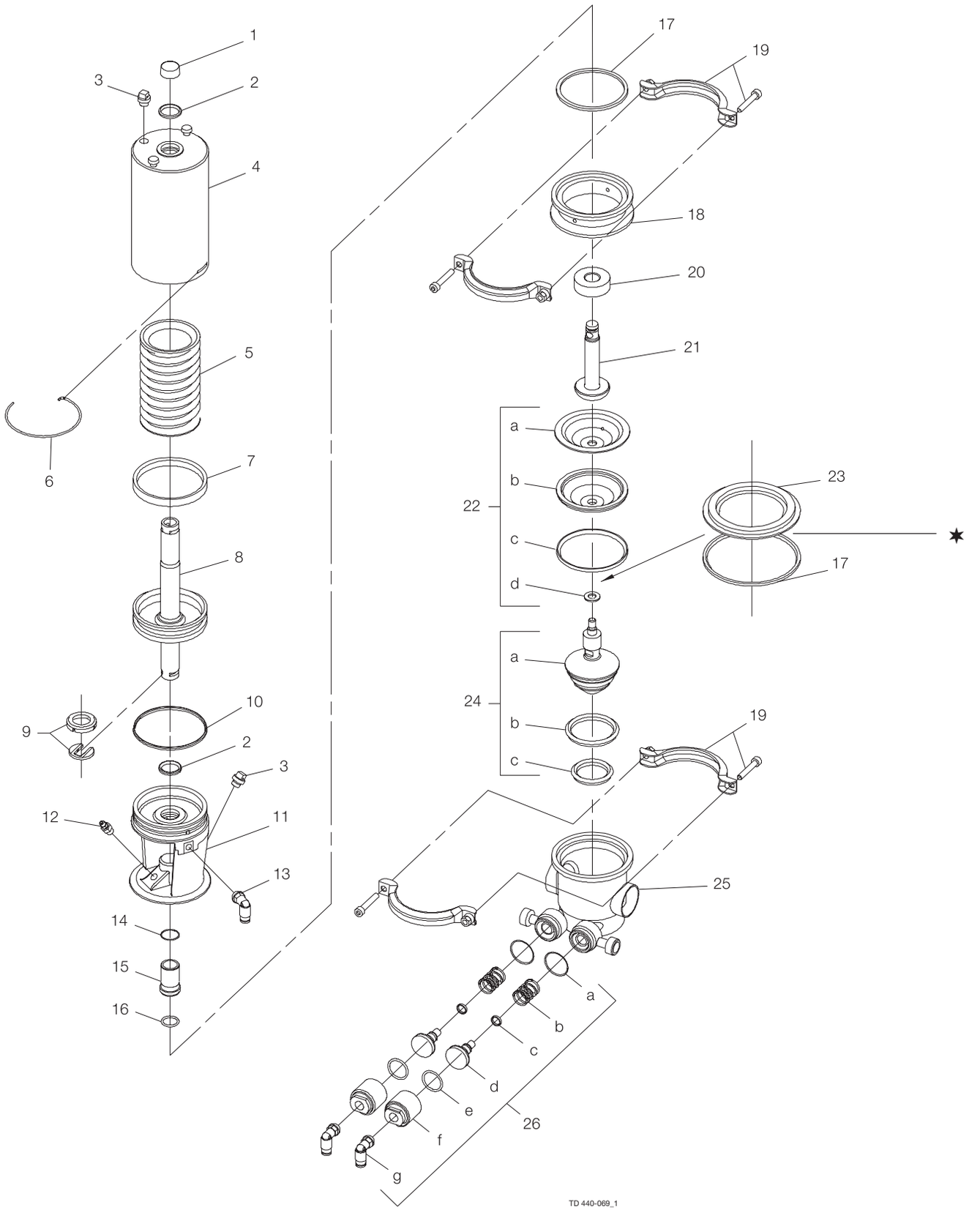

✶ Sizes
76-101.6 mm/
DN 80-100

Pos	Qty	Denomination	38mm DN40	51mm DN50	63.5mm DN65	76mm	DN80	101.6mm DN100
Valve body								
25	1	Valve body, 2 ports ISO	9612357301	9612357401	9612357501	9612357601		9612357701
	1	Valve body, 2 ports DIN	9612357313	9612357413	9612357513		9612357613	9612357713
	1	Valve body, 3 ports ISO	9612357302	9612357402	9612357502	9612357602		9612357702
	1	Valve body, 3 ports DIN	9612357314	9612357414	9612357514		9612357614	9612357714
Detecting/CIP valve								
26a ♦○	2	O-ring, NBR	9611990096	9611990096	9611990096	9611990096	9611990096	9611990096
26b ○	2	Spring	9612338001	9612338001	9612338001	9612338001	9612338001	9612338001
26c ♦○	2	O-ring, EPDM	9611993017	9611993017	9611993017	9611993017	9611993017	9611993017
	2	O-ring, NBR	9611993016	9611993016	9611993016	9611993016	9611993016	9611993016
	2	O-ring, FPM	9611993018	9611993018	9611993018	9611993018	9611993018	9611993018
26d ○	2	Spindle	9612441501	9612441501	9612441501	9612441501	9612441501	9612441501
26e ♦○	2	O-ring, HNBR	9611993413	9611993413	9611993413	9611993413	9611993413	9611993413
26f ○	2	Plug	9612441601	9612441601	9612441601	9612441601	9612441601	9612441601
26g	2	Air fitting, swivel bend	9611994558	9611994558	9611994558	9611994558	9611994558	9611994558
Detecting/CIP valve complete								
26 ○		Internal parts, EPDM	9611920354	9611920354	9611920354	9611920354	9611920354	9611920354
		Internal parts, NBR	9611920270	9611920270	9611920270	9611920270	9611920270	9611920270
		Internal parts, FPM	9611920271	9611920271	9611920271	9611920271	9611920271	9611920271

Surface roughness, product wetted parts: Ra ≤ 0.8 µm

Pos	Qty	Denomination	38mm DN40	51mm DN50	63.5mm DN65	76mm	DN80	101.6mm DN100
Valve plug								
24	1	Plug complete, EPDM, standard	9612501931	9612501932	9612501933	9612501934	9612501935	9612501936
	1	Plug complete, NBR	9612501919	9612501920	9612501921	9612501922	9612501923	9612501924
	1	Plug complete, FPM	9612501925	9612501926	9612501927	9612501928	9612501929	9612501930
24a	1	Plug	9612501707	9612501708	9612501709	9612501710	9612501711	9612501712
Valve body								
25	1	Valve body, 2 ports, ISO	9612357317	9612357417	9612357517	9612357617		9612357717
	1	Valve body, 2 ports, DIN	9612357319	9612357419	9612357519		9612357619	9612357718
	1	Valve body, 3 ports, ISO	9612357318	9612357418	9612357518	9612357618		9612357719
	1	Valve body, 3 ports, DIN	9612357320	9612357420	9612357520		9612357620	9612357720

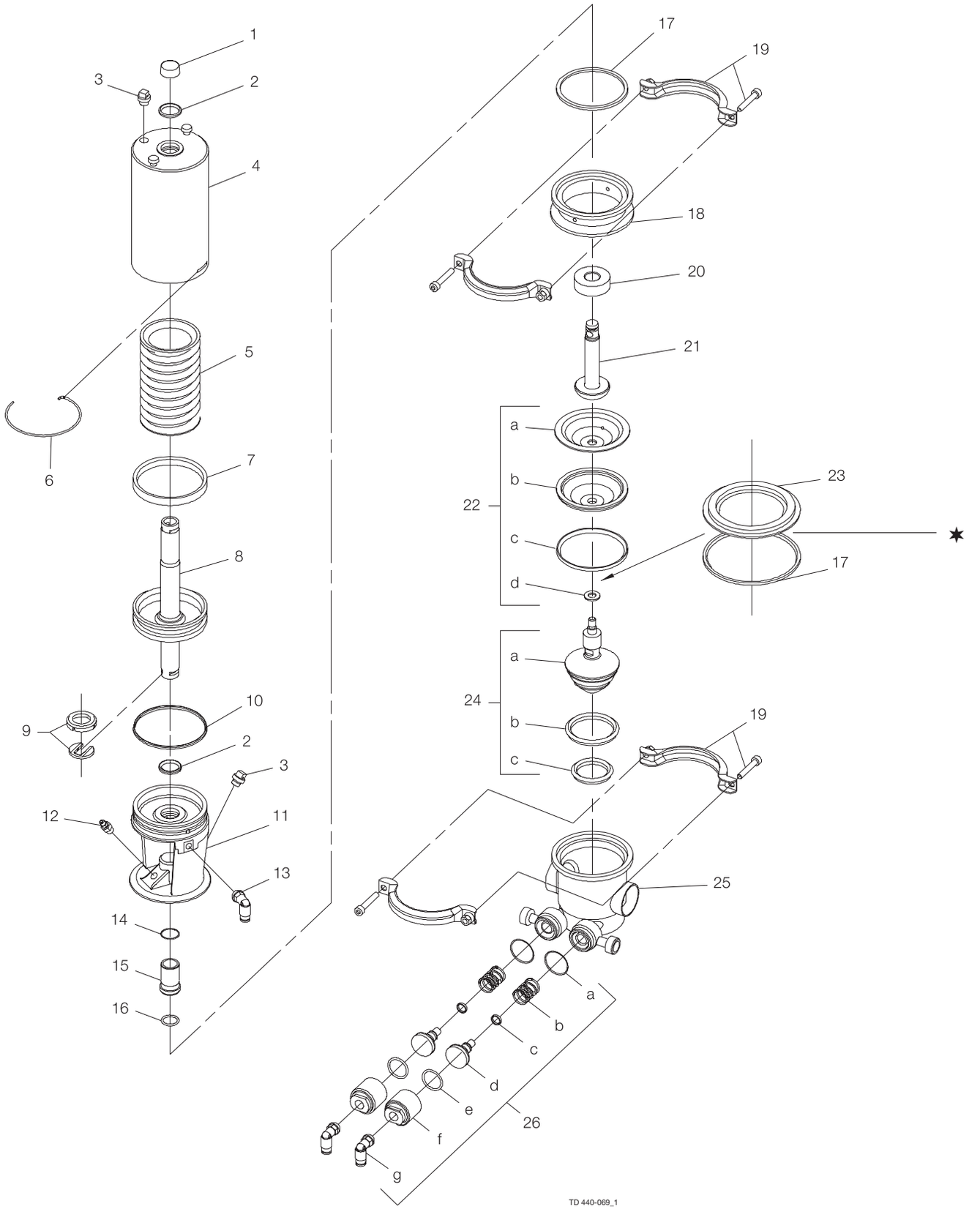

✶ Sizes
76-101.6 mm/
DN 80-100

		38 mm DN40	51 mm DN50	63.5 mm DN65	76.1 mm DN80	101.6 mm DN100
Service Kit for Actuator						
□	Service Kit	9611920362	9611920362	9611920363	9611920364	9611920364
Service Kit for Product wetted parts						
♦	Service kit, EPDM	9611920371	9611920371	9611920373	9611920374	9611920375
♦	Service kit, NBR	9611920376	9611920376	9611920378	9611920379	9611920380
♦	Service kit, FPM	9611920381	9611920381	9611920383	9611920384	9611920385
Service Kit for Detecting/CIP valve complete						
○	Service kit, EPDM	9611920354	9611920354	9611920354	9611920354	9611920354
○	Service kit, NBR	9611920270	9611920270	9611920270	9611920270	9611920270
○	Service kit, FPM	9611920271	9611920271	9611920271	9611920271	9611920271

Parts marked with □♦○ are included in the service kits.
Recommended Spare Parts: Service Kits.

900-107/4

1.6

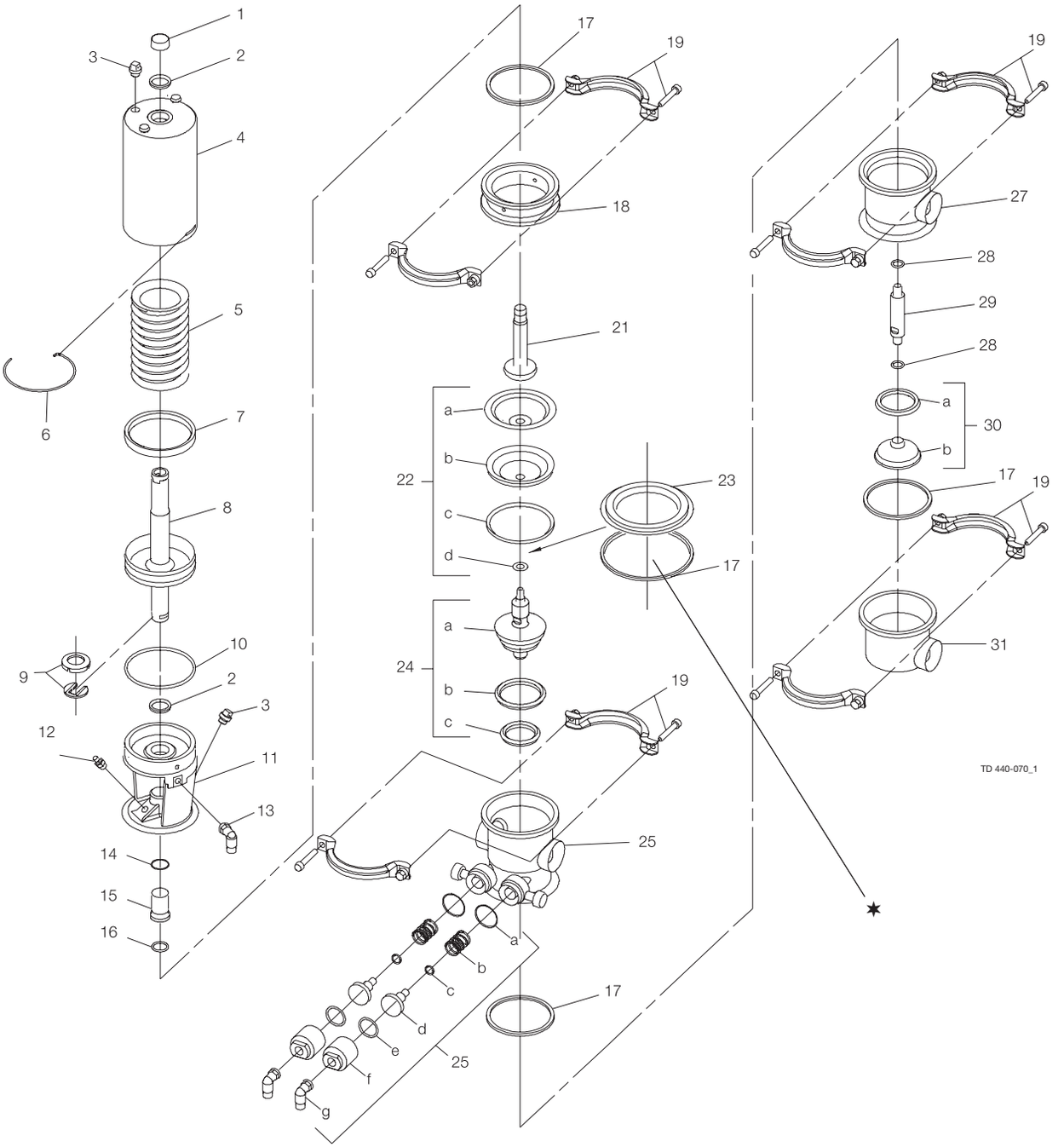

✶ Sizes 76-101.6 mm/DN 80-100

Pos		Qty	Denomination	38mm DN40	51mm DN50	63.5mm DN65	76mm	DN80	101.6mm DN100
Actuator									
			Actuator complete	9612365202	9612365202	9612365402	9612365302	9612365302	9612365302
1		1	Cap	3180105256	3180105256	3180105255	3180105255	3180105255	3180105255
2	□	2	O-ring	22340625	22340625	22340649	22340649	22340649	22340649
3		2	Plug	9613414101	9613414101	9613414101	9613414101	9613414101	9613414101
4		1	Cylinder	3135301391	3135301391	3135301851	3135301851	3135301851	3135301851
5		1	Spring assembly, standard, black	3135306251	3135306251	3135306221	3135306221	3135306221	3135306221
		1	Spring assembly, strong, white	3135306252	3135306252	3135306222	3135306222	3135306222	3135306222
6	□	1	Lock wire	3135301511	3135301511	3135301891	3135301891	3135301891	3135301891
7	□	1	O-ring	22340174	22340174	22340175	22340175	22340175	22340175
8		1	Piston	3135306211	3135306211	3135306211	3135306191	3135306191	3135306191
9	□	1	Clip, complete	3135307931	3135307931	3135307932	3135307932	3135307932	3135307932
10	□	1	O-ring	9611990396	9611990396	22340617	22340617	22340617	22340617
11		1	Bonnet	9612359102	9612359102	9612365002	9612359202	9612359202	9612359202
12		1	Drain tube	3180114441	3180114441	3180114441	3180114441	3180114441	3180114441
13		1	Air fitting, swivel bend	9611991988	9611991988	9611991988	9611991988	9611991988	9611991988
14	□	1	O-ring bonnet	9611993176	9611993176	9611993176	9611993178	9611993178	9611993178
15	□	1	Guide ring	9612502201	9612502201	9612502202	9612502301	9612502301	9612502301
16	□	1	O-ring stem	9611992671	9611992671	9611992671	9611993177	9611993177	9611993177
Clamp									
19		4	Clamp and screws	3132000273	3132000273	3132000273	3132000275	3132000275	3132000275
Valve plug									
17	◆	3	Seal ring, EPDM, standard	3135301281	3135301281	3135301281			
		3	Seal ring, NBR	3135301282	3135301282	3135301282			
		3	Seal ring, FPM	3135301283	3135301283	3135301283			
		4	Seal ring, EPDM, standard				3135302051	3135302051	3135302051
		4	Seal ring, NBR				3135302052	3135302052	3135302052
		4	Seal ring, FPM				3135302053	3135302053	3135302053
18		1	Intermediate piece	3135308131	3135308131	3135308131	3135308401	3135308401	3135308401
21		1	Stem upper	3135308091	3135308091	3135308091	3135308391	3135308391	3135308391
22	◆	1	Diaphragm set, EPDM	9611920365	9611920365	9611920365	9611920368	9611920368	9611920368
		1	Diaphragm set, NBR						
		1	Diaphragm set, FPM						9611920370
22a		1	Diaphragm support, EPDM	3135308161	3135308161	3135308161	3135308162	3135308162	3135308162
22b		1	Diaphragm, PTFE	3135308201	3135308201	3135308201	3135308202	3135308202	3135308202
22c		1	L-seal, EPDM, standard	3135308171	3135308171	3135308171	3135308171	3135308171	3135308171
		1	L-seal, NBR	3135308172	3135308172	3135308172	3135308172	3135308172	3135308172
		1	L-seal, FPM	3135308173	3135308173	3135308173	3135308173	3135308173	3135308173
22d		1	Stem seal, EPDM, standard	9612502401	9612502401	9612502401	9612502402	9612502402	9612502402
		1	Stem seal, NBR	9612502403	9612502403	9612502403	9612502404	9612502404	9612502404
		1	Stem seal, FPM	9612502405	9612502405	9612502405	9612502406	9612502406	9612502406
23		1	Diaphragm ring				3135308411	3135308411	3135308411
Valve plug upper									
24		1	Plug upper complete, EPDM Standard		9612501814	9612501815	9612501816	9612501817	9612501818
		1	Plug upper complete, NBR			9612501803	9612501804	9612501805	9612501806
		1	Plug upper complete, FPM	9612501807	9612501808	9612501809	9612501810	9612501811	9612501812
24a		1	Plug upper		9612501602	9612501603	9612501604	9612501605	
24b	◆	1	Seal ring, EPDM, standard	9612358415	9612358415	9612358418	9612358421	9612358421	9612358424
		1	Seal ring, NBR	9612358413	9612358413	9612358416	9612358419	9612358419	9612358422
		1	Seal ring, FPM	9612358414	9612358414	9612358417	9612358420	9612358420	9612358423
24c	◆	1	Seal ring, EPDM, standard	9612358403	9612358403	9612358406	9612358409	9612358409	9612358412
		1	Seal ring, NBR	9612358401	9612358401	9612358404	9612358407	9612358407	9612358410
		1	Seal ring, FPM	9612358402	9612358402	9612358405	9612358408	9612358408	9612358411
28	◆	2	O-ring, EPDM standard	9611992694	9611992694	9611992694	9611992697	9611992697	9611992697
		2	O-ring, NBR	9611992695	9611992695	9611992695	9611992698	9611992698	9611992698
		2	O-ring, FPM	9611992696	9611992696	9611992696	9611992699	9611992699	9611992699
29		1	Stem lower		9612502102	9612502103	9612502104		9612502106

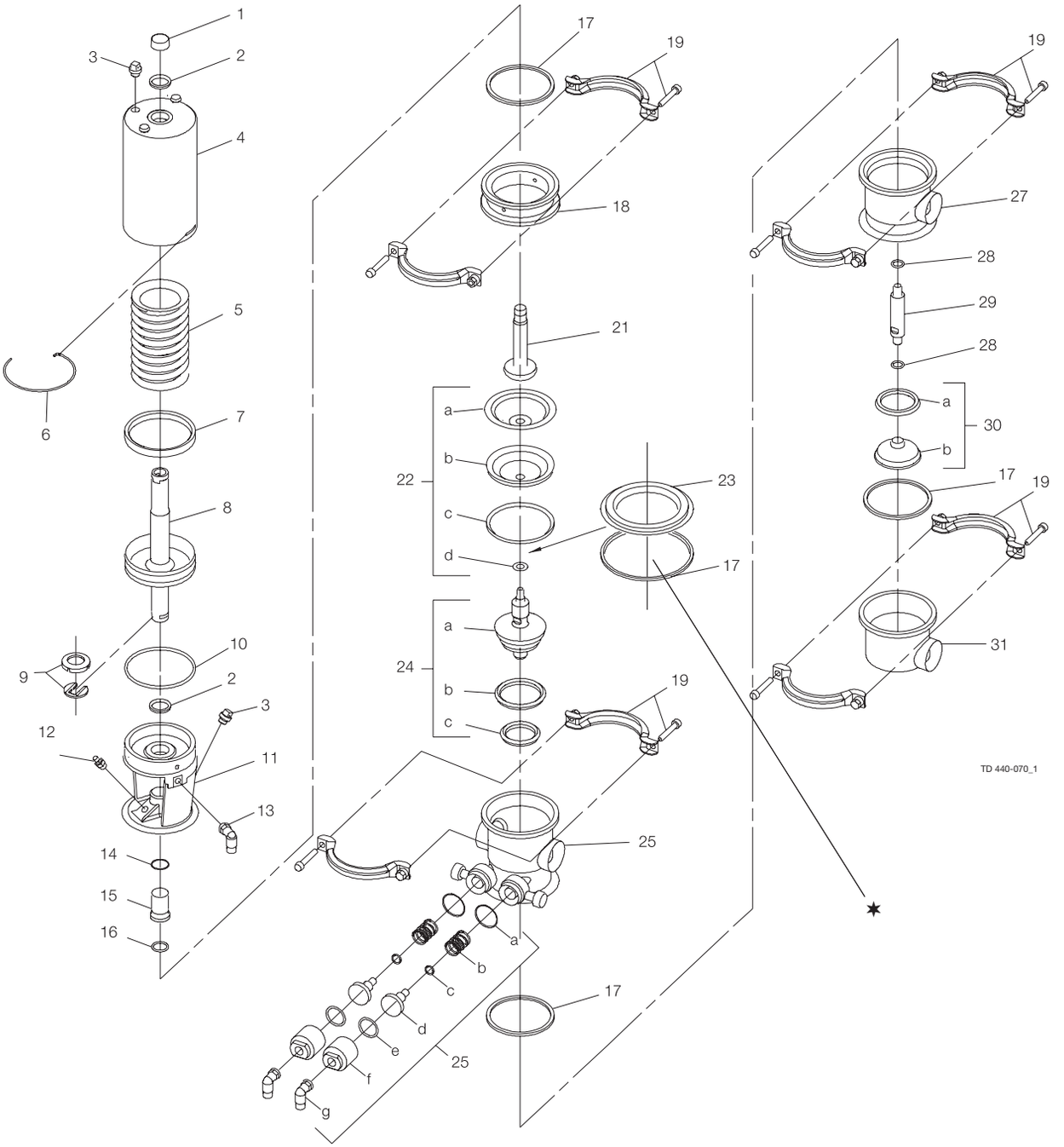

✶ Sizes 76-101.6 mm/ DN 80-100

Pos	Qty	Denomination	38mm DN40	51mm DN50	63.5mm DN65	76mm	DN80	101.6mm DN100
Valve plug lower								
30	1	Plug lower complete, EPDM, standard	9612359509	9612359509	9612359510	9612359511	9612359511	9612359512
	1	Plug lower complete, NBR			9612359502		9612359503	9612359504
	1	Plug lower complete, FPM	9612359505	9612359505	9612359506			9612359508
30a ♦	1	Seal ring, EPDM	9612358427	9612358427	9612358430	9612358433	9612358433	9612358436
	1	Seal ring, NBR	9612358425	9612358425	9612358428	9612358431	9612358431	9612358434
	1	Seal ring, FPM	9612358426	9612358426	9612358429	9612358432	9612358432	9612358435
30b	1	Plug lower	9612346101	9612346101	9612346201	9612346301	9612346301	9612346401
Valve body								
25	1	Valve body, upper, 1 port ISO	9612356201	9612356301	9612356401	9612356501		9612356601
	1	Valve body, upper, 1 port DIN	9612356213	9612356313	9612356413		9612356513	9612356613
	1	Valve body, upper, 2 ports ISO	9612356202	9612356302	9612356402	9612356502		9612356602
	1	Valve body, upper, 2 ports DIN	9612356214	9612356314	9612356414		9612356514	9612356614
27	1	Valve body, middle, 1 port ISO	9612351001	9612351101	9612351201	9612351301		9612351401
	1	Valve body, middle, 1 port DIN	9612352501	9612352601	9612352702		9612352801	9612352901
	1	Valve body, middle, 2 ports ISO						
	1	Valve body, middle, 2 ports DIN	9612352502	9612352602	9612352703			9612352902
31	1	Valve body, lower, 1 port ISO	3135305821	3135305831	3135305841	3135305851		3135305861
	1	Valve body, lower, 1 port DIN	9612322101	9612322201	9612322301		9612322401	9612322501
	1	Valve body, lower, 2 ports ISO	3135305822	3135305832	3135305842	3135305852		3135305862
	1	Valve body, lower, 2 ports DIN	9612322102	9612322202	9612322302		9612322402	9612322502
Detecting/CIP valve								
26a ♦○	2	O-ring, NBR	9611990096	9611990096	9611990096	9611990096	9611990096	9611990096
26b ○	2	Spring	9612338001	9612338001	9612338001	9612338001	9612338001	9612338001
26c ♦○	2	O-ring, EPDM	9611993017	9611993017	9611993017	9611993017	9611993017	9611993017
♦○	2	O-ring, NBR	9611993016	9611993016	9611993016	9611993016	9611993016	9611993016
♦○	2	O-ring, FPM	9611993018	9611993018	9611993018	9611993018	9611993018	9611993018
26d ○	2	Spindle	9612441501	9612441501	9612441501	9612441501	9612441501	9612441501
26e ♦○	2	O-ring HNBR	9611993413	9611993413	9611993413	9611993413	9611993413	9611993413
26f ○	2	Plug	9612441601	9612441601	9612441601	9612441601	9612441601	9612441601
26g	2	Air fitting, swivel bend	9611994558	9611994558	9611994558	9611994558	9611994558	9611994558
Detecting /CIP valve complete								
26 ○	1	Internal parts, EPDM	9611920354	9611920354	9611920354	9611920354	9611920354	9611920354
	1	Internal parts, NBR	9611920270	9611920270	9611920270	9611920270	9611920270	9611920270
	1	Internal parts, FPM	9611920271	9611920271	9611920271	9611920271	9611920271	9611920271

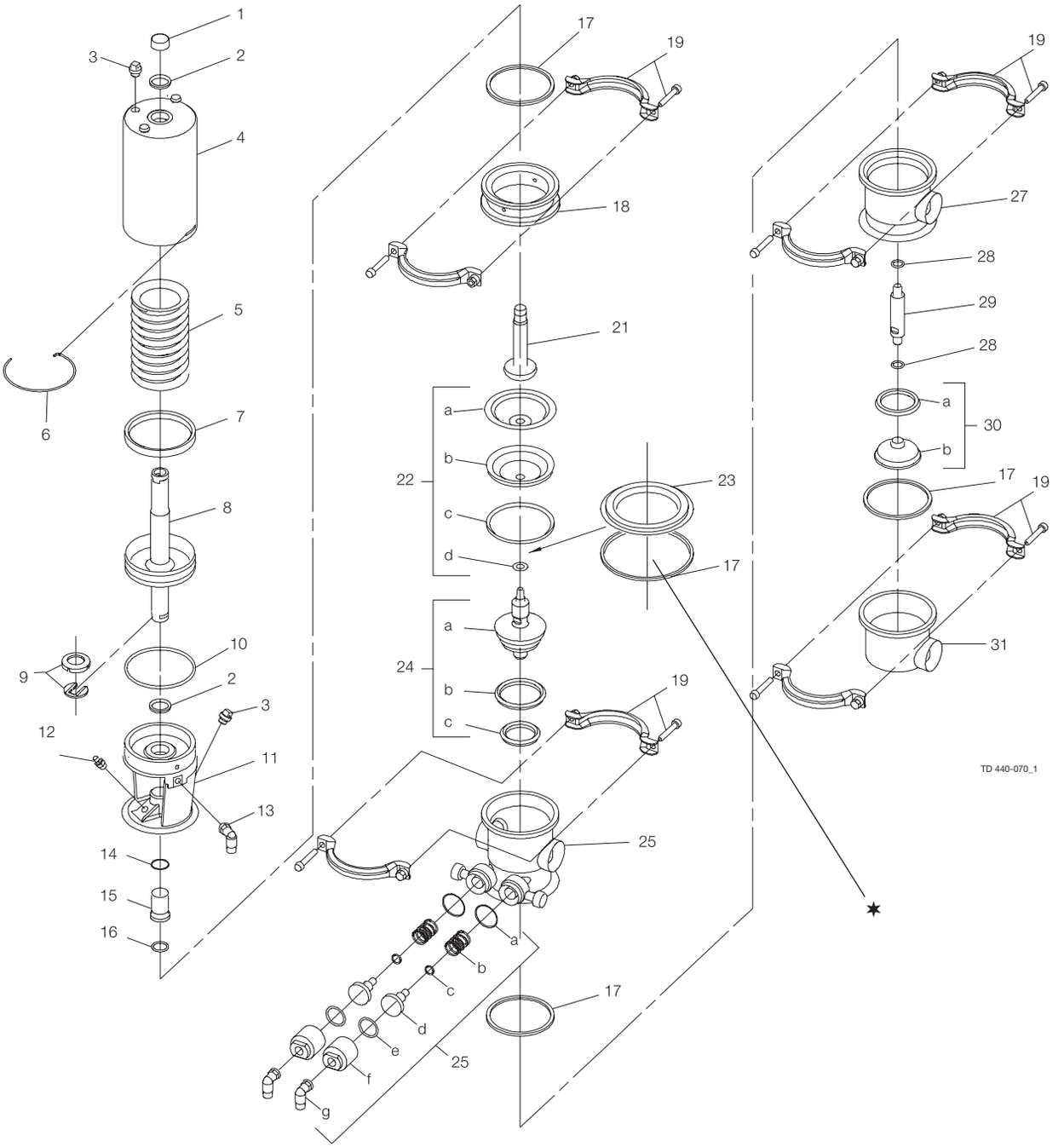

✶ Sizes 76-101.6 mm/ DN80-100

Surface roughness, product wetted parts: Ra ≤ 0.8 µm

Pos	Qty	Denomination	38 mm NW 40	51 mm NW50	63.5 mm NW65	76 mm	NW80	101.6 mm NW100
Valve plug								
24	1	Plug complete, EPDM, Standard	9612501831	9612501832	9612501833	9612501834	9612501835	9612501836
	1	Plug complete, NBR	9612501819	9612501820	9612501821	9612501822	9612501823	9612501824
	1	Plug complete, FPM	9612501825	9612501825	9612501825	9612501825	9612501825	9612501825
24a	1	Plug upper	9612501607	9612501608	9612501609	9612501610	9612501611	9612501612
29	1	Stem lower	9612502107	9612502108	9612502109	9612502110	9612502111	9612502112
Valve plug lower								
30	1	Plug lower complete, EPDM, standard	9612359521	9612359521	9612359522	9612359523	9612359523	9612359524
	1	Plug lower complete, NBR	9612359513	9612359513	9612359514	9612359515	9612359515	9612359516
	1	Plug lower complete, FPM	9612359517	9612359517	9612359518	9612359519	9612359519	9612359520
30b	1	Plug lower	9612346102	9612346102	9612346202	9612346302	9612346302	9612346402
Valve body								
25	1	Valve body upper, 1 port, ISO	9612356217	9612356317	9612356417	9612356517		9612356617
	1	Valve body upper, 1 port, DIN	9612356219	9612356319	9612356419		9612356518	9612356619
	1	Valve body upper, 2 ports, ISO	9612356218	9612356318	9612356418	9612356518		9612356618
	1	Valve body upper, 2 ports, DIN	9612356220	9612356232	9612356420		9612356520	9612356262
27	1	Valve body middle, 1 port, ISO	9612351007	9612351007	9612351207	9612351307		9612351407
	1	Valve body middle, 1 port, DIN	9612352503	9612352603	9612352703		9612352803	9612352903
	1	Valve body middle, 2 ports, ISO	9612351008	9612351108	9612351208	9612351308		9612351408
	1	Valve body middle, 2 ports, DIN	9612352504	9612352604	9612352704		9612352804	9612352904
31	1	Valve body lower, 1 port, ISO	3135305827	3135305837	3135305847	3135305857		3135305867
	1	Valve body lower, 1 port, DIN	9612322103	9612322203	9612322303		9612322403	9612322503
	1	Valve body lower, 2 ports, ISO	3135305828	3135305838	3135305848	3135305858		3135305868
	1	Valve body lower, 2 ports, DIN	9612322104	9612322204	9612322304		9612322404	9612322504

		38 mm DN40	51 mm DN50	63.5 mm DN65	76 mm DN80	101.6 mm DN100
Service Kit for Actuator						
□	Service Kit	9611920362	9611920362	9611920363	9611920364	9611920364
Service Kit for Product wetted parts						
♦	Service kit, EPDM	9611920386	9611920386	9611920387	9611920388	9611920389
♦	Service kit, NBR	9611920390	9611920390	9611920391	9611920392	9611920393
♦	Service kit, FPM	9611920394	9611920394	9611920395	9611920396	9611920397

Parts marked with □♦○ are included in the service kits.
Recommended Spare Parts: Service Kits.

900-108/5

1.6

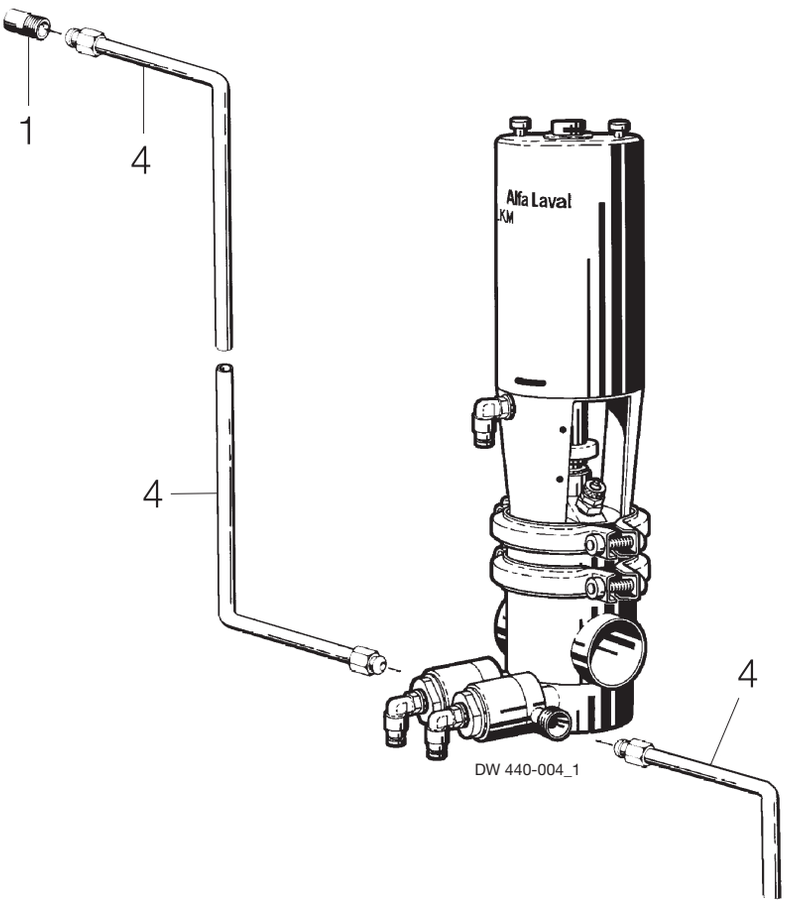

Pos	Qty	Denomination	
1	1	Welding male part	3135707471
4	3	Leakage tube	3135710013

900-110/1

1.6

Tool for shut-off valve and change-over valve (upper plug)

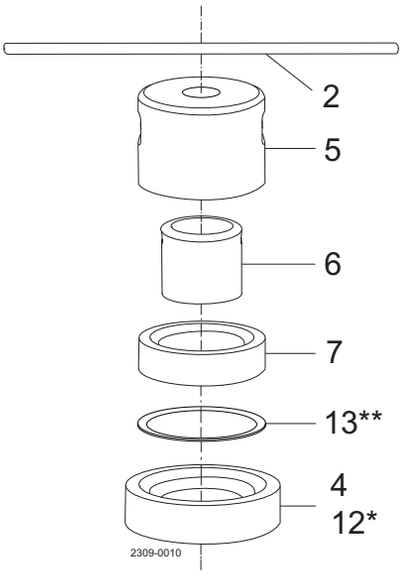

Small seal ring

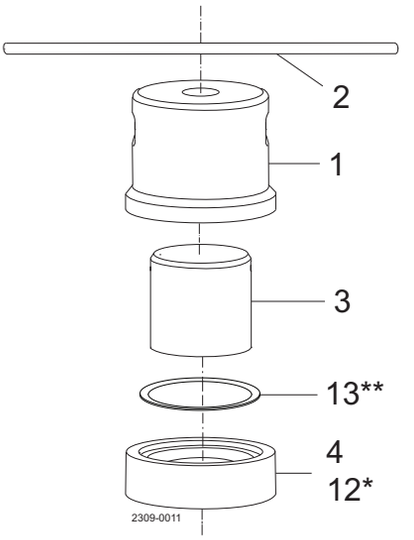

Large seal ring

* = Only for 38-51 mm/DN40-50 upper change-over plug (marking C8)
** = Only for DN125/150

Tool for change-over valve (lower plug).

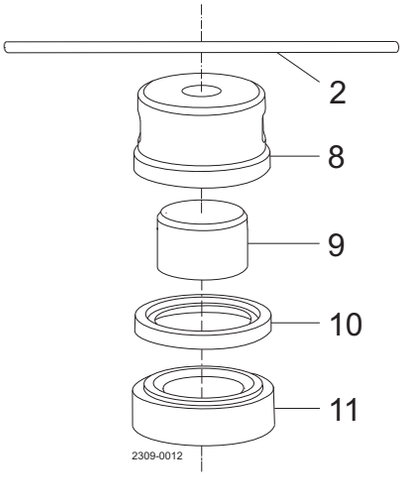

Lower valve plug

Tool for shut-off valve and change-over valve (upper plug)

Pos	Qty	Denomination	9612994801 DN40/DN 50 38 mm/51 mm	9612994901 DN65 63.5 mm	9612995001 DN80 76.1 mm	9612995101 DN100 101.6 mm	9612995201 DN125/DN150
1	1	Outer guide ring for large seal	**	**	**	**	**
2	1	Pin for tool	**	**	**	**	**
3	1	Inner guide ring for large seal	**	**	**	**	**
4	1	Tool housing, upper plug	**	**	**	**	**
5	1	Outer guide ring for small seal	**	**	**	**	**
6	1	Inner guide ring for small seal	**	**	**	**	**
7	1	Support part, upper plug	**	**	**	**	**
12	1	Tool housing, ch/o upper plug	**				
13	1	Spacer (DN125/150)					**

Tool for change-over valve (lower plug)

Pos	Qty	Denomination	9612994802 DN40/DN50 38 mm/51 mm	9612994902 DN65 63.5 mm	9612995002 DN80 76.1 mm	9612995102 DN100 101.6 mm
8	1	Outer guide ring, lower plug	**	**	**	**
9	1	Inner guide ring, lower plug	**	**	**	**
10	1	Support part, lower plug	**	**	**	**
11	1	Tool housing, lower plug	**	**	**	**

** Not available as spare part

Marking of tool
shut-off valve and change-over valve (upper plug)

Pos	Qty	Denomination	DN40/DN50 38 mm/51 mm	DN65 63.5 mm	DN80 76.1 mm	DN100 101.6 mm	DN125 DN150
1		Outer guide ring for large seal	C 1/8	E 1/7	G 1/7	I 1/7	K 1/7
2		Pin for tool	C7	E7	G7	I7	K7
3		Inner guide ring for large seal	C5	E5	G5	I5	K5
4		Tool housing, upper plug	C3	E3	G3	I3	K3
5		Outer guide ring for small seal	C2	E2	G2	I2	K2
6		Inner guide ring for small seal	C6	E6	G6	I6	K6
7		Support part, upper plug	C4	E4	G4	I4	K4
12		Tool housing, ch/o upper plug	C8				
13		Spacer (DN125/150)					

Change-over valve (lower plug)

Pos	Qty	Denomination	DN40/DN50 38 mm/51 mm	DN65 63.5 mm	DN80 76.1 mm	DN100 101.6 mm
8		Outer guide ring, lower plug	D 1/4	F 1/4	H 1/4	J 1/4
9		Inner guide ring, lower plug	D4	F4	H4	J4
10		Support part, lower plug	D3	F3	H3	J3
11		Tool housing, lower plug	D2	F2	H2	J2

TD 900-527

1.6

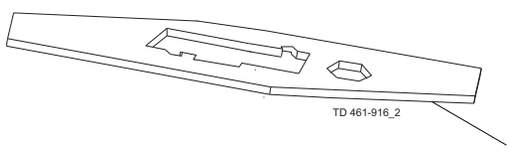

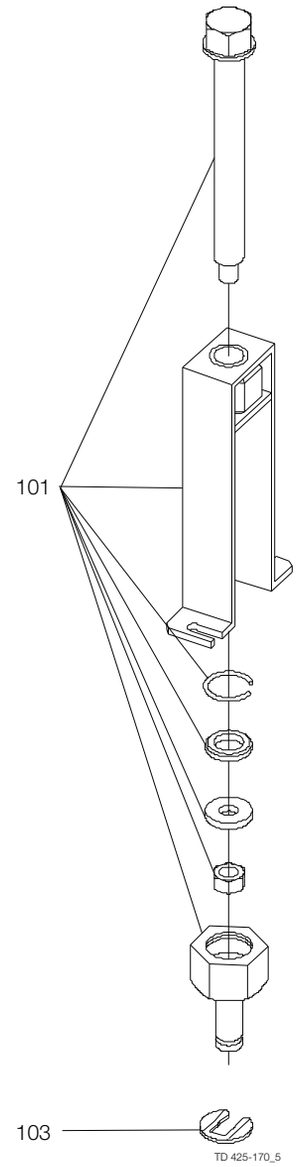

Pos	Qty	Denomination	DN40-DN100 38-101.6 mm	DN125-DN150
Service tool				
101	1	Service tool, complete	3135308001	
102	1	Turning tool	3135302191	9612454001
103	1	Clip	3135307291	3135307301

900704

Tool for shut-off valve and change-over valve (upper plug)

1.6

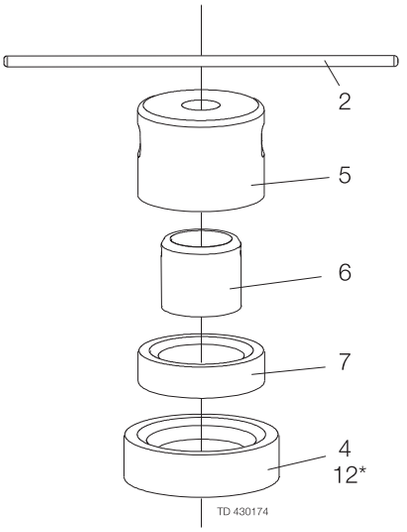

Small seal ring

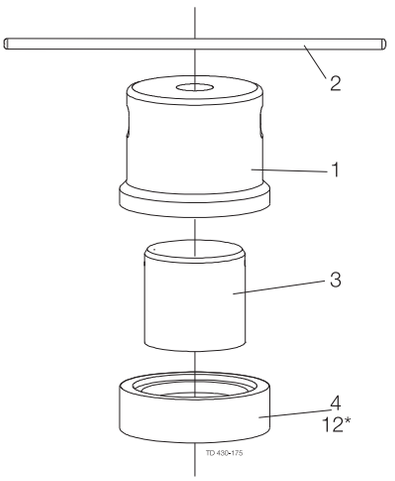

Large seal ring

* Only for 38-51 mm/DN40-50 upper change-over plug (markingC8)

Tool for change-over valve (lower plug)

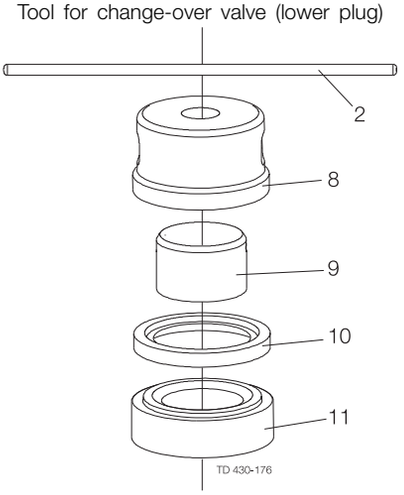

Lower valve plug

Tool for shut-off valve and change-over valve (upper plug)

Pos	Qty	Denomination	9612994801 DN 40/DN 50 38 mm/51 mm	9612994901 DN65 63.5 mm	9612995001 DN80 76.1 mm	9612995101 DN100 101.6 mm
1	1	Outer guide ring for large seal	**	**	**	**
2	1	Pin for tool	**	**	**	**
3	1	Inner guide ring for large seal	**	**	**	**
4	1	Tool housing, upper plug	**	**	**	**
5	1	Outer guide ring for small seal	**	**	**	**
6	1	Inner guide ring for small seal	**	**	**	**
7	1	Support part, upper plug	**	**	**	**
12	1	Tool housing, ch/o upper plug	**			

Tool for change-over valve (lower plug)

Pos	Qty	Denomination	9612994802 DN 40/DN 50 38 mm/51 mm	9612994902 DN65 63.5 mm	9612995002 DN80 76.1 mm	9612995102 DN100 101.6 mm
8	1	Outer guide ring, lower plug	**	**	**	**
9	1	Inner guide ring, lower plug	**	**	**	**
10	1	Support part, lower plug	**	**	**	**
11	1	Tool housing, lower plug	**	**	**	**

** Not available as spare part

Marking of tool
Tool for shut-off valve and change-over valve (upper plug)

Pos	Qty	Denomination	DN 40 / DN 50 38 mm / 51 mm	DN 65 63.5 mm	DN 80 76.1 mm	DN 100 101.6 mm
1		Outer guide ring for large seal	C 1/8	E 1/7	G 1/7	I 1/7
2		Pin for tool	C7	E7	G7	I7
3		Inner guide ring for large seal	C5	E5	G5	I5
4		Tool housing, upper plug	C3	E3	G3	I3
5		Outer guide ring for small seal	C2	E2	G2	I2
6		Inner guide ring for small seal	C6	E6	G6	I6
7		Support part, upper plug	C4	E4	G4	I4
12		Tool housing, ch/o upper plug	C8			

Change-over valve (lower plug)

Pos	Qty	Denomination	DN40/DN50 38 mm/51 mm	DN65 63.5 mm	DN80 76.1 mm	DN100 101.6 mm
8		Outer guide ring, lower plug	D 1/4	F 1/4	H 1/4	J 1/4
9		Inner guide ring, lower plug	D4	F4	H4	J4
10		Support part, lower plug	D3	F3	H3	J3
11		Tool housing, lower plug	D2	F2	H2	J2

TD 900-528

1.6

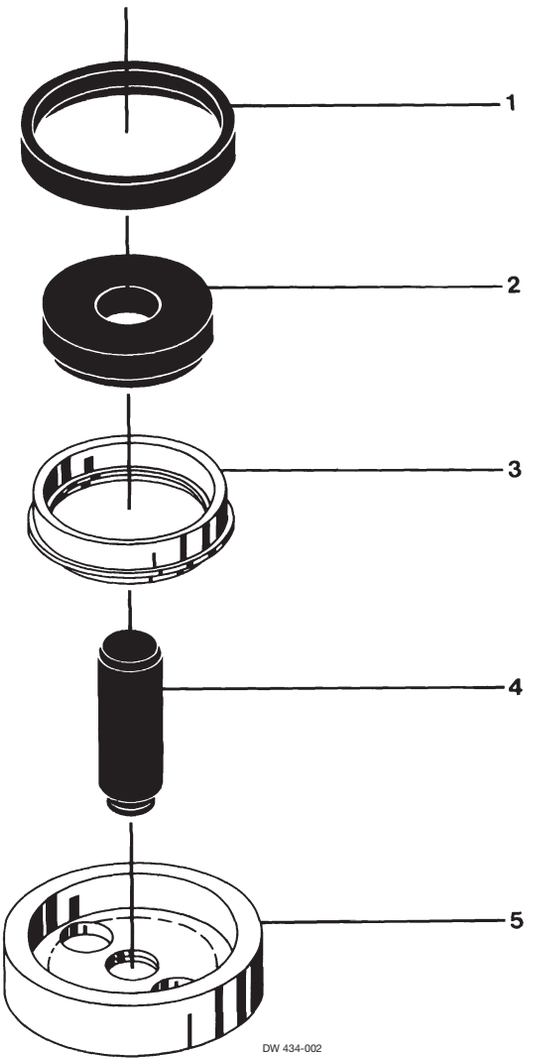

Pos	Qty	Denomination	9612453801
1	1	Outer guide ring	9612453401
2	1	Inner guide ring	9612453201
3	1	Piston ring	9612453301
4	1	Spindle	9612453101
5	1	Tool housing	9612453701

900418

Not manufactured anymore

1.6

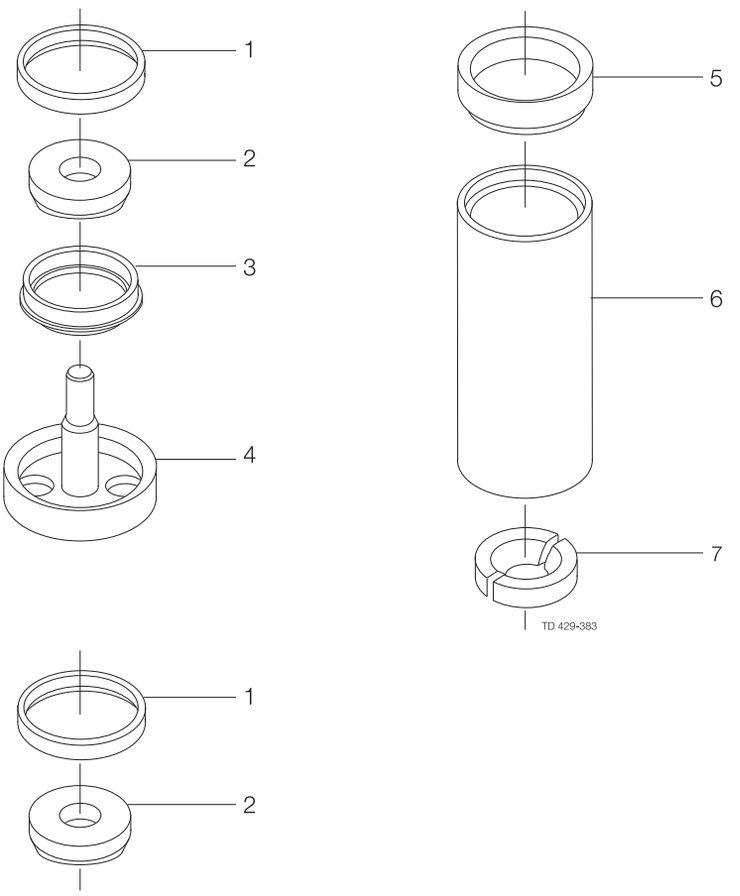

Tool for plug seals (six holes in lower plug, date marked body)

Pos	Qty	Denomination	51-76 mm DN 50-65	101.6 mm DN 80-100	DN125-150
		. . . . .	9612385601	9612385602	9612485601

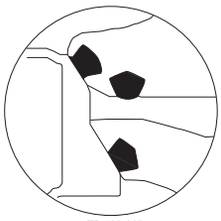

TD 429-387

Extra tool for lower plug seals (three-bodied version)

Pos	Qty	Denomination	51-76 mm DN 50-65	101.6 mm DN 80-100
		. . . . .	9612372201	9612372202

Tool for plug seals (two holes in lower plug, before 9310)

Pos	Qty	Denomination	51-76 mm DN 50-65	101.6 mm DN 80-100
		. . . . .		

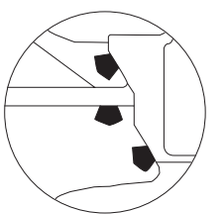

TD 429-388

Not manufactured anymore

1.6

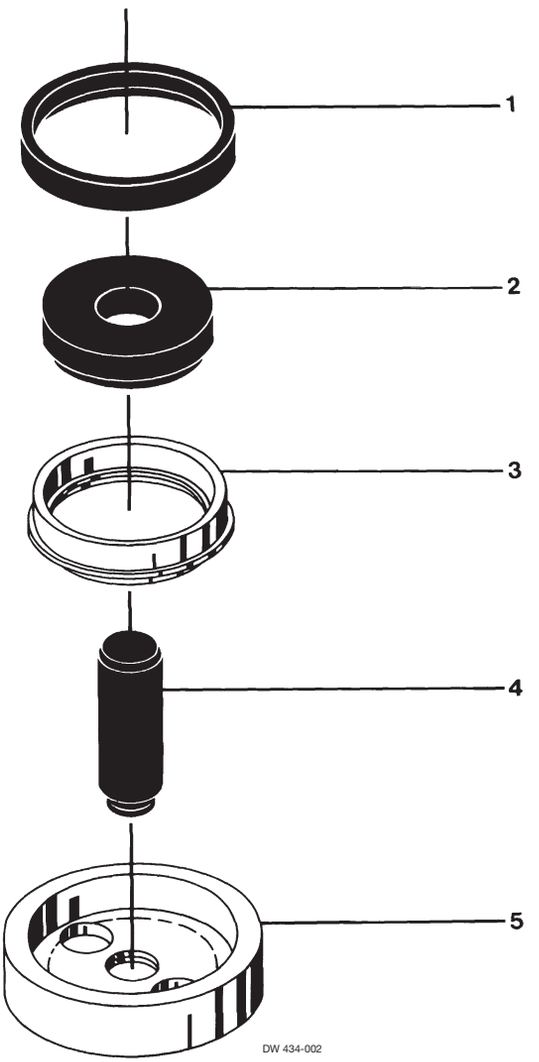

SMP-TO Sanitary Mixproof Tank Outlet Valve, tool for plug seals

Pos	Qty	Denomination	9612453801
1	1	Outer guide ring	
2	1	Inner guide ring	
3	1	Piston ring	
4	1	Spindle	
5	1	Tool housing	

900-418

Not manufactured anymore

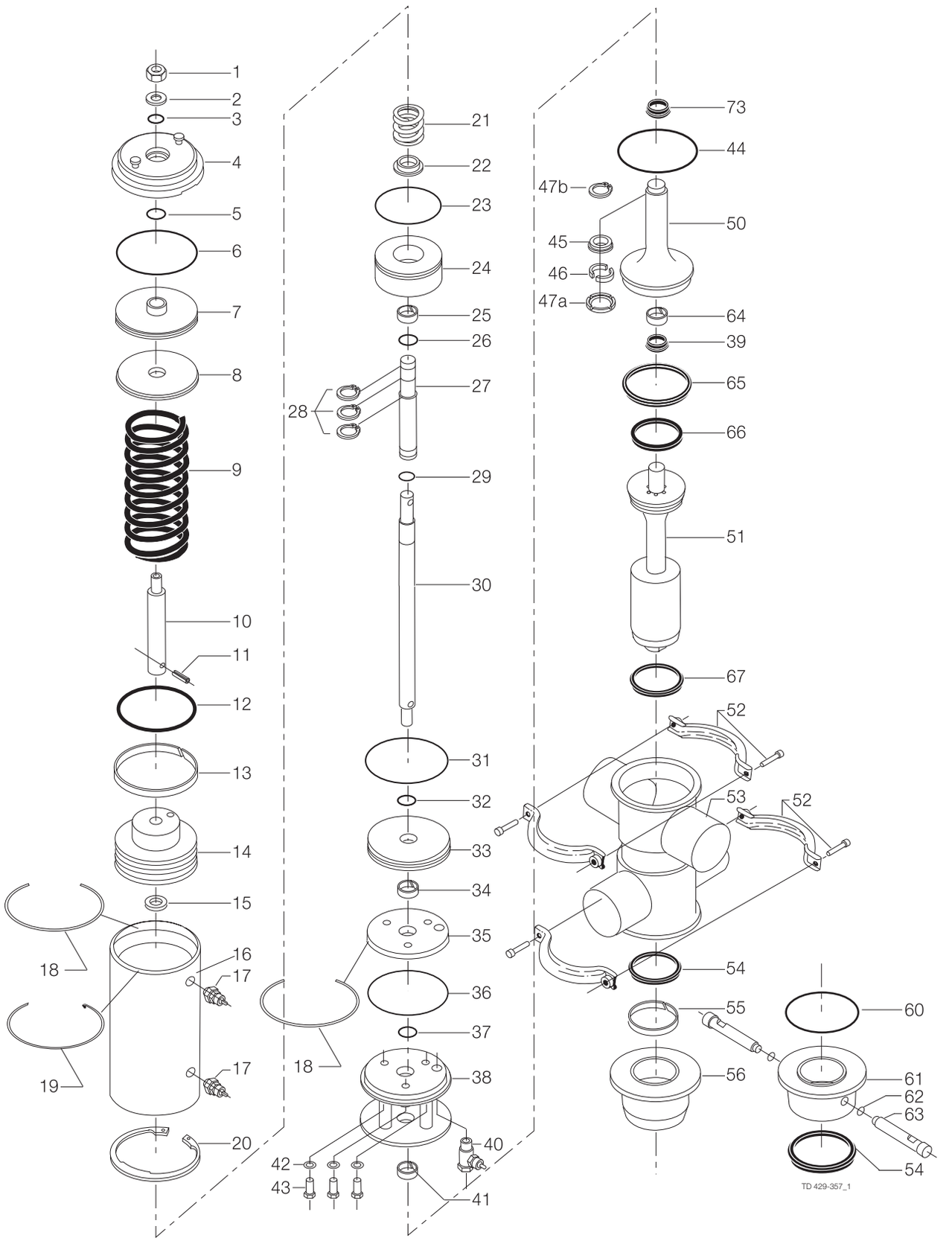

Pos		Qty	Denomination	51-76.1 mm DN50-65	101.6 mm DN80-100
1		1	Nut	9611992576	9611992576
2		1	Washer	9611990706	9611990706
3	□	1	O-ring, NBR	9611990096	9611990096
4		1	Cylinder lid		
5	□	1	O-ring, NBR	22340625	22340625
6	□	1	O-ring, NBR	26010467	9611992579
7		1	Upper piston	9612291301	9612310101
8		1	Flange	9612291401	9612310201
9		1	Spring	9612292801	9612315401
11		1	Pin	9611992562	9611991314
12	□	1	O-ring, NBR	9611992556	9611992580
13		1	Guide ring, Turcite	9612292601	9612292608
14		1	Main piston		
16		1	Cylinder, without 3A marking		
		1	Cylinder, with 3A marking		
17		2	Air fitting		
18		2	Retaining ring	9612292901	9612292902
19		1	Lock ring	9612293001	9612313201
20		1	Circlip	9611992561	
21		1	Spring		
23	□	1	O-ring, NBR	9611992568	9611990643
24		1	Piston		
25		1	Guide ring, Turcite		9612292604
26	□	1	O-ring, NBR	22340625	9611992582
27		1	Upper stem		9612313401
28		3	Circlip	9611992565	9611992588
29	□	1	O-ring, NBR	22340431	22340625
31	□	1	O-ring, NBR	26010467	9611992580
32	□	1	O-ring, NBR	22340625	9611992581
33		1	Lower piston	9612290501	
34		1	Guide ring, Turcite		9612292610
35		1	Flange		9612312001
36	♦○	1	O-ring, NBR	26010467	9611992579
37	♦○	1	O-ring, NBR	22340625	9611992581
38		1	Bonnet		
39	♦○	1	Lip seal, EPDM (Standard)	9612320501	9612316801
		1	Lip seal, NBR	9612320502	9612316802
		1	Lip seal, FPM	9612320503	
40		1	Air fitting	9611992564	9611992564
41		1	Guide ring, PTFE	9612292613	9612292612
42	♦○	3	Washer	9611992572	9611992590
43		3	Screw	9611990462	9611991910
44	♦○	1	O-ring, EPDM (Standard)	9611992931	9611992934
		1	O-ring, NBR	9611992932	9611992935
		1	O-ring, FPM	9611992933	
45		1	Lock ring	9612298301	9612313601
46		2	Clamp ring		
47a		1	Clip ring	3135307271	
47b		1	Circlip		9611992663
52		2	Clamp complete	9611311055	9611311057
54	♦○	1	Double lip seal, EPDM (Standard)	9612317501	9612320401
		1	Double lip seal, NBR	9612317502	9612320402
		1	Double lip seal, FPM	9612317503	
55		1	Guide ring, PTFE	9612292602	9612292606
56		1	Balancing housing (Standard)		
64		1	Guide ring	9612292613	9612292612
65	♦○	1	Seal ring, EPDM, (Standard)	9612359303	9612359309
		1	Seal ring, NBR	9612359301	9612359307
		1	Seal ring, FPM	9612359302	
66	♦○	1	Seal ring, EPDM, (Standard)	9612359406	9612359403
		1	Seal ring, NBR	9612359404	
		1	Seal ring, FPM	9612359405	
67	♦○	1	Seal ring, EPDM (Standard)	9612359306	9612359312
		1	Seal ring, NBR	9612359304	9612359310
		1	Seal ring, FPM	9612359305	9612359311
73	♦○	1	Lip seal, EPDM (Standard)	9612317504	9612320404
		1	Lip seal, NBR	9612317505	9612320405
		1	Lip seal, FPM	9612317506	9612320406

Not manufactured anymore

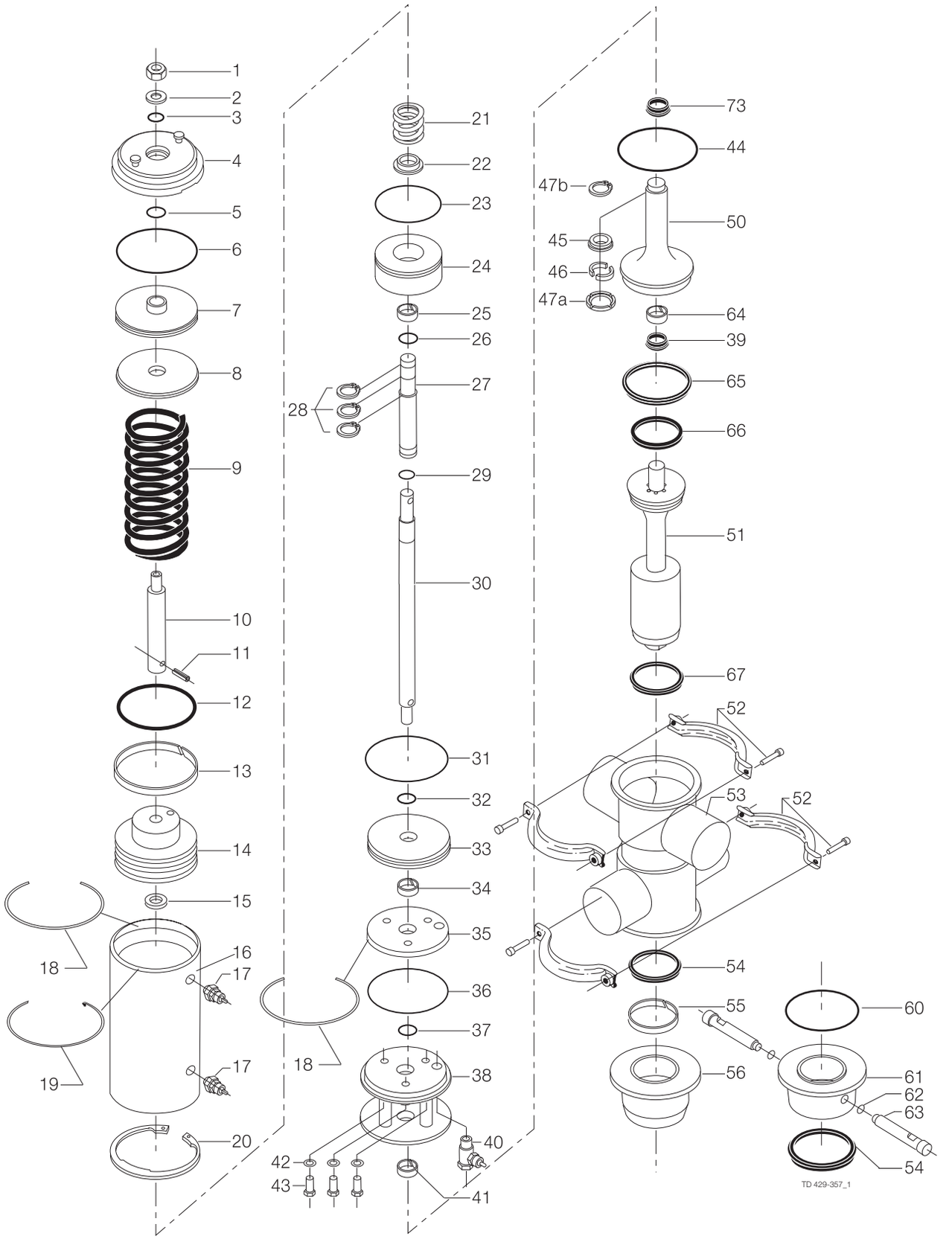

Pos		Qty	Denomination	51-76.1 mm DN50-65	101.6 mm DN80-100
CIP-kit for balancing plug complete, EPDM					
54	○	1	Double lip seal, EPDM (Standard)	9612317501	9612320401
55		1	Guide ring, PTFE	9612292602	9612292606
60	○	1	O-ring for CIP, EPDM	9611992700	9611992571
61		1	Balancing housing for CIP		
62		2	O-ring, EPDM (Period 9603-)	9611993119	9611993119
		2	Washer, Nylon (Period 9501-9603)	9611992566	9611992566
63		2	Flushing tube, (Period 9603-)	3135710171	3135710171
		2	Flushing tube, (Period 9501-9603)	3135710131	3135710131
Accessories					
		1	Tool complete for actuator	9612317401	9612317401

Pos	Qty	Denomination	51mm DN50	63.5mm DN65	76.1mm	DN80	101.6mm DN100
		Actuator complete (Pos. 1-38, 40-44, 73)					
30	1	Inner stem					
50	1	Upper plug					
	1	Upper plug, EPDM (Pos.39+50+64+65+66)					
	1	Upper plug, NBR (Pos.39+50+64+65+66)					
	1	Upper plug, FPM (Pos.39+50+64+65+66)					
51	1	Lower plug					
	1	Lower plug, EPDM (Pos.51+67)					
	1	Lower plug, NBR (Pos.51+67)					
	1	Lower plug, FPM (Pos.51+67)					

Pos	Qty	Denomination	51 mm	63.5 mm	76.1 mm	101.6 mm
53	1	Valve body, 11-00				
	1	Valve body, 12-00				
	1	Valve body, 21-00				
	1	Valve body, 22-00				
	1	Valve body, 11-90				
	1	Valve body, 12-90				
	1	Valve body, 21-90				
	1	Valve body, 22-90				
	1	Valve body, 11-180				
	1	Valve body, 11-270				

Pos	Qty	Denomination	DN 50	DN 65	DN80	DN100
53	1	Valve body, 11-00				
	1	Valve body, 12-00				
	1	Valve body, 21-00				
	1	Valve body, 22-00				
	1	Valve body, 11-90				
	1	Valve body, 12-90				
	1	Valve body, 21-90				
	1	Valve body, 22-90				
	1	Valve body, 11-180				
	1	Valve body, 11-270				

Type 11-00

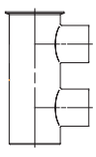

TD 429-019_1

Type 11-90

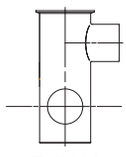

TD 429-019_2

Type 11-180

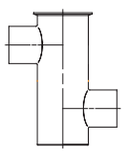

TD 429-019_3

Type 11-270

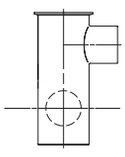

TD 429-019_4

Type 12-00

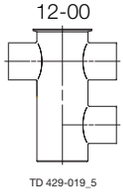

TD 429-019_5

Type 12-90

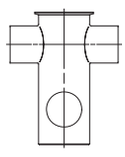

TD 429-019_6

Type 21-00

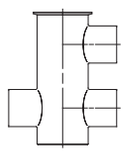

TD 429-019_7

Type 21-90

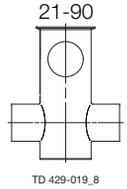

TD 429-019_8

Type 22-00

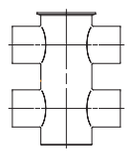

TD 429-019_9

Type 22-90

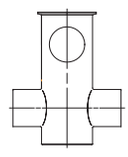

TD 429-019_10

Not manufactured anymore

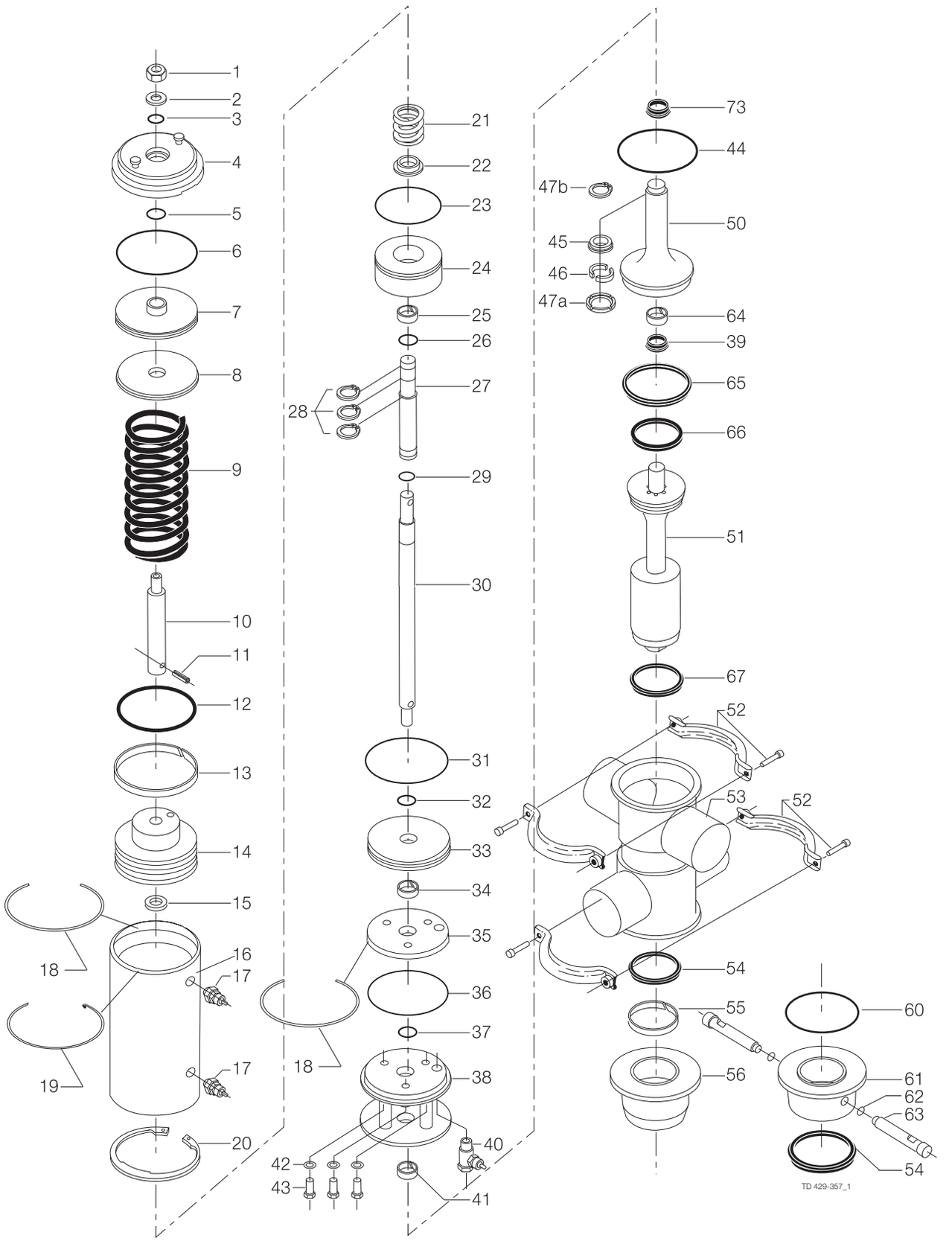

Pos	Qty	Denomination	51 mm	63.5 mm	76 mm	101.6 mm
Surface roughness, inside of valve body: Ra ≤0.8 µm						
53	1	Valve body 11-00				
	1	Valve body 12-00				
	1	Valve body 21-00				
	1	Valve body 22-00				
	1	Valve body 11-90				
	1	Valve body 12-90				
	1	Valve body 21-90				
	1	Valve body 22-90				
	1	Valve body 11-180				
	1	Valve body 11-270				

Pos	Qty	Denomination	DN50	DN65	DN80	DN100
Surface roughness, inside of valve body: Ra ≤0.8 µm						
53	1	Valve body 11-00				
	1	Valve body 12-00				
	1	Valve body 21-00				
	1	Valve body 22-00				
	1	Valve body 11-90				
	1	Valve body 12-90				
	1	Valve body 21-90				
	1	Valve body 22-90				
	1	Valve body 11-180				
	1	Valve body 11-270				

(Period 9709 -)

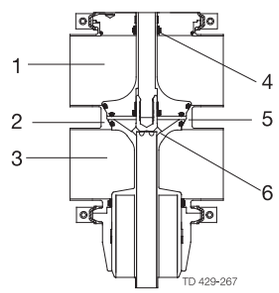

1: No upper valve body distance
2: Cylindrical throttling edge
3: No lower valve body distance
4: 1 double lip seal, not externally visible
5: Datemark between valve bodies
6: 6 leakage holes

Not manufactured anymore

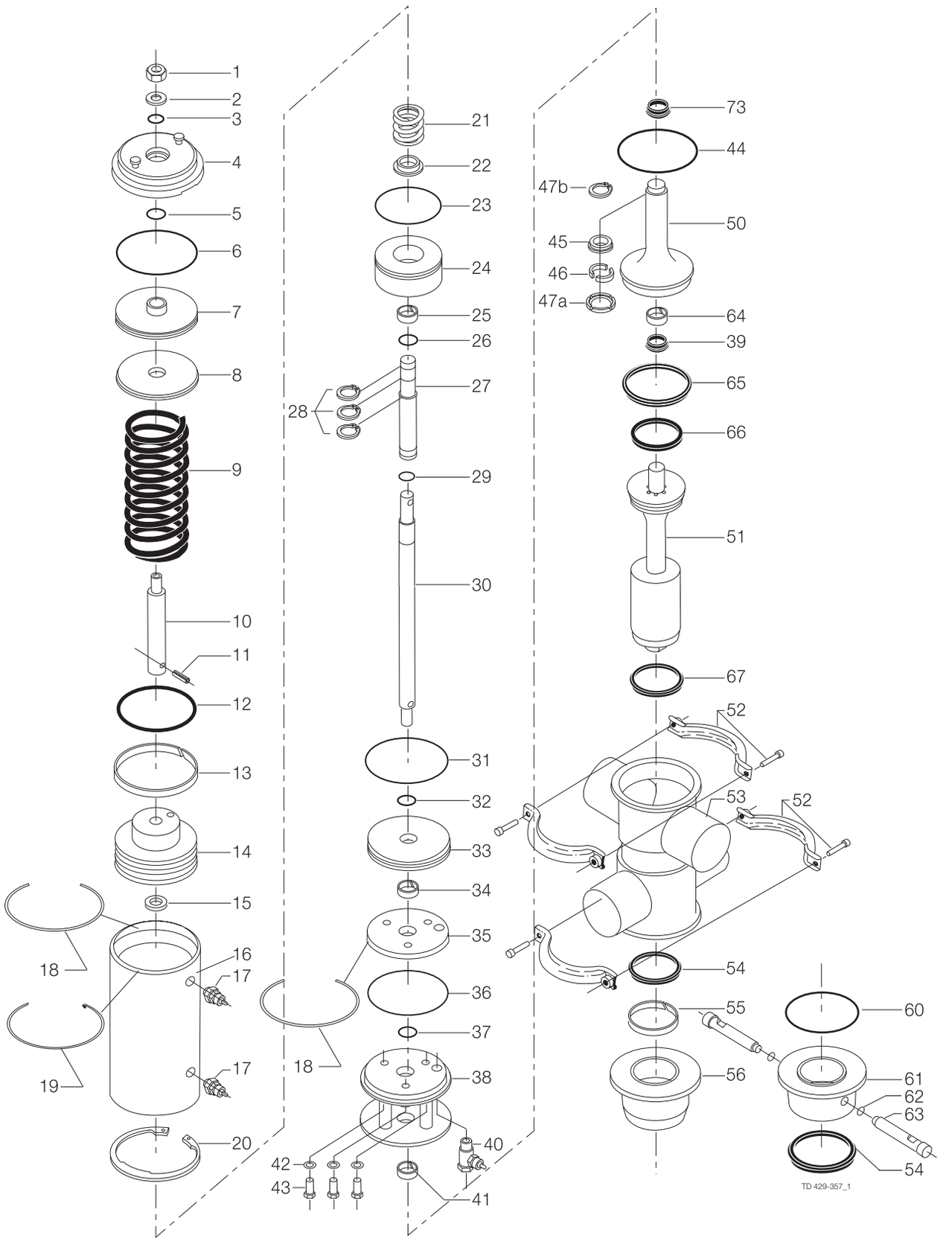

		DN50-65 51-76 mm	DN80-100 101.6 mm
Service kit for actuator			
□	Service kit, NBR.	9611920127	9611920130
Service kit for product wetted parts, standard			
♦	Service kit, EPDM.	9611920238	9611920241
♦	Service kit, NBR.	9611920239	
Service kit for CIP-connection on balancing housing			
○	Service kit, EPDM.	9611920244	9611920247
○	Service kit, NBR.	9611920245	

Parts marked with □♦○ are included in Service kit.

Recommended Spare Parts: Service kit.

900164/1

Not manufactured anymore

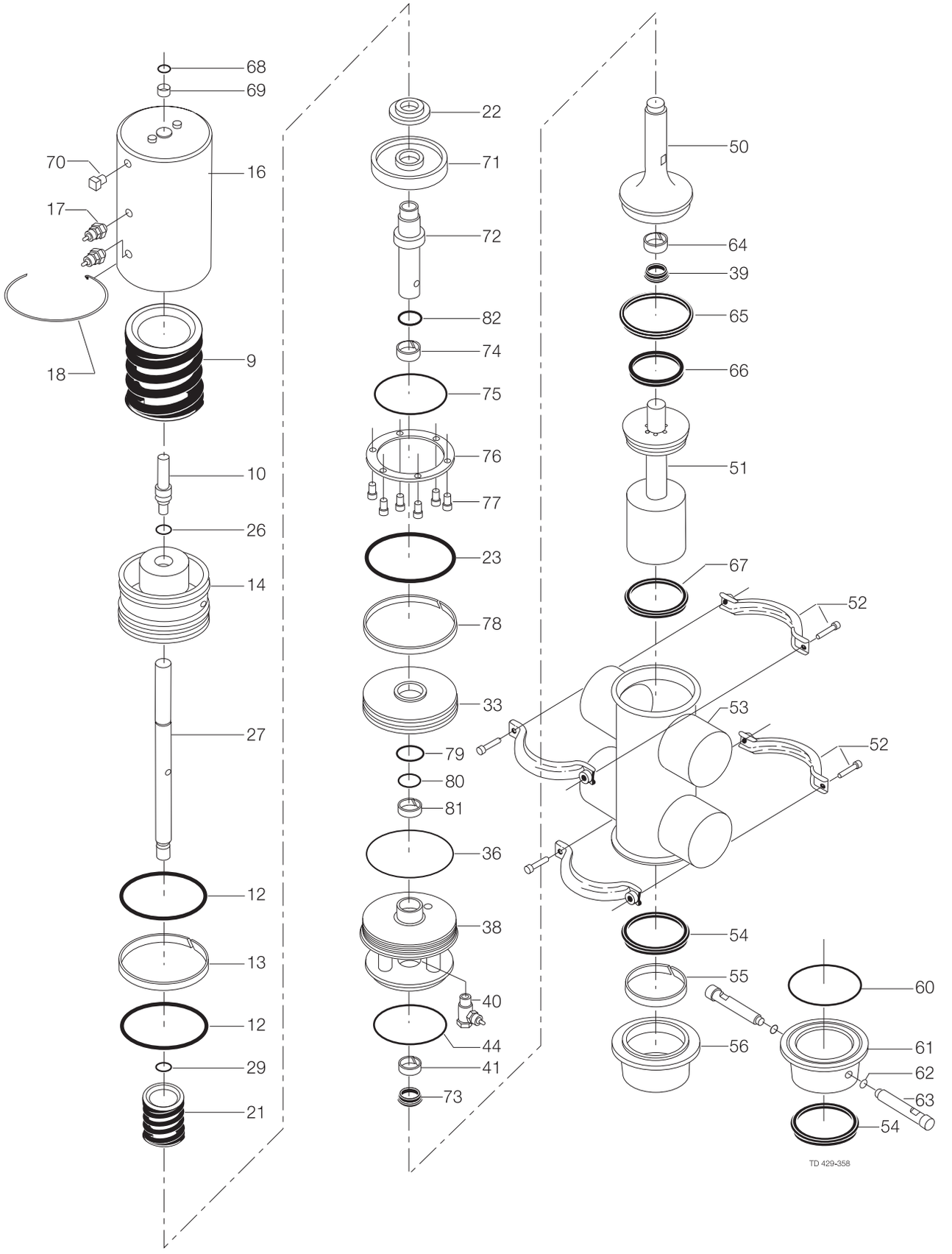

Pos		Qty	Denomination	DN 125	DN 150
9		1	Spring assembly		
10		1	Upper piston rod		
12	□	2	O-ring, NBR (standard)	9611993008	9611993008
13		1	Guide ring, Turcite	9612292618	9612292618
14		1	Main piston		
16		1	Cylinder, without 3A marking		
		1	Cylinder, with 3A marking		
17		2	Air fitting		
18		1	Lock wire	9612380501	9612380501
21		1	Spring assembly		
22		1	Spring support		
23	□	1	O-ring, NBR (standard)	9611993010	9611993010
26	□	1	O-ring, NBR (standard)	9611993007	9611993007
27		1	Lower piston rod		
29	□	1	O-ring, NBR (standard)	9611993007	9611993007
33		1	Lower piston		
36	□	1	O-ring, NBR (standard)	9611992892	9611992892
38		1	Bonnet	9612508001	9612508001
39	♦○	1	Lip seal, EPDM (standard)	9612316801	9612316801
		1	Lip seal, NBR	9612316802	9612316802
		1	Lip seal, FPM		
40		1	Air fitting	9611992564	9611992564
41		1	Guide ring, PTFE	9612292621	9612292621
44	♦○	1	O-ring, EPDM (standard)	9611992937	9611992937
		1	O-ring, NBR	9611992938	9611992938
		1	O-ring, FPM	9611992939	9611992939
50		1	Upper plug		
		1	Upper plug, EPDM (Pos. 36+37+38+39+40)		
		1	Upper plug, NBR (Pos. 36+37+38+39+40)		
		1	Upper plug, FPM (Pos. 36+37+38+39+40)		
51		1	Lower plug		
		1	Lower plug, EPDM (Pos. 41+42)		
		1	Lower plug, NBR (Pos. 41+42)		
		1	Lower plug, FPM (Pos. 41+42)		
52		2	Clamp complete	9611311058	9611311058
54	♦○	1	Lip seal, EPDM (standard)	9612320410	9612320410
		1	Lip seal, NBR		
		1	Lip seal, FPM		
55		1	Guide ring	9612292622	9612292622
56		1	Balancing housing		
64		1	Guide ring, PTFE	9612292612	9612292612
65	♦○	1	Seal ring, EPDM (standard)	9612359324	9612359324
		1	Seal ring, NBR		
		1	Seal ring, FPM		
66	♦○	1	Seal ring, EPDM (standard)	9612359412	9612359412
		1	Seal ring, NBR		
		1	Seal ring, FPM		
67	♦○	1	Seal ring, EPDM (standard)	9612359327	9612359327
		1	Seal ring, NBR		
		1	Seal ring, FPM		
68	□	1	O-ring, NBR (standard)	9611993006	9611993006
69		1	Guide ring, Turcite	9612292616	9612292616
70		1	Plug		
71		1	Support piston		
72		1	Outer piston rod		
73	♦○	1	Lip seal, EPDM (standard)	9612320407	9612320407
		1	Lip seal, NBR	9612320408	9612320408
		1	Lip seal, FPM	9612320409	9612320409
74		1	Guide ring, Turcite		
75	□	1	O-ring, NBR (standard)	9611991489	9611991489
76		1	Support flange		
77		6	Screw for support flange	9611991930	9611991930
78		1	Guide ring, Turcite		
79	□	1	O-ring, NBR (standard)	9611993011	9611993011
80	□	1	O-ring, NBR (standard)	9611993012	9611993012
81		1	Guide ring, Turcite	9612292620	9612292620
82	□	1	O-ring, NBR (standard)	9611993009	9611993009

Not manufactured anymore

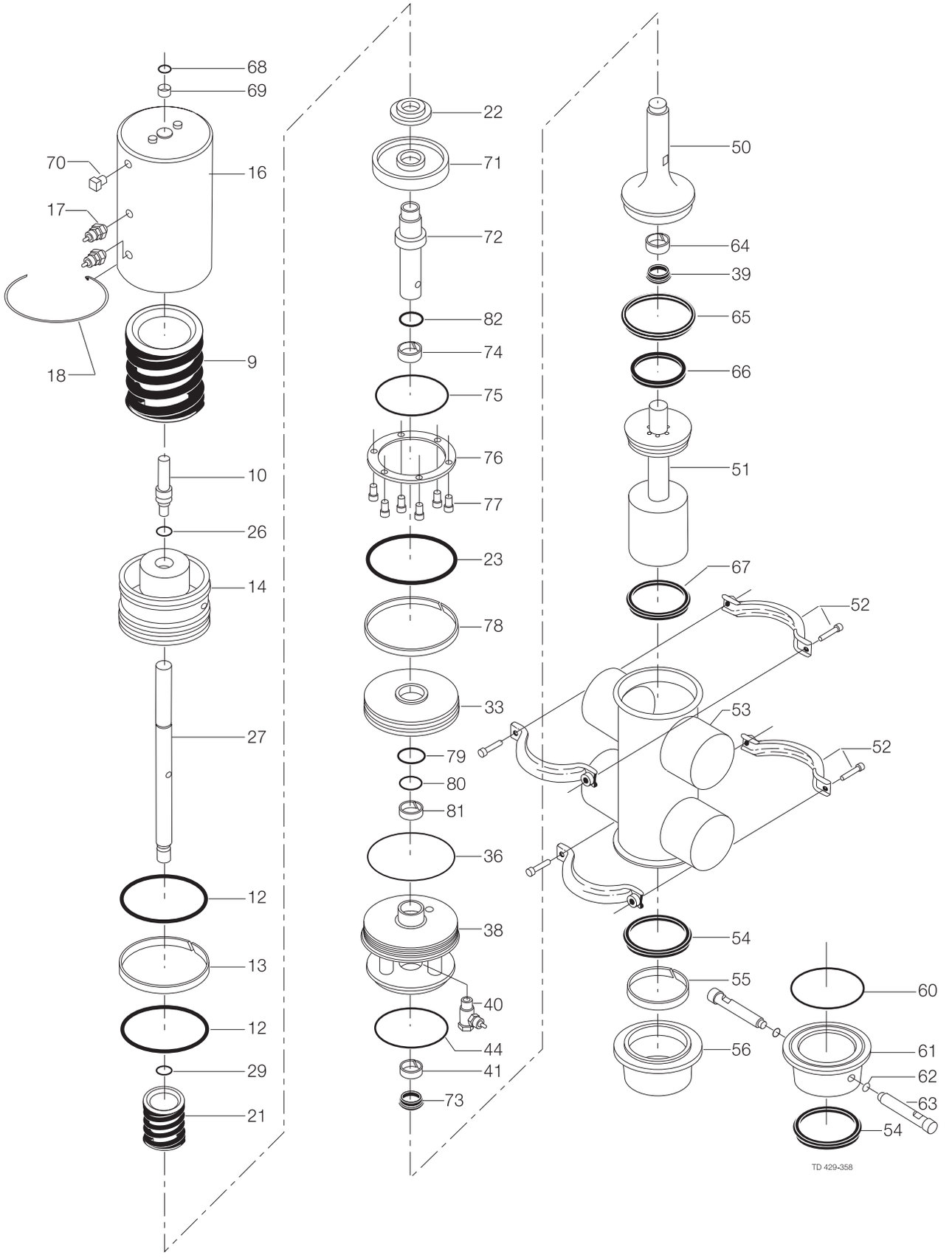

Pos		Qty	Denomination	DN 125	DN 150
CIP-kit for balancing plug complete, EPDM					
54	○	1	Lip seal, EPDM	9612320410	9612320410
60	○	1	O-ring	9611993162	9611993162
61		1	Balancing housing with CIP connections		
62	○	2	O-ring, EPDM	9611993119	9611993119
63		2	Flushing tube	3135710171	3135710171

Pos	Qty	Denomination	DN 125	DN 150
53	1	Valve body, 11-00		
	1	Valve body, 12-00		
	1	Valve body, 21-00		
	1	Valve body, 22-00		
	1	Valve body, 11-90		
	1	Valve body, 12-90		
	1	Valve body, 21-90		
	1	Valve body, 22-90		
	1	Valve body, 11-180		
	1	Valve body, 11-270		

Pos	Qty	Denomination	DN125	DN150
Surface roughness, inside of valve body: Ra ≤0.8 µm				
44	1	Valve body 11-00		
	1	Valve body 12-00		
	1	Valve body 21-00		
	1	Valve body 22-00		
	1	Valve body 11-90		
	1	Valve body 12-90		
	1	Valve body 21-90		
	1	Valve body 22-90		
	1	Valve body 11-180		
	1	Valve body 11-270		

Type 11-00

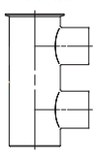

TD 429-019_1

Type 11-90

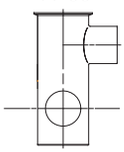

TD 429-019_2

Type 11-180

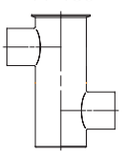

TD 429-019_3

Type 11-270

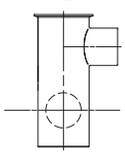

TD 429-019_4

Type 12-00

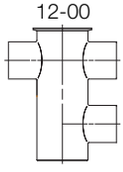

TD 429-019_5

Type 12-90

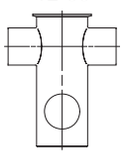

TD 429-019_6

Type 21-00

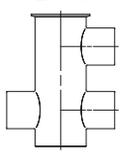

TD 429-019_7

Type 21-90

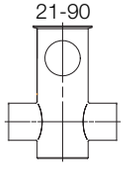

TD 429-019_8

Type 22-00

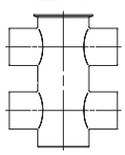

TD 429-019_9

Type 22-90

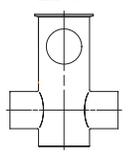

TD 429-019_10

		DN 125	DN 150
Service kit for actuator			
□	**Service kit, NBR**	**9611920346**	**9611920346**
Service kit for product wetted parts			
♦	**Service kit, EPDM**	**9611920347**	**9611920347**
Service kit for CIP-connection on balancing housing			
○	**Service kit, EPDM**	**9611920350**	**9611920350**

Parts marked with □♦○ are included in Service kit.

Recommended Spare Parts: Service kit.

900165/1

Not manufactured anymore

1.6

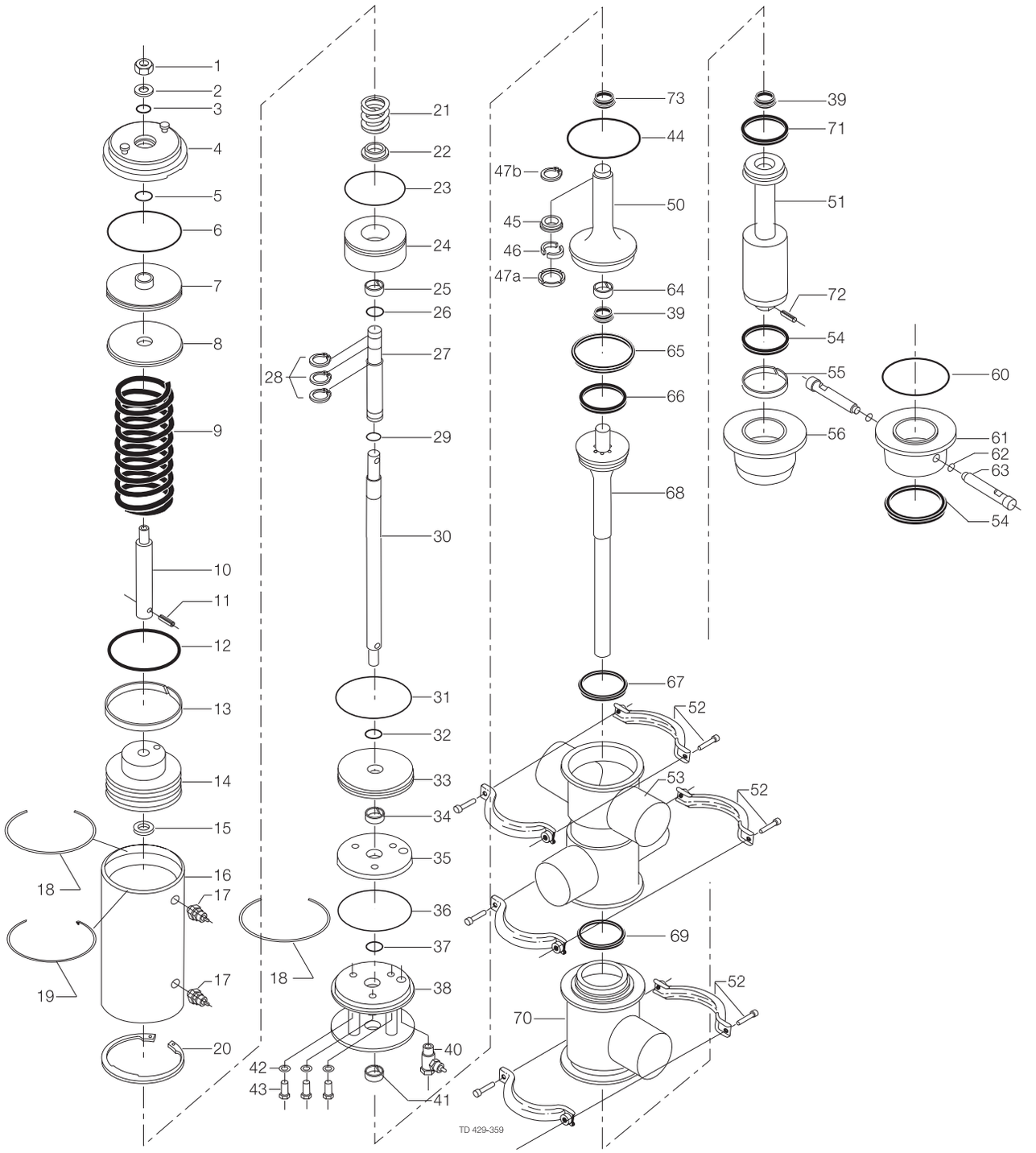

Pos		Qty	Denomination	51-76.1 mm DN50-65	101.6 mm DN80-100
1		1	Nut	9611992576	9611992576
2		1	Washer	9611990706	9611990706
3	□	1	O-ring, NBR	9611990096	9611990096
4		1	Cylinder lid		
5	□	1	O-ring, NBR	22340625	22340625
6	□	1	O-ring, NBR	26010467	9611992579
7		1	Upper piston		
8		1	Flange		
9		1	Spring		
10		1	Upper piston rod		
11		1	Pin	9611992562	9611991314
12	□	1	O-ring, NBR	9611992556	9611992580
13		1	Guide ring, Turcite	9612292601	9612292608
14		1	Main piston	9612293501	9612310501
16		1	Cylinder, without 3A marking		
		1	Cylinder, with 3A marking		
17		2	Air fitting		
18		2	Retaining ring	9612292901	9612292902
19		1	Lock ring	9612293001	9612313201
20		1	Circlip	9611992561	
21		1	Spring	9612292701	
23	□	1	O-ring, NBR	9611992568	9611990643
24		1	Piston		
25		1	Guide ring, Turcite		9612292604
26	□	1	O-ring, NBR	22340625	9611992582
27		1	Lower piston rod		9612313401
28		3	Circlip	9611992565	9611992588
29	□	1	O-ring, NBR	22340431	22340625
31	□	1	O-ring, NBR	26010467	9611992580
32	□	1	O-ring, NBR	22340625	9611992581
33		1	Lower piston	9612290501	
34		1	Guide ring, Turcite		9612292610
35		1	Flange		
36	◆○	1	O-ring, NBR	26010467	9611992579
37	◆○	1	O-ring, NBR	22340625	9611992581
38		1	Bonnet		
39	◆○	2	Lip seal, EPDM (Standard)	9612320501	9612316801
		2	Lip seal, NBR	9612320502	9612316802
		2	Lip seal, FPM	9612320503	
40		1	Air fitting	9611992564	9611992564
41		1	Guide ring, PTFE	9612292613	9612292612
42	◆○	3	Washer	9611992572	9611992590
43		3	Screw	9611990462	9611991910
44	◆○	1	O-ring, EPDM (Standard)	9611992931	9611992934
		1	O-ring, NBR	9611992932	9611992935
		1	O-ring, FPM	9611992933	
45		1	Lock ring	9612298301	9612313601
46		2	Clamp ring		
47a		1	Clip ring	3135307271	
47b		1	Circlip		9611992663
51		1	Lower plug		
		1	Lower plug, EPDM (Pos.51+71)		
		1	Lower plug, NBR (Pos.51+71)		
		1	Lower plug, FPM (Pos.51+71)		
52		3	Clamp complete	9611311055	9611311057
54		1	Double lip seal, NBR	9612317502	9612320402
		1	Double lip seal, FPM	9612317503	
	◆○	1	Double lip seal, EPDM (standard)	9612317501	9612320401
55		1	Guide ring, PTFE	9612292602	9612292606
56		1	Balancing housing (standard)		
64		1	Guide ring	9612292611	9612292612

Not manufactured anymore

1.6

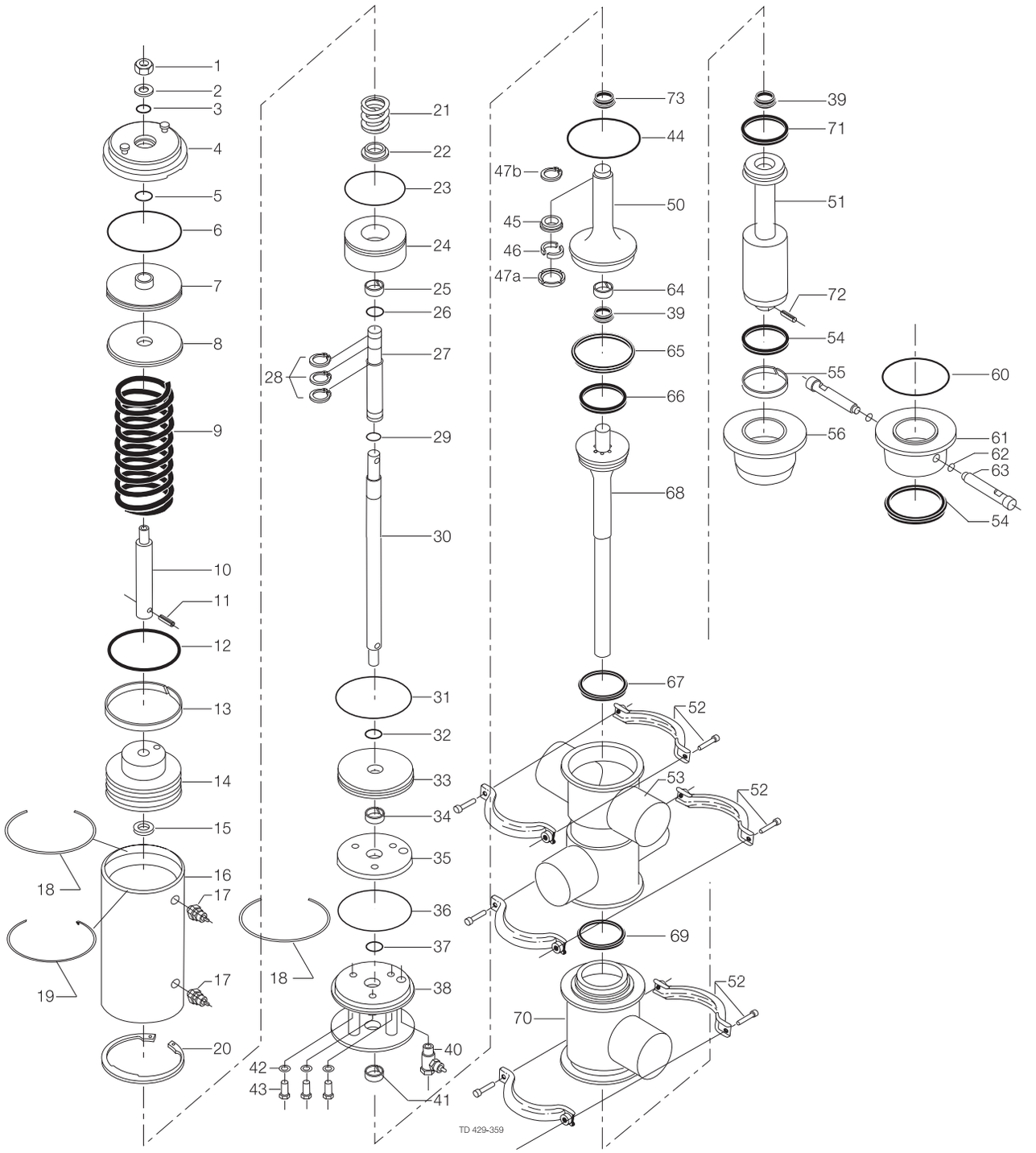

Pos		Qty	Denomination	51-76.1 mm DN50-65	101.6 mm DN80-100
65	◆○	1	Seal ring, EPDM, (Standard)	9612359303	9612359309
		1	Seal ring, NBR	9612359301	9612359307
		1	Seal ring, FPM	9612359302	
66	◆○	1	Seal ring, EPDM, (Standard)	9612359406	9612359403
		1	Seal ring, NBR	9612359404	
		1	Seal ring, FPM	9612359405	
67	◆○	1	Seal ring, EPDM (Standard)	9612359306	9612359312
		1	Seal ring, NBR	9612359304	9612359310
		1	Seal ring, FPM	9612359305	
69	◆○	1	Seal, EPDM (Standard)	9612320504	9612316804
		1	Seal, NBR		
		1	Seal, FPM		
71	◆○	1	Seal ring, EPDM (Standard)	9612359315	
		1	Seal ring, NBR		
		1	Seal ring, FPM		
72		1	Connex pin	9611992743	
73	◆○	1	Lip seal, EPDM (Standard)	9612317504	9612320404
		1	Lip seal, NBR	9612317505	9612320405
		1	Lip seal, FPM	9612317506	
Alternative					
CIP-kit for balancing plug complete, EPDM					
54	○	1	Double lip seal, EPDM (Standard)	9612317501	9612320401
55		1	Guide ring PTFE	9612292602	9612292606
60	○	1	O-ring for CIP, EPDM	9611992700	9611992571
61		1	Balancing housing for CIP		
62		2	O-ring, EPDM (Period 9603-)	9611993119	9611993119
		2	Washer, Nylon (Period 9501-9603)	9611992566	9611992566
63		2	Flushing tube, (Period 9603-)	3135710171	3135710171
		2	Flushing tube, (Period 9501-9603)	3135710131	3135710131
Accessories					
		1	Tool complete for actuator	9612317401	9612317401

Recommended spare parts: Service Kits

Pos	Qty	Denomination	51mm DN50	63.5mm DN65	76.1 mm	DN80	101.6mm DN100
	1	Actuator complete (Pos. 1-38, 40-44, 73)					
30	1	Inner stem					
50	1	Upper plug					
	1	Upper plug, EPDM (Pos.39+50+64+65+66)					
	1	Upper plug, NBR (Pos.39+50+64+65+66)					
	1	Upper plug, FPM (Pos.39+50+64+65+66)					
68	1	Middle plug					
	1	Middle plug, EPDM (Pos. 68 + 67)					
	1	Middle plug, NBR (Pos. 68 + 67)					
	1	Middle plug, FPM (Pos. 68 + 67)					

Not manufactured anymore

1.6

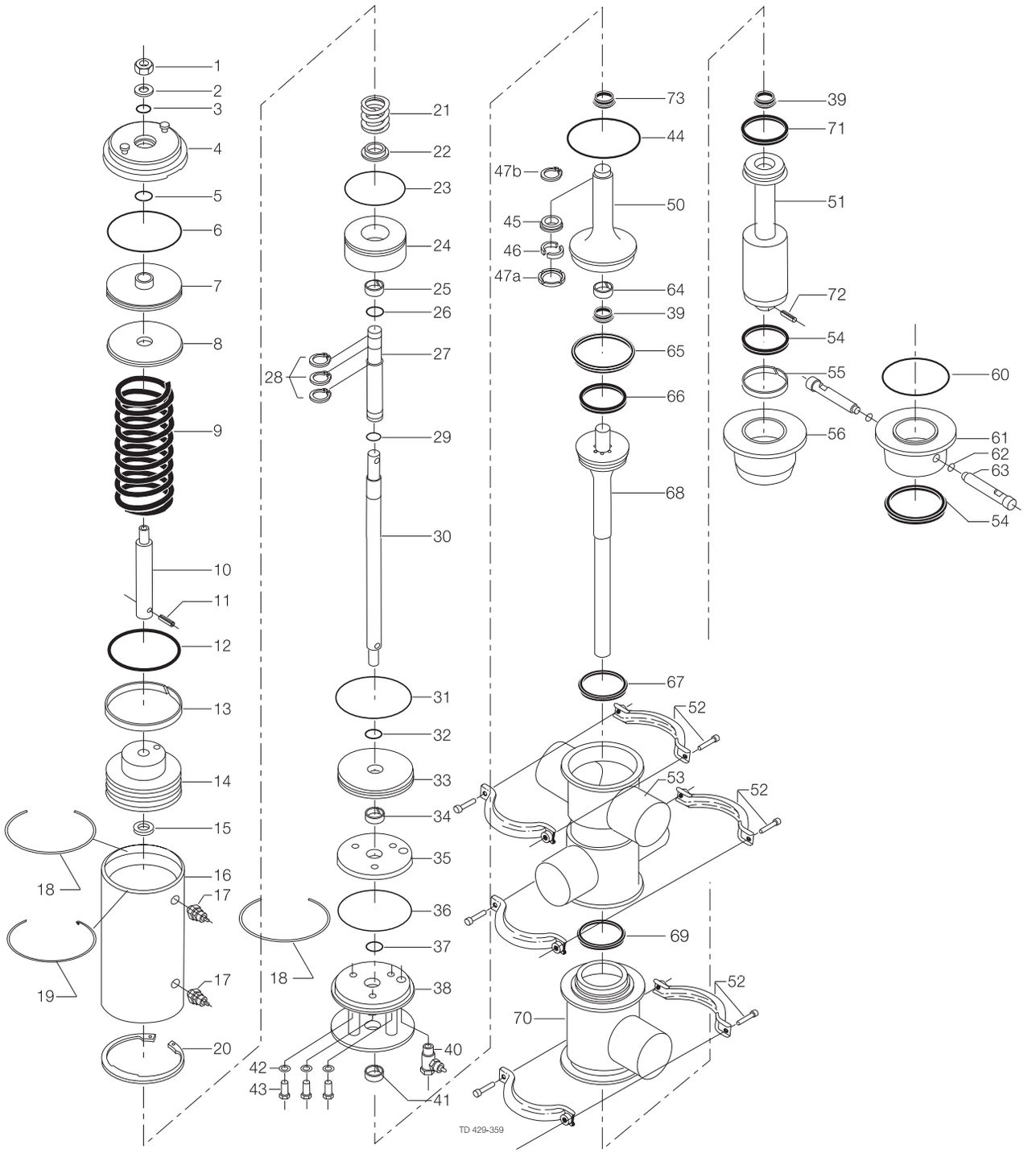

Pos	Qty	Denomination	51 mm	63.5 mm	76.1 mm	101.6 mm
53	1	Valve body, 11-00				
	1	Valve body, 12-00				
	1	Valve body, 21-00				
	1	Valve body, 22-00				
	1	Valve body, 11-90				
	1	Valve body, 12-90				
	1	Valve body, 21-90				
	1	Valve body, 22-90				
	1	Valve body, 11-180				
	1	Valve body, 11-270				
70	1	Lower valve body, 1 port				
	1	Lower valve body, 2 port				

Pos	Qty	Denomination	DN 50	DN 65	DN80	DN100
53	1	Valve body, 11-00				
	1	Valve body, 12-00				
	1	Valve body, 21-00				
	1	Valve body, 22-00				
	1	Valve body, 11-90				
	1	Valve body, 12-90				
	1	Valve body, 21-90				
	1	Valve body, 22-90				
	1	Valve body, 11-180				
	1	Valve body, 11-270				
70	1	Lower valve body, 1 port				
	1	Lower valve body, 2 port				

Pos	Qty	Denomination	51 mm	63.5 mm	76 mm	101.6 mm
Surface roughness, inside of valve body: Ra ≤0.8 µm						
53	1	Valve body 11-00				
	1	Valve body 12-00				
	1	Valve body 21-00				
	1	Valve body 22-00				
	1	Valve body 11-90				
	1	Valve body 12-90				
	1	Valve body 21-90				
	1	Valve body 22-90				
	1	Valve body 11-180				
	1	Valve body 11-270				
70	1	Lower valve body, 1 port				
	1	Lower valve body, 2 ports				

Pos	Qty	Denomination	DN50	DN65	DN80	DN100
Surface roughness, inside of valve body: Ra ≤0.8 µm						
53	1	Valve body 11-00				
	1	Valve body 12-00				
	1	Valve body 21-00				
	1	Valve body 22-00				
	1	Valve body 11-90				
	1	Valve body 12-90				
	1	Valve body 21-90				
	1	Valve body 22-90				
	1	Valve body 11-180				
	1	Valve body 11-270				
70	1	Lower valve body, 1 port				
	1	Lower valve body, 2 ports				

Type 11-00

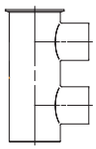

TD 429-019_1

Type 11-90

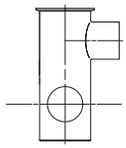

TD 429-019_2

Type 11-180

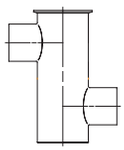

TD 429-019_3

Type 11-270

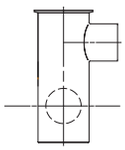

TD 429-019_4

Type 12-00

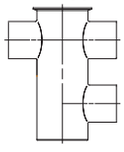

TD 429-019_5

Type 12-90

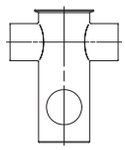

TD 429-019_6

Type 21-00

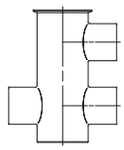

TD 429-019_7

Type 21-90

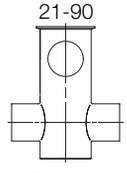

TD 429-019_8

Type 22-00

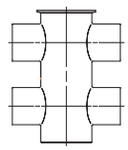

TD 429-019_9

Type 22-90

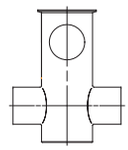

TD 429-019_10

Not manufactured anymore

1.6

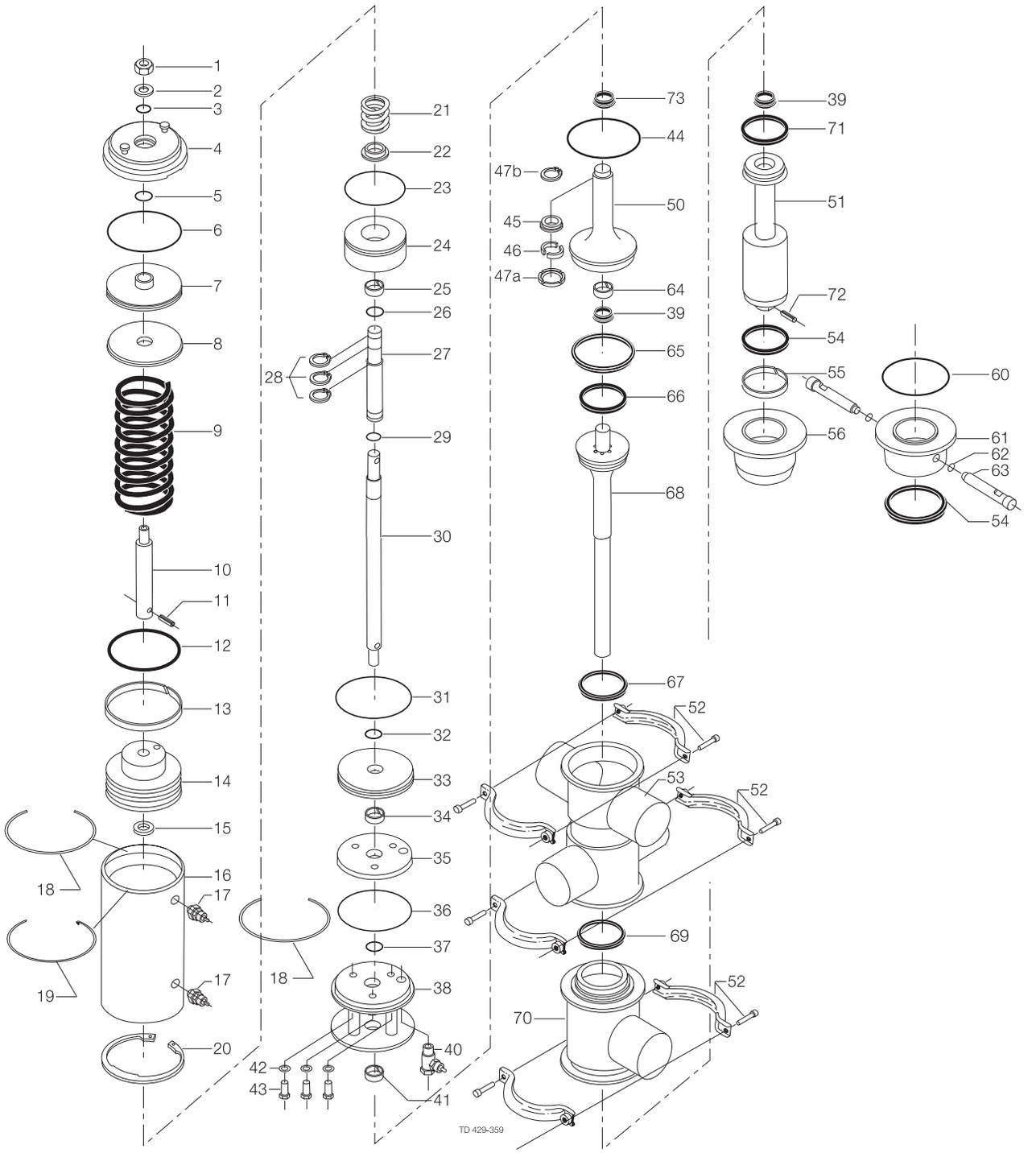

(Period 9709 -)

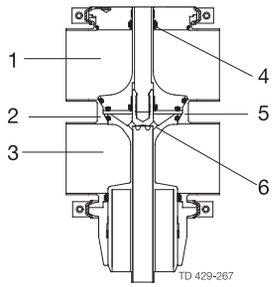

1: No upper valve body distance
2: Cylindrical throttling edge
3: No lower valve body distance
4: 1 double lip seal, not externally visible
5: Datamark between valve bodies
6: 6 lealage holes

		51 mm DN50	76.1 mm DN80	101.6 mm DN100
Service kit for actuator				
□	Service kit, NBR	9611920127	9611920127	9611920130
Service kit for product wetted parts				
♦	Service kit, EPDM.	9611920256	9611920256	
Service kit for CIP-connection on balancing housing				
○	Service kit, EPDM.	9611920262	9611920262	

Parts marked with □♦○ are included in service kit.

Recommended spare parts: service kit.

TD 900166/1

Not manufactured anymore

1.6

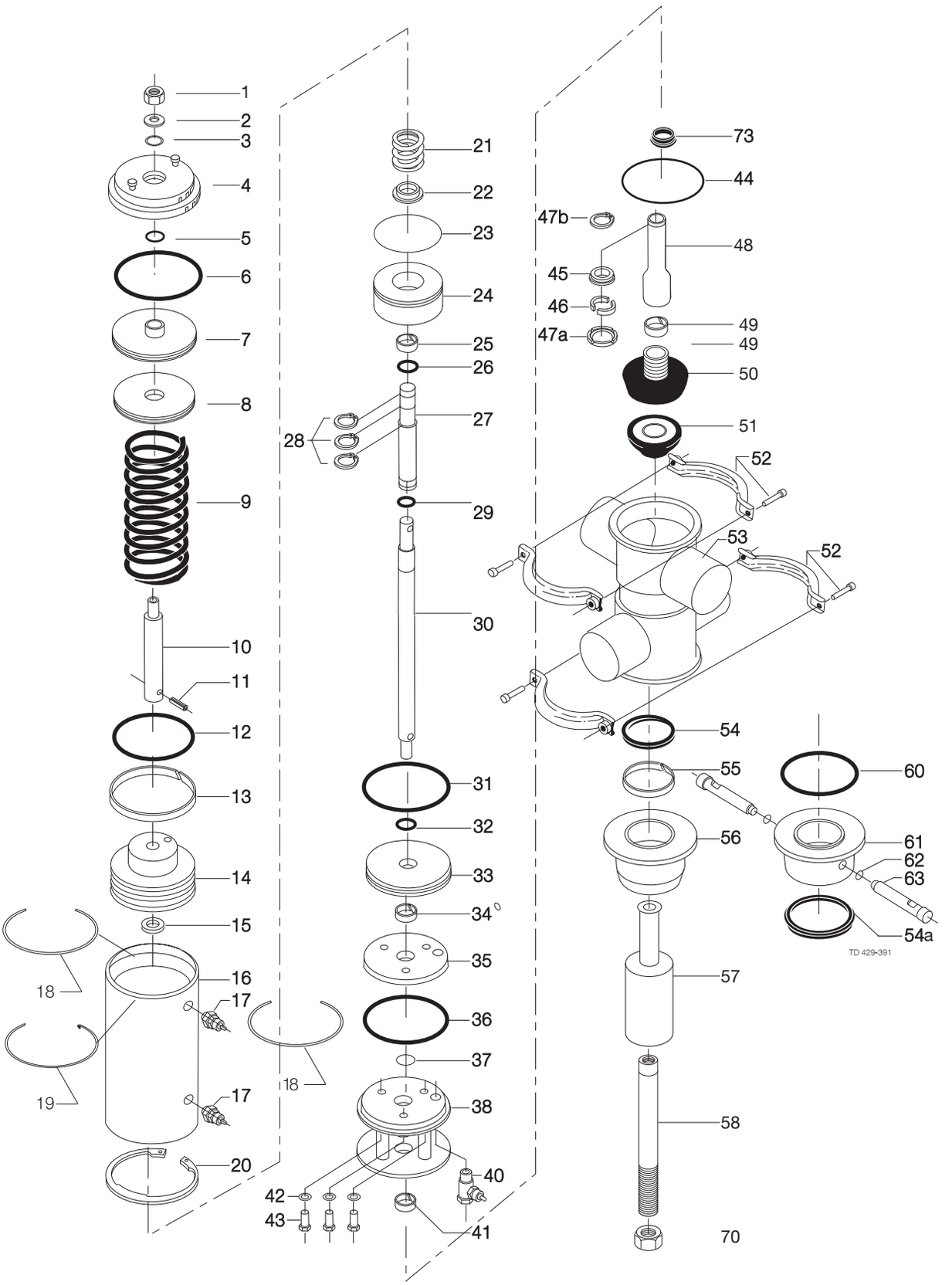

Pos		Qty	Denomination	51-76 mm DN50-65	101.6 mm DN80-100
1		1	Nut	9611992576	9611992576
2		1	Washer	9611990706	9611990706
3	□	1	O-ring, NBR	9611990096	9611990096
4		1	Cylinder lid		
5	□	1	O-ring, NBR	22340625	22340625
6	□	1	O-ring, NBR	26010467	9611992579
7		1	Upper piston		
8		1	Flange		
9		1	Spring	9612292801	9612315401
10		1	Upper piston rod		
11		1	Pin	9611992562	9611991314
12	□	1	O-ring, NBR	9611992556	9611992580
13		1	Guide ring, Turcite	9612292601	9612292608
14		1	Main piston		
16		1	Cylinder		
17		2	Air fitting	9611992563	9611992563
18		2	Retaining ring	9612292901	9612292902
19		1	Lock ring	9612293001	9612313201
20		1	Circlip	9611992561	9611992589
21		1	Spring	9612292701	9612315501
22		1	Spring support		9612310601
23	□	1	O-ring, NBR	9611992568	9611990643
24		1	Piston		
25		1	Guide ring, Turcite	9612292604	
26	□	1	O-ring, NBR	22340625	9611992582
27		1	Lower piston rod		
28		3	Circlip	9611992565	9611992588
29	□	1	O-ring, NBR	22340431	22340625
31	□	1	O-ring, NBR	26010467	9611992580
32	□	1	O-ring, NBR	22340625	9611992581
33		1	Lower piston		
34		1	Guide ring, Turcite	9612292610	
35		1	Flange		
36	○▲	1	O-ring, NBR	26010467	9611992579
37	○▲	1	O-ring, NBR	22340625	9611992581
38		1	Bonnet		
40		1	Air fitting	9611992564	9611992564
41		1	Guide ring, PTFE	9612292613	9612292612
42	○▲	3	Washer	9611992572	9611992590
43		3	Screw	9611990462	9611991910
44	○▲	1	O-ring, EPDM (Standard)	9611992931	9611992934
45		1	Lock ring	9612298301	9612313601
46		2	Clamp ring		
47a		1	Clip ring	3135307271	
47b		1	Circlip	9611992663	
49		1	Guide ring, PTFE	9612292615	9612292605
50		1	Upper plug, EPDM (Standard)		
		1	Upper plug, NBR		
		1	Upper plug, FPM		
51		1	Lower plug, EPDM (Standard)		
		1	Upper plug, NBR		
		1	Upper plug, FPM		
52		2	Clamp complete	9611311055	9611311057
54	○▲	1	Double lip seal, EPDM (Standard)	9612317501	9612320401
55		1	Guide ring, PTFE	9612292602	9612292606
56		1	Balancing housing (Standard)		
57		1	Balancing cylinder		
58		1	Lower inner spindle		
70		1	Nut	9611992968	9611992967
73	○▲	1	Lip seal, EPDM (Standard)	9612317504	9612320404
		1	Lip seal, NBR	9612317505	9612320405
		1	Lip seal, FPM	9612317506	9612320406

Alternative

			CIP-kit for balancing plug complete, EPDM		
54	○	1	Double lip seal, EPDM (Standard)	9612317501	9612320401
55		1	Guide ring, PTFE	9612292602	9612292606
60	○	1	O-ring for CIP, EPDM	9611992700	9611992571
61		1	Balancing housing for CIP		
62		2	O-ring, EPDM (Period 9603-)	9611993119	9611993119
		2	Washer, Nylon (Period 9501-9603)	9611992566	9611992566
63		2	Flushing tube (Period 9603-)	3135710171	3135710171
		2	Flushing tube (Period 9501-9603)	3135710131	3135710131

Accessories

		1	Tool complete for actuator	9612317401	9612317401

Recommended spare parts: Service kits

Not manufactured anymore

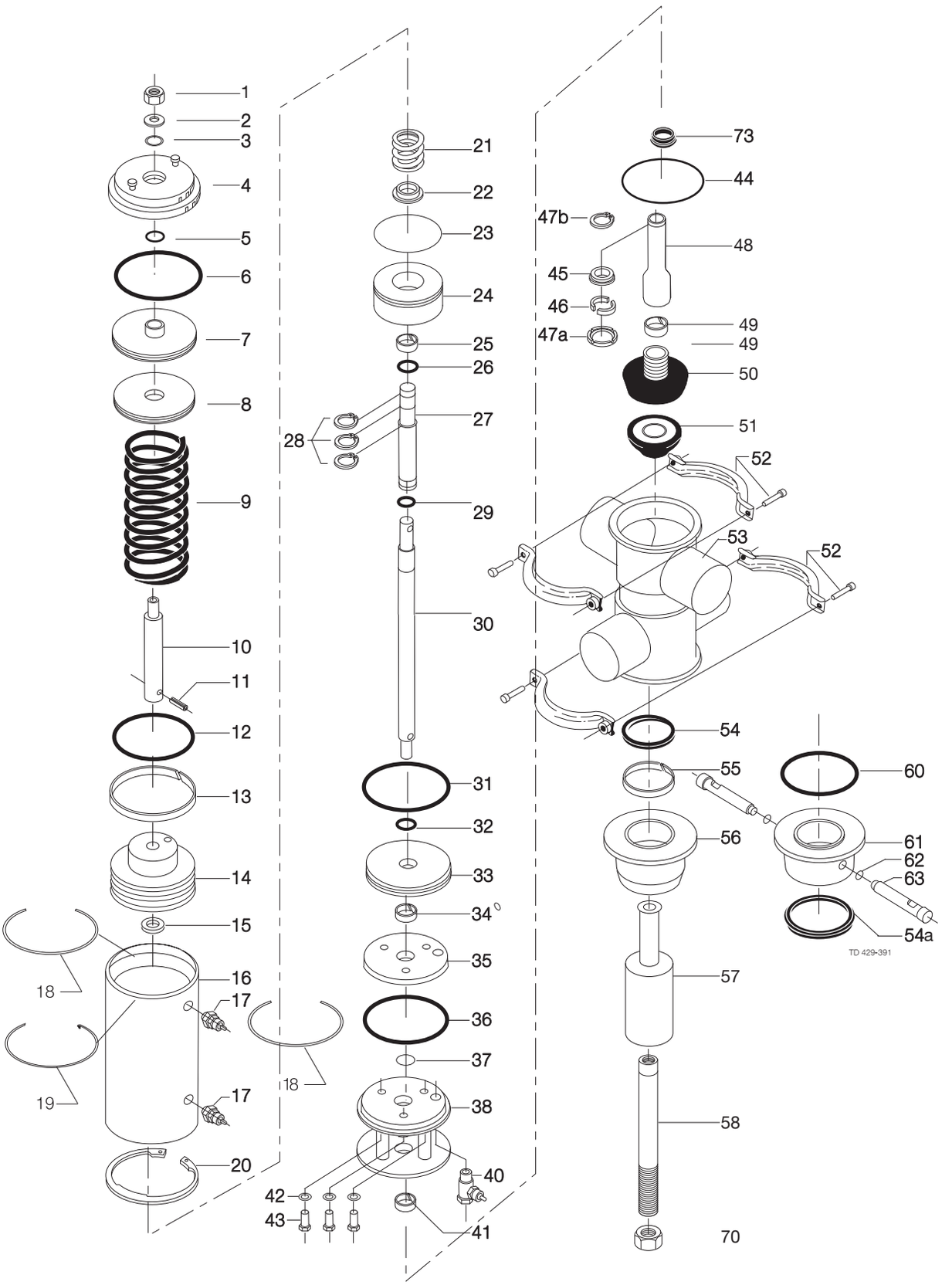

Pos	Qty	Denomination	51mm/DN50	63.5mm/DN65	76mm	DN80	101.6mm/DN100
		Actuator (Pos. 1+44+73)					
30	1	Inner stem					
48	1	Lower stem					

Pos	Qty	Denomination	51 mm	63.5 mm	76 mm	101.6 mm
53	1	Valve body 11-00				
	1	Valve body 12-00				
	1	Valve body 21-00				
	1	Valve body 22-00				
	1	Valve body 11-90				
	1	Valve body 12-90				
	1	Valve body 21-90				
	1	Valve body 22-90				
	1	Valve body 11-180				
	1	Valve body 11-270				

Pos	Qty	Denomination	DN 50	DN 65	DN80	DN100
53	1	Valve body 11-00				
	1	Valve body 12-00				
	1	Valve body 21-00				
	1	Valve body 22-00				
	1	Valve body 11-90				
	1	Valve body 12-90				
	1	Valve body 21-90				
	1	Valve body 22-90				
	1	Valve body 11-180				
	1	Valve body 11-270				

Pos	Qty	Denomination	51-76 mm DN50-65	101.6 mm DN80-100
Service kit A for actuator				
□	1	Service kit A, NBR.	9611920127	9611920130
Service kit B for product wetted parts				
▲	1	Service kit B, EPDM.	9611920224	9611920227
▲	1	Service kit B, NBR.	9611920225	9611920228
▲	1	Service kit B, FPM.	9611920226	9611920229
Service kit C for valve with CIP-connection on balancing housing				
○	1	Service kit C, EPDM.	9611920230	9611920233
○	1	Service kit C, NBR.	9611920231	9611920234
○	1	Service kit C, FPM.	9611920232	9611920235

Parts marked with □○▲ are included in service kit.

Not manufactured anymore

1.6

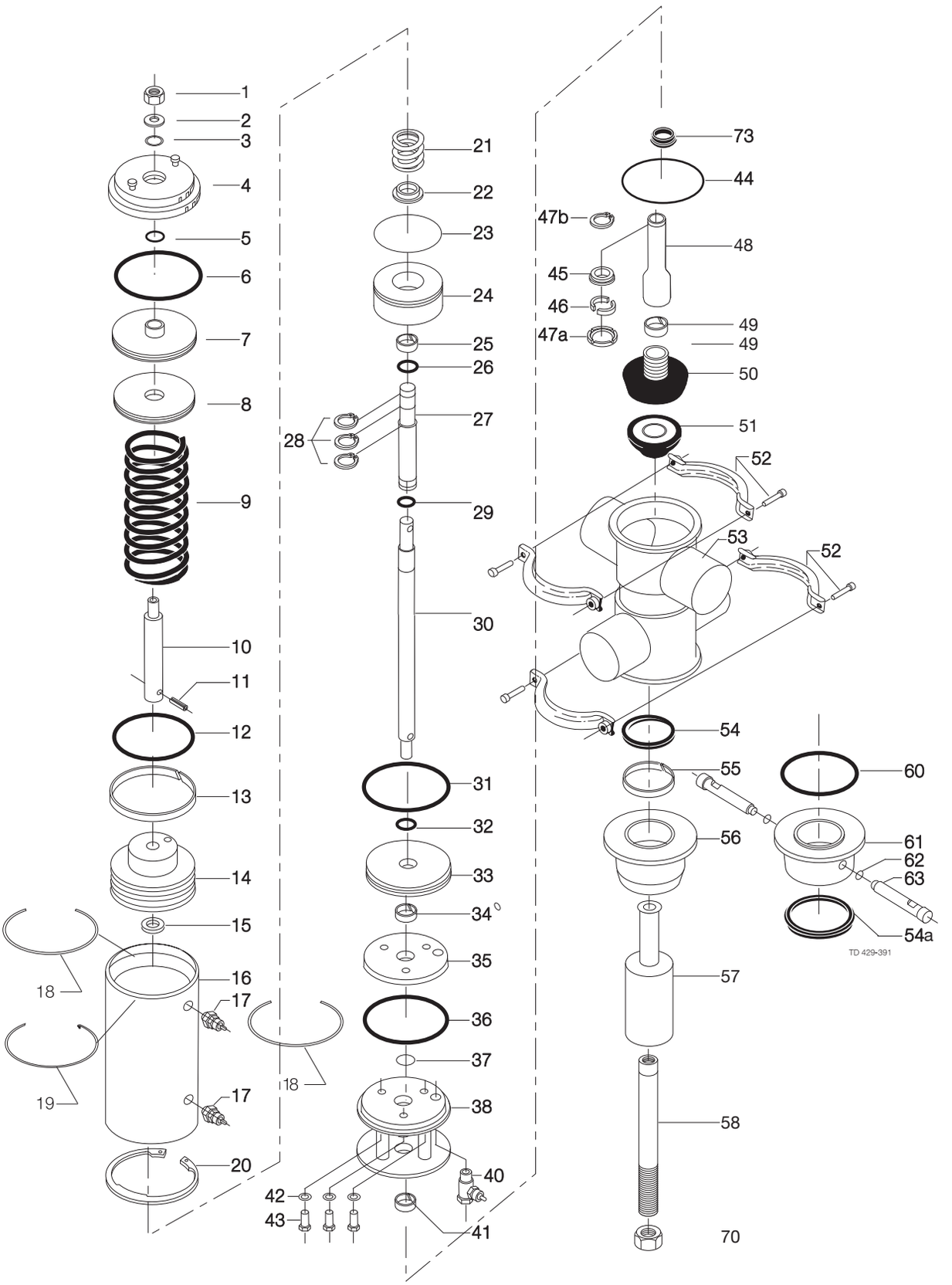

Pos	Qty	Denomination	51 mm	63.5 mm	76 mm	101.6 mm
Surface roughness, inside of valve body: Ra ≤0.8 µm						
53	1	Valve body 11-00				
	1	Valve body 12-00				
	1	Valve body 21-00				
	1	Valve body 22-00				
	1	Valve body 11-90				
	1	Valve body 12-90				
	1	Valve body 21-90				
	1	Valve body 22-90				
	1	Valve body 11-180				
	1	Valve body 11-270				

Pos	Qty	Denomination	DN 50	DN 65	DN 80	DN 100
53	1	Valve body 11-00				
	1	Valve body 12-00				
	1	Valve body 21-00				
	1	Valve body 22-00				
	1	Valve body 11-90				
	1	Valve body 12-90				
	1	Valve body 21-90				
	1	Valve body 22-90				
	1	Valve body 11-180				
	1	Valve body 11-270				

2. (period 9410-9708)

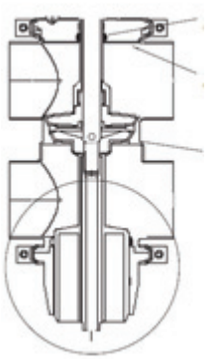

1 double lip seal, not externally visible

No upper valve body distance

Datemark between valve bodies

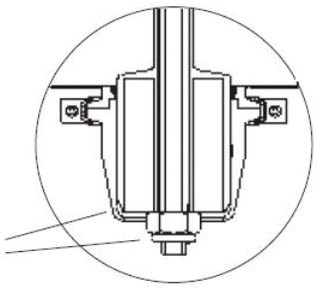

Note
After the October 1994 version the SMP-SC with bonded plug has been altered: the lower valve plug is now secured with a screw and a new balancing housing.

Valve body combinations:

Type 11-00

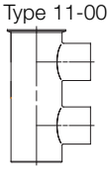

TD 429-019_1

Type 11-90

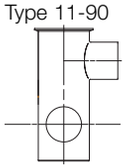

TD 429-019_2

Type 11-180

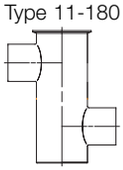

TD 429-019_3

Type 11-270

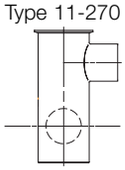

TD 429-019_4

Type 12-00

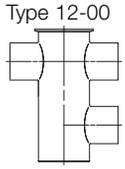

TD 429-019_5

Type 12-90

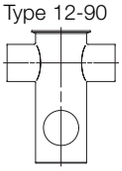

TD 429-019_6

Type 21-00

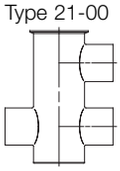

TD 429-019_7

Type 21-90

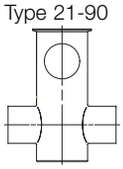

TD 429-019_8

Type 22-00

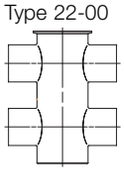

TD 429-019_9

Type 22-90

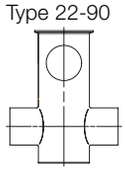

TD 429-019_10

Not manufactured anymore

1.6

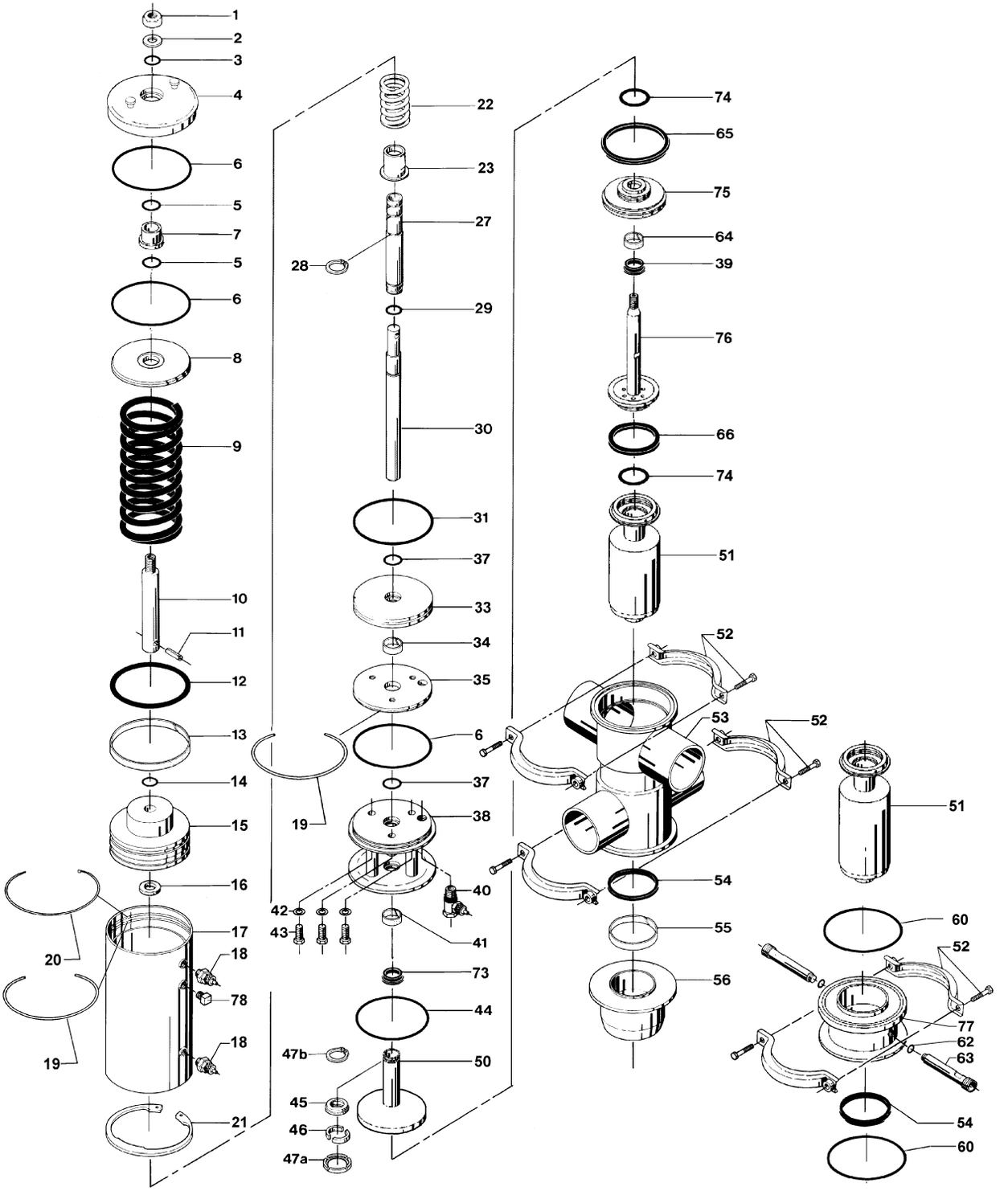

Pos		Qty	Denomination	51-76.1 mm DN50-65	101.6 mm DN80-100
			Actuator complete (Pos. 1-38+40-43+45, 46, 47a/b, 78)		
1		1	Nut	9611992576	9611992576
2		1	Washer	9611990706	9611990706
3	□	1	O-ring, NBR	9611990096	9611990096
4		1	Cylinder lid		
5	□	2	O-ring, NBR	22340625	22340625
6	□	3	O-ring, NBR	26010467	9611992579
7		1	Stopring		
8		1	Upper piston		
9		1	Spring	9612633501	9612315401
10		1	Upper piston rod		
11		1	Pin	9611992562	9611991314
12	□	1	O-ring, NBR	9611992556	9611992580
13		1	Guide ring, Turcite	9612292601	9612292608
14		1	O-ring, NBR	9611991233	9611990049
15		1	Main piston		
17		1	Cylinder		
18		2	Air fitting	9611992563	9611992563
19		2	Retaining ring	9612292901	9612292902
20		1	Lock ring	3135301892	3135301893
21		1	Circlip	9611992561	9611992589
22		1	Spring	9612542201	9612542301
23		1	Spring support		
27		1	Lower piston rod		
28		1	Circlip	9611992565	9611992588
29	□	1	O-ring, NBR	22340431	22340625
30		1	Inner stem		
31	□	1	O-ring, NBR	26010467	9611992580
33		1	Lower piston		
34		1	Guide ring, Turcite		9612292610
35		1	Flange		
37	□	2	O-ring, NBR	22340625	9611992581
38		1	Bonnet		
39		1	Lip seal, EPDM	9612320507	9612316807
		1	Lip seal, NBR	9612320508	9612316808
		1	Lip seal, FPM	9612320509	9612316809
40		1	Air fitting	9611992564	9611992564
41		1	Guide ring, PTFE	9612292613	9612292612
42	□	3	Washer	9611992572	9611992590
43		3	Screw	9611990462	9611991910
44	♦○	1	O-ring, EPDM	9611992931	9611992934
	♦○	1	O-ring, NBR	9611992932	9611992935
	♦○	1	O-ring, FPM	9611992933	9611992936
45		1	Lock ring	9612298301	9612313601
46		1	Clamp ring		
47a		1	Clip ring	3135307271	
47b		1	Circlip		9611992663
52		2	Clamp complete	9611311055	9611311057
54	♦○	1	Lip seal, EPDM	9612317501	9612320401
	♦○	1	Lip seal, NBR	9612317502	9612320402
	♦○	1	Lip seal, FPM	9612317503	
55		1	Guide ring, PTFE	9612292602	9612292606
56		1	Balancing housing		
64		1	Guide ring, PTFE	9612292603	9612292605
65	♦○	1	Seal ring, EPDM	9612359330	9612359333
	♦○	1	Seal ring, NBR	9612359328	9612359331
	♦○	1	Seal ring, FPM	9612359329	9612359332
66	♦○	1	Seal ring, EPDM	9612381406	9612381409
	♦○	1	Seal ring, NBR	9612381404	9612381407
	♦○	1	Seal ring, FPM	9612381405	9612381408
73	♦○	1	Lip seal, EPDM	9612317504	9612320404
	♦○	1	Lip seal, NBR	9612317505	9612320405
	♦○	1	Lip seal, FPM	9612317506	9612320406
74	♦○	2	O-ring, EPDM	9611993310	9611993313
	♦○	2	O-ring, NBR	9611993311	9611993314
	♦○	2	O-ring, FPM	9611993312	9611993315
75		1	Upper plug, lower part		
78		1	Plug		

Not manufactured anymore

1.6

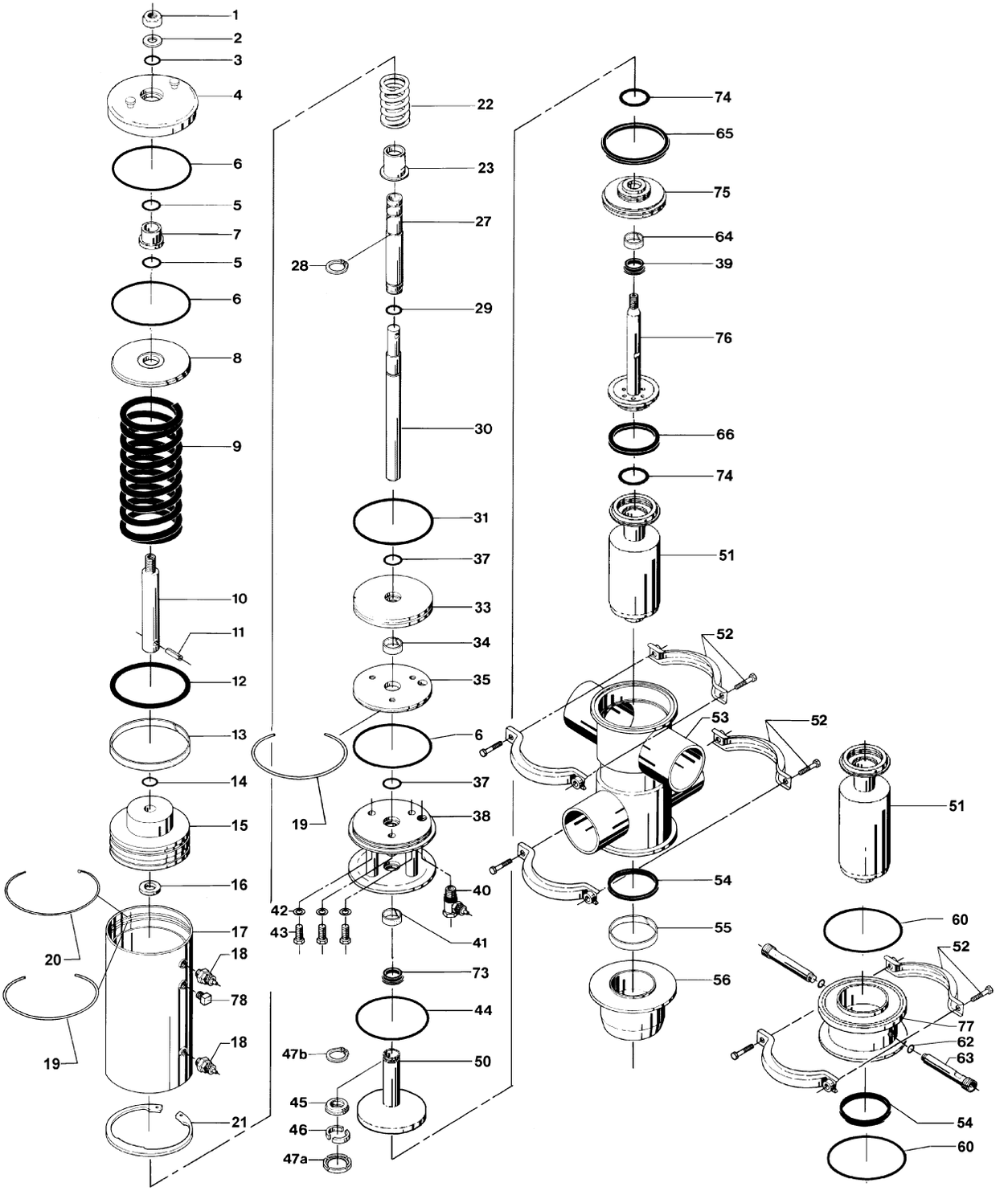

Pos		Qty	Denomination	51-76.1 mm DN50-65	101.6 mm DN80-100
			CIP-kit for balancing plug complete, EPDM		
52		1	Clamp complete	9611311055	9611311057
54	○	1	Lip seal, EPDM (standard)	9612317501	9612320401
60	○	2	O-ring for CIP, EPDM	9611992554	9611992571
62		2	Washer, Nylon	9611992566	9611992566
63		2	Flushing tube	3135710171	3135710171
77		1	Intermediate piece for CIP		
Accessories					
88		1	Tool complete for actuator	9612317401	9612317401

Pos	Qty	Denomination	51 mm DN50	63.5 mm DN65	76.1 mm	DN80	101.6 mm DN100
50	1	Upper plug, upper part					
51	1	Lower plug, lower part					
76	1	Lower plug, upper part					
	1	Upper plug, upper part					
	1	Upper plug, upper part					
	1	Upper plug, upper part					
	1	Upper plug, upper part					
	1	Upper plug, upper part					
	1	Upper plug, upper part					

Pos	Qty	Denomination	51 mm	63.5 mm	76.1 mm	101.6 mm
53	1	Valve body 11-00				
	1	Valve body 12-00				
	1	Valve body 21-00				
	1	Valve body 22-00				
	1	Valve body 11-90				
	1	Valve body 12-90				
	1	Valve body 21-90				
	1	Valve body 22-90				
	1	Valve body 11-180				
	1	Valve body 11-270				

Pos	Qty	Denomination	DN 50	DN 65	DN80	DN100
53	1	Valve body 11-00				
	1	Valve body 12-00				
	1	Valve body 21-00				
	1	Valve body 22-00				
	1	Valve body 11-90				
	1	Valve body 12-90				
	1	Valve body 21-90				
	1	Valve body 22-90				
	1	Valve body 11-180				
	1	Valve body 11-270				

Valve body combinations:

Type 11-00

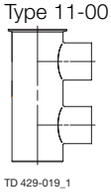

TD 429-019_1

Type 11-90

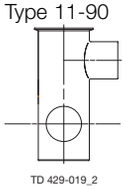

TD 429-019_2

Type 11-180

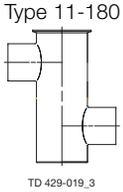

TD 429-019_3

Type 11- 270

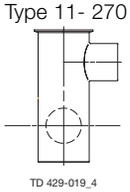

TD 429-019_4

Type 12-00

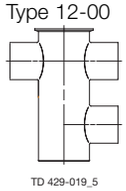

TD 429-019_5

Type 12-90

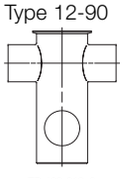

TD 429-019_6

Type 21-00

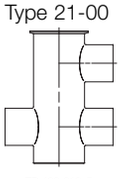

TD 429-019_7

Type 21-90

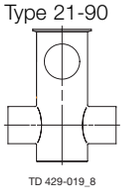

TD 429-019_8

Type 22-00

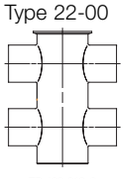

TD 429-019_9

Type 22-90

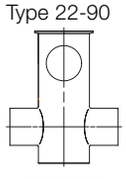

TD 429-019_10

Not manufactured anymore

1.6

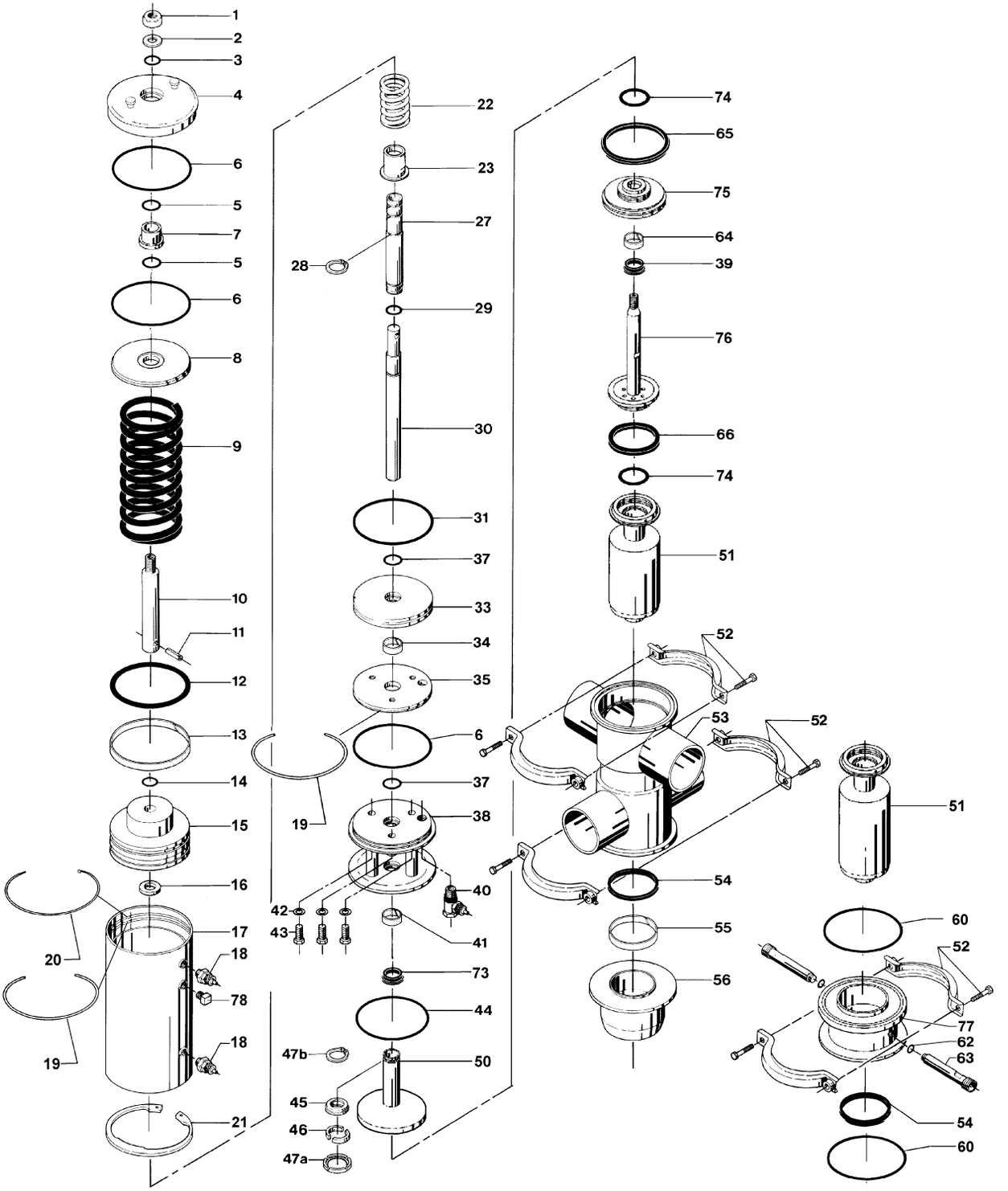

Pos	Qty	Denomination	51 mm	63.5 mm	76 mm	101.6 mm
Surface roughness, inside of valve body: Ra ≤0.8 µm						
53	1	Valve body 11-00				
	1	Valve body 12-00				
	1	Valve body 21-00				
	1	Valve body 22-00				
	1	Valve body 11-90				
	1	Valve body 12-90				
	1	Valve body 21-90				
	1	Valve body 22-90				
	1	Valve body 11-180				

Pos	Qty	Denomination	DN50	DN65	DN80	DN100
Surface roughness, inside of valve body: Ra ≤0.8 µm						
53	1	Valve body 11-00				
	1	Valve body 12-00				
	1	Valve body 21-00				
	1	Valve body 22-00				
	1	Valve body 11-90				
	1	Valve body 12-90				
	1	Valve body 21-90				
	1	Valve body 22-90				
	1	Valve body 11-180				
	1	Valve body 11-270				

Valve body combinations:

Type 11-00

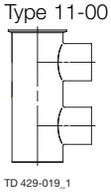

TD 429-019_1

Type 11-90

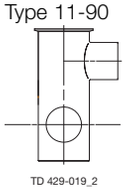

TD 429-019_2

Type 11-180

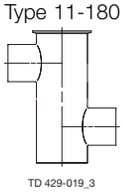

TD 429-019_3

Type 11- 270

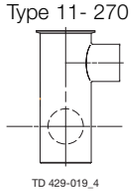

TD 429-019_4

Type 12-00

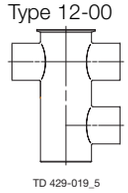

TD 429-019_5

Type 12-90

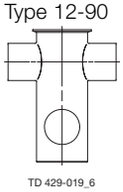

TD 429-019_6

Type 21-00

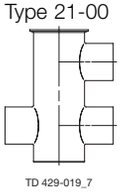

TD 429-019_7

Type 21-90

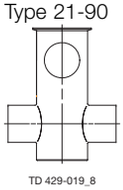

TD 429-019_8

Type 22-00

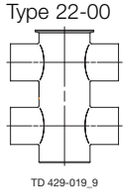

TD 429-019_9

Type 22-90

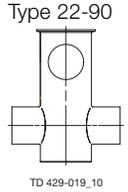

TD 429-019_10

Pos	Qty	Denomination	51-76 mm NW 50-65	101.6 mm NW 80-100
Service kit for actuator				
□		Service kit A, NBR	9611920499	9611920500
Service kit for product wetted parts				
○		Service kit B, EPDM	9611920501	9611920504
○		Service kit B, NBR	9611920502	9611920505
○		Service kit B, FPM	9611920503	9611920506
Service kit for valve with CIP-connection on balancing housing				
◆		Service kit C, EPDM	9611920507	9611920510
◆		Service kit C, NBR	9611920508	9611920511
◆		Service kit C, FPM	9611920509	9611920512

Recommended Spare Parts: Service kit.

Not manufactured anymore

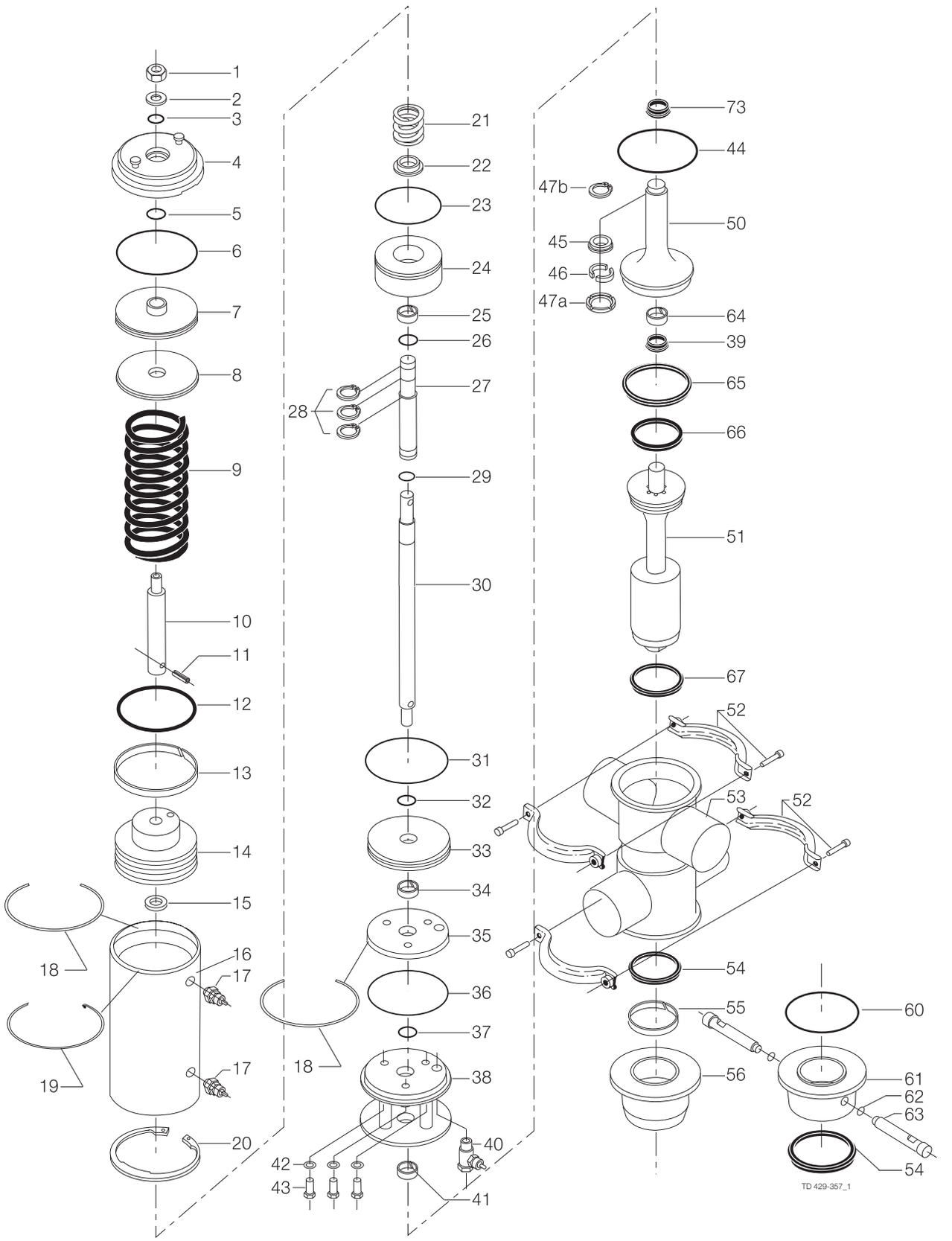

Pos		Qty	Denomination	51-76 mm DN50-65	101.6 mm DN80-100
1		1	Nut	9611992576	9611992576
2		1	Washer	9611990706	9611990706
3	□	1	O-ring, NBR	9611990096	9611990096
4		1	Cylinder lid		
5	□	1	O-ring, NBR	22340625	22340625
6	□	1	O-ring, NBR	26010467	9611992579
7		1	Upper piston		
8		1	Flange		
9		1	Spring	9612292801	9612315401
10		1	Upper piston rod		
11		1	Pin	9611992562	9611991314
12	□	1	O-ring, NBR	9611992556	9611992580
13		1	Guide ring, Turcite	9612292601	9612292608
14		1	Main piston		
15		1	Support washer		
16		1	Cylinder		
17		2	Air fitting	9611992563	9611992563
18		2	Retaining ring	9612292901	9612292902
19		1	Lock ring	9612293001	9612313201
20		1	Circlip	9611992561	9611992589
21		1	Spring	9612292701	9612315501
22		1	Spring support		9612310601
23	□	1	O-ring, NBR	9611992568	9611990643
24		1	Piston		
25		1	Guide ring, Turcite	9612292604	
26	□	1	O-ring, NBR	22340625	9611992582
27		1	Lower piston rod		
28		3	Circlip	9611992565	9611992588
29	□	1	O-ring, NBR	22340431	22340625
31	□	1	O-ring, NBR	26010467	9611992580
32	□	1	O-ring, NBR	22340625	9611992581
33		1	Lower piston		
34		1	Guide ring, Turcite	9612292610	
35		1	Flange	9612291501	9612312001
36	○▲	1	O-ring, NBR	26010467	9611992579
37	○▲	1	O-ring, NBR	22340625	9611992581
38		1	Bonnet		
39	○▲	1	Lip seal, EPDM (Standard)	9612320501	9612316801
	○▲	1	Lip seal, NBR	9612320502	9612316802
	○▲	1	Lip seal, FPM	9612320503	9612316803
40		1	Air fitting	9611992564	9611992564
41		1	Guide ring, PTFE	9612292611	9612292612
42	○▲	3	Washer	9611992572	9611992590
43		3	Screw	9611990462	9611991910
44	○▲	1	O-ring, EPDM (Standard)	9611992931	9611992934
	○▲	1	O-ring, NBR	9611992932	9611992935
	○▲	1	O-ring, FPM	9611992933	9611992936
45		1	Lock ring	9612298301	9612313601
46		2	Clamp ring		
47a		1	Clip ring	3135307271	
47b		1	Circlip	9611992663	
51		1	Lower plug		
		1	Lower plug, EPDM (Pos.51+67)		
		1	Lower plug, NBR (Pos.51+67)		
		1	Lower plug, FPM (Pos.51+67)		
52		2	Clamp complete	9611311055	9611311057
54	○▲	1	Double lip seal, EPDM (Standard)	9612317501	9612320401
	○▲	1	Double lip seal, NBR	9612317502	9612320402
	○▲	1	Double lip seal, FPM	9612317503	
55		1	Guide ring, PTFE	9612292602	9612292606
56		1	Balancing housing (Standard)		
64		1	Guide ring	9612292613	9612292612
65	○▲	1	Seal ring, EPDM, (Standard)	9612359303	9612359309
65	○▲	1	Seal ring, NBR	9612359301	9612359307
	○▲	1	Seal ring, FPM	9612359302	9612359308
66	○▲	1	Seal ring, EPDM, (Standard)	9612359406	9612359403
	○▲	1	Seal ring, NBR	9612359404	9612359401
	○▲	1	Seal ring, FPM	9612359405	9612359402
67	○▲	1	Seal ring, EPDM (Standard)	9612359306	9612359312
	○▲	1	Seal ring, NBR	9612359304	9612359310
	○▲	1	Seal ring, FPM	9612359305	9612359311
73	○▲	1	Lip seal, EPDM (Standard)	9612317504	9612320404
	○▲	1	Lip seal, NBR	9612317505	9612320405
	○▲	1	Lip seal, FPM	9612317506	9612320406

Not manufactured anymore

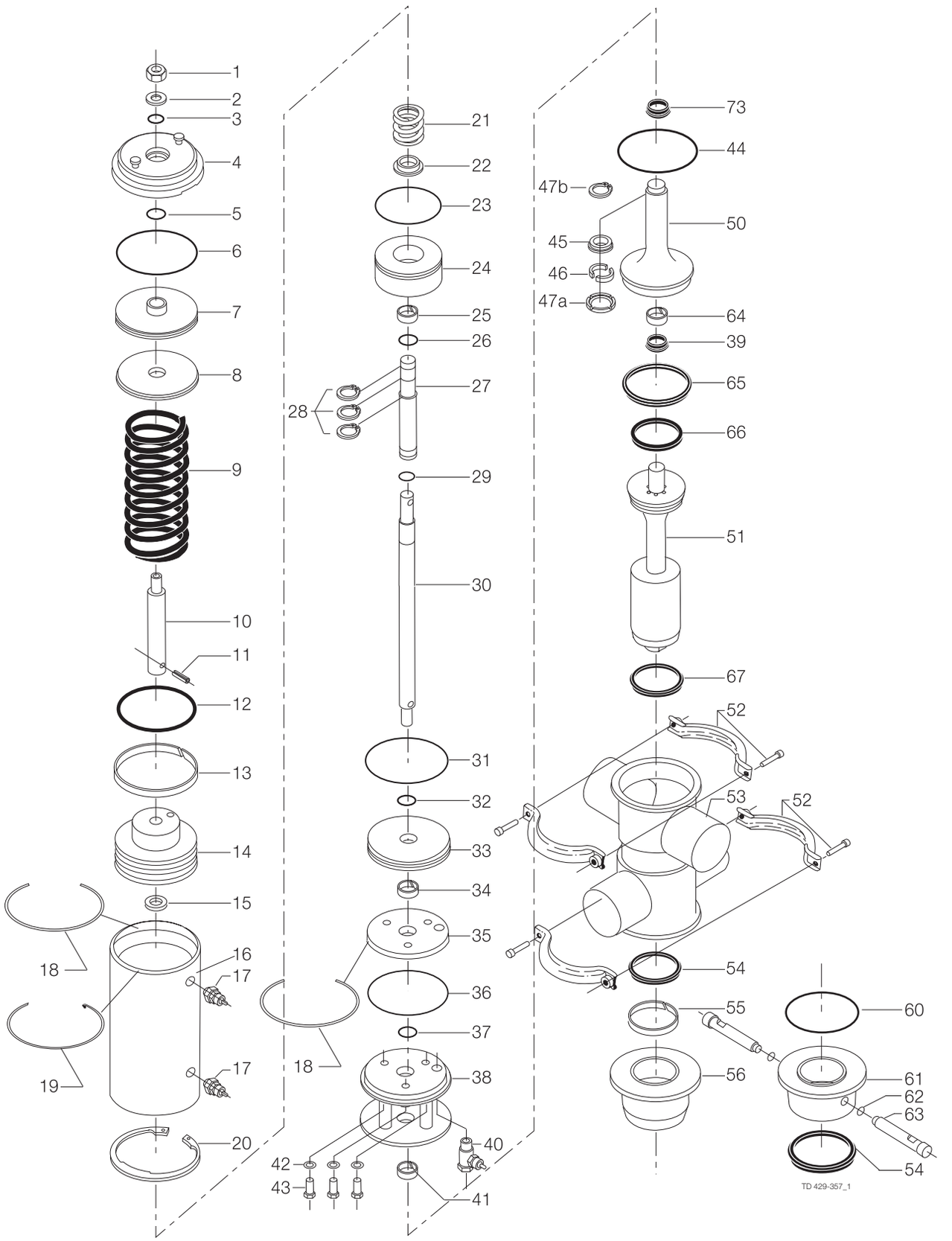

Pos		Qty	Denomination	51-76 mm DN50-65	101.6 mm DN80-100
			CIP-kit for balancing plug complete, EPDM		
54	○	1	Double lip seal, EPDM (Standard)	9612317501	9612320401
55		1	Guide ring, PTFE	9612292602	9612292606
60	○	1	O-ring for CIP, EPDM	9611992700	9611992571
61		1	Balancing housing for CIP		
62		2	O-ring, EPDM (Period 9603-)	9611993119	9611993119
62		2	Washer, Nylon (Period 9410-9603)	9611992566	9611992566
63		2	Flushing tube (Period 9603-)	3135710171	3135710171
		2	Flushing tube (Period 9410-9603)	3135710131	3135710131
Accessories					
		1	Tool complete for actuator	9612317401	9612317401

Pos	Qty	Denomination	51mm DN50	63.5mmn DN65	76mm	DN80	101.6mm DN100
		Actuator complete (Pos. 1-44, 73)					
30	1	Inner stem					
50	1	Upper plug					
	1	Upper plug, EPDM (Pos.39+50+64+65+66)					
	1	Upper plug, NBR (Pos.39+50+64+65+66)					
	1	Upper plug, FPM (Pos.39+50+64+65+66)					

Pos		Qty	Denomination	51-76 mm DN50-65	101.6 mm DN80-100
Service kit for actuator					
1	□	1	Service kit A, NBR	9611920127	9611920130
Service kit for product wetted parts					
	▲	1	Service kit B, EPDM	9611920238	9611920241
	▲	1	Service kit B, NBR	9611920239	9611920242
	▲	1	Service kit B, FPM	9611920240	9611920243
Service kit for valve with CIP-connection on balancing housing					
	○	1	Service kit C, EPDM	9611920244	9611920247
	○	1	Service kit C, NBR	9611920245	9611920248
	○	1	Service kit C, FPM	9611920246	9611920249

Parts marked with □○▲ are included service kit.

Pos	Qty	Denomination
Rebuilding kit from bonded to seal ring plug		
		51 mm/NW50
		63.5 mm/NW65
		76 mm
		NW80
		101.6 mm/NW100

2. (Period 9410 - 9708)

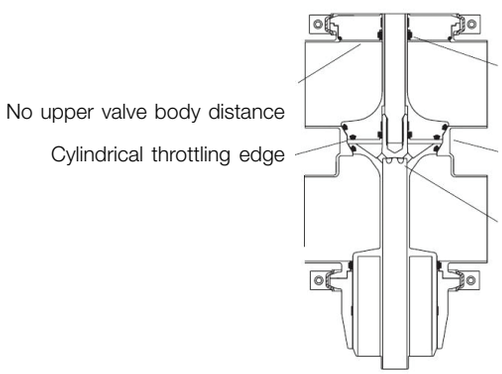

1 double lip seal, not externally visible

Datemark between valve bodies

6 leakage holes

Not manufactured anymore

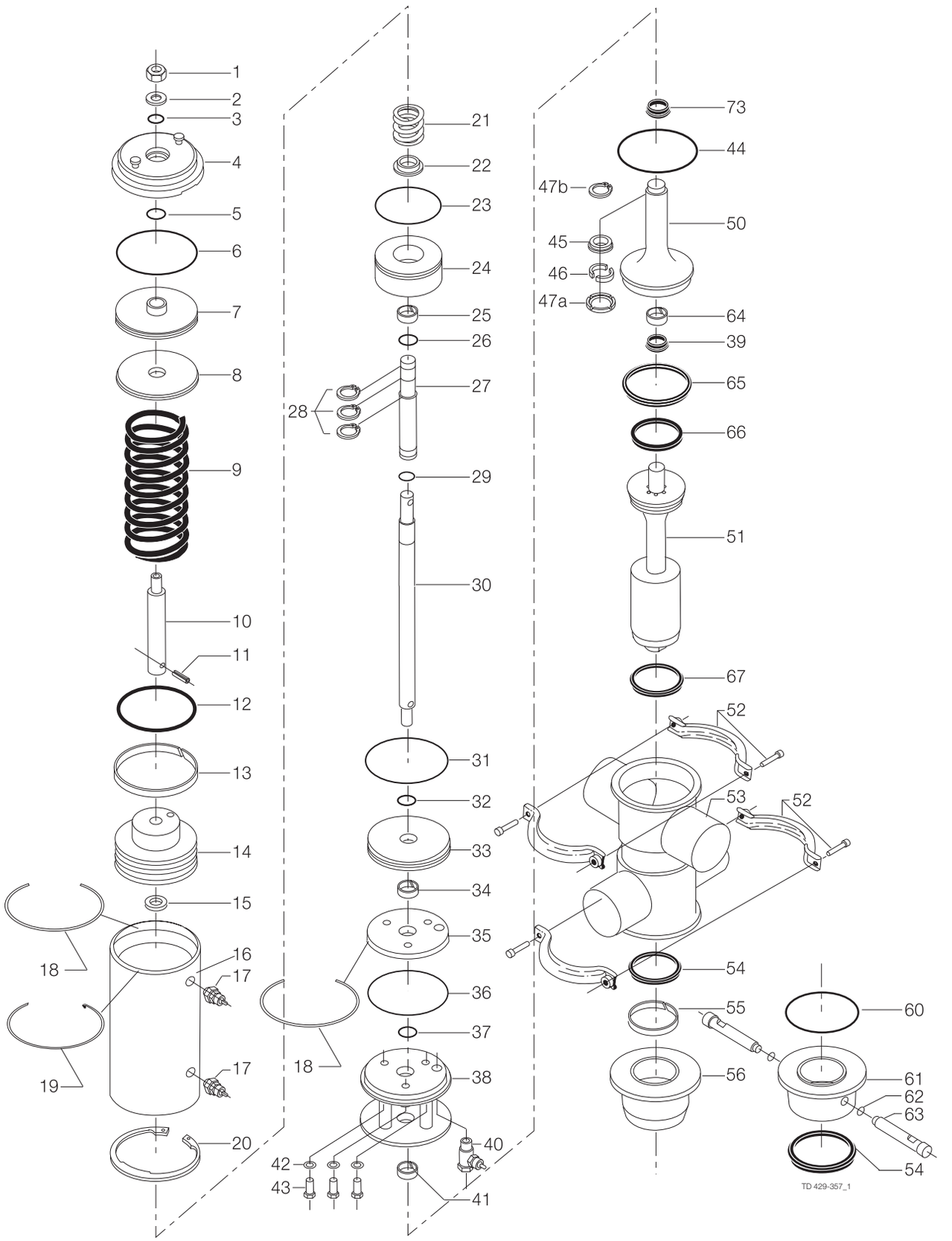

Pos	Qty	Denomination	51 mm	63.5 mm	76 mm	101.6 mm
53	1	Valve body 11-00				
	1	Valve body 12-00				
	1	Valve body 21-00				
	1	Valve body 22-00				
	1	Valve body 11-90				
	1	Valve body 12-90				
	1	Valve body 21-90				
	1	Valve body 22-90				
	1	Valve body 11-180				
	1	Valve body 11-270				

Pos	Qty	Denomination	DN50	DN65	DN80	DN100
53	1	Valve body 11-00				
	1	Valve body 12-00				
	1	Valve body 21-00				
	1	Valve body 22-00				
	1	Valve body 11-90				
	1	Valve body 12-90				
	1	Valve body 21-90				
	1	Valve body 22-90				
	1	Valve body 11-180				
	1	Valve body 11-270				

Pos	Qty	Denomination	51 mm	63.5 mm	76 mm	101.6 mm
Surface roughness, inside of valve body: Ra ≤0.8 µm						
53	1	Valve body 11-00				
	1	Valve body 12-00				
	1	Valve body 21-00				
	1	Valve body 22-00				
	1	Valve body 11-90				
	1	Valve body 12-90				
	1	Valve body 21-90				
	1	Valve body 22-90				
	1	Valve body 11-180				
	1	Valve body 11-270				

Pos	Qty	Denomination	DN 50	DN 65	DN80	DN100
Surface roughness, inside of valve body: Ra ≤0.8 µm						
53	1	Valve body 11-00				
	1	Valve body 12-00				
	1	Valve body 21-00				
	1	Valve body 22-00				
	1	Valve body 11-90				
	1	Valve body 12-90				
	1	Valve body 21-90				
	1	Valve body 22-90				
	1	Valve body 11-180				
	1	Valve body 11-270				

Valve body combination:

Type 11-00

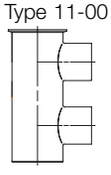

TD 429-019_1

Type 11-90

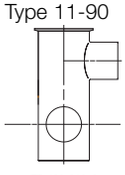

TD 429-019_2

Type 11-180

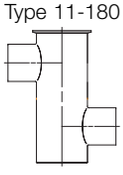

TD 429-019_3

Type 11-270

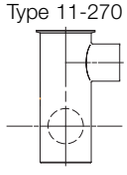

TD 429-019_4

Type 12-00

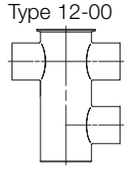

TD 429-019_5

Type 12-90

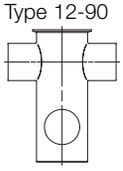

TD 429-019_6

Type 21-00

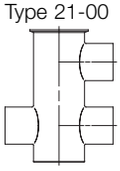

TD 429-019_7

Type 21-90

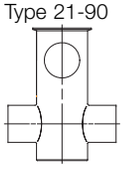

TD 429-019_8

Type 22-00

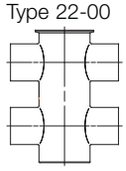

TD 429-019_9

Type 22-90

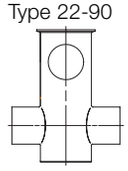

TD 429-019_10

Recommended spare parts: Service kits.

Not manufactured anymore

1.6

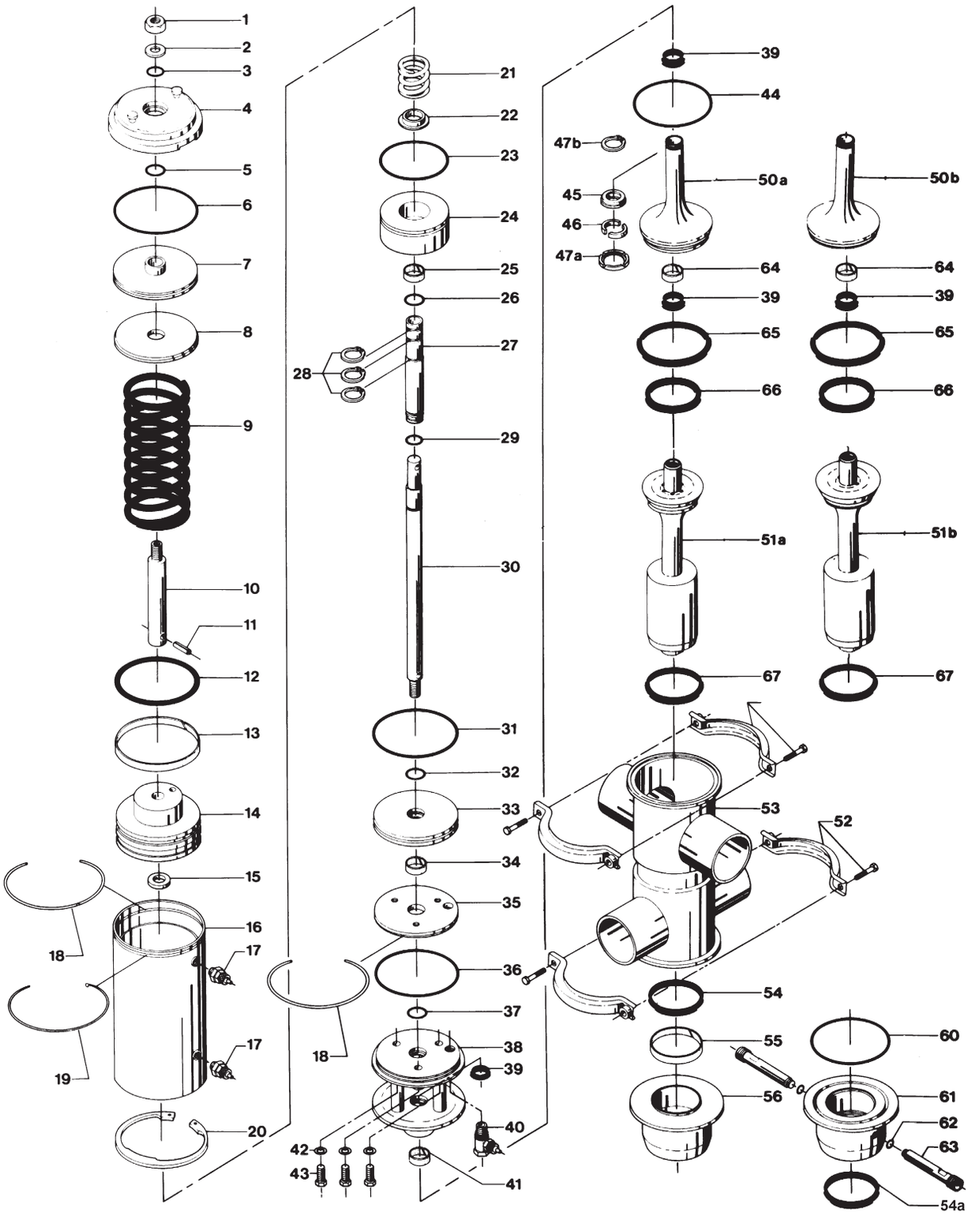

Pos		Qty	Denomination	51-76 mm DN50-65	101.6 mm DN80-100
1		1	Nut	9611992576	9611992576
2		1	Washer	22310135	22310135
3	□	1	O-ring, NBR	9611990096	9611990096
4		1	Cylinder lid	9612291601	9612312101
5	□	1	O-ring, NBR	22340625	22340625
6	□	1	O-ring, NBR	26010467	9611992579
7		1	Upper piston		
8		1	Flange	9612291401	9612310201
9		1	Spring	9612292801	9612315401
10		1	Upper piston rod		
11		1	Pin	9611992562	9611991314
12	□	1	O-ring, NBR	9611992556	9611992580
13		1	Guide ring, Turcite	9612292601	9612292608
14		1	Main piston		
15		1	Support washer		
16		1	Cylinder		
17		2	Air fitting	9611992563	9611992563
18		2	Retaining ring	9612292901	9612292902
19		1	Lock ring	9612293001	9612313201
20		1	Circlip	9611992561	9611992589
21		1	Spring	9612292701	9612315501
22		1	Spring support		9612310601
23	□	1	O-ring, NBR	9611992568	9611990643
24		1	Piston		
25		1	Guide ring, Turcite	9612292604	
26	□	1	O-ring, NBR	22340625	9611992582
27		1	Lower piston rod		
28		3	Circlip	9611992565	9611992588
29	□	1	O-ring, NBR	22340431	22340625
30	♦■	1	Inner stem		
31	□	1	O-ring, NBR	26010467	9611992580
32	□	1	O-ring, NBR	22340625	9611992581
33		1	Lower piston		
34		1	Guide ring, Turcite	9612292610	
35		1	Flange		
36	○▲	1	O-ring, NBR	26010467	9611992579
37	○▲	1	O-ring, NBR	22340625	9611992581
38		1	Bonnet		
39	○▲	3	Lip seal, EPDM (Standard)	9612320501	9612316802
	○▲	3	Lip seal, NBR	9612320502	9612316802
	○▲	3	Lip seal, FPM	9612316803	9612316803
40	○▲	1	Air fitting	9611992564	9611992564
41		1	Guide ring, PTFE	9612292607	9612292609
42	♦○▲■	3	Washer	9611992572	9611992590
43		3	Screw	9611990462	9611991910
44	○▲	1	O-ring, EPDM (Standard)	9611992700	9611992702
	○▲	1	O-ring, NBR	9611992700	9611992702
	○▲	1	O-ring, FPM	9611992700	9611992702
45		1	Lock ring	9612298301	9612313601
46		2	Clamp ring		
47a		1	Clip ring	3135307271	
47b		1	Circlip	9611992663	
50a		1	Upper plug		
50a		1	Upper plug, EPDM (Pos.39+50a+64+65+66)		
		1	Upper plug, NBR (Pos.39+50a+64+65+66)		
		1	Upper plug, FPM (Pos.39+50a+64+65+66)		
51a		1	Lower plug		
51a		1	Lower plug, EPDM (Pos.51a+71)		
		1	Lower plug, NBR (Pos.51a+71)		
		1	Lower plug, FPM (Pos.51a+71)		
52		2	Clamp complete	9611311055	9611311057
54	○▲	1	Double lip seal, EPDM (Standard)	9612317501	9612320401
	○▲	1	Double lip seal, NBR	9612317502	9612320402
	○▲	1	Double lip seal, FPM	9612317503	
55		1	Guide ring, PTFE	9612292602	9612292606
56		1	Balancing housing (Standard)		
64		1	Guide ring	9612292611	9612292612
65	○▲	1	Seal ring, EPDM, (Standard)	9612359303	9612359309
65	○▲	1	Seal ring, NBR	9612359301	9612359307
	○▲	1	Seal ring, FPM	9612359302	9612359308
66	○▲	1	Seal ring, EPDM, (Standard)	9612359406	9612359403
	○▲	1	Seal ring, NBR	9612359404	9612359401
	○▲	1	Seal ring, FPM	9612359405	9612359402
67	○▲	1	Seal ring, EPDM (Standard)	9612359306	9612359312
	○▲	1	Seal ring, NBR	9612359304	9612359310
	○▲	1	Seal ring, FPM	9612359305	9612359311
Accessories					
		1	Tool complete for actuator	9612317401	9612317401

Not manufactured anymore

1.6

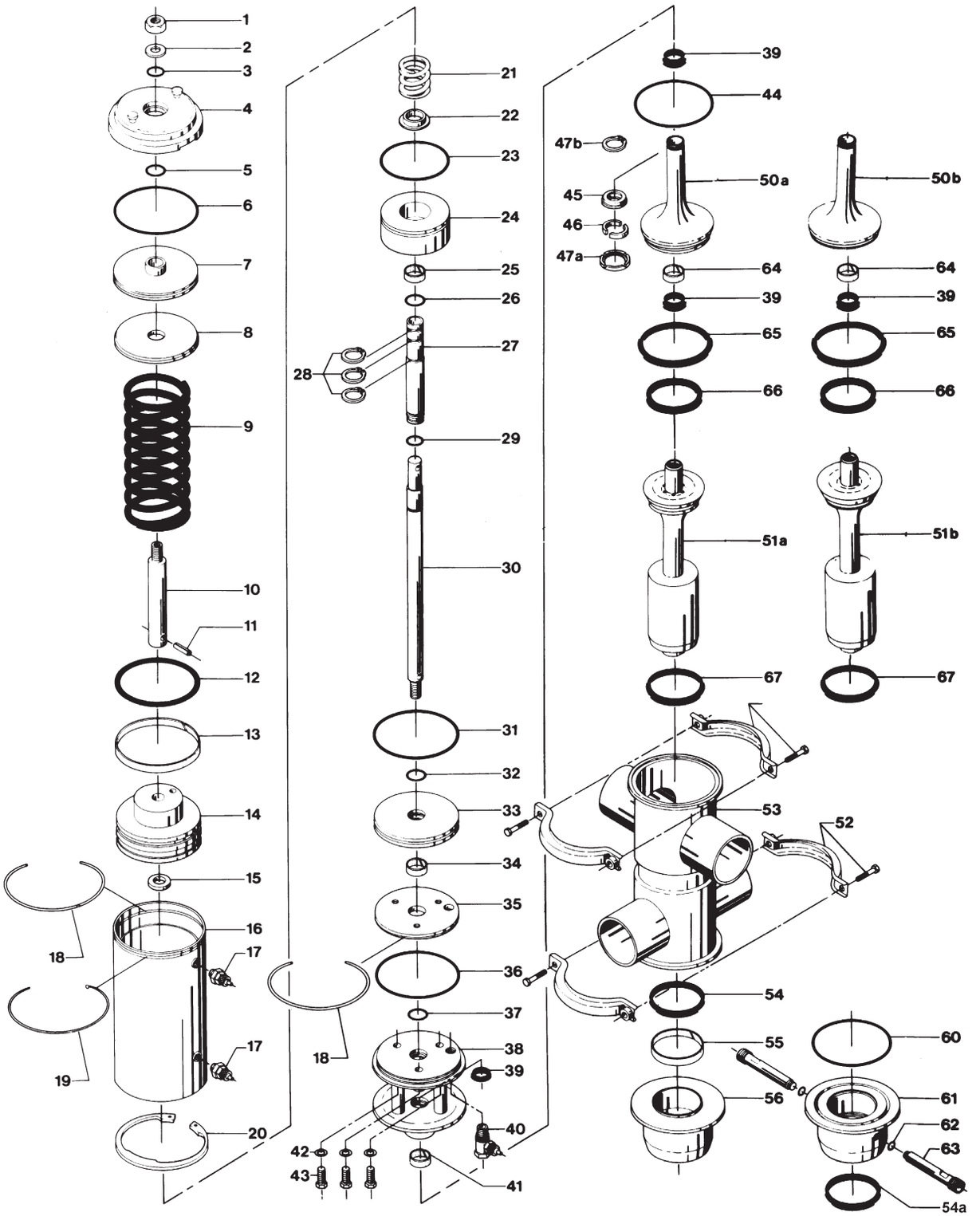

Pos		Qty	Denomination	51-76 mm DN50-65	101.6 mm DN80-100
Seal Ring Plugs for valves with valve bodies without date mark (Up to 9310)					
50b		1	Upper plug		
50b	♦	1	Upper plug, EPDM (Pos.39+50b+64+65+66)		
		1	Upper plug, NBR (Pos.39+50b+64+65+66)		
		1	Upper plug, FPM (Pos.39+50b+64+65+66)		
51b		1	Lower plug		
	♦	1	Lower plug, EPDM (Pos. 51b+67)		
		1	Lower plug, NBR (Pos. 51b + 67)		
		1	Lower plug, FPM (Pos. 51b + 67)		
			CIP-kit for balancing plug complete, EPDM		
54	○	1	Double lip seal, EPDM (Standard)	9612317501	9612320401
55		1	Guide ring, PTFE	9612292602	9612292606
60	○	1	O-ring for CIP, EPDM	9611992700	9611992702
61		1	Balancing housing for CIP		
62		2	Washer, Nylon	9611992566	9611992566
63		2	Flushing tube	3135710131	3135710131
Rebuilding kit from bonded plug to seal ring plug (up to 9310)					
	♦		EPDM		
	♦		NBR		
	♦		FPM		
Rebuilding kit from bonded plug to seal ring plug for date marked bodies					
	■		EPDM		
	■		NBR		
	■		FPM		

Pos	Qty	Denomination	51 mm	63.5 mm	76 mm	101.6 mm
53	1	Valve body, 11-00				
	1	Valve body 12-00				
	1	Valve body 21-00				
	1	Valve body 22-00				
	1	Valve body 11-90				
	1	Valve body 12-90				
	1	Valve body 21-90				
	1	Valve body 22-90				
	1	Valve body 11-180				
	1	Valve body 11-270				

Pos	Qty	Denomination	DN 50	DN 65	DN80	DN100
53	1	Valve body, 11-00				
	1	Valve body 12-00				
	1	Valve body 21-00				
	1	Valve body 22-00				
	1	Valve body 11-90				
	1	Valve body 12-90				
	1	Valve body 21-90				
	1	Valve body 22-90				
	1	Valve body 11-180				
	1	Valve body 11-270				

Valve body combination:

Type 11-00

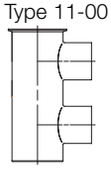

TD 429-019_1

Type 11-90

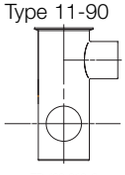

TD 429-019_2

Type 11-180

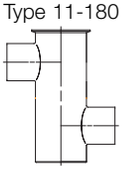

TD 429-019_3

Type 11-270

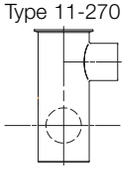

TD 429-019_4

Type 12-00

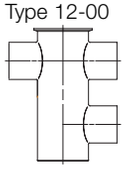

TD 429-019_5

Type 12-90

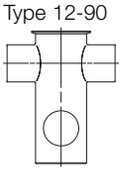

TD 429-019_6

Type 21-00

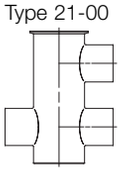

TD 429-019_7

Type 21-90

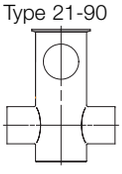

TD 429-019_8

Type 22-00

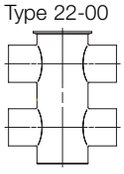

TD 429-019_9

Type 22-90

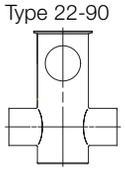

TD 429-019_10

Recommended spare parts: Service kits.

	51-76 mm DN50-65	101.6 mm DN80-100
Service kit for actuator		
Service kit A, NBR	9611920127	9611920130
Service kit for product wetted parts		
Service kit B, EPDM	9611920200	9611920203

Parts marked with □♦○▲■ are included in Service kit.

Not manufactured anymore

1.6

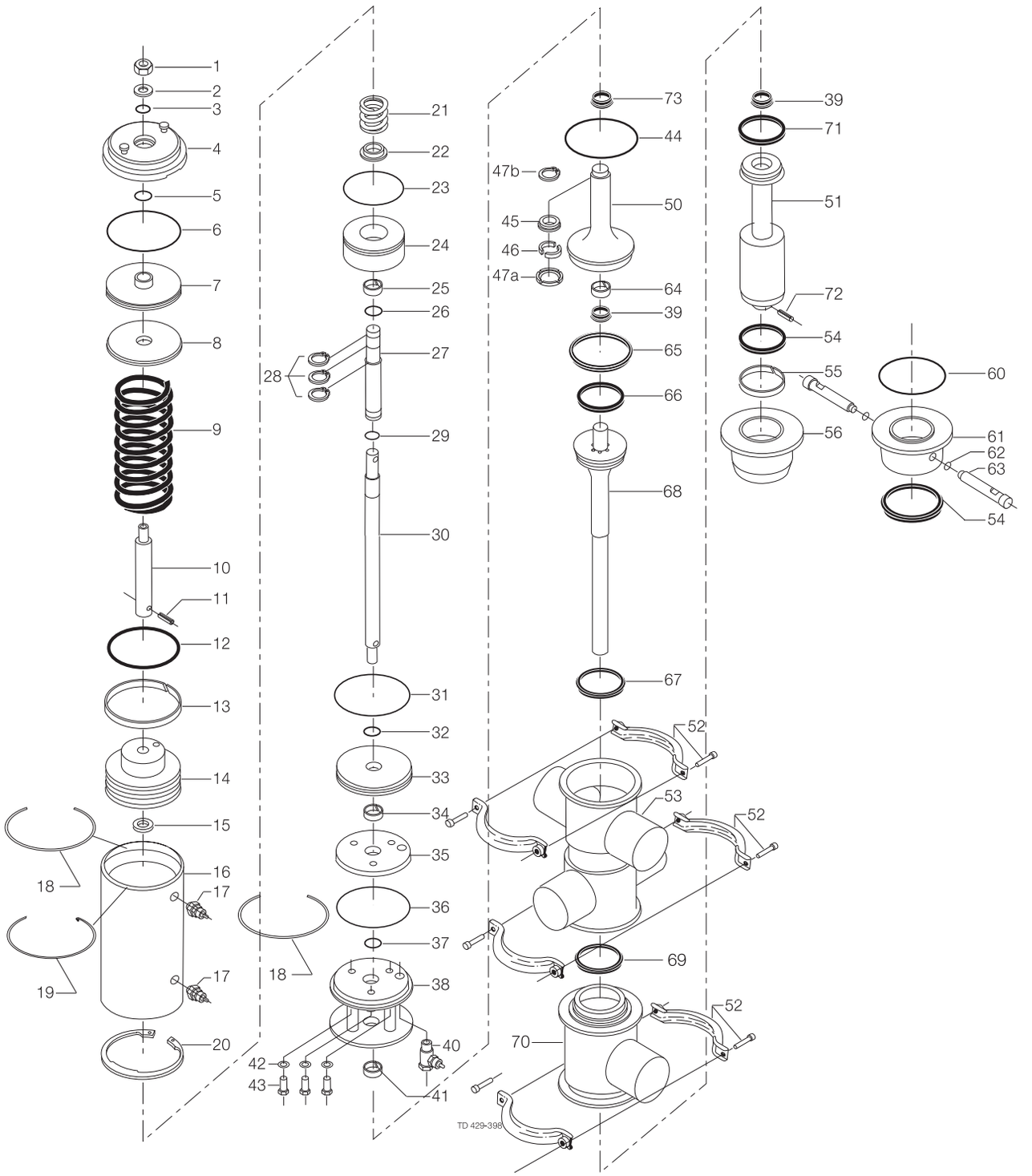

Pos		Qty	Denomination	51-76 mm DN50-65	101.6 mm DN80-100
1		1	Nut	9611992576	9611992576
2		1	Washer	22310135	22310135
3	□	1	O-ring, NBR	9611990096	9611990096
4		1	Cylinder lid		
5	□	1	O-ring, NBR	22340625	22340625
6	□	1	O-ring, NBR	26010467	9611992579
7		1	Upper piston		
8		1	Flange		
9		1	Spring	9612292801	9612315401
10		1	Upper piston rod		
11		1	Pin	9611992562	9611991314
12	□	1	O-ring, NBR	9611992556	9611992580
13		1	Guide ring, Turcite	9612292601	9612292608
14		1	Main piston		
15		1	Support washer		
16		1	Cylinder		
17		2	Air fitting	9611992563	9611992563
18		2	Retaining ring	9612292901	9612292902
19		1	Lock ring	9612293001	9612313201
20		1	Circlip	9611992561	9611992589
21		1	Spring	9612292701	9612315501
22		1	Spring support		9612310601
23	□	1	O-ring, NBR	9611992568	9611990643
24		1	Piston		
25		1	Guide ring, Turcite	9612292604	
26	□	1	O-ring, NBR	22340625	9611992582
27		1	Lower piston rod		
28		3	Circlip	9611992565	9611992588
29	□	1	O-ring, NBR	22340431	22340625
30		1	Inner stem		
31	□	1	O-ring, NBR	26010467	9611992580
32	□	1	O-ring, NBR	22340625	9611992581
33		1	Lower piston		
34		1	Guide ring, Turcite	9612292610	
35		1	Flange	9612291501	9612312001
36	○▲	1	O-ring, NBR	26010467	9611992579
37	○▲	1	O-ring, NBR	22340625	9611992581
38		1	Bonnet		
39	○▲	4	Lip seal, EPDM (Standard)	9612320501	9612316801
		4	Lip seal, NBR	9612320502	9612316802
		4	Lip seal, FPM	9612320503	9612316803
40		1	Air fitting	9611992564	9611992564
41		1	Guide ring, PTFE	9612292607	9612292609
42	○▲	3	Washer	9611992572	9611992590
43		3	Screw	9611990462	9611991910
44	○▲	1	O-ring, EPDM (Standard)	9611992700	9611992702
	○▲	1	O-ring, NBR	9611992701	9611992703
	○▲	1	O-ring, FPM	9611992959	9611992693
45		1	Lock ring	9612298301	9612313601
46		2	Clamp ring		
47a		1	Clip ring		
				3135307271	
47b		1	Circlip	9611992663	
50		1	Upper plug		
		1	Upper plug, EPDM (Pos.39+50+64+65+66)		
		1	Upper plug, NBR (Pos.39+50+64+65+66)		
		1	Upper plug, FPM (Pos. 39+50+64+65+66)		
51		1	Lower plug		
		1	Lower plug, EPDM (Pos. 51 + 71)		
		1	Lower plug, NBR (Pos. 51 + 71)		
		1	Lower plug, FPM (Pos. 51 + 71)		
52		3	Clamp complete	9611311055	9611311057
54	○▲	1	Double lip seal, EPDM (Standard)	9612317501	9612320401
	○▲	1	Double lip seal, NBR	9612317502	9612320402
	○▲	1	Double lip seal, FPM	9612317503	
55		1	Guide ring, PTFE	9612292602	9612292606
56		1	Balancing housing (Standard)		
64		1	Guide ring	9612292611	9612292612
65	○▲	1	Seal ring, EPDM, (Standard)	9612359303	9612359309
	○▲	1	Seal ring, NBR	9612359301	9612359307
	○▲	1	Seal ring, FPM	9612359302	9612359308
66	○▲	1	Seal ring, EPDM, (Standard)	9612359406	9612359403
	○▲	1	Seal ring, NBR	9612359404	9612359401
	○▲	1	Seal ring, FPM	9612359405	9612359402
67	○▲	1	Seal ring, EPDM (Standard)	9612359306	9612359312
	○▲	1	Seal ring, NBR	9612359304	9612359310
	○▲	1	Seal ring, FPM	9612359305	9612359311

Not manufactured anymore

1.6

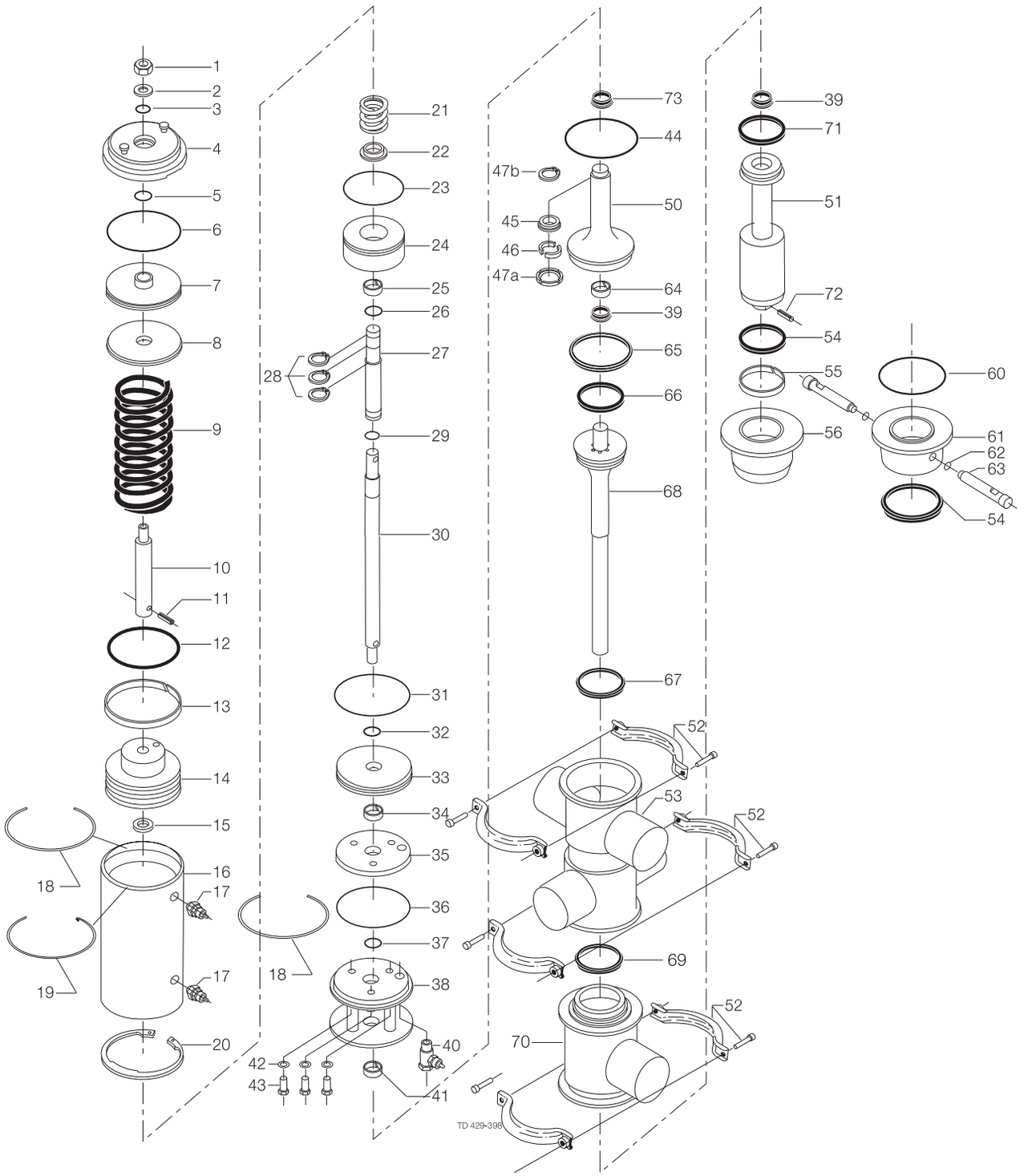

Pos		Qty	Denomination	51-76 mm DN50-65	101.6 mm DN80-100
68		1	Middle plug		
		1	Middle plug, EPDM (Pos. 68 + 67)		
		1	Middle plug, NBR (Pos. 68 + 67)		
		1	Middle plug, FPM (Pos. 68 + 67)		
69	○▲	1	Seal, EPDM (Standard)	9612320504	9612316804
	○▲	1	Seal, NBR	9612320505	9612316805
	○▲	1	Seal, FPM	9612320506	9612316806
71	○▲	1	Seal ring, EPDM (Standard)	9612359315	9612359318
	○▲	1	Seal ring, NBR	9612359313	9612359316
	○▲	1	Seal ring, FPM	9612359314	9612359317
72		1	Connex pin	9611992743	9611992742
Alternative					
			CIP-kit for balancing plug complete, EPDM		
54	○	1	Double lip seal, EPDM (Standard)	9612317501	9612320401
55		1	Guide ring PTFE	9612292602	9612292606
60	○	1	O-ring for CIP, EPDM	9611992700	9611992702
61		1	Balancing housing for CIP		
62		2	Washer, Nylon	9611992566	9611992566
63		2	Flushing tube	3135710131	3135710131
Accessories					
		1	Tool complete for actuator	9612317401	9612317401
Service kit for actuator					
1	□	1	Service kit A, NBR	9611920127	9611920130
Service kit for product wetted parts					
	▲	1	Service kit B, EPDM	9611920188	9611920191
	▲	1	Service kit B, NBR	9611920189	9611920192
	▲	1	Service kit B, FPM	9611920190	9611920193
Service kit for valve with CIP-connection on balancing housing					
	○	1	Service kit C, EPDM	9611920194	9611920197
	○	1	Service kit C, NBR	9611920195	9611920198
	○	1	Service kit C, FPM	9611920196	9611920199

Parts marked with □○▲ are included in Service kit.

Not manufactured anymore

1.6

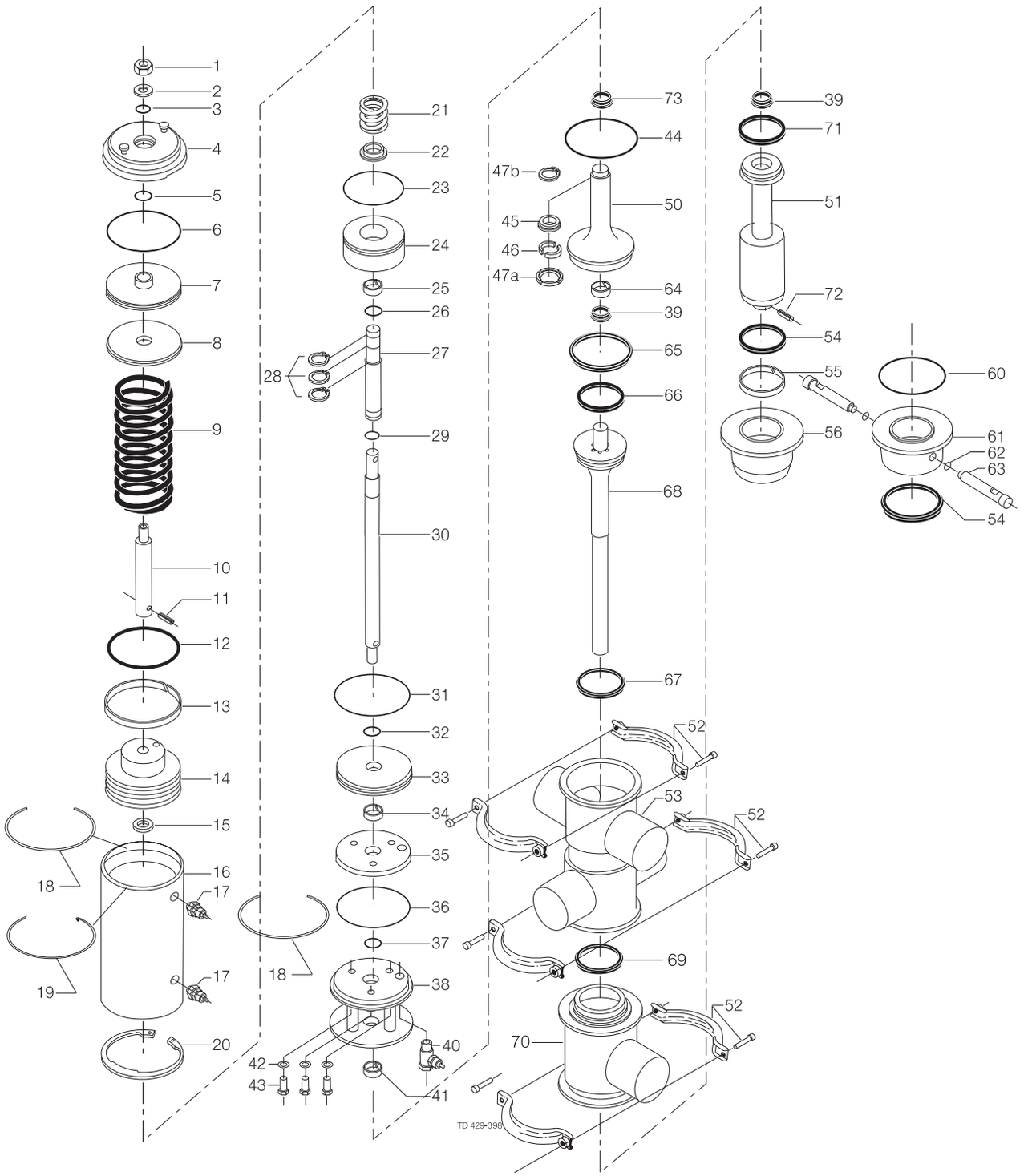

Pos	Qty	Denomination	51 mm	63.5 mm	76 mm	101.6 mm
53		Valve body 11-00				
		Valve body 12-00				
		Valve body 21-00				
		Valve body 22-00				
		Valve body 11-90				
		Valve body 12-90				
		Valve body 21-90				
		Valve body 22-90				
		Valve body 11-180				
		Valve body 11-270				
70		Lower valve body, 1 port				
		Lower valve body, 2 port				

Pos	Qty	Denomination	DN 50	DN 65	DN80	DN100
53		Valve body 11-00				
		Valve body 12-00				
		Valve body 21-00				
		Valve body 22-00				
		Valve body 11-90				
		Valve body 12-90				
		Valve body 21-90				
		Valve body 22-90				
		Valve body 11-180				
		Valve body 11-270				
70		Lower valve body, 1 port				
		Lower valve body, 2 port				

Valve body combination:

Type 11-00

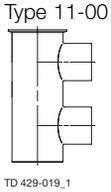

TD 429-019_1

Type 11-90

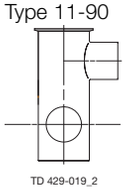

TD 429-019_2

Type 11-180

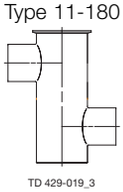

TD 429-019_3

Type 11-270

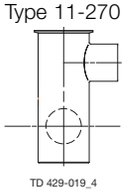

TD 429-019_4

Type 12-00

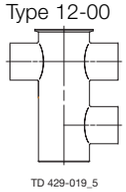

TD 429-019_5

Type 12-90

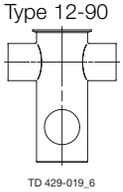

TD 429-019_6

Type 21-00

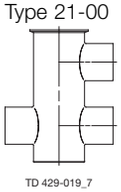

TD 429-019_7

Type 21-90

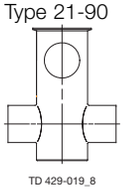

TD 429-019_8

Type 22-00

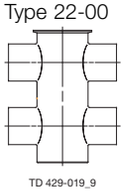

TD 429-019_9

Type 22-90

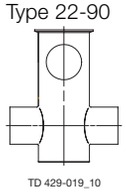

TD 429-019_10

Recommended spare parts: Service kits.

1. (Period - 9409)

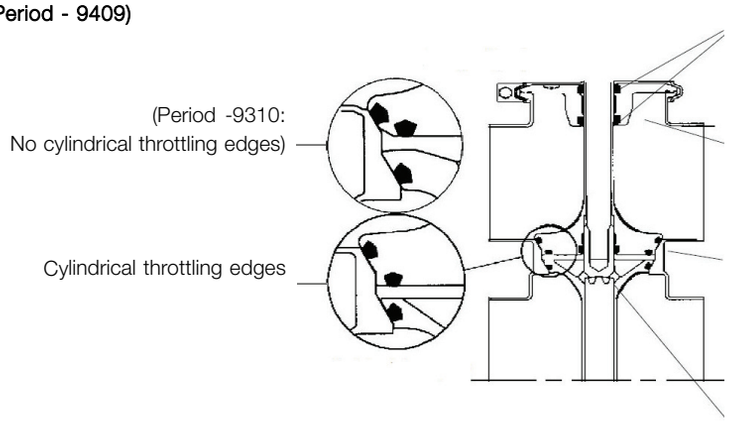

2 lip seals, top lip seal externally visible

Upper valve body distance

Datemark between valve bodies
(Period -9310:
No datemark between valve bodies)

6 leakage holes (Period -9310: 2 leakage holes)

Not manufactured anymore

1.6

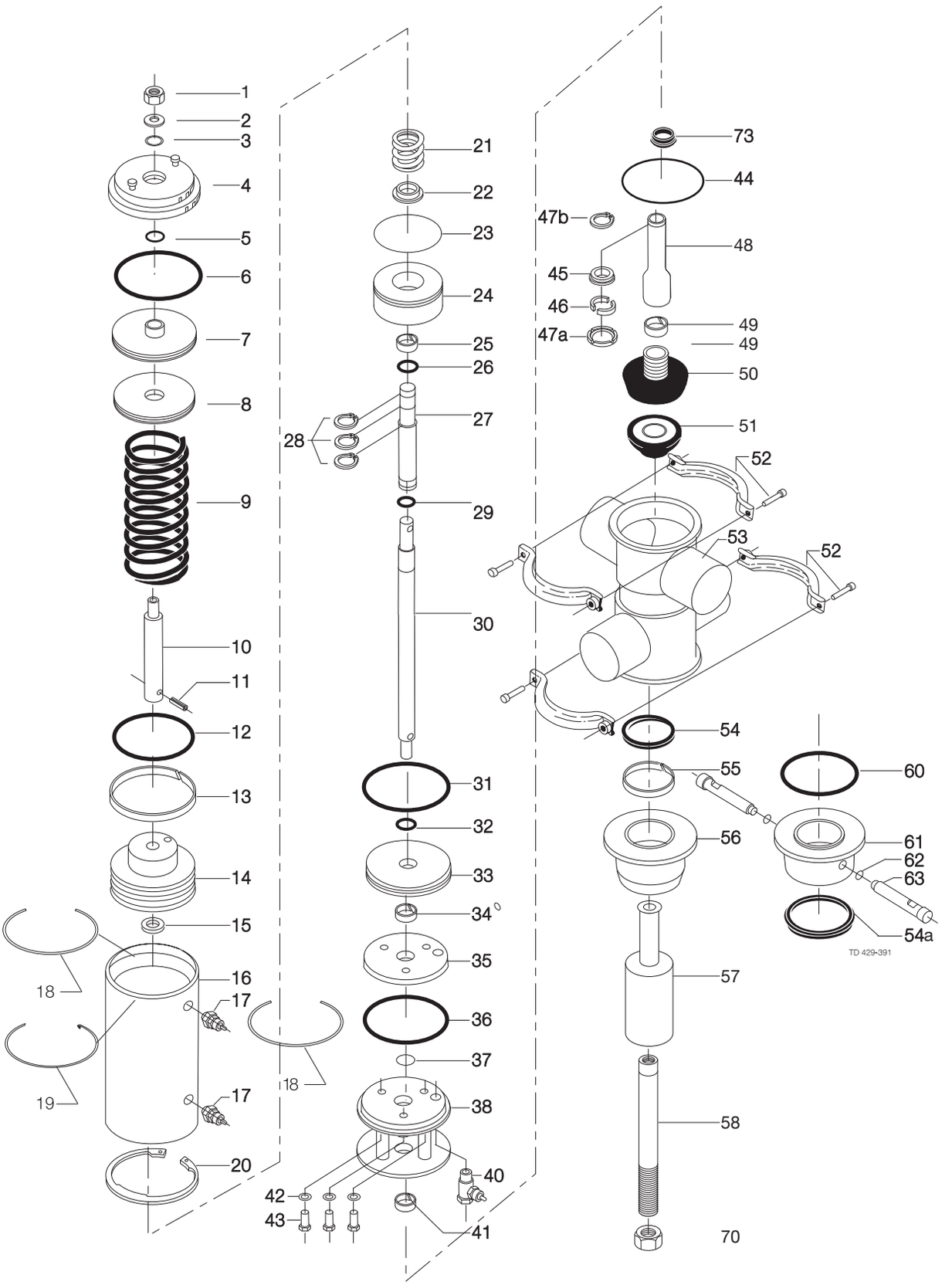

Pos		Qty	Denomination	51-76 mm DN50-65	101.6 mm DN80-100
1. (Period - 9409)					
1		1	Nut	9611992576	9611992576
2		1	Washer	22310135	22310135
3	□	1	O-ring, NBR	9611990096	9611990096
4		1	Cylinder lid		
5	□	1	O-ring, NBR	22340625	22340625
6	□	1	O-ring, NBR	26010467	9611992579
7		1	Upper piston		
8		1	Flange		
9		1	Spring	9612292801	9612315401
10		1	Upper piston rod		
11		1	Pin	9611992562	9611991314
12	□	1	O-ring, NBR	9611992556	9611992580
13		1	Guide ring, Turcite	9612292601	9612292608
14		1	Main piston		
16		1	Cylinder		
17		2	Air fitting	9611992563	9611992563
18		2	Retaining ring	9612292901	9612292902
19		1	Lock ring	9612293001	9612313201
20		1	Circlip	9611992561	9611992589
21		1	Spring	9612292701	9612315501
22		1	Spring support		9612310601
23	□	1	O-ring, NBR	9611992568	9611990643
24		1	Piston		
25		1	Guide ring, Turcite	9612292604	
26	□	1	O-ring, NBR	22340625	9611992582
27		1	Lower piston rod		
28		3	Circlip	9611992565	9611992588
29	□	1	O-ring, NBR	22340431	22340625
30		1	Inner stem		
31	□	1	O-ring, NBR	26010467	9611992580
32	□	1	O-ring, NBR	22340625	9611992581
33		1	Lower piston		
34		1	Guide ring, Turcite	9612292610	
35		1	Flange		
36	○▲	1	O-ring, NBR	26010467	9611992579
37	○▲	1	O-ring, NBR	22340625	9611992581
38		1	Bonnet		
39	○▲	2	Lip seal, EPDM (Standard)	9612320501	9612316801
40		1	Air fitting	9611992564	9611992564
41		1	Guide ring, PTFE	9612292607	9612292609
42	○▲	3	Washer	9611992572	9611992590
43		3	Screw	9611990462	9611991910
44	○▲	1	O-ring, EPDM (Standard)	9611992700	9611992702
45		1	Lock ring	9612298301	9612313601
46		2	Clamp ring		
47a		1	Clip ring	3135307271	
47b		1	Circlip	9611992663	
48		1	Lower stem		
49		1	Guide ring, PTFE	9612292603	9612292605
50		1	Upper plug, EPDM (Standard)		
		1	Upper plug, NBR		
		1	Upper plug, FPM		
51		1	Lower plug, EPDM (Standard)		
		1	Upper plug, NBR		
		1	Upper plug, FPM		
52		2	Clamp complete	9611311055	9611311057
54	○▲	1	Double lip seal, EPDM (Standard)	9612317501	9612320401
55		1	Guide ring, PTFE	9612292602	9612292606
56		1	Balancing housing (Standard)		
57		1	Balancing cylinder		
58		1	Lower inner spindle		
59		1	O-ring, EPDM	9611992662	9611992578
Alternative					
54	○	1	Double lip seal, EPDM (Standard)	9612317501	9612320401
55		1	Guide ring, PTFE	9612292602	9612292606
60	○	1	O-ring for CIP, EPDM	9611992700	9611992702
61		1	Balancing housing for CIP		
62		2	Washer, Nylon	9611992566	9611992566
63		2	Flushing tube	3135710131	3135710131
Accessories					
		1	Tool complete for actuator	9612317401	9612317401

Not manufactured anymore

1.6

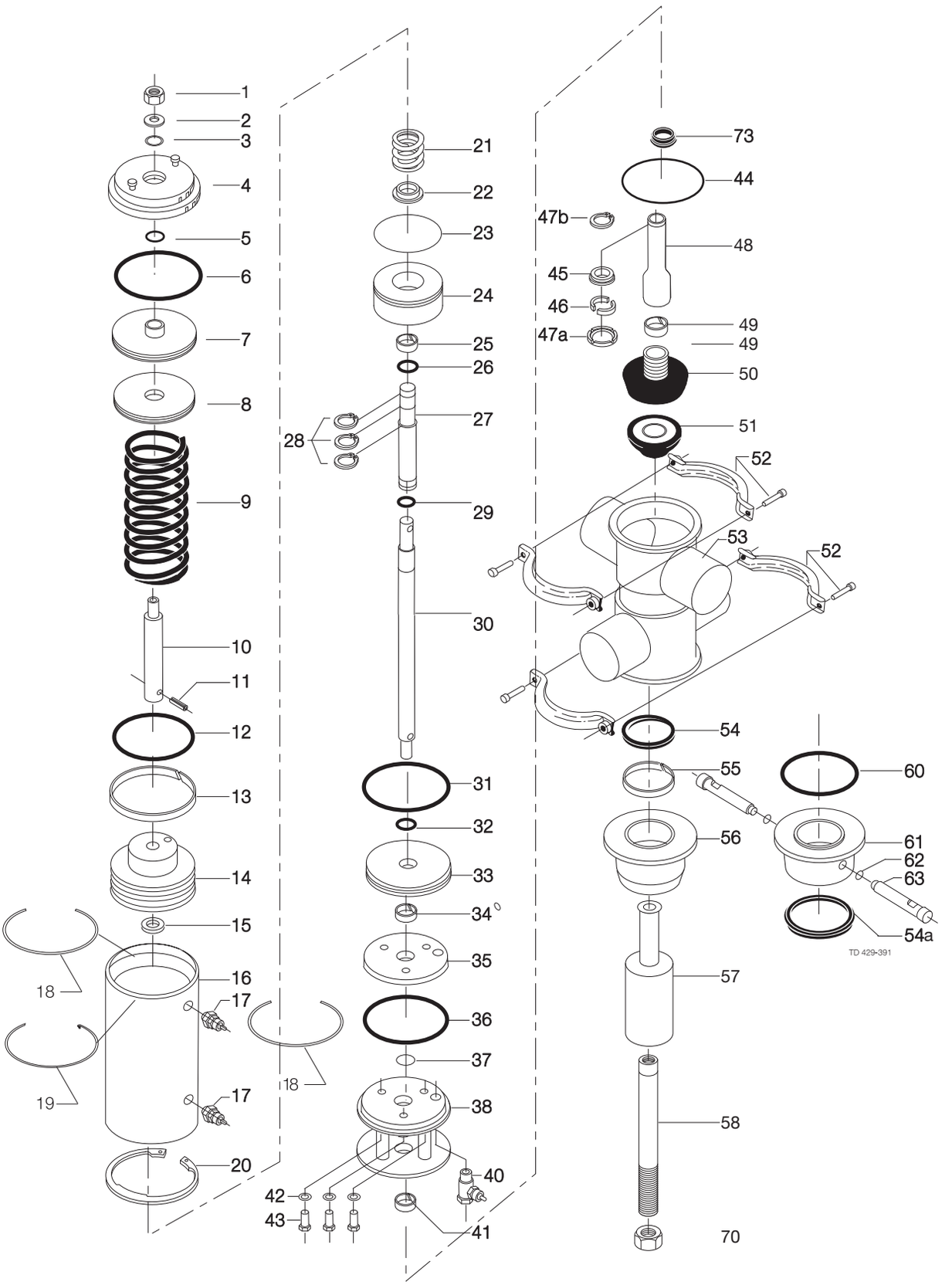

Pos	Qty	Denomination	51-76 mm DN50-65	101.6 mm DN80-100
Service kit for actuator				
	1	Service kit A, NBR	9611920127	9611920130
Service kit for product wetted parts				
	1	Service kit B, EPDM	9611920128	9611920131
	1	Service kit B, NBR	9611920129	9611920132
	1	Service kit B, FPM	9611920145	9611920146
Service kit for valve with CIP-connection on balancing housing				
		Service kit C, EPDM	9611920133	9611920135
		Service kit C, NBR	9611920134	9611920136
		Service kit C, FPM	9611920147	9611920148

Pos	Qty	Denomination	51 mm	63.5 mm	76 mm	101.6 mm
53	1	Valve body 11-00				
	1	Valve body 12-00				
	1	Valve body 21-00				
	1	Valve body 22-00				
	1	Valve body 11-90				
	1	Valve body 12-90				
	1	Valve body 21-90				
	1	Valve body 22-90				
	1	Valve body 11-180				
	1	Valve body 11-270				

Pos	Qty	Denomination	DN 50	DN 65	DN80	DN100
53	1	Valve body 11-00				
	1	Valve body 12-00				
	1	Valve body 21-00				
	1	Valve body 22-00				
	1	Valve body 11-90				
	1	Valve body 12-90				
	1	Valve body 21-90				
	1	Valve body 22-90				
	1	Valve body 11-180				
	1	Valve body 11-270				

Valve body combinations:

Type 11-00

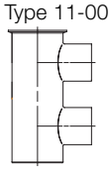

TD 429-019_1

Type 11-90

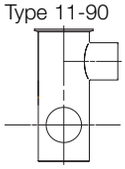

TD 429-019_2

Type 11-180

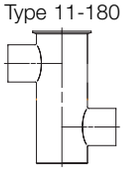

TD 429-019_3

Type 11-270

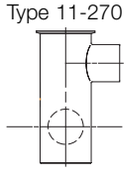

TD 429-019_4

Type 12-00

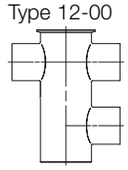

TD 429-019_5

Type 12-90

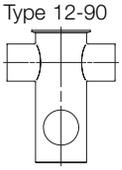

TD 429-019_6

Type 21-00

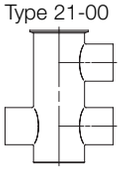

TD 429-019_7

Type 21-90

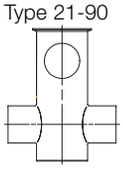

TD 429-019_8

Type 22-00

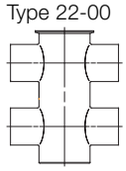

TD 429-019_9

Type 22-90

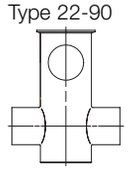

TD 429-019_10

1. (Period - 9409)

2 lip seals, top lip seal externally visible

Upper valve body distance

Datemark between valve bodies (Period -9310: no datemark between valve bodies)

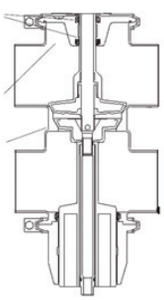

Not manufactured anymore

1.6

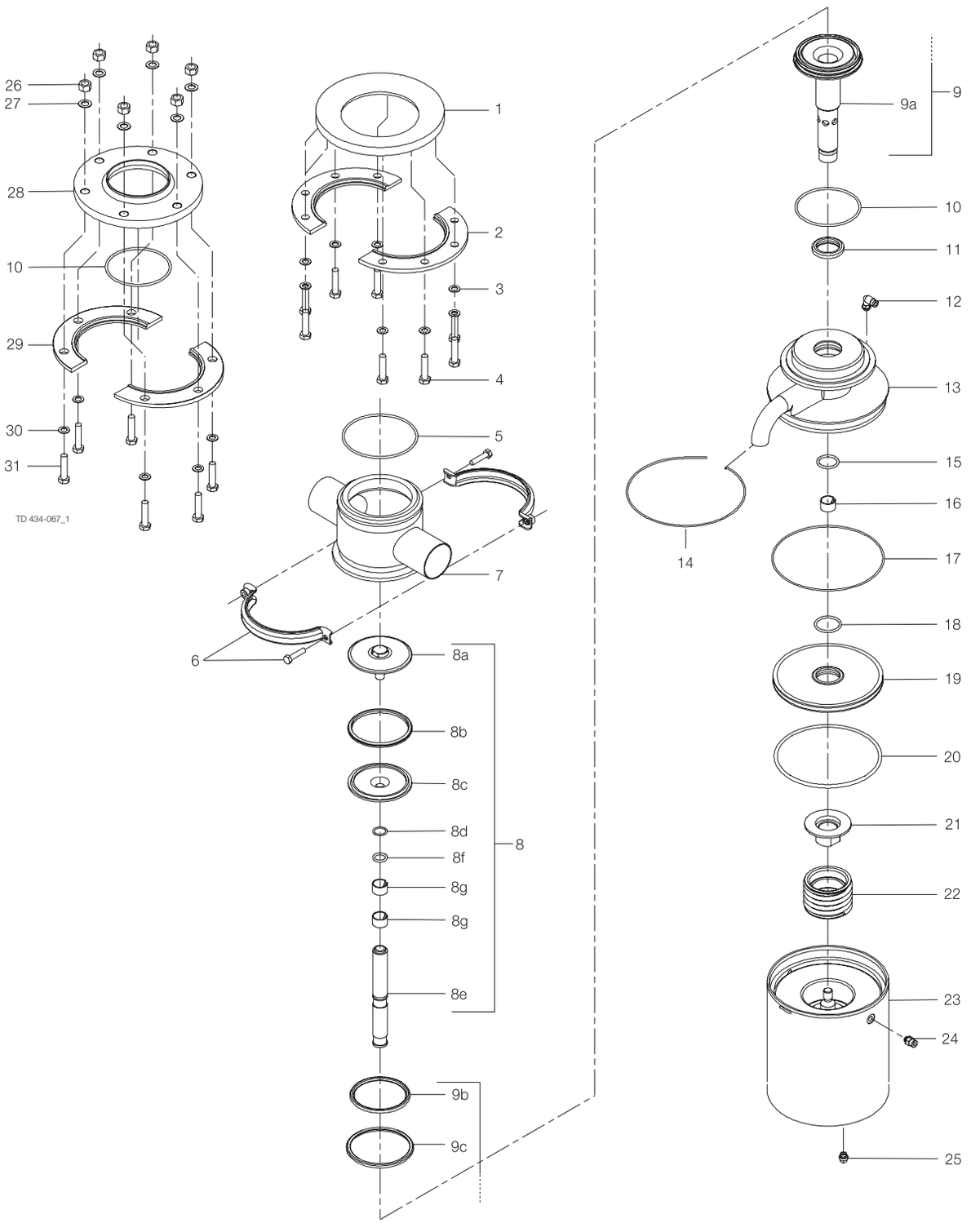

Pos		Qty	Denomination	DN65 63.5 mm	DN100 101.6 mm
1		1	Tank flange		
2		2	Counter flange		
3		8	Washer	9611992971	9611992971
4		8	Screw	9611992893	9611992893
5	□	1	O-ring, EPDM	9611991056	9611991056
		1	O-ring, NBR	9611990007	9611990007
		1	O-ring, FPM		
Clamp					
6		1	Clamp set	9611311057	9611311057
Valve body					
7		1	Valve body, 1 port, ISO		
		1	Valve body, 1 port, DIN		
		1	Valve body, 2 porte, ISO		
		1	Valve body, 2 ports, DIN		
Upper valve plug					
8		1	Upper plug complete, EPDM (Standard)		
		1	Upper plug complete, NBR		
		1	Upper plug complete, FPM		
8a		1	Upper plug, upper part		
8b	□	1	Seal ring, EPDM	9612381403	9612381403
		1	Seal ring, NBR	9612381401	9612381401
		1	Seal ring, FPM		
8c		1	Upper plug, lower part	9612378301	9612378301
8d	□	1	O-ring, EPDM	9611992901	9611992901
		1	O-ring, NBR	9611990445	9611990445
		1	O-ring, FPM		
8e		1	Spindle		9612378502
8f	□	1	O-ring, EPDM	9611992887	9611992887
		1	O-ring, NBR	9611991066	9611991066
		1	O-ring, FPM		
8g	□	2	Guide ring	9612380801	9612380801
Lower valve plug					
9		1	Lower plug complete, EPDM (Standard)		
		1	Lower plug complete, NBR		
		1	Lower plug complete, FPM		
9a		1	Lower plug		
9b	□	1	Seal ring, EPDM	9612359409	9612359409
		1	Seal ring, NBR	9612359407	9612359407
		1	Seal ring, FPM		
9c	□	1	Seal ring, EPDM	9612359321	9612359321
		1	Seal ring, NBR	9612359319	9612359319
		1	Seal ring, FPM		
10	□	1	O-ring, EPDM	9611992884	9611992884
		1	O-ring, NBR	9611990485	9611990485
		1	O-ring, FPM		
11	□	1	Lip seal, EPDM	9612317507	9612317507
		1	Lip seal, NBR		
		1	Lip seal, FPM	9612317509	9612317509
12		1	Air fitting	9611991988	9611991988
13		1	Bonnet		
14		1	Lock wire	9612380501	9612380501
15	□	1	O-ring, EPDM	9611991051	9611991051
		1	O-ring, NBR	9611990002	9611990002
		1	O-ring, FPM		
16	□	1	Guide ring	9611992849	9611992849
17	□	1	O-ring	9611992892	9611992892
18	□	1	O-ring	9611990488	9611990488
19		1	Upper piston		
20	□	1	O-ring	9611992845	9611992845
21		1	Support ring		
22		1	Spring assembly		
Actuator					
23		1	Cylinder, without 3A marking		
		1	Cylinder, with 3A marking		
24		1	Air fitting	9611991987	9611991987
25		1	Plug		

Not manufactured anymore

1.6

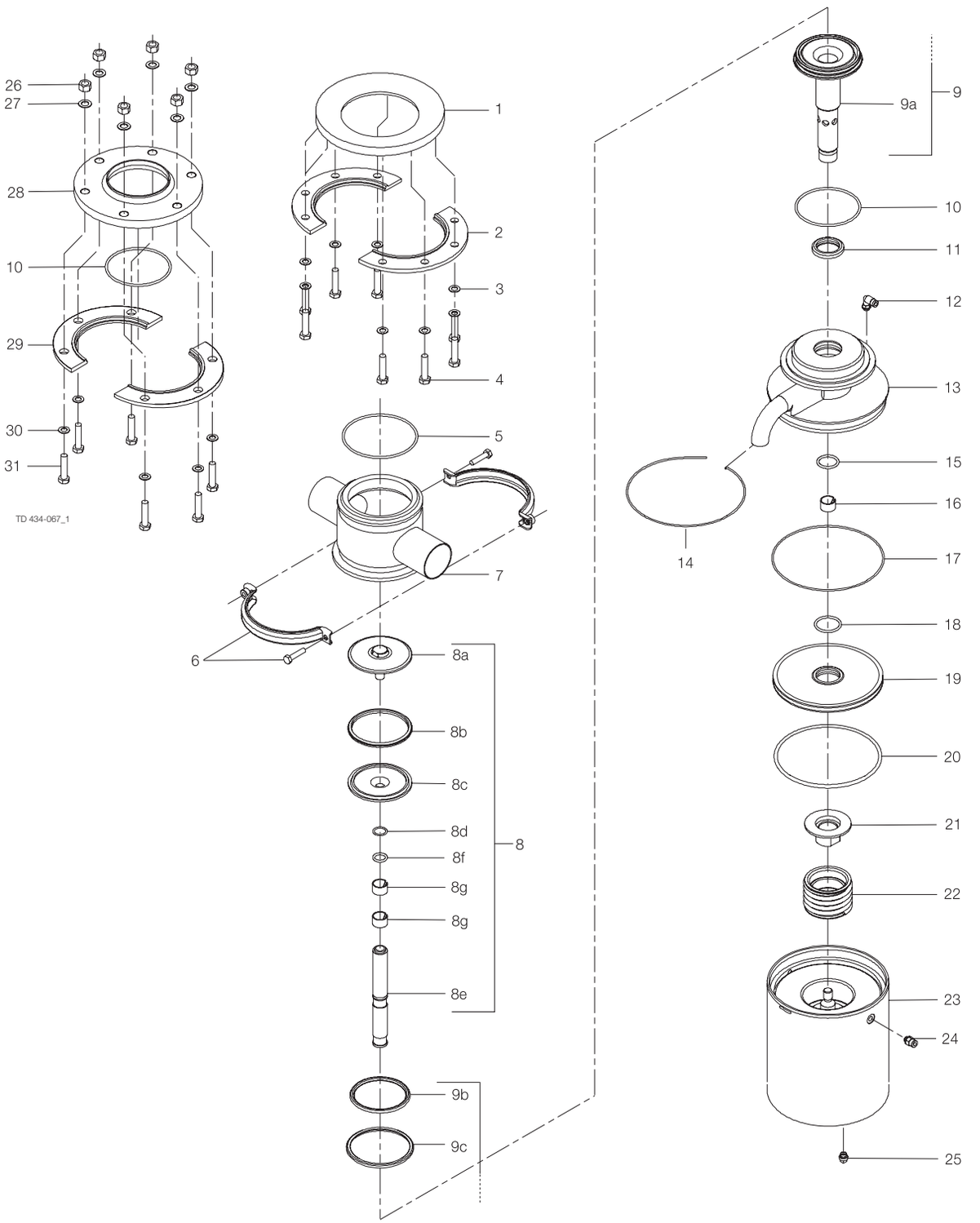

Pos	Qty	Denomination	63.5 mm DN65	101.6 mm DN100
Alternatives				
10	1	O-ring, EPDM	9611992884	9611992884
	1	O-ring, NBR	9611990485	9611990485
	1	O-ring, FPM		
26	6	Nut	9611992960	9611992960
27	6	Washer		
28	1	Welding flange for, DN100 tube		
	1	Welding flange for, 101.6 mm tube		
29	2	Counter flange		
30	6	Washer	9611990676	9611990676
31	6	Screw	9611991834	9611991834

		63.5 mm DN65	101.6 mm DN100
Service kit for product wetted parts			
□	**Service kit EPDM**	9611920221	9611920221

Parts marked with □ are included in the service kit.

Recommended spare parts: Service kits.

900-417/1

Not manufactured anymore

1.6

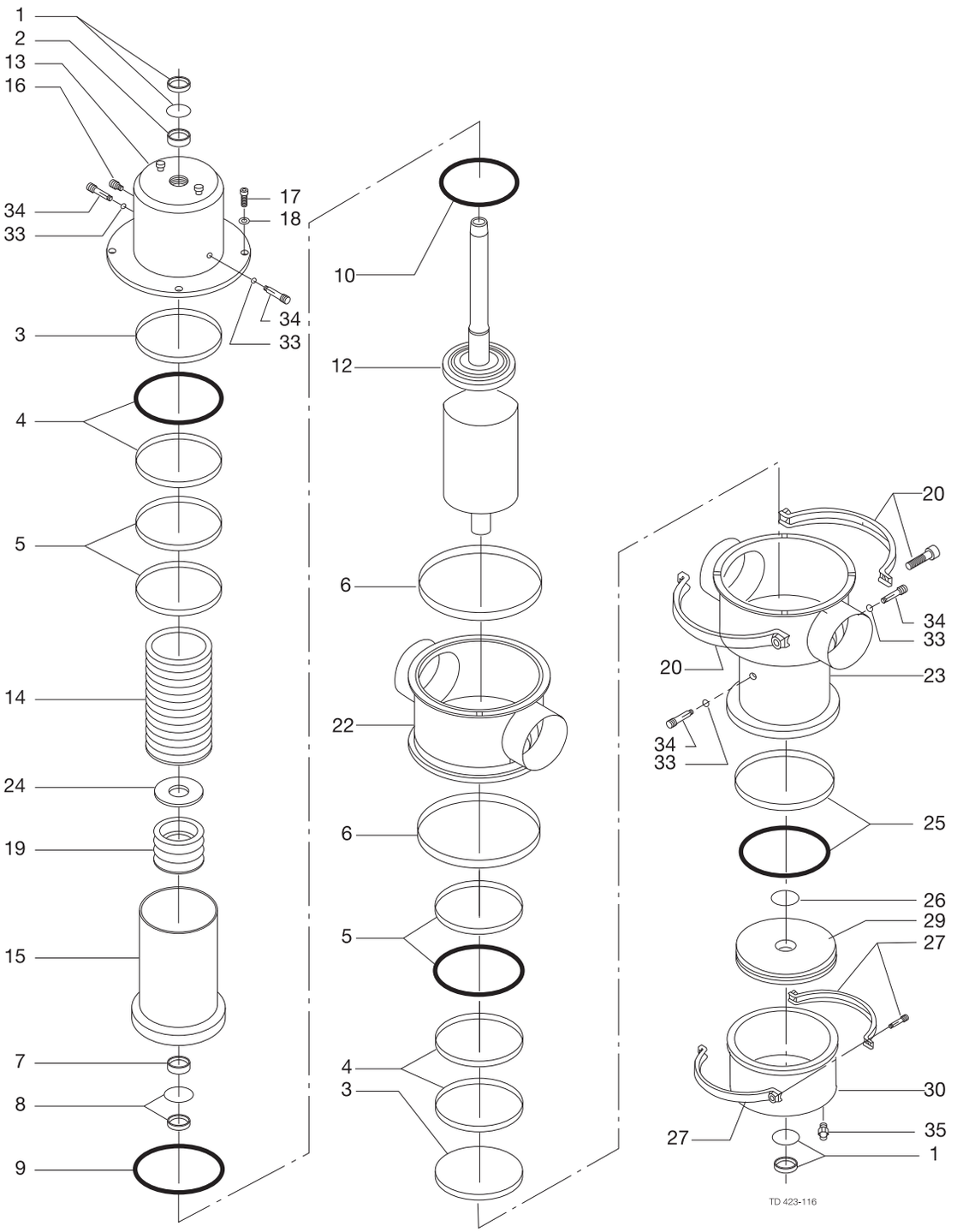

Pos		Qty	Denomination	51 mm	63.5 mm	NW 50	NW 65
1	□♦	2	Glide ring seal, PTFE/NBR (standard)				
2	□♦	1	Guide ring, PTFE/Carbon				
3	□♦	2	Guide ring, PTFE/Carbon				
4	□♦	2	Glide ring seal, PTFE/EPDM (standard)				
		2	Glide ring seal, PTFE/NBR				
		2	Glide ring seal, PTFE/FPM				
5	□♦○●	2	Glide ring seal, PTFE/EPDM (standard)				
		2	Glide ring seal, PTFE/NBR				
		2	Glide ring seal, PTFE/FPM				
6	□♦	2	Seal ring, EPDM (standard)				
		2	Seal ring, NBR				
		2	Seal ring, FPM				
7	□♦	1	Guide ring, PTFE/Carbon				
8	□♦	1	Glide ring seal, PTFE/EPDM (standard)				
		1	Glide ring seal, PTFE/NBR				
		1	Glide ring seal, PTFE/FPM				
9	□♦○●	1	O-ring, EPDM (standard)				
		1	O-ring, NBR				
		1	O-ring, FPM				
10	□●	1	Full face seal, EPDM (standard)				
		1	Full face seal, NBR				
		1	Full face seal, FPM				
12		1	Valve plug, lower				
13		1	Valve top (incl. pos. 33 + 34)				
14		1	Spring assembly, upper				
15		1	Valve plug, upper				
16		1	Plug	9613414101	9613414101	9613414101	9613414101
17		4	Screw	9611990273	9611990273	9611990273	9611990273
18		4	Washer	9611991831	9611991831	9611991831	9611991831
19		1	Spring assembly, lower				
20		1	Clamps and screws	9611311056	9611311056	9611311056	9611311056
22		1	Valve body, upper, 1 port				
		1	Valve body, upper, 2 ports				
23		1	Valve body, lower, 1 port (incl. pos. 33 + 34)				
		1	Valve body, lower, 2 ports (incl. pos. 33 + 34)				
24		1	Washer				
25	♦	1	Glide ring seal, PTFE/NBR (standard)				
26	♦	1	O-ring, NBR				
27		1	Clamps and screws	9611311055	9611311055	9611311055	9611311055
29		1	Piston				
30		1	Cylinder				
33		4	O-ring, (period 9603-)	9611993119	9611993119	9611993119	9611993119
		4	Seal ring (period -9603)				
34		4	Flushing tube, (period 9603-)	3135710171	3135710171	3135710171	3135710171
		4	Flushing pipe (Period -9603)				
35		1	Air fitting	9611992323	9611992323	9611992323	9611992323

Not manufactured anymore

1.6

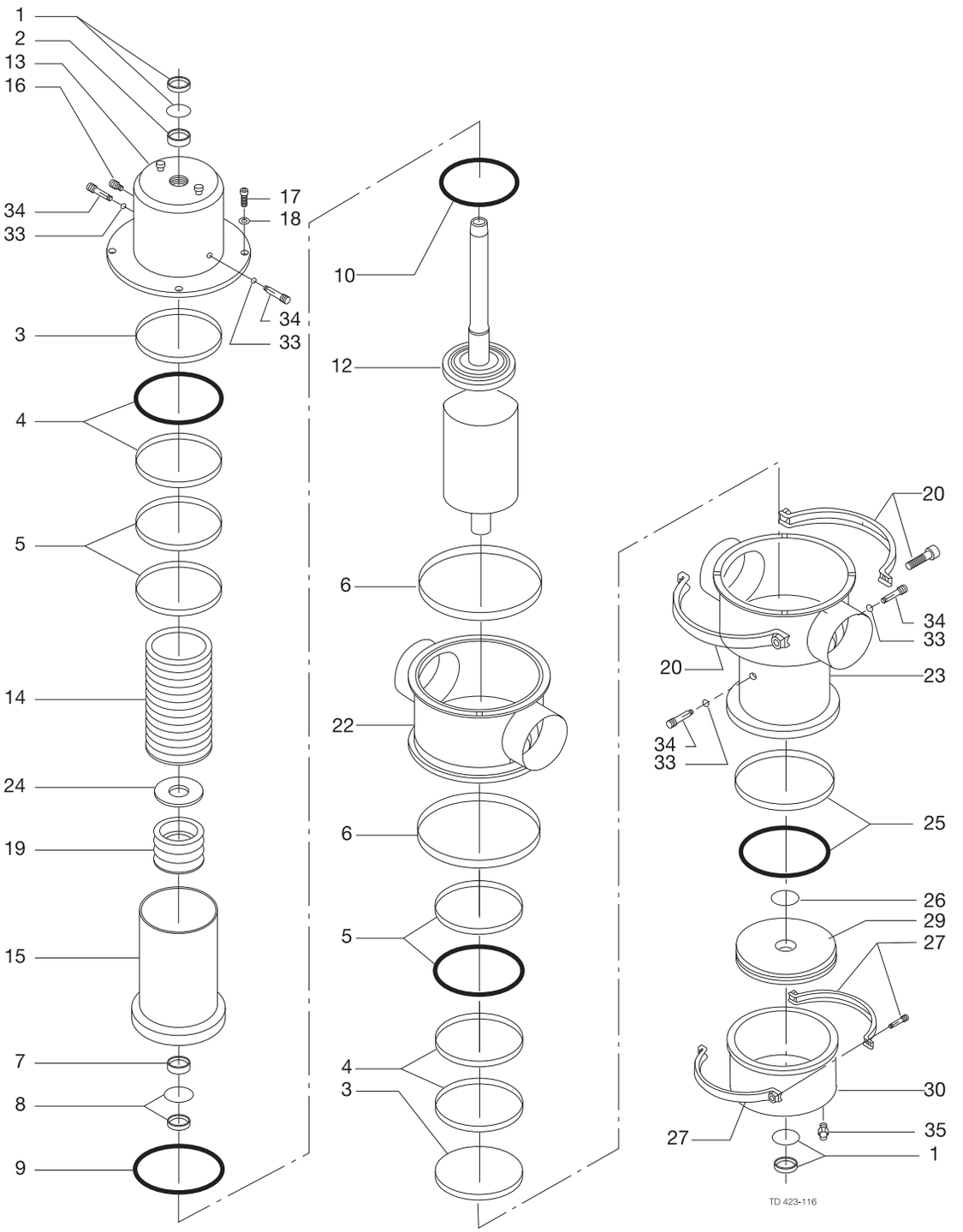

		51 mm	63.5 mm	NW 50	NW 65
Service kit A					
•	Service kit, EPDM "Full face"	9611920401	9611920401	9611920401	9611920401
Service kit B					
□	Service kit, EPDM “full face	9611920404	9611920404	9611920404	9611920404
Alternative					
♦○	O-ring, EPDM	9611992184	9611992184	9611992184	9611992184
Service kit A					
•	Service kit, EPDM	9611920054	9611920054	9611920054	9611920054
Service kit B					
□	Service Kit, EPDM	9611920063	9611920063	9611920063	9611920063

Parts marked with □♦○● are included in the service kit.
Recommended spare parts: Service kits.

Not manufactured anymore

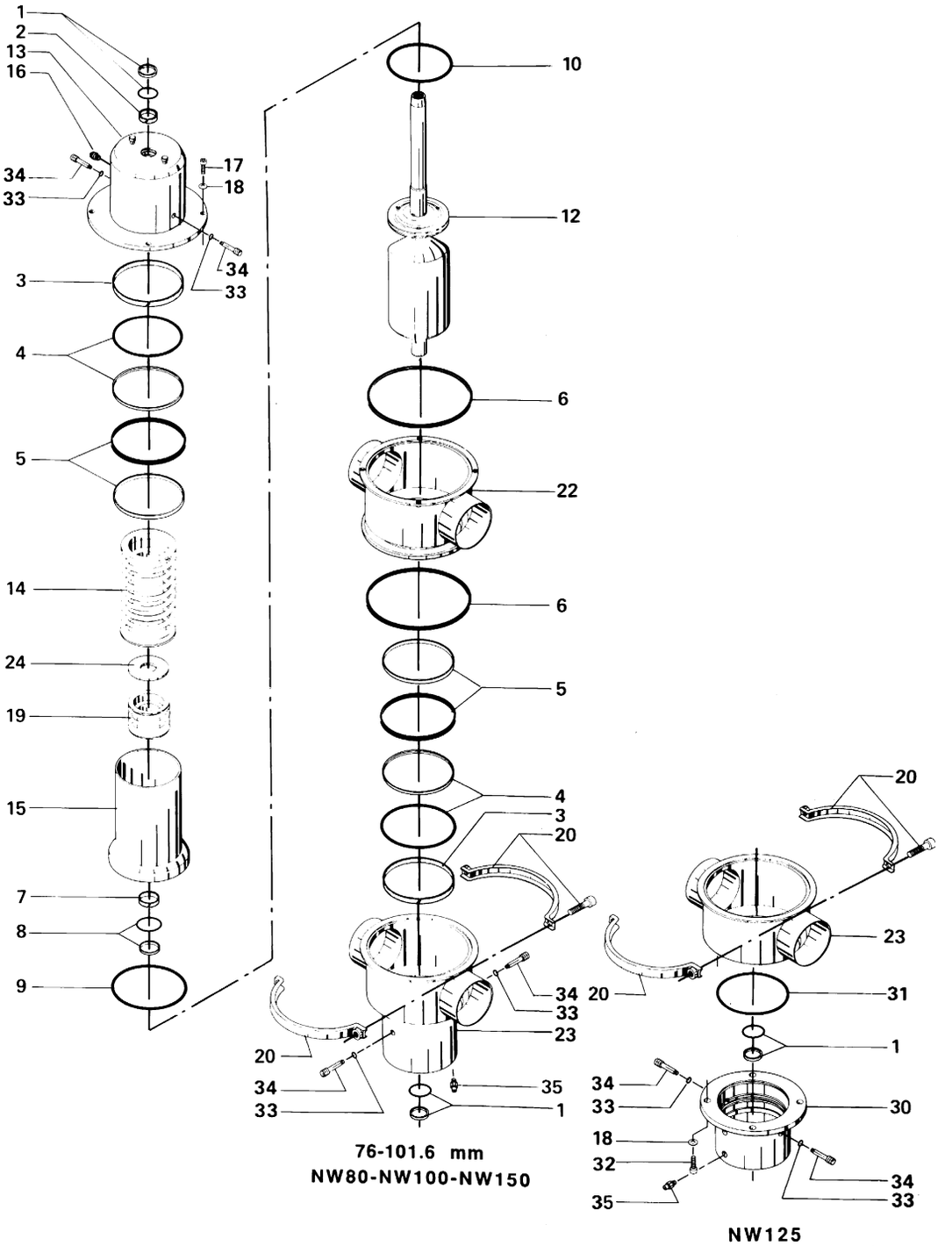

Pos		Qty	Denomination	76 mm	101.6 mm
1	□♦	2	Glide ring seal, PTFE/NBR (standard)		
2	□♦	1	Guide ring, PTFE/Carbon		
3	□♦	2	Guide ring, PTFE/Carbon		
4	□♦	2	Glide ring seal,PTFE/EPDM (standard)		
		2	Glide ring seal, PTFE/NBR		
		2	Glide ring seal, PTFE/FPM		
5	□♦○●	2	Glide ring seal, PTFE/EPDM (standard)		
		2	Glide ring seal, PTFE/NBR		
		2	Glide ring seal, PTFE/FPM		
6	□♦	2	Seal ring, EPDM (standard)		
		2	Seal ring, NBR		
		2	Seal ring, FPM		
7	♦	1	Guide ring, PTFE/Carbon		
8	♦	1	Glide ring seal, PTFE/EPDM (standard)		
		1	Glide ring seal, PTFE/NBR		
		1	Glide ring seal, PTFE/FPM		
9	□♦○●	1	O-ring, EPDM (standard)		
		1	O-ring, NBR		
		1	O-ring, FPM		
10	□●	1	Full face seal, EPDM (standard)		
		1	Full face seal, NBR		
		1	Full face seal, FPM		
12		1	Valve plug, lower		
13		1	Valve top (incl. pos. 33 + 34)		
14		1	Spring assembly, upper		
15		1	Valve plug, upper		
16		1	Plug	9613414101	9613414101
17		4	Screw	9611990273	9611990273
18		4	Washer	9611991831	9611991831
19		1	Spring assembly, lower		
20		1	Clamps and screws	9611311058	9611311058
22		1	Valve body, upper, 1 port		
		1	Valve body, upper, 2 ports		
23		1	Valve body, lower, 1 port (incl. pos. 33 + 34)		
		1	Valve body, lower, 2 ports, (incl. pos. 33 + 34)		
24		1	Washer		
33		4	O-ring, EPDM (Period 9603-)	9611993119	9611993119
		4	Seal ring (Period -9603)	9611992566	9611992566
34		4	Flushing tube (Period 9603-)	3135710171	3135710171
		4	Flushing pipe (Period -9603)	3135710131	3135710131
35		1	Air fitting	9611992323	9611992323
Service Kit A					
	●		EPDM "Full face"	9611920407	9611920407
			NBR "Full face"		
			FPM "Full face"		
Service Kit B					
	□		EPDM "Full face"	9611920413	9611920413
			NBR "Full face"		
			FPM "Full face"		
Alternative					
10	♦○	1	O-ring, EPDM	9611992187	9611992187
Service Kit A					
	○		EPDM	9611920057	9611920057
			NBR		
			FPM		
Service Kit B					
	♦		EPDM	9611920066	9611920066
			NBR		
			FPM		

Parts marked with □♦○● are included in the service kit.

Recommended spare parts: Service Kits.

Not manufactured anymore

1.6

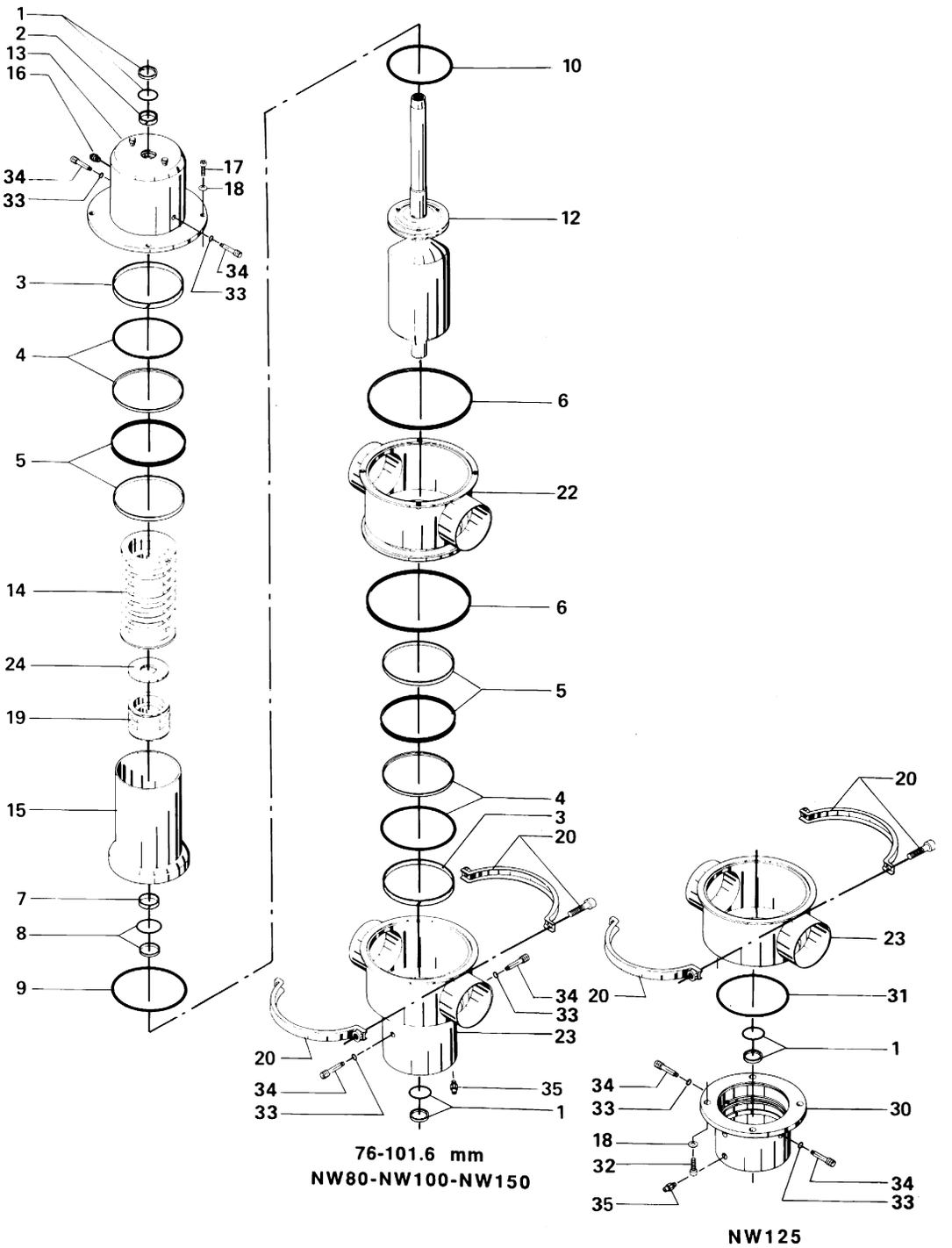

Pos		Qty	Denomination	NW80	NW100	NW125	NW150
1	□♦	2	Glide ring seal, PTFE/NBR (standard)				
2	□♦	1	Guide ring, PTFE/Carbon				
3	□♦	2	Guide ring, PTFE/Carbon				
4	□♦	2	Glide ring seal,PTFE/EPDM (standard)				
		2	Glide ring seal, PTFE/NBR				
		2	Glide ring seal, PTFE/FPM				
5	□♦○●	2	Glide ring seal, PTFE/EPDM (standard)				
		2	Glide ring seal, PTFE/NBR				
		2	Glide ring seal, PTFE/FPM				
6	□♦	2	Seal ring, EPDM (standard)				
		2	Seal ring, NBR				
		2	Seal ring, FPM				
7	♦	1	Guide ring, PTFE/Carbon				
8	♦	1	Glide ring seal, PTFE/EPDM (standard)				
		1	Glide ring seal, PTFE/NBR				
		1	Glide ring seal, PTFE/FPM				
9	□♦○●	1	O-ring, EPDM (standard)				
		1	O-ring, NBR				
		1	O-ring, FPM				
10	□●	1	Full face seal, EPDM (standard)				
		1	Full face seal, NBR				
		1	Full face seal, FPM				
12		1	Valve plug, lower				
13		1	Valve top (incl. pos. 33 + 34)				
14		1	Spring assembly, upper				
15		1	Valve plug, upper				
16		1	Plug	9613414101	9613414101	9613414101	9613414101
17		4	Screw	9611990273	9611990273	9611990273	
		8	Screw, NW 150				9611990273
18		4	Washer	9611991831	9611991831	9611991831	
		8	Washer, NW 150				9611991831
19		1	Spring assembly, lower				
20		1	Clamps and screws	9611311058	9611311058	9611311058	9611311059
22		1	Valve body, upper, 1 port				
		1	Valve body, upper, 2 ports				
23		1	Valve body, lower, 1 port (incl. pos. 33 + 34)				
		1	Valve body, lower, 2 ports, (incl. pos. 33 + 34)				
24		1	Washer				
30		1	Cylinder (incl. pos. 33 + 34)				
31		1	Seal ring, EPDM			3135700701	
32		4	Screw			9611992633	
33		4	O-ring, EPDM (Period 9603-)	9611993119	9611993119	9611993119	9611993119
		4	Seal ring (Period -9603)	9611992566	9611992566	9611992566	9611992566
34		4	Flushing tube (Period 9603-)	3135710171	3135710171	3135710171	3135710171
		4	Flushing pipe (Period -9603)				
35		1	Air fitting	9611992323	9611992323	9611992323	9611992323
Service kit A							
	●		EPDM "Full face"	9611920407	9611920407	9611920407	
			NBR "Full face"				
			FPM "Full face"				
Service kit B							
	□		EPDM "Full face"	9611920413	9611920413	9611920413	
			NBR "Full face"				
			FPM "Full face"				
Alternative							
10	♦○	1	O-ring, EPDM	9611992187	9611992187	9611992187	
Service kit A							
	○		EPDM	9611920057	9611920057	9611920057	
			NBR				
			FPM				
Service kit B							
	♦		EPDM	9611920066	9611920066	9611920066	
			NBR				
			FPM				

Parts marked with □♦○●□♦○● are included in the service kit.

Recommended spare parts: Service kits.

Not manufactured anymore

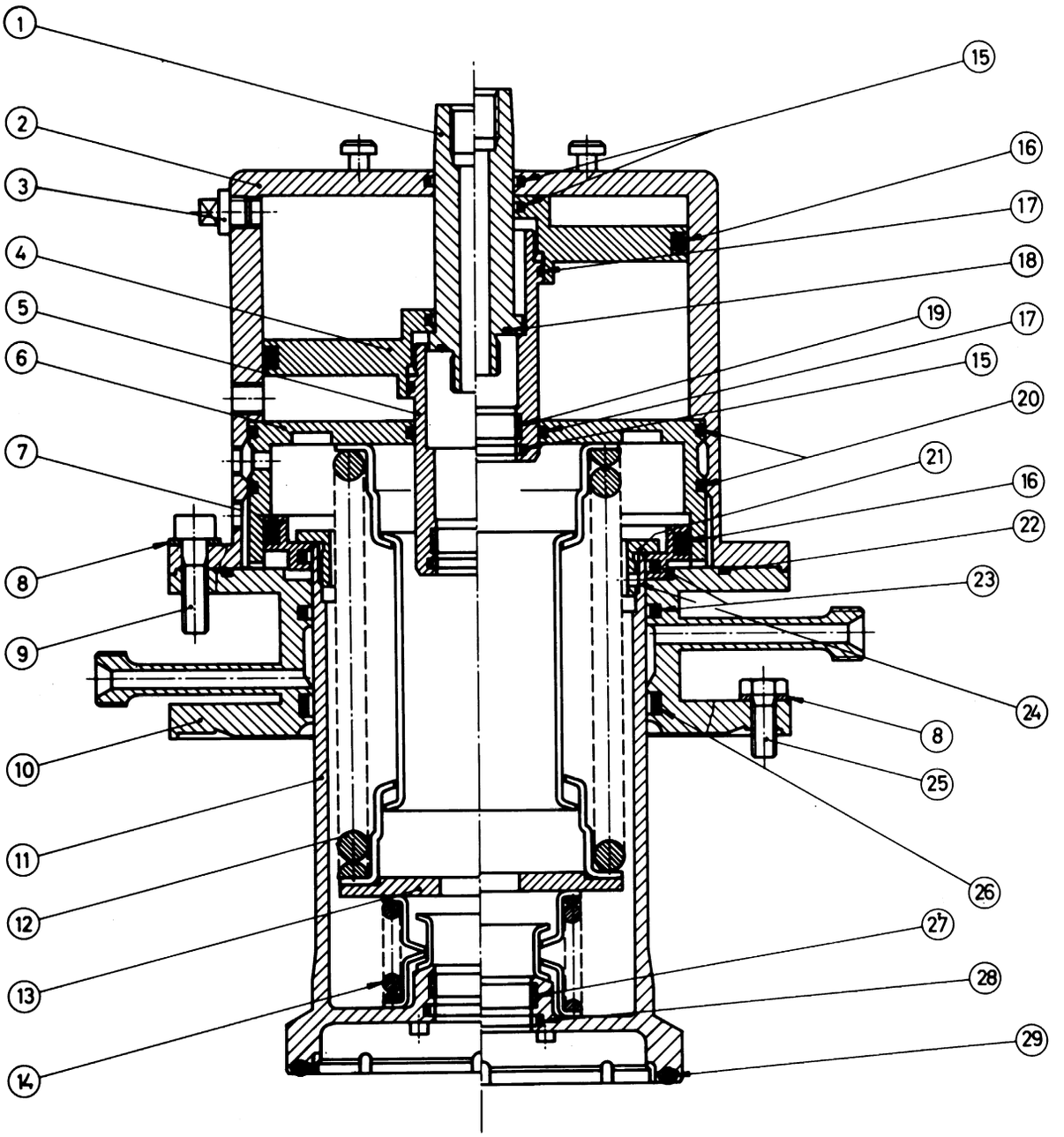

Pos	Qty	Denomination	NW 65/63.5 mm	NW 50/51 mm
1	1	Extension		
2	1	Housing		
3	1	Plug	9613414101	9613414101
4	1	Upper piston		
5	1	Catch		
6	1	Backstop		
7	1	Lower piston		
8	1	Adaptor		
9	8	Washer	9611991831	9611991831
10	4	Screw		
11	1	Upper valve cone		
12	1	Upper spring assembly		
13	1	Washer		
14	1	Lower spring assembly		
15*	3	Gl. ring seal, PTFE/NBR	3180124772	3180124772
16*	2	O-ring, NBR	9611990055	9611990055
17*	2	O-ring, NBR	22340658	22340658
18*	1	O-ring, EPDM	22340380	22340380
19*	2	O-ring, NBR	9611990095	9611990095
20	1	Retaining ring		
21	4	Screw		
22*	1	O-ring, NBR	22340622	22340622
23	1	Gl. ring seal, PTFE/EPDM		
23*	1	Gl. ring seal, PTFE/NBR		
23	1	Gl. ring seal, PTFE/FPM		
24*	2	Gl. ring seal, PTFE/EPDM		
24	2	Gl. ring seal, PTFE/NBR		
	2	Gl. ring seal, PTFE/FPM		
25	1	Guide ring, PTFE/Carbon	3135700693	3135700693
26*	1	Gl. ring seal, PTFE/EPDM		
26	1	Gl. ring seal, PTFE/NBR		
	1	Gl. ring seal, PTFE/FPM		
27*	1	O-ring, EPDM	9611992175	9611992175
27	1	O-ring, NBR		
	1	O-ring, FPM		

* = Standard seals.

Seals in parenthesis are available.

Other parts are standard parts for SMP valves.

Recommended spare parts: Pos. 15, 16, 17, 18, 19, 22, 23, 24, 25, 26 and 27.

Not manufactured anymore

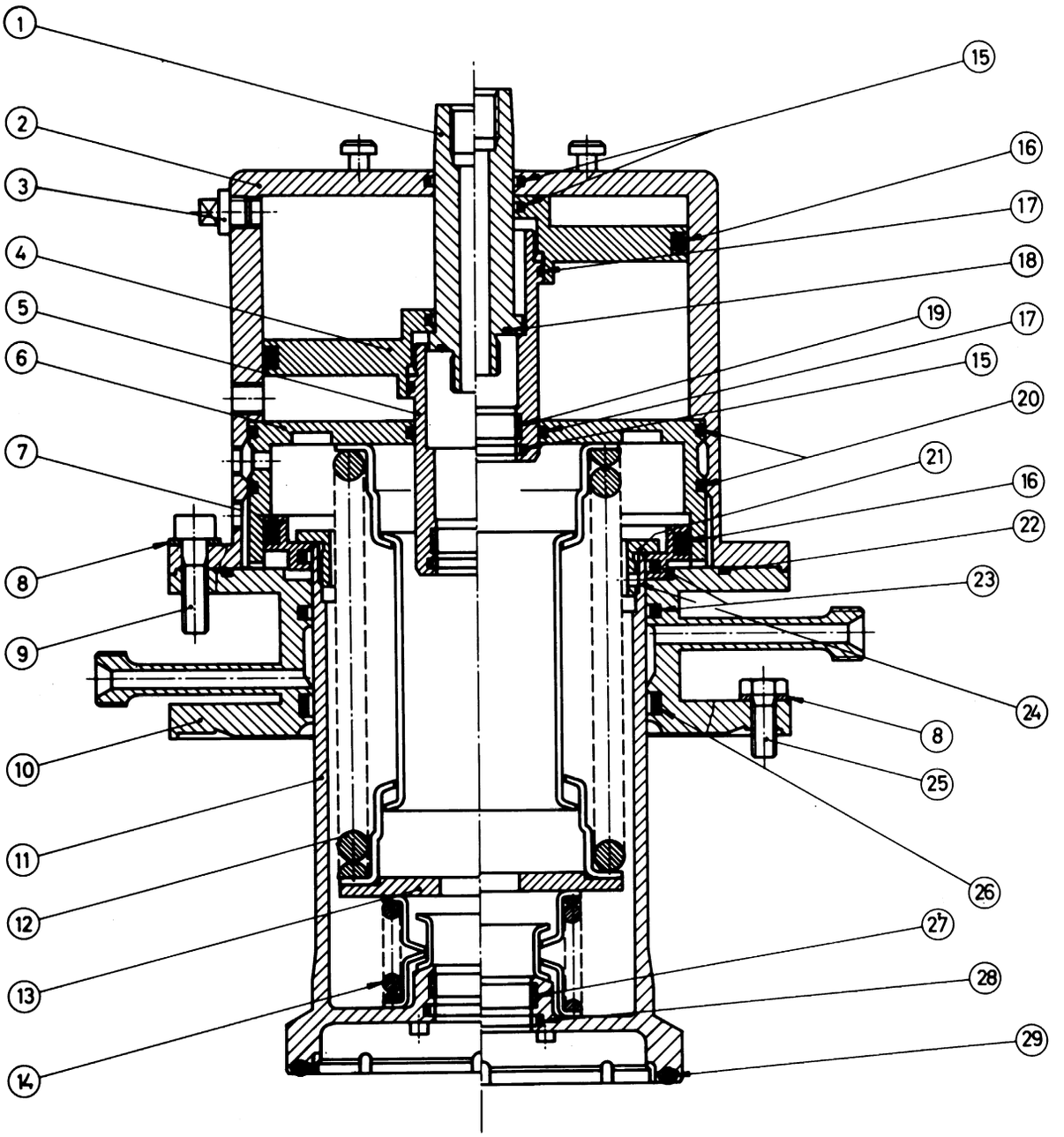

Pos	Qty	Denomination	NW 80/76 mm	NW100/ 101.6 mm	NW125
1	1	Extension			
2	1	Housing			
3	1	Plug	9613414101	9613414101	9613414101
4	1	Upper piston			
5	1	Catch			
6	1	Backstop			
7	1	Lower piston			
8	8	Washer	9611991831	9611991831	9611991831
9	4	Screw			
10	1	Adaptor			
11	1	Upper valve cone			
12	1	Upper spring assembly			
13	1	Washer			
14	1	Lower spring assembly			
15*	3	Gl. ring seal, PTFE/NBR	3180124772	3180124772	3180124772
16*	2	O-ring, NBR	22341227	22341227	22341227
17*	2	O-ring, NBR	22340658	22340658	22340658
18*	1	O-ring, EPDM	22340380	22340380	22340380
19	1	Guide ring, PTFE/Carbon	3135700692	3135700692	3135700692
20*	2	O-ring, NBR	22340685	22340685	22340685
21	1	Retaining ring			
22*	2	O-ring, NBR	9611991489	9611991489	9611991489
23	2	Gl. ring seal, PTFE/EPDM			
23*	2	Gl. ring seal, PTFE/NBR			
23	4	Gl. ring seal, PTFE/FPM			
24	1	Screw			
25*	1	Gl. ring seal, PTFE/EPDM			
25	1	Gl. ring seal, PTFE/NBR			
	1	Gl. ring seal, PTFE/FPM			
26	1	Guide ring, PTFE/Carbon	3135700693	3135700693	3135700693
27*	1	Gl. ring seal, PTFE/EPDM			
27	1	Gl. ring seal, PTFE/NBR			
	1	Gl. ring seal, PTFE/FPM			
28*	1	O-ring, EPDM	9611992178	9611992178	9611992178
28	1	O-ring, NBR			
	1	O-ring, FPM			

* = Standard seals.

Seals in parenthesis are available.

Other parts are standard parts for SMP valves.

Recommended spare parts: Pos. 15, 16, 17, 18, 19, 20, 22, 23, 25, 26, 27 and 28.

Not manufactured anymore

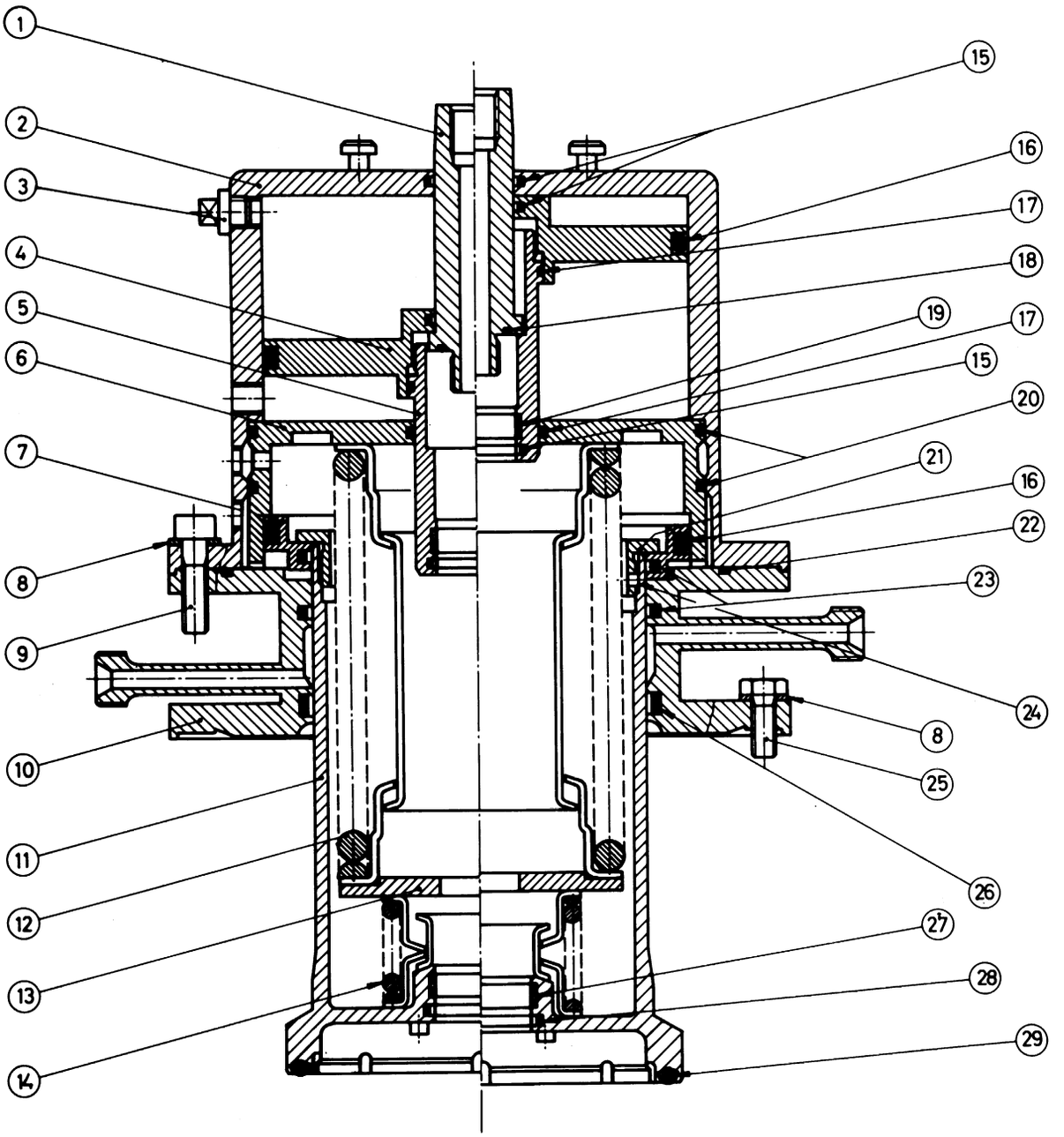

Pos	Qty	Denomination	NW 150
1	1	Extension	
2	1	Housing	
3	1	Plug	9613414101
4	1	Upper piston	
5	1	Catch	
6	1	Backstop	
7	1	Lower piston	
8	16	Washer	
9	8	Screw	
10	1	Adaptor	
11	1	Upper valve cone	
12	1	Upper spring assembly	
13	1	Washer	
14	1	Lower spring assembly	
15*	3	Glide ring seal, PTFE/NBR	3180124772
16*	2	O-ring, NBR	
17*	2	O-ring, NBR	22340658
18*	1	O-ring, EPDM	22340380
19	1	Guide ring, PTFE/Carbon	3135700692
20*	2	O-ring, NBR	22340675
21	1	Ring for upper valve cone	
22*	1	O-ring, NBR	
23	1	Glide ring seal, PTFE/EPDM	
23*	2	Glide ring seal, PTFE/NBR	
23	2	Glide ring seal, PTFE/FPM	
24	1	Lock-pin	
25	8	Screw	
26	1	Glide ring seal, PTFE/EPDM	
	1	Glide ring seal, PTFE/NBR	
	1	Glide ring seal, PTFE/FPM	
27	1	Guide ring, PTFE/Carbon.	3135700693
28*	1	Glide ring seal, PTFE/EPDM	
28	1	Glide ring seal, PTFE/NBR	
	1	Glide ring seal, PTFE/FPM	
29*	1	O-ring, EPDM	
29	1	O-ring, NBR	
	1	O-ring, FPM	

* = Standard seals.

Seals in parenthesis are available.

Other parts are standard parts for SMP valves.

Recommended spare parts: Pos 12, 14, 15, 16, 17, 18, 19, 20, 22, 23, 26, 27, 28 and 29.

Not manufactured anymore

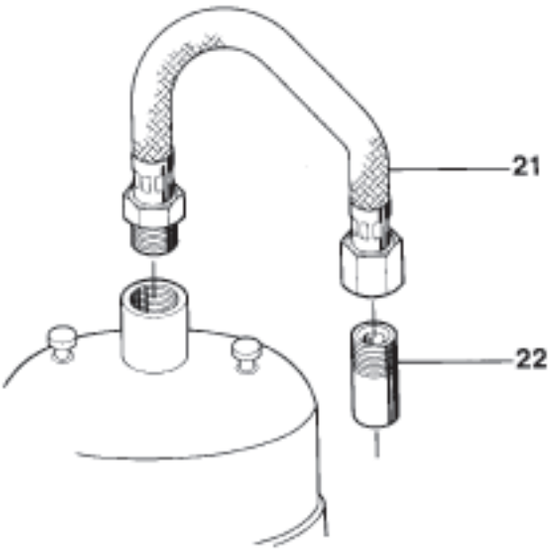

Installation Kit A

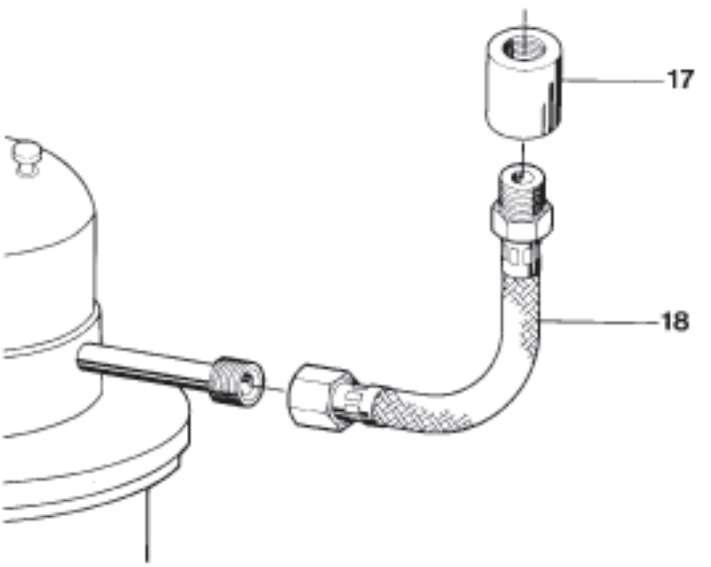

Installation Kit B

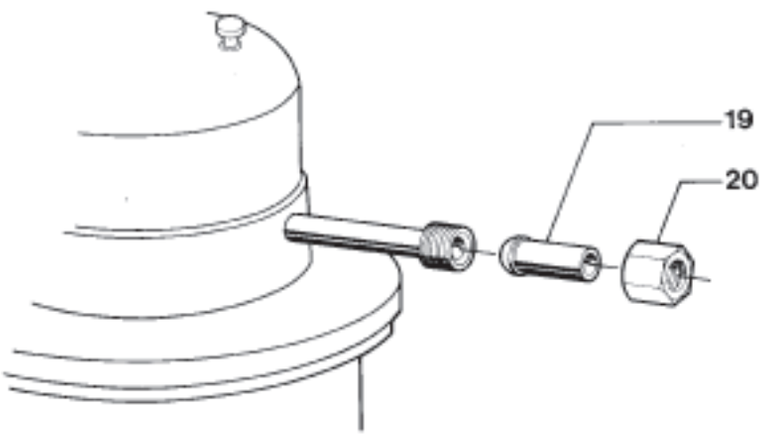

Installation Kit C



Installation Kit F

Pos	Qty	Denomination
Installation Kit A		
21	1	Hose PTFE w. s.s weave
22	1	Welding male part

Pos	Qty	Denomination	
Installation Kit B			
17	1	Welding socket	9611990917
18	1	Hose PTFE w. s.s. weave	3135707451

Pos	Qty	Denomination	
Installation Kit C			
19	1	Welding liner	3135707431
20	1	Nut	3135707441

Pos	Qty	Denomination
Installation Kit F		
23	1	Fittings PVDF female

Not manufactured anymore

1.6

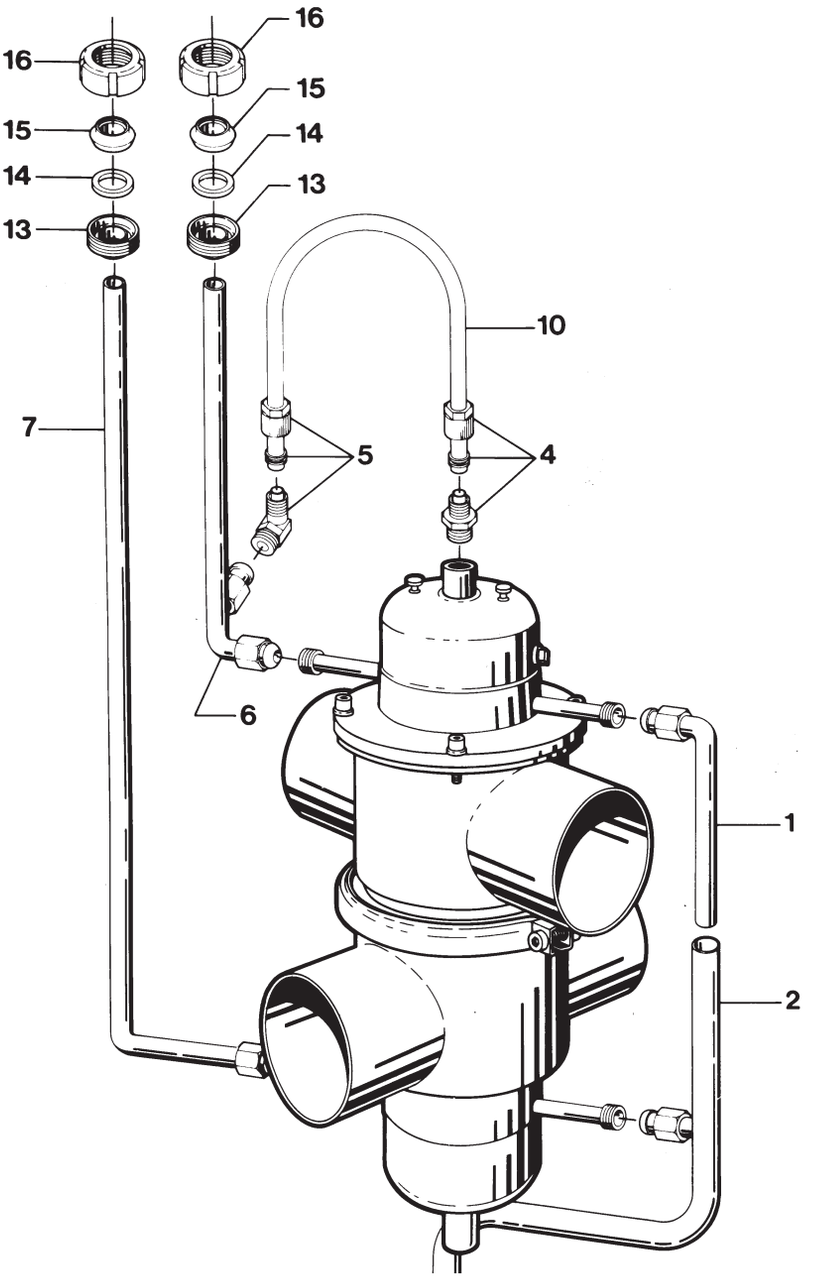

Pos	Qty	Denomination	51 - 101.6 mm NW 50 - 125	NW 150
1	1	12 mm CIP-pipe with 1 connection		3135710013
2	1	16 mm CIP-pipe with 1 connection		
4	1	Fittings PVDF male		
5	1	Fittings PVDF elbow male		
6	1	12 mm CIP-pipe with 2 connection		
7	1	12 mm CIP-pipe with 1 connection		
10	1	Tube PVDF	9611992607	9611992607
13	2	Male part DIN, NW 10	9611305900	9611305900
14	2	Packing NBR, NW10	52734601	52734601
15	2	Welding liner DIN, NW10	9611305950	9611305950
16	2	Nut, NW10	9611306420	9611306420

Not manufactured anymore

1.6

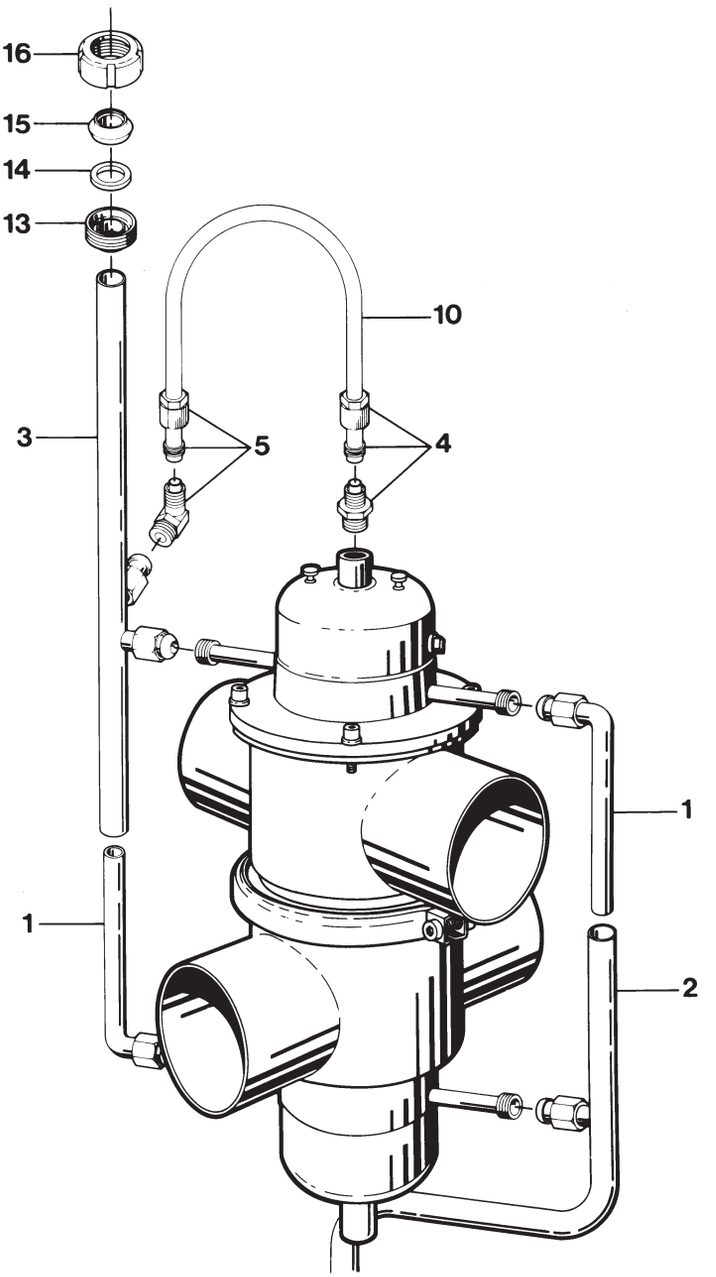

Pos	Qty	Denomination	51 - 101.6 mm NW 50 - 125	NW 150
1	2	12 mm CIP-pipe with 1 connection		3135710013
2	1	16 mm CIP-pipe with 1 connection		
3	1	16 mm CIP-pipe with 2 connection		
4	1	Fittings PVDF male		
5	1	Fittings PVDF elbow male		
10	1	Tube PVDF	9611992607	9611992607
13	1	Male part DIN, NW 15	9611305910	9611305910
14	1	Packing NBR, NW 15	52734602	52734602
15	1	Welding liner NW 15	9611305960	9611305960
16	1	Nut, NW 15	9611306430	9611306430

1.7 Double seat valves

Alfa Laval's Mixproof Valve concept offers you customized and modular solutions that exactly fit your application demands



Aseptic Mixproof Valve

Aseptic Mixproof Valve - actuators, primary valves (no seat lift) 1.7.336
Aseptic Mixproof Valve - actuators, primary valves (with seat lift) 1.7.338
Aseptic Mixproof Valve - actuators, secondary valves 1.7.340
Aseptic Mixproof Valve - plugs, primary valves 1.7.342
Aseptic Mixproof Valve - plugs, secondary valves 1.7.344
Aseptic Mixproof Valve - clamp, bonnet and body, primary valves 1.7.346
Aseptic Mixproof Valve - clamp, bonnet and body, secondary valves 1.7.348

Unique Mixproof Valve

Unique Mixproof - actuators 1.7.350
Unique Mixproof - plug setup overview and sectional drawings 1.7.354
Unique Mixproof - plug setup 1 . . . . . 1.7.360
Unique Mixproof - plug setup 2 . . . . . 1.7.364
Unique Mixproof - plug setup 3 . . . . . 1.7.368
Unique Mixproof - plug setup 4 . . . . . 1.7.372
Unique Mixproof - plug setup 5 . . . . . 1.7.376
Unique Mixproof - plug setup 6 . . . . . 1.7.380
Unique Mixproof - plug setup 7 . . . . . 1.7.384
Unique Mixproof - plug setup 8 . . . . . 1.7.388
Unique Mixproof - plug setup 9 . . . . . 1.7.392
Unique Mixproof - plug setup 10 . . . . . 1.7.396
Unique Mixproof - plug setup 11 . . . . . 1.7.400
Unique Mixproof - plug setup 12 . . . . . 1.7.404
Unique Mixproof - plug setup 13 . . . . . 1.7.408

1.7 Double seat valves

Alfa Laval's Mixproof Valve concept offers you customized and modular solutions that exactly fit your application demands

Unique Mixproof - plug setup 14 . . . . . 1.7.412
Unique Mixproof - plug setup 15 . . . . . 1.7.416
Unique Mixproof - plug setup 16 . . . . . 1.7.420
Unique Mixproof - valve bodies 1.7.424
Unique Mixproof - installation Kit B 1.7.428
Unique Mixproof - installation Kit C 1.7.430
Unique Mixproof - installation Kit G 1.7.432
Unique Mixproof - installation Kits H and B 1.7.434

Unique Mixproof 3-body
Unique Mixproof 3-body - actuator 1.7.436
Unique Mixproof 3-body - plug setup overview 1.7.438
Unique Mixproof 3-body - plug setup 23 . . . . . 1.7.440
Unique Mixproof 3-body - plug setup 25 . . . . . 1.7.444
Unique Mixproof 3-body - plug setup 31 . . . . . 1.7.448
Unique Mixproof 3-body - plug setup 33 . . . . . 1.7.452
Unique Mixproof 3-body - plug setup 37 . . . . . 1.7.456
Unique Mixproof 3-body - plug setup 39 . . . . . 1.7.462
Unique Mixproof 3-body - valve bodies 1.7.468
Unique Mixproof 3-body - Installation kit B 1.7.472
Unique Mixproof 3-body - Installation kit C 1.7.474
Unique Mixproof 3-body - Installation kit G 1.7.476
Unique Mixproof 3-body - Installation kit H + B 1.7.478

Unique PMO Mixproof (US version)
Unique PMO Mixproof 1.7.480
Rebuilding set (Unique PMO to PMO Plus CP) 1.7.486

Unique PMO Mixproof Valve, spiral clean (US version)
Unique PMO with spiral clean mixproof valve 1.7.488
Unique PMO with spiral clean mixproof valve, installation kit B 1.7.494
Unique PMO with spiral clean mixproof valve, installation kit C 1.7.496
Unique PMO with spiral clean mixproof valve, installation kit G 1.7.498
Unique PMO with spiral clean mixproof valve, installation kit H & B 1.7.500

Unique CP3 Valve (US version)
Unique CP3 - actuator 1.7.502
Unique CP3 - plug setup overview 1.7.504
Unique CP3 - plug setup 3 . . . . . 1.7.506
Unique CP3 - plug setup 4 . . . . . 1.7.510

1.7 Double seat valves

Alfa Laval's Mixproof Valve concept offers you customized and modular solutions that exactly fit your application demands

Unique CP3 - plug setup 5 . . . . . 1.7.514
Unique CP3 - plug setup 6 . . . . . 1.7.518
Unique CP3 - plug setup 11 . . . . . 1.7.522
Unique CP3 - plug setup 12 . . . . . 1.7.526
Unique CP3 - plug setup 13 . . . . . 1.7.530
Unique CP3 - plug setup 14 . . . . . 1.7.534
Unique CP3 - plug setup 17 . . . . . 1.7.538
Unique CP3 - plug setup 18 . . . . . 1.7.542
Unique CP3 - plug setup 19 (US - PMO) 1.7.546
Unique CP3 - plug setup 20 (US - PMO) 1.7.550
Unique CP3 - valve body 1.7.554

Unique Tank Outlet Valve (Unique-TO)
Unique-TO, actuator 1.7.556
Unique-TO, actuator (US version) 1.7.558
Unique-TO, plug setup 6 (tank flange) 1.7.560
Unique-TO, plug setup 6 (tank flange) (US version) 1.7.564
Unique-TO, plug setup 12 (tank flange) 1.7.568
Unique-TO, plug setup 12 (tank flange) (US version) 1.7.572
Unique-TO, plug setup 6 (stub flange) 1.7.576
Unique-TO, plug setup 6 (stub flange) (US version) 1.7.580
Unique-TO, plug setup 12 (stub flange) 1.7.584
Unique-TO, plug setup 12 (stub flange) (US version) 1.7.588
Unique-TO, valve bodies 1.7.592
Unique-TO, valve bodies (US version) 1.7.594
Unique-TO, installation kit B 1.7.596
Unique-TO, installation kit C 1.7.598
Unique-TO, installation kit G 1.7.600
Unique-TO, installation kits H and H2 . . . . . 1.7.602
Unique-TO, conversion flange 1.7.604

Unique Mixproof Large Particle Valve (Unique LP and LP-F)
Unique LP, 4" and 6", wear parts 1.7.606
Unique LP, 4" and 6", wear parts (US version) 1.7.608
Unique LP, 4", parts 1.7.610
Unique LP, 4" (US version) 1.7.612
Unique LP, 6", parts 1.7.616
Unique LP, 6" (US version) 1.7.618
Unique LP, 4" and 6", service kits 1.7.620
Unique LP, 4" and 6", service kits (US version) 1.7.622

1.7 Double seat valves

Alfa Laval's Mixproof Valve concept offers you customized and modular solutions that exactly fit your application demands

Rebuilding set (Unique LP to Unique LP-F) 1.7.624
Rebuilding set (Unique LP to Unique LP-F, (US version) 1.7.626
Unique LP and LP-F, sensor kit 1.7.628
Unique LP-F, 4" and 6", wear parts 1.7.630
Unique LP-F, 4" and 6", wear parts (US version) 1.7.632
Unique LP-F, 4", parts 1.7.634
Unique LP-F, 4", parts (US version) 1.7.636
Unique LP-F, 6", parts 1.7.642
Unique LP-F, 6", parts (US version) 1.7.644
Unique LP-F, 4" and 6", service kits 1.7.648
Unique LP-F, 4" and 6", service kits (US version) 1.7.650

Unique Mixproof Horizontal Tank Valve (Unique HT)
Unique HT, wear parts 1.7.652
Unique HT, parts 1.7.654
Unique HT, service kits 1.7.658
Unique HT, CIP validation kit 1.7.660
Unique HT, sensor kit 1.7.662

Unique PMO Plus CP Horizontal Tank Mixproof Valve (US version)
Unique PMO Plus CP Horizontal Tank Mixproof ValveD 1.7.664

Unique PMO Curd Mixproof Valve (US version)
Unique PMO Curd Mixproof Valve 1.7.670
Rebuilding set (Unique PMO Curd to Unique PMO Curd CP) 1.7.676

Unique PMO Curd CP Valve (US version)
Unique PMO Curd CP Valve 1.7.678

Unique PMO Plus Mixproof Valve (US version)
Unique PMO Plus Mixproof Valve 1.7.688
Rebuilding set (PMO Plus to PMO Plus CP) 1.7.694

Unique PMO Plus CP Mixproof Valve (US version)
Unique PMO Plus CP Mixproof Valve 1.7.696

Unique PMO Plus CP Mixproof Vertical Tank Valve (US version)
Unique PMO Plus CP Mixproof Vertical Tank Valve 1.7.702

Unique PMO-F Mixproof Valve (US version)
Unique PMO-F Mixproof Valve 1.7.708
Rebuilding set (Unique PMO-F to PMO Plus CP) 1.7.714

1.7 Double seat valves

Alfa Laval's Mixproof Valve concept offers you customized and modular solutions that exactly fit your application demands

Service tools
Unique Mixproof installation tools 1.7.716
Spares for installation tools 1.7.718

Service tools for obsolete products
AMP Aseptic Mixproof Valve, maintenance tool 1.7.720

Spare parts for obsolete products
AMP Aseptic Mixproof Valve 1.7.722

1.7

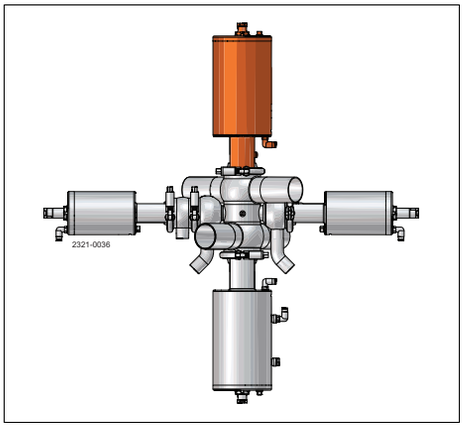

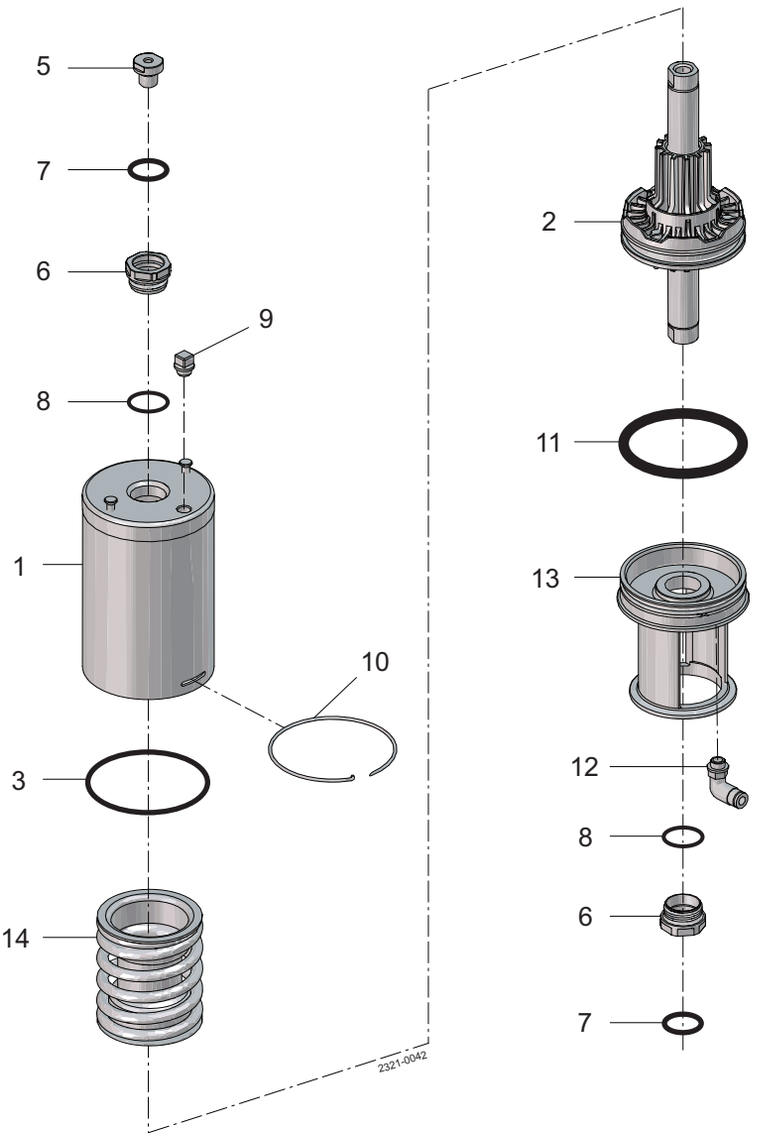

Pos		Qty	Denomination	51 mm	63.5 mm	76 mm
		1	Actuator, complete (NC)	9613185383	9613185384	9613185385
		1	Actuator, complete, US version (NC)	9613185388	9613185389	9613185390
1		1	Cylinder	9613142512	9613142512	9613142513
2		1	Piston	9613132301	9613132301	9613132401
3	□	1	O-ring			
5		1	Adapter	9615374701	9615374701	9615374701
6	□	2	Bushing			
7	□	2	O-ring			
8	□	2	O-ring			
9		1	Plug, air vent	9613414101	9613414101	9613414101
10		1	Lock wire	9613143202	9613143202	9613143203
11	□	1	O-ring			
12		1-2	Air fitting, (2 pcs. when support air is established)	9611991988	9611991988	9611991988
		1-2	Air fitting, US version (2 pcs. when support air is established)	9611994682	9611994682	9611994682
13		1	Yoke	9613154402	9613154502	9613154603
14		1	Spring assembly	9613132502	9613132502	9613132503

NOTE: Above quantities are per actuator.

		51 mm	63.5 mm	76 mm
□	**Service kit for one actuator**	**9611926498**	**9611926498**	**9611926499**

Parts marked with □ are included in the service kits (actuator).
Recommended spare parts: Service kits.

900-718

1.7

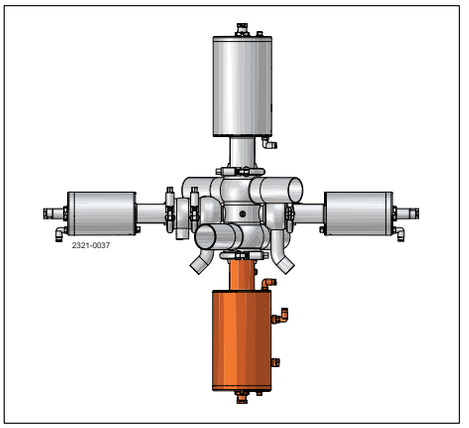
2321-0037

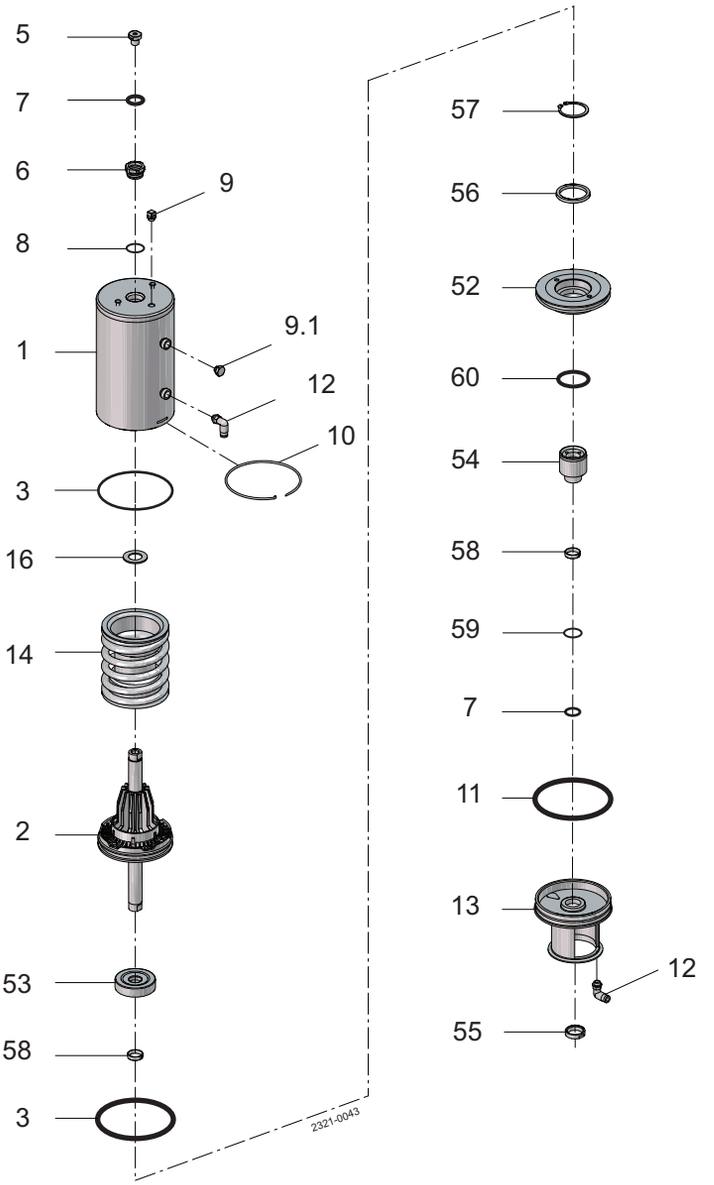
5
7
6
9
8
1
9.1
12
10
3
16
14
2
53
58
3
57
56
52
60
54
58
59
7
11
13
12
55
2321-0043

Pos		Qty	Denomination	51 mm	63.5 mm	76 mm
		1	Actuator, complete (NC) with seat lift	9613192101	9613192102	9613192103
		1	Actuator, complete (NC) with seat lift, US version	9613192105	9613192106	9613192107
1		1	Cylinder	9613167713	9613167714	9613167715
2		1	Piston	9613132304	9613132304	9613132405
3	□	2	O-ring			
5		1	Adapter, steel	9615374701	9615374701	9615374701
6	□	1	Bushing			
7	□	2	O-ring			
8	□	1	O-ring			
9		1	Plug, air vent.	9613414101	9613414101	9613414101
9.1		1	Plug	9611993709	9611993709	9611993709
10		1	Lock wire	9613143202	9613143202	9613143203
11	□	1	O-ring			
12		2-3	Air fitting, (3 pcs. when support air is established)	9611991988	9611991988	9611991988
		2-3	Air fitting, US version, (3 pcs. when support air is established)	9611994682	9611994682	9611994282
13		1	Yoke	9613154402	9613154502	9613154603
14		1	Spring assembly	9613132502	9613132502	9613132503
16	□	1	Support disc			
52		1	Piston	9613167801	9613167801	9613167901
53		1	Thrust plate	9613168201	9613168201	9613168201
54		1	Guide	9613168001	9613168001	9613168101
55		1	Nut	9613168301	9613168301	9613168301
56		3	Spacer	9613168402		
		1	Spacer		9613168401	
		1	Spacer		9613168402	
		1	Spacer			9613168405
57		1	Lock ring	51997509	51997509	51997509
58		2	Guide ring	9613008424	9613008424	9613008424
59	□	1	O-ring			
60	□	1	O-ring			

NOTE: Above quantities are per actuator.

		51 mm	63.5 mm	76 mm
□	**Service kits for one seat lift actuator**	**9611926738**	**9611926738**	**9611926739**

Parts marked with □ are included in the service kits (actuator).
Recommended spare parts: Service kits.

900-718

1.7

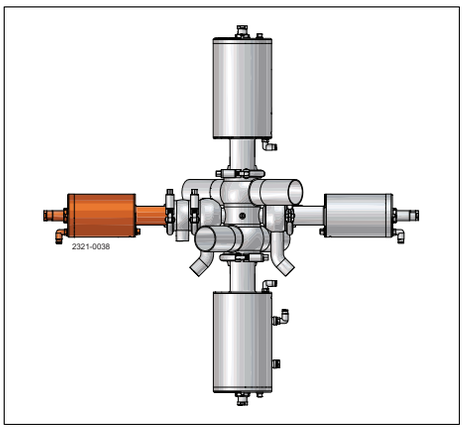

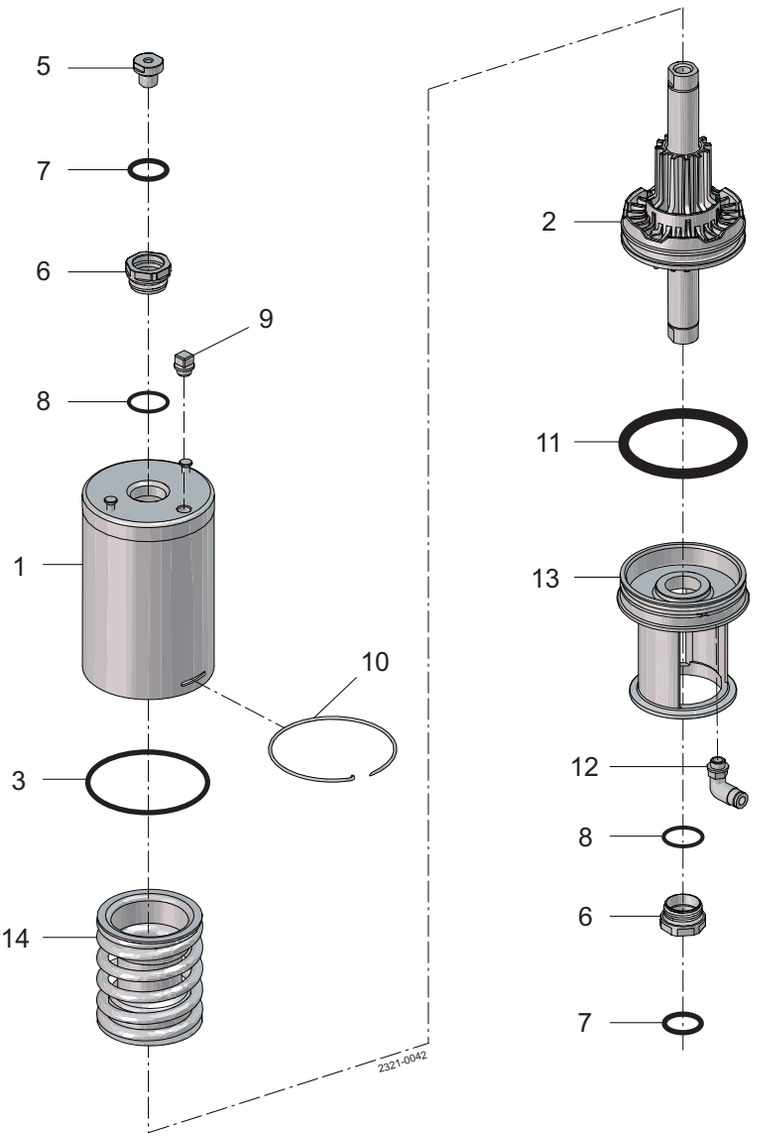

Pos		Qty	Denomination	25 mm
Secondary valves - actuator (25 mm)				
		1	Actuator, complete (NC)	9613185382
		1	Actuator, complete (NO)	9613185381
		1	Actuator, complete (NC), US version	9613185387
		1	Actuator, complete (NO), US version	9613185386
1		1	Cylinder	9613142511
2		1	Piston	9613132201
3	□	1	O-ring	
5		1	Adapter	9615374701
6	□	2	Bushing	
7	□	2	O-ring	
8	□	2	O-ring	
9		1	Plug	9613414101
10		1	Lock wire	9613143201
11	□	1	O-ring	
12		1-2	Air fitting, (2 pcs. when support air is established)	9611991988
		1-2	Air fitting, US version, (2 pcs. when support air is established)	9611994682
13		1	Yoke	9613154301
14		1	Spring assembly	9613132501

NOTE: Above quantities are per actuator.

		25 mm
□	**Service kits for one actuator NC/NO**	**9611926497**

Parts marked with □ are included in the service kits (actuator).
Recommended spare parts: service kits.

900-718

1.7

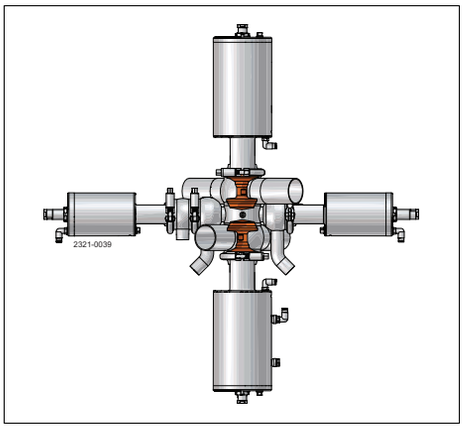

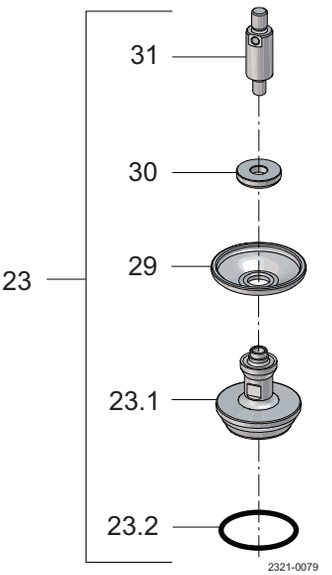

Pos	Qty	Denomination	51 mm	63.5 mm	76 mm
Aseptic plugs					
23	1	Plug, complete, EPDM (standard)	9613192201	9613192203	9613192205
	1	Plug, complete, HNBR	9613192202	9613192204	9613192206
23.1	1	Plug	9613190201	9613190203	9613190205
23.2▲	1	Plug seal, EPDM (standard)			
▲	1	Plug seal, HNBR			
	1	Plug seal, set (10 pcs.) EPDM	9614059407	9614059410	9614059413
	1	Plug seal, set (10 pcs.) HNBR	9614059408	9614059411	9614059414
29 ▲	1	Diaphragm			
	1	Diaphragm, set (10 pcs.)	9614059438	9614059439	9614059440
30	1	Disc for diaphragm	9613144101	9613144201	9613144301
31	1	Upper spindle	9613143302	9613143302	9613143301

NOTE: Above quantities are per primary actuator.

		51 mm	63.5 mm	76 mm
Service kit, product wetted parts				
▲	**Service kit for one plug, EPDM**	**9611926545**	**9611926546**	**9611926547**
▲	**Service kit for one plug, HNBR**	**9611926551**	**9611926552**	**9611926553**

900-718

1.7

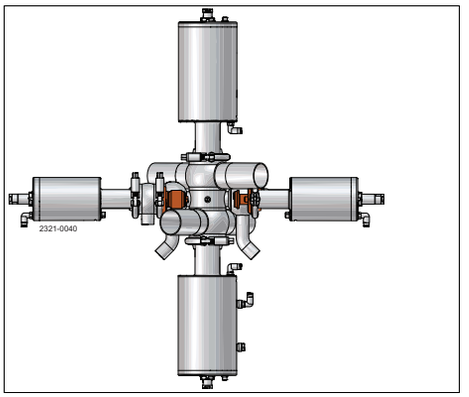

Hygienic plugs - shut-off

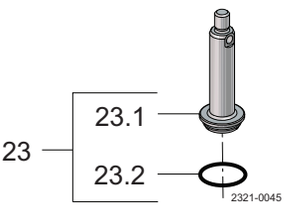

Hygienic plugs - change-over

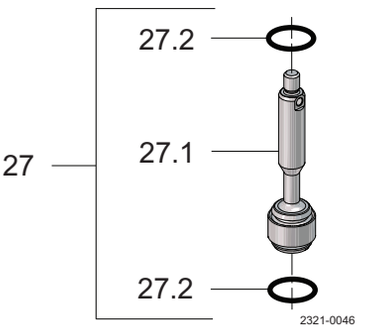

Aseptic plugs - shut-off

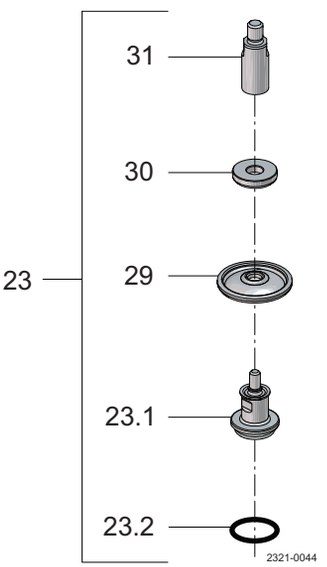

Aseptic plugs - change-over

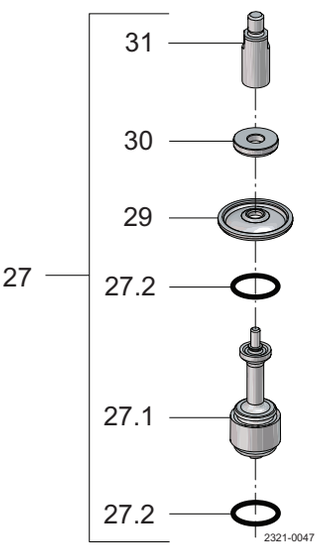

Pos	Qty	Denomination	Hygienic plugs shut-off	Hygienic plugs change-over	Aseptic plugs shut-off	Aseptic plugs change-over
Secondary valve plugs (25 mm)						
23	1	Plug, complete, shut-off, EPDM (standard)	9613192301		9613192401	
	1	Plug, complete, shut-off, HNBR	9613192302		9613192402	
23.1	1	Plug, shut-off	9613149603		9613143503	
23.2▲	1	Plug seal, EPDM (standard)				
▲	1	Plug seal, HNBR				
	1	Plug seal, set (10 pcs.), EPDM	9614059401		9614059401	
	1	Plug seal, set (10 pcs.), HNBR	9614059402		9614059402	
27	1	Plug, complete, change-over, EPDM (standard)		9613192303		9613192403
	1	Plug, complete, change-over, HNBR		9613192304		9613192404
27.1	1	Plug, change-over		9613149703		9613143603
27.2▲	2	Plug seal, EPDM (standard)				
▲	2	Plug seal, HNBR				
	1	Plug seal, set (10 pcs.), EPDM		9614059401		9614059401
	1	Plug seal, set (10 pcs.), HNBR		9614059402		9614059402
29 ▲	1	Diaphragm				
	1	Diaphragm, set (10 pcs.)			9614059437	9614059437
30	1	Disc for diaphragm			9613144001	9613144001
31	1	Upper spindle			9613144601	9613144601

NOTE: Above quantities are per secondary actuator.

		Hygienic plugs shut-off	Hygienic plugs change-over	Aseptic plugs shut-off	Aseptic plugs change-over
▲	**Service kit for one plug, EPDM**	9611926501	9611926579	9611926543	9611926615
▲	**Service kit for one plug, HNBR**	9611926507	9611926585	9611926549	9611926621

Parts marked with ▲ are included in the service kits (product wetted parts).
Recommended spare parts: Service kits.

900-718

1.7

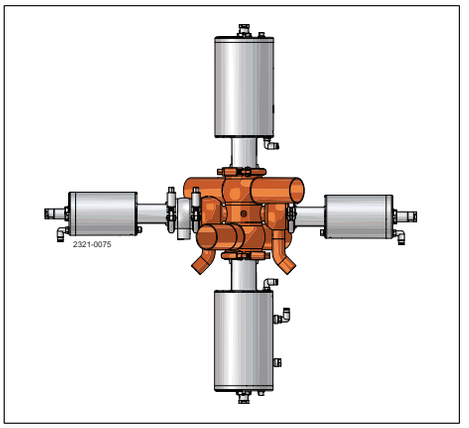

Vertical mount

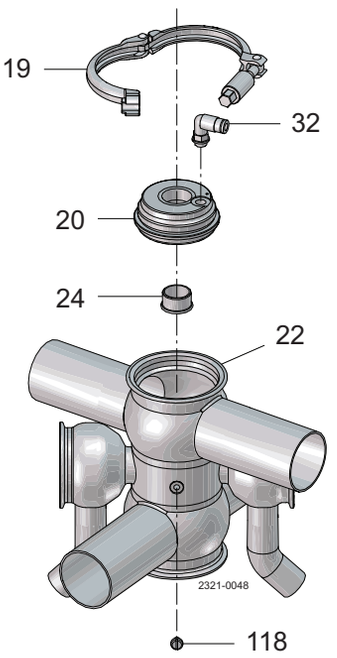

Horizontal mount

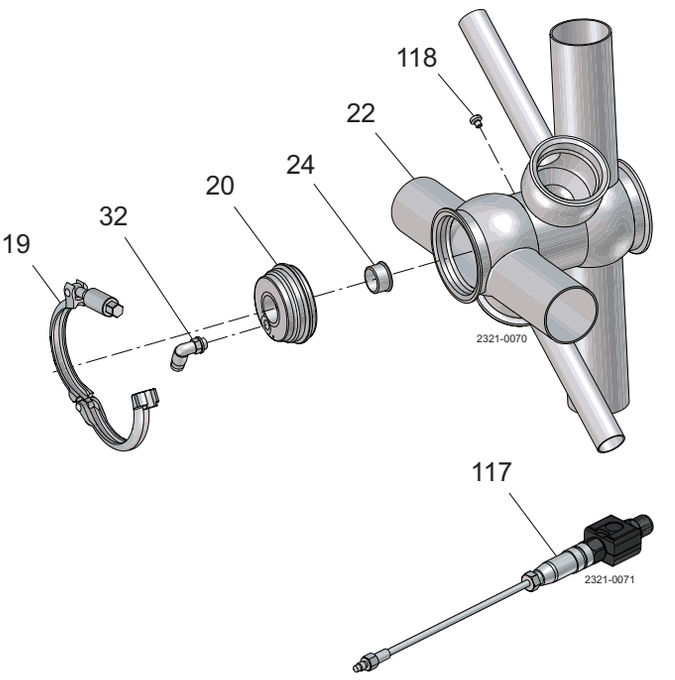

Pos	Qty	Denomination	51 mm	63.5 mm	76 mm
Clamp					
19	2	Clamp	9612939304	9612939305	9612939306
Bonnet					
20	2	Bonnet	9613142801	9613142901	9613143001
24 ▲	2	Bushing	9613125002	9613125002	9613125002
32	2	Air fitting	9611991988	9611991988	9611991988
	2	Air fitting, US version	9611994682	9611994682	9611994682
Valve body					
22	1	Valve body, (vertical mounting)	9613190301	9613190401	9613190501
	1	Valve body, (horizontal mounting)	9613191101	9613191201	9613191301
117	(1)	Temperature sensor + transmitter (accessories)	9613191501	9613191501	9613191501
	(1)	Temperature sensor (accessories)	9613191601	9613191601	9613191601
	(1)	Transmitter (accessories)	9613191701	9613191701	9613191701
	(1)	Temperature sensor + transmitter w. individual certificates (accessories)	9613191801	9613191801	9613191801
	(1)	Temperature sensor w. individual certificate (accessories)	9613191901	9613191901	9613191901
	(1)	Transmitter w. individual certificate (accessories)	9613192001	9613192001	9613192001
118	1	Screw	9611996096	9611996096	9611996096

Parts marked with ▲ are included in the service kits (product wetted parts)

900-718

1.7

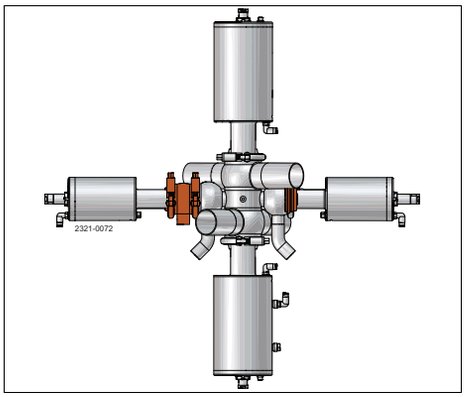

Hygienic

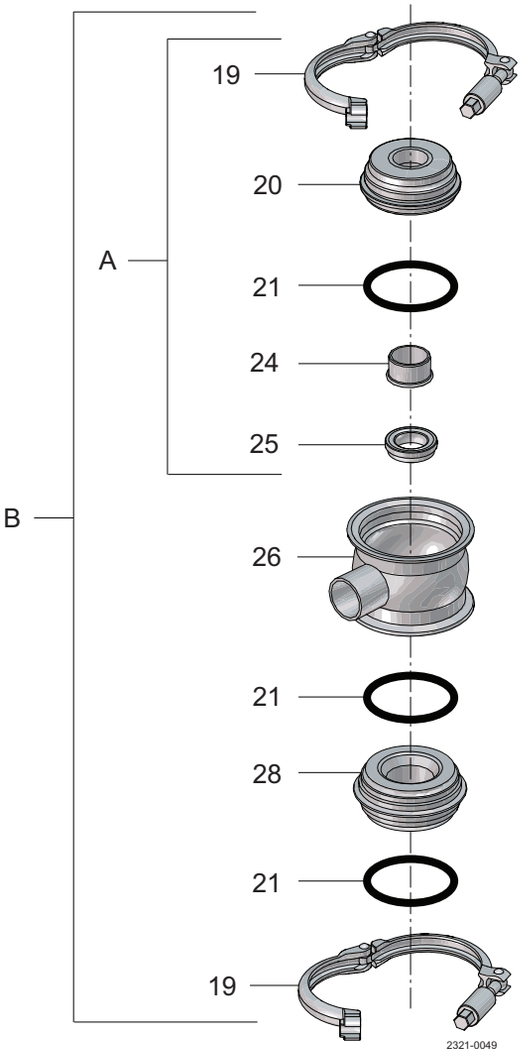

Aseptic

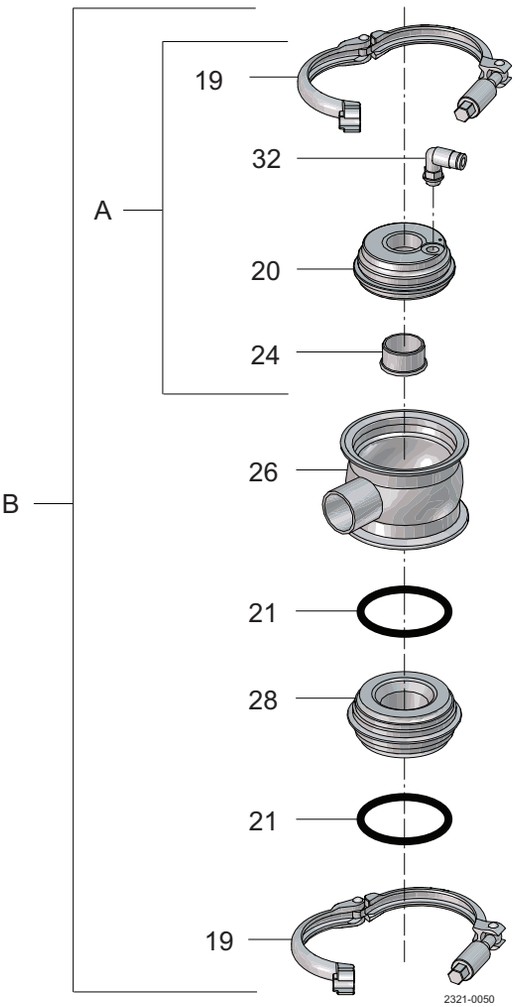

A = Shut-off, B = Change-over

Pos	Qty	Denomination	Hygienic plugs shut-off	Hygienic plugs change-over	Aseptic plugs shut-off	Aseptic plugs change-over
Clamp						
19	2	Clamp	9612939303		9612939303	
	3	Clamp, (when secondary valves are one change-over + one shut-off)		9612939303		9612939303
Bonnet						
20	2	Bonnet	9613127102	9613127102		
	2	Bonnet, aseptic			9613142701	9613142701
21	2	O-ring, EPDM (standard)				
	2	O-ring, HNBR				
	4	O-ring, EPDM (standard)*				
	4	O-ring, HNBR*				
	1	O-ring, set (10 pcs.) EPDM (standard)	9614059422	9614059422		9614059422
	1	O-ring, set (10 pcs.) HNBR	9614059423	9614059423		9614059423
24	2	Bushing	9613125002	9613125002	9613125002	9613125002
25	2	Lip seal, EPDM (standard)**				
	2	Lip seal, HNBR				
	1	Lip seal, set (10 pcs.) EPDM	9614059419	9614059419		
	1	Lip seal, set (10 pcs.) HNBR*	9614059420	9614059420		
32	2	Air fitting			9611994877	9611994877
Valve body						
26	1	Valve body, upper, 1 port		9613139301		9613139301
Seat						
28	1	Seat		9613127501		9613127501

Parts marked with are included in the service kits (product wetted parts)

* = applies to hygienic, change-over valve

** = applies to hygienic.

900-718

1.7

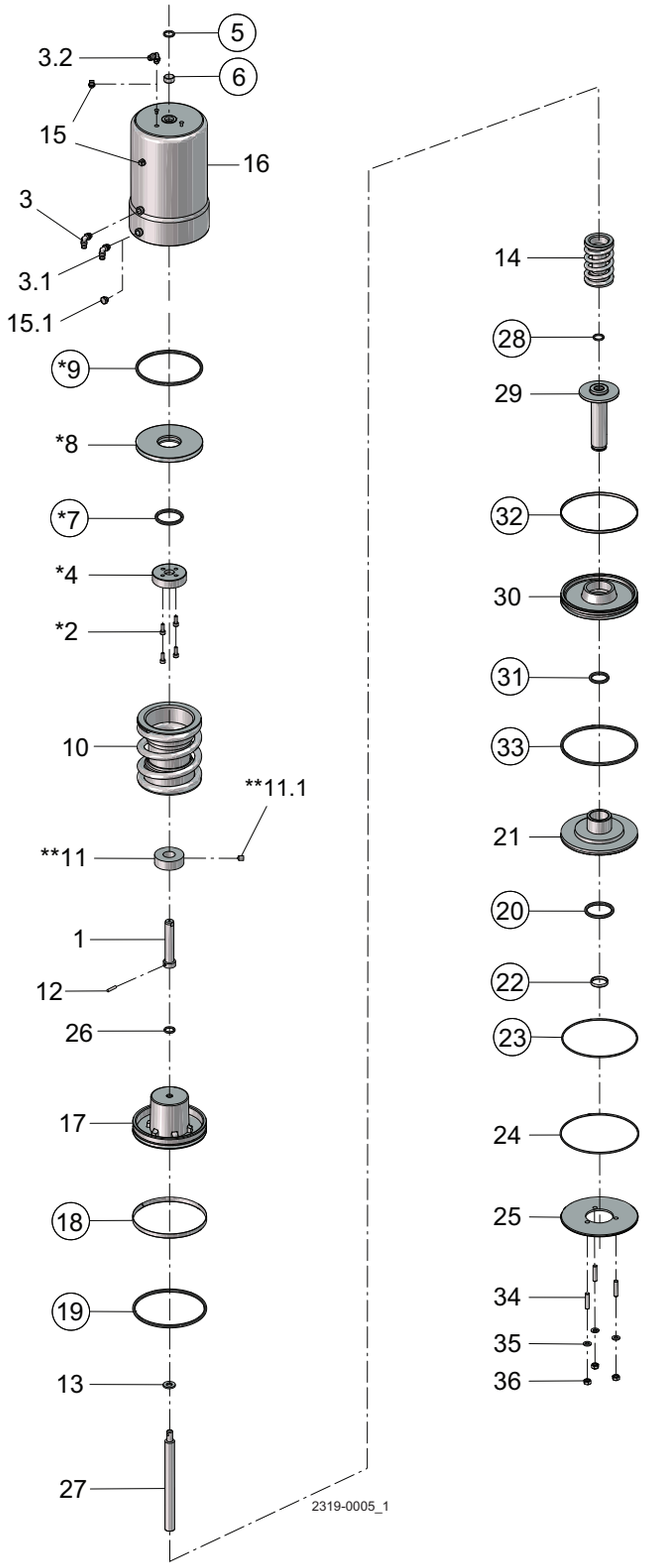

◯ = acuator service kit
* = not used in actuator 1½" - 2"
** = not used in actuator 2½", 3", 4 and 6"

Pos		Qty	Denomination	DN/OD 38 DN40 Seat ø53.3	DN/OD 51 DN 50 Seat ø53.3	DN/OD 63.5 DN 65 DN/OD 76.1 DN 80 Seat ø81.3	DN/OD 63.5 DN 65 DN/OD 76.1 DN 80 Seat ø81.3 (Unbalanced lower plug)
1		1	Upper stem	9613010102	9613010102	9613007401	9613007402
2		4	Screw			9611993342	9611993342
3		1	Air fitting	9611991988	9611991988	9611991988	9611991988
3.1		1	Air fitting	9611991988	9611991988	9611991988	9611991988
3.2		1	Air fitting	9611991988	9611991988	9611991988	9611991988
4		1	Stop for upper piston			9613005301	9613005302
5	□	1	O-ring, NBR	9611993499	9611993499	9611993499	9611993499
6	□	1	Guide ring, Turcite	9613008408	9613008408	9613008408	9613008408
7	□	1	O-ring, NBR			9611993514	9611993514
8		1	Upper piston			9613005601	9613005602
9	□	1	O-ring, NBR			9611993512	9611993513
10		1	Spring assembly	9613012501	9613012501	9613007501	9613025602
11		1	Distance spacer	9613010202	9613010202		9613010204
11.1		1	Screw	9611991763	9611991763		
12		1	Pin	9611994197	9611994197	9611994198	9611994199
13		1	Washer	9611993594	9611993594	9611993595	9611993596
14		1	Spring assembly	9613013101	9613013101	9613009502	9613009502
15		1	Plug	9613414101	9613414101	9613414101	9613414101
15.1		1	Plug	9611993709	9611993709	9611993709	9611993709
17		1	Main piston	9613013201	9613013201	9613005701	9613015901
18	□	1	Guide ring, Turcite	9613008409	9613008409	9613008410	9613008411
19	□	1	O-ring, NBR	9611993505	9611993505	9611993507	9611993509
20	□	1	O-ring, NBR	9611993503	9611993503	9611993607	9611993607
21		1	Bottom	9613014001	9613014001	9613005401	9613016801
22	□	1	Guide ring, Turcite	9613008403	9613008403	9613008404	9613008404
23	□	1	O-ring, NBR	9611992228	9611992228	9611991489	22340675
24		1	Retaining ring	9613024802	9613024802	9613024803	9613024804
25		1	Cover disk	9613005802	9613005802	9613005803	9613005804
26		1	O-ring, NBR	9611993528	9611993528	9611993495	9611993530
27		1	Inner stem	9613010602	9613010602	9613007301	9613007304
28	□	1	O-ring	9611993495	9611993495	9611990030	9611990030
29		1	Piston rod	9613013401	9613013401	9613006001	9613006001
30		1	Lower piston	9613013801	9613013801	9613005501	9613016601
31	□	1	O-ring, NBR	42153	42153	42153	42153
32	□	1	Guide ring, Turcite	9613008405	9613008405	9613008406	9613008407
33	□	1	O-ring, NBR	22341275	22341275	9611993508	9611993510
34		3	Bolt	9611993618	9611993618	9611993618	9611993618
35		3	Washer	9611993594	9611993594	9611993594	9611993594
36		3	Nut	9611990360	9611990360	9611990360	9611990360

		DN/OD 38 DN40 Seat ø53.3	DN/OD 51 DN 50 Seat ø53.3	DN/OD 63.5 DN 65 DN/OD 76.1 DN 80 Seat ø81.3	DN/OD 63.5 DN 65 DN/OD 76.1 DN 80 Seat ø81.3 (Unbalanced lower plug)
□	**Actuator service kit**	**9611926414**	**9611926414**	**9611926415**	**9611926416**

Parts marked with □ are included in the service kit.

1.7

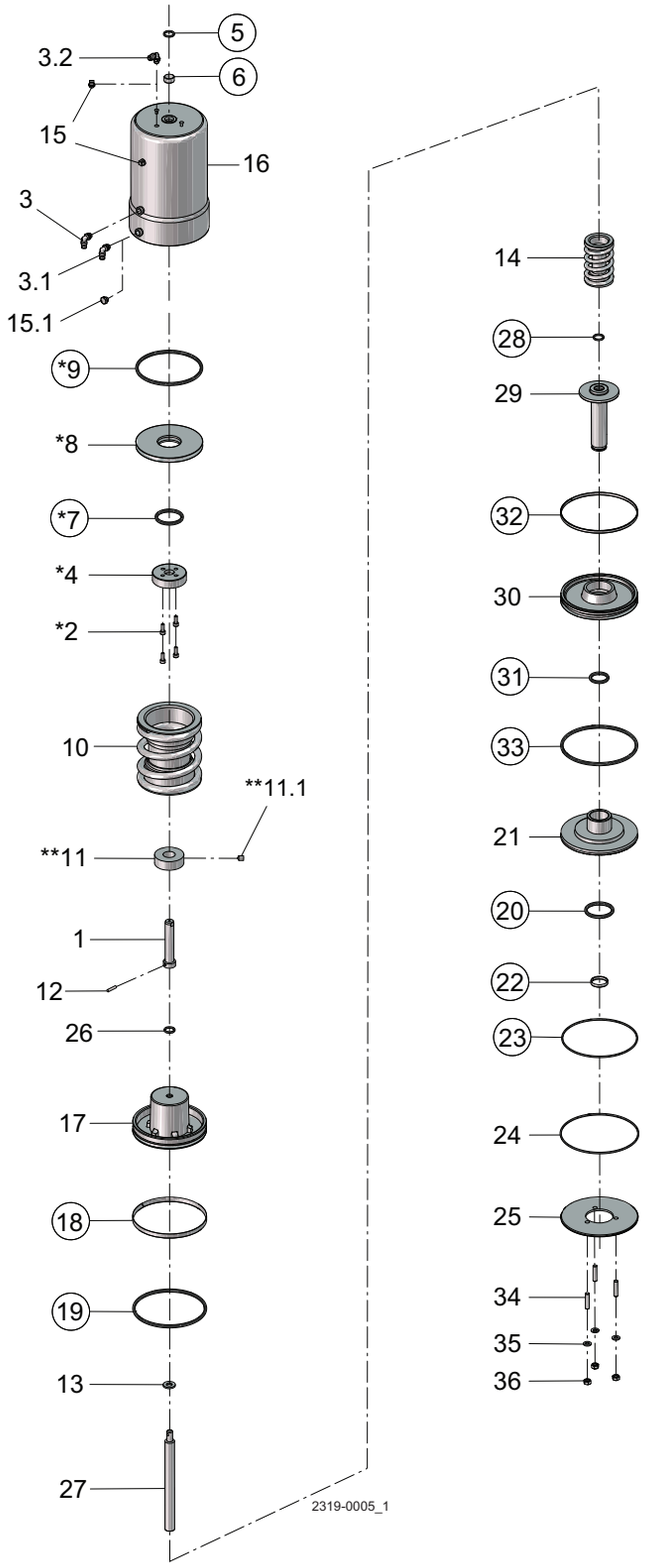

◯ = acuator service kit
* = not used in actuator 1½" - 2"
** = not used in actuator 2½", 3", 4 and 6"

Pos		Qty	Denomination	#2 DN/OD 101.6 DN 100 Seat ø100.3	#2 DN/OD 101.6 DN 100 Seat ø100.3 unbalanced lower plug	#1 DN/OD 101.6 DN 100 Seat ø115.3	#1 DN/OD 101.6 DN 100 Seat ø115.3 unbalanced lower plug	DN 125 DN 150 Seat ø115.3	DN 125 DN 150 Seat ø115.3 unbalanced lower plug
1		1	Upper stem	9613007402	9613007404	9613007402	9613007404	9613007402	9613007404
2		4	Screw	9611993342	9611993342	9611993342	9611993342	9611993342	9611993342
3		1	Air fitting	9611991988	9611991988	9611991988	9611991988	9611991988	9611991988
3.1		1	Air fitting	9611991988	9611991988	9611991988	9611991988	9611991988	9611991988
3.2		1	Air fitting	9611991988	9611991988	9611991988	9611991988	9611991988	9611991988
4		1	Stop for upper piston	9613005302	9613005302	9613005302	9613005302	9613005302	9613005302
5	□	1	O-ring, NBR	9611993499	9611993499	9611993499	9611993499	9611993499	9611993499
6		1	Guide ring, Turcite	9613008408	9613008408	9613008408	9613008408	9613008408	9613008408
7	□	1	O-ring, NBR	9611993514	9611993514	9611993514	9611993514	9611993514	9611993514
8		1	Upper piston	9613005602	9613005602	9613005602	9613005602	9613005602	9613005602
9	□	1	O-ring, NBR	9611993513	9611993513	9611993513	9611993513	9611993513	9611993513
10		1	Spring assembly	9613025603	9613025601	9613025603	9613025601	9613025603	9613025601
11		1	Distance spacer		9613010207		9613010207		9613010207
12		1	Pin	9611994199	9611994199	9611994199	9611994199	9611994199	9611994199
13		1	Washer	9611993596	9611993596	9611993596	9611993596	9611993596	9611993596
14		1	Spring assembly	9613009502	9613009502	9613009502	9613009502	9613009502	9613009502
15		1	Plug	9613414101	9613414101	9613414101	9613414101	9613414101	9613414101
15.1		1	Plug	9611993709	9611993709	9611993709	9611993709	9611993709	9611993709
17		1	Main piston	9613015901	9613015901	9613015901	9613015901	9613015901	9613015901
18		1	Guide ring, Turcite	9613008411	9613008411	9613008411	9613008411	9613008411	9613008411
19	□	1	O-ring, NBR	9611993509	9611993509	9611993509	9611993509	9611993509	9611993509
20	□	1	O-ring, NBR	9611993607	9611993607	9611993607	9611993607	9611993607	9611993607
21		1	Bottom	9613016801	9613016801	9613016801	9613016801	9613016801	9613016801
22		1	Guide ring, Turcite	9613008404	9613008404	9613008404	9613008404	9613008404	9613008404
23	□	1	O-ring, NBR	22340675	22340675	22340675	22340675	22340675	22340675
24		1	Retaining ring	9613024804	9613024804	9613024804	9613024804	9613024804	9613024804
25		1	Cover disk	9613005804	9613005804	9613005804	9613005804	9613005804	9613005804
26		1	O-ring, NBR	9611993530	9611993530	9611993530	9611993530	9611993530	9611993530
27		1	Inner stem	9613007302	9613007302	9613007302	9613007302	9613007302	9613007302
28	□	1	O-ring	9611990030	9611990030	9611990030	9611990030	9611990030	9611990030
29		1	Piston rod	9613006002	9613006002	9613006002	9613006002	9613006002	9613006002
30		1	Lower piston	9613016601	9613016601	9613016601	9613016601	9613016601	9613016601
31	□	1	O-ring, NBR	42153	42153	42153	42153	42153	42153
32		1	Guide ring, Turcite	9613008407	9613008407	9613008407	9613008407	9613008407	9613008407
33	□	1	O-ring, NBR	9611993510	9611993510	9611993510	9611993510	9611993510	9611993510
34		3	Bolt	9611993618	9611993618	9611993618	9611993618	9611993618	9611993618
35		3	Washer	9611993594	9611993594	9611993594	9611993594	9611993594	9611993594
36		3	Nut	9611990360	9611990360	9611990360	9611990360	9611990360	9611990360

		#2 DN/OD 101.6 DN 100 Seat ø100.3	#2 DN/OD 101.6 DN 100 Seat ø100.3 unbalanced lower plug	#1 DN/OD 101.6 DN 100 Seat ø115.3	#1 DN/OD 101.6 DN 100 Seat ø115.3 unbalanced lower plug	DN 125 DN 150 Seat ø115.3	DN 125 DN 150 Seat ø115.3 unbalanced lower plug
□	Actuator service kits	9611926416	9611926416	9611926416	9611926416	9611926416	9611926416

Parts marked with □ are included in the service kit.

#1 = Serial no. below 1030000 - manufactured before October 1st 2003

#2 = Serial no. above 1030000 - manufactured after October 1st 2003

Plug setup 1

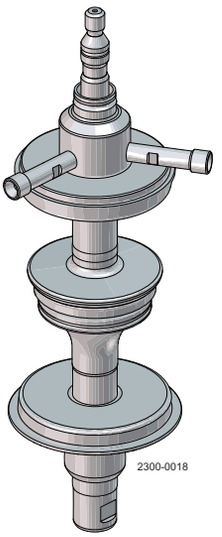

Upper: Unbalanced with CIP OD spindle
Lower: Unbalanced

Go to plug setup 1 - click here

Plug setup 2

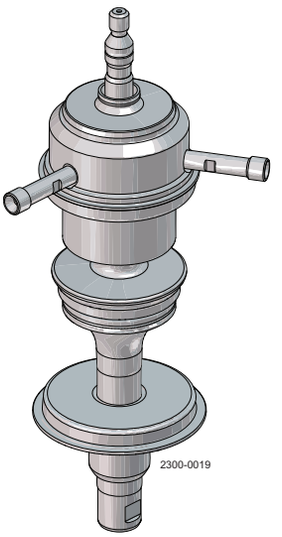

Upper: Balanced with CIP OD balancer
Lower: Unbalanced

Go to plug setup 2 - click here

Plug setup 3

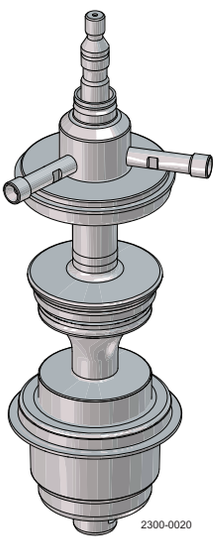

Upper: Unbalanced with CIP OD spindle
Lower: Balanced (blue bottom)

Go to plug setup 3 - click here

Plug setup 4

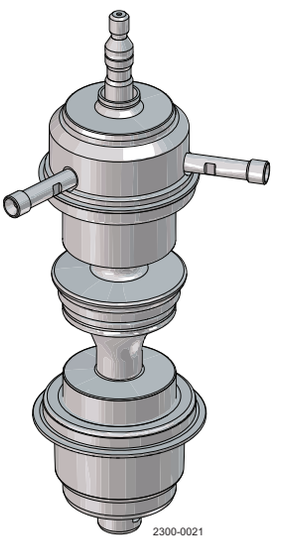

Upper: Balanced with CIP OD balancer
Lower: Balanced (blue bottom)

Go to plug setup 4 - click here

Plug setup 5

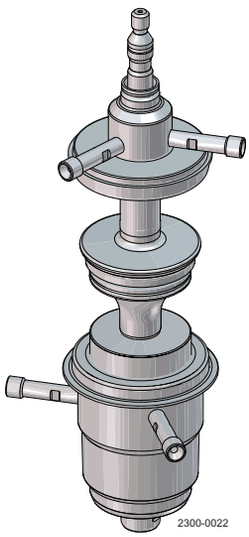

Upper: Unbalanced with CIP OD spindle
Lower: Balanced with CIP OD balancer (blue bottom)

Go to plug setup 5 - click here

Plug setup 6

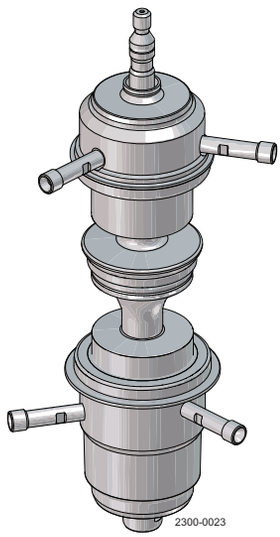

Upper: Balanced with CIP OD balancer
Lower: Balanced with CIP OD balancer (blue bottom)

Go to plug setup 6 - click here

Plug setup 7

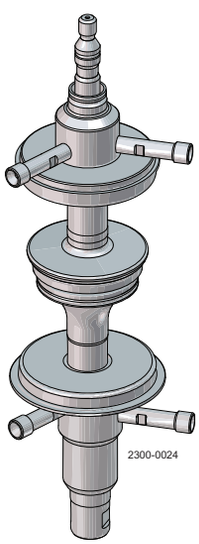

Upper: Unbalanced with CIP OD spindle
Lower: Unbalanced with CIP OD spindle

Go to plug setup 7 - click here

Plug setup 8

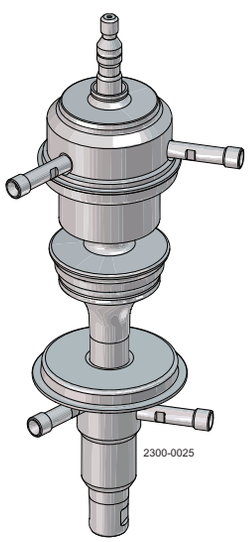

Upper: Balanced with CIP OD balancer
Lower: Unbalanced with CIP OD spindle

Go to plug setup 8 - click here

Plug setup 9

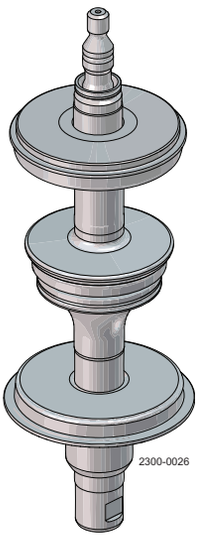

Upper: Unbalanced
Lower: Unbalanced

Go to plug setup 9 - click here

Plug setup 10

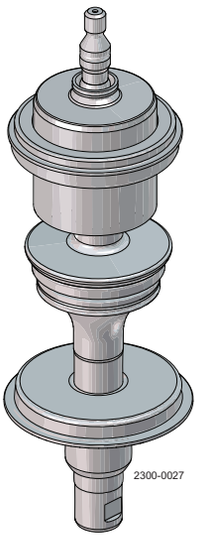

Upper: Balanced
Lower: Unbalanced

Go to plug setup 10 - click here

Plug setup 11

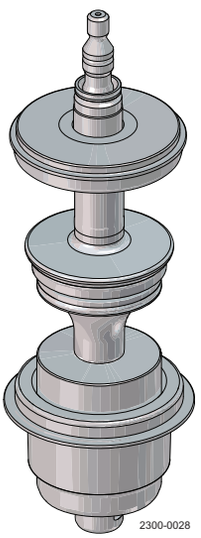

Upper: Unbalanced
Lower: Balanced (blue bottom)

Go to plug setup 11 - click here

Plug setup 12

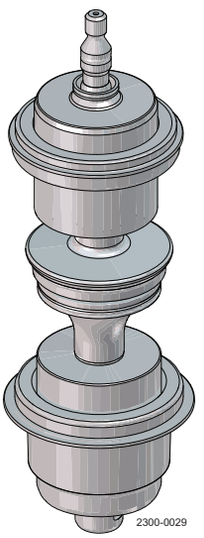

Upper: Balanced
Lower: Balanced (blue bottom)

Go to plug setup 12 - click here

Plug setup 13

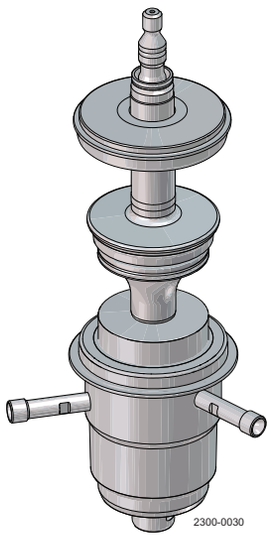

Upper: Unbalanced
Lower: Balanced with CIP OD balancer (blue bottom)

Go to plug setup 13 - click here

Plug setup 14

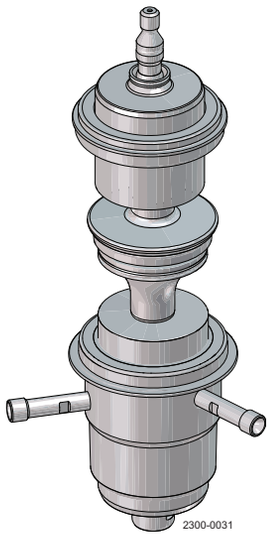

Upper: Balanced
Lower: Balanced with CIP OD balancer (blue bottom)

Go to plug setup 14 - click here

Plug setup 15

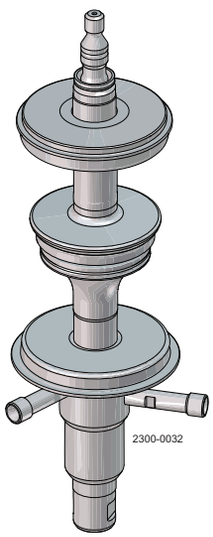

Upper: Unbalanced
Lower: Unbalanced with CIP OD spindle

Go to plug setup 15 - click here

Plug setup 16

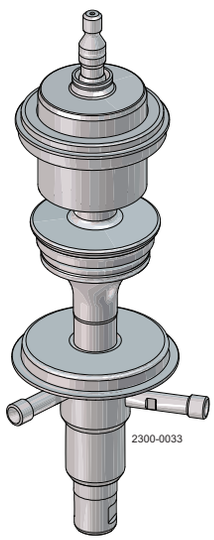

Upper: Balanced
Lower: Unbalanced with CIP OD spindle

Go to plug setup 16 - click here

1.7

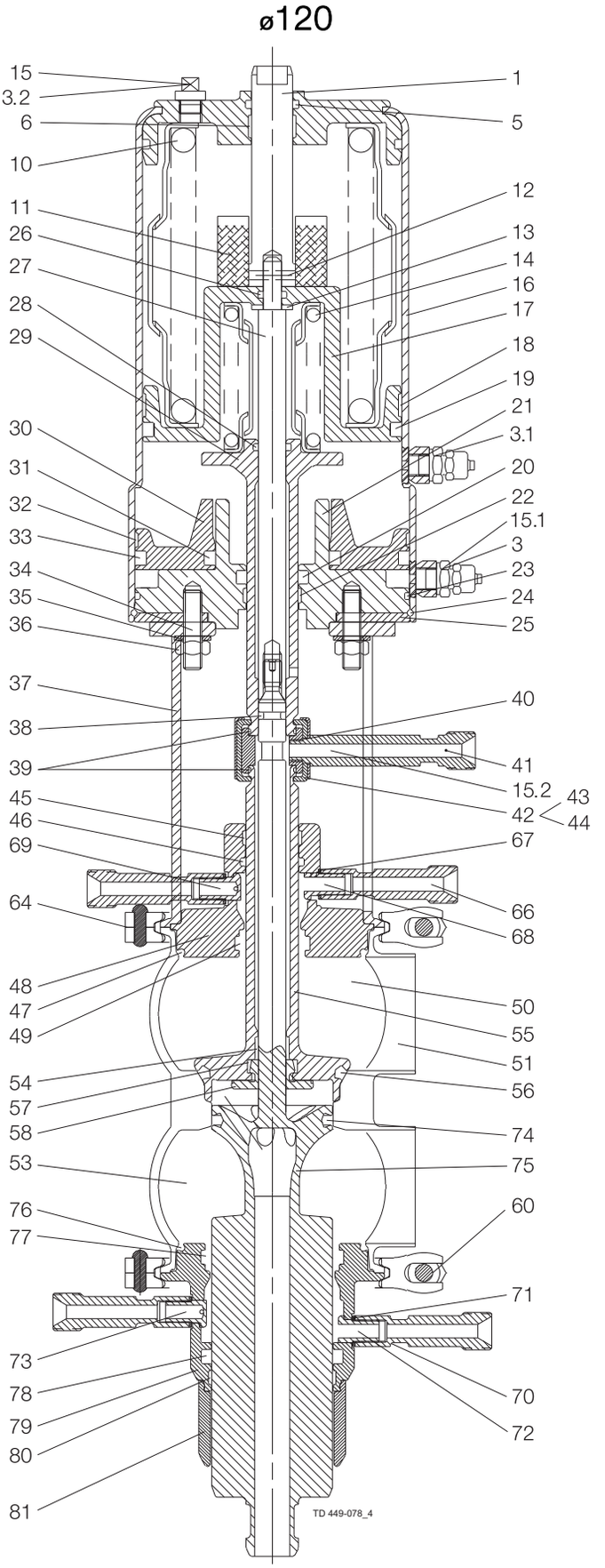
ø120
15
3.2
6
10
11
26
27
28
29
30
31
32
33
34
35
36
37
38
39
45
46
69
64
48
47
49
54
57
58
53
76
77
73
78
79
80
81
1
5
12
13
14
16
17
18
19
21
3.1
20
22
15.1
3
23
24
25
40
41
15.2
42
43
44
67
66
68
50
55
51
56
74
75
60
71
70
72
TD 449-078_4

ø157/Ø186

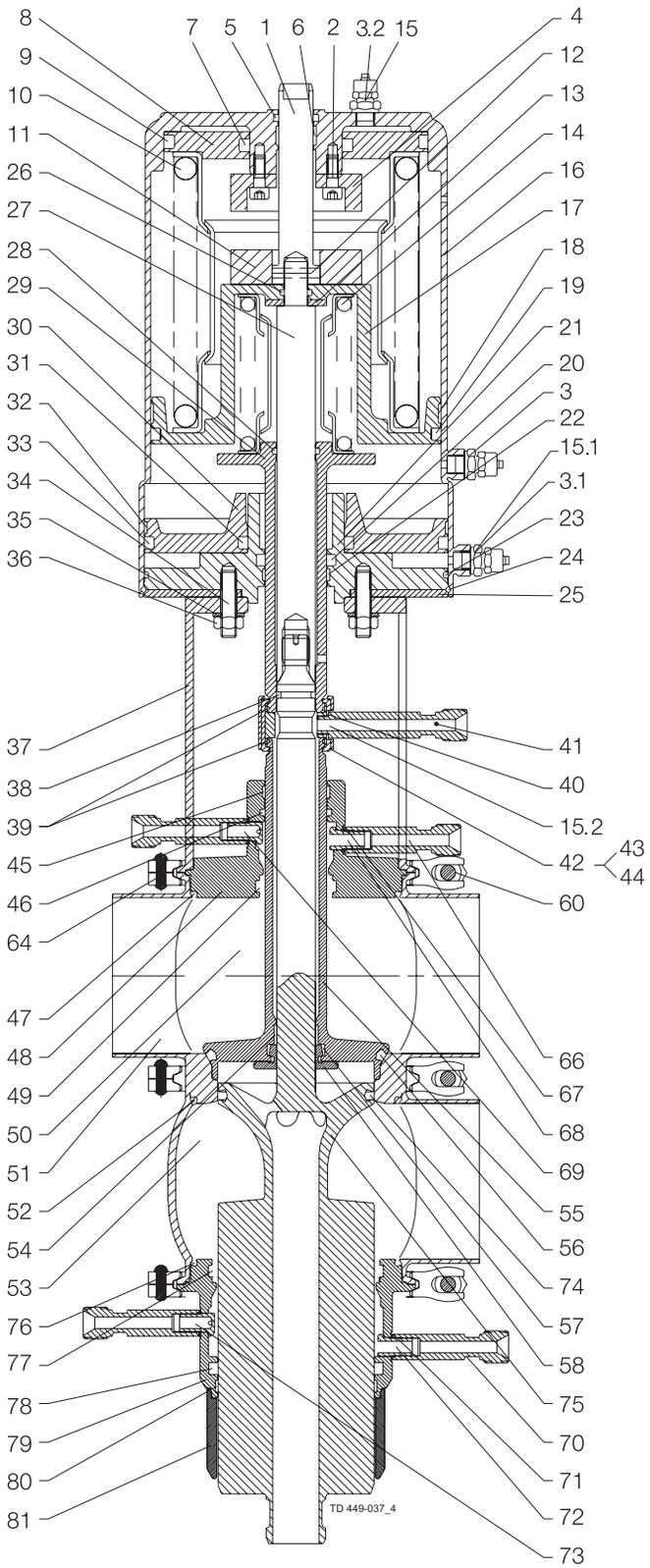
8
9
10
11
26
27
28
29
30
31
32
33
34
35
36
37
38
39
45
46
64
47
48
49
50
51
52
54
53
76
77
78
79
80
81
7
5
1
6
2
3.2
15
4
12
13
14
16
17
18
19
21
20
3
22
15.1
3.1
23
24
25
41
40
15.2
42
43
44
60
66
67
68
69
55
56
74
57
58
75
70
71
72
73
TD 449-037_4

1.7

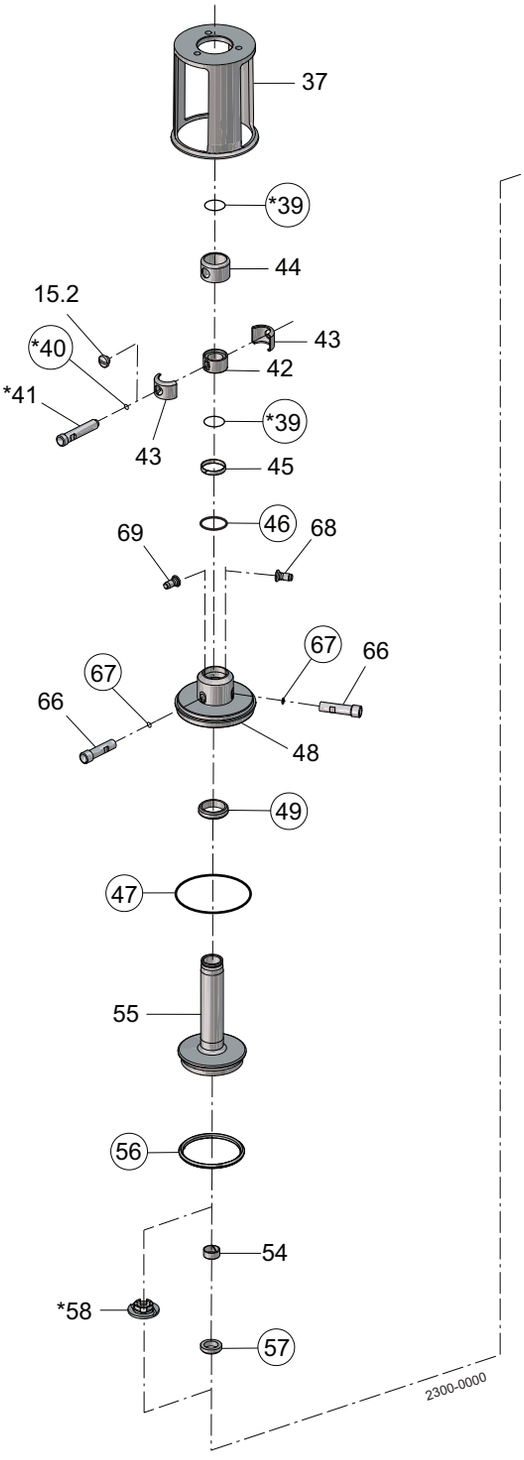

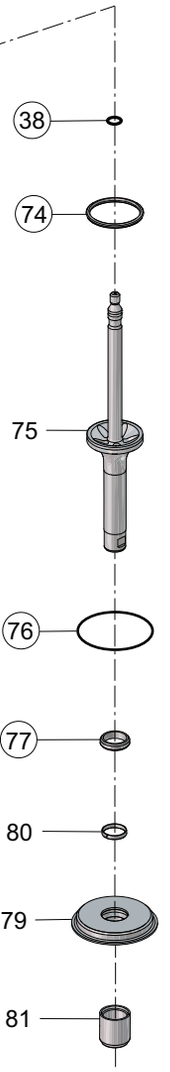

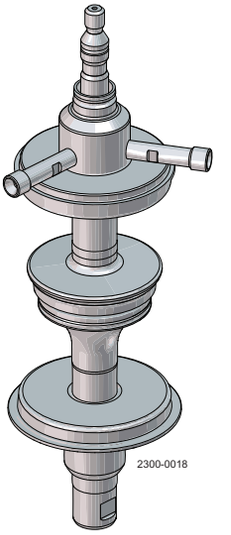

◯ = wear parts
★ = with SpiralClean in leakage chamber

Pos. 37, see section
See note below service kits.

Pos		Qty	Denomination	DN/OD 51 DN 50 Seat ø53.3	DN/OD 63.5 DN/OD 76.1 DN 65/DN 80 Seat ø81.3	#2 DN/OD 101.6 DN 100 Seat ø100.3	#1 DN/OD 101.6 DN 100 Seat ø115.3	DN 125 DN 150 Seat ø115.3
Spindle liner								
15		1	Plug	9613414101	9613414101	9613414101	9613414101	9613414101
42		1	Spindle liner	9613011601	9613009001	9613009001	9613009001	9613009001
43		2	Clamp	9613011801	9613009201	9613009201	9613009201	9613009201
44		1	Lock	9613011701	9613009101	9613009101	9613009101	9613009101
Extra parts if SpiralClean in vent cavity								
39		2	O-ring, EPDM	9611993492	9611993493	9611993493	9611993493	9611993493
40		1	O-ring, EPDM	9611993119	9611993119	9611993119	9611993119	9611993119
41		1	Flushing tube	3135710172	3135710172	3135710172	3135710172	3135710172
58		1	Spray nozzle, PVDF	9613008801	9613014801	9613014801	9613014801	9613014801
Upper sealing element								
45		1	Guide ring, PTFE	9613008416	9613008417	9613008417	9613008417	9613008417
46	♦	1	O-ring, EPDM	9611993653	9611993654	9611993654	9611993654	9611993654
47	♦	1	O-ring, EPDM	9611993632	9611993636	9611993640	9611993640	9611993644
	♦	1	O-ring, NBR	9611993633	9611993637	9611993641	9611993641	9611993645
	♦	1	O-ring, FPM	9611993634	9611993638	9611993642	9611993642	9611993646
	♦	1	O-ring, HNBR	9611993635	9611993639	9611993643	9611993643	9611993647
48		1	Upper sealing element	9613014301	9613006501	9613018901	9613018901	9613017101
49	♦	1	Lip seal, EPDM	9613008501	9613008511	9613008511	9613008511	9613008511
	♦	1	Lip seal, NBR	9613008502	9613008512	9613008512	9613008512	9613008512
	♦	1	Lip seal, FPM	9613008503	9613008513	9613008513	9613008513	9613008513
	♦	1	Lip seal, HNBR	9613008504	9613008514	9613008514	9613008514	9613008514
66		2	Flushing tube	9613007902	9613007903	9613007904	9613007904	9613007905
67	♦	2	O-ring, EPDM	9611993119	9611993119	9611993119	9611993119	9611993119
68		1	Drain	9613008001	9613008001	9613008001	9613008001	9613008001
69		1	Nozzle	9613008002	9613008002	9613008002	9613008002	9613008002
Upper plug								
54		1	Guide ring, PTFE	9613008401	9613008402	9613008402	9613008402	9613008402
55		1	Upper plug	9613016202	9613008202	9613091402		9613017204
56	♦	1	Seal ring, EPDM	9613095106	9613095109	9613095119	9613095112	9613095112
	♦	1	Seal ring, NBR	9613095114	9613095115	9613095120	9613095116	9613095116
	♦	1	Seal ring, FPM	9613095105	9613095108	9613095118	9613095111	9613095111
	♦	1	Seal ring, HNBR	9613095104	9613095107	9613095117	9613095110	9613095110
		1	Seal ring set, (10 pcs.) EPDM	8010023165	8010023166	8010023167	8010023168	8010023168
57	♦	1	Lip seal, EPDM	9613008706	9613008711	9613008711	9613008711	9613008711
	♦	1	Lip seal, NBR	9613008707	9613008712	9613008712	9613008712	9613008712
	♦	1	Lip seal, FPM	9613008708	9613008713	9613008713	9613008713	9613008713
	♦	1	Lip seal, HNBR	9613008709	9613008714	9613008714	9613008714	9613008714
Lower plug								
38	♦	1	O-ring, EPDM	9611993555	9611993572	9611993572	9611993572	9611993572
		1	O-ring set, (10 pcs.) EPDM	8010023163	8010023164	8010023164	8010023164	8010023164
74	♦	1	Seal ring, EPDM	9613095206	9613095209	9613095219	9613095212	9613095212
	♦	1	Seal ring, NBR	9613095214	9613095215	9613095220	9613095216	9613095216
	♦	1	Seal ring, FPM Alfa Laval recommends EPDM	9613095205	9613095208	9613095218	9613095211	9613095211
	♦	1	Seal ring, HNBR	9613095204	9613095207	9613095217	9613095210	9613095210
		1	Seal ring set, (10 pcs.) EPDM	8010023169	8010023170	8010023171	8010023172	8010023172
75		1	Lower plug		9613008303	9613091003	9613017405	9613017407
Lower sealing element								
76	♦	1	O-ring, EPDM	9611993632	9611993636	9611993640	9611993640	9611993644
	♦	1	O-ring, NBR	9611993633	9611993637	9611993641	9611993641	9611993645
	♦	1	O-ring, FPM	9611993634	9611993638	9611993642	9611993642	9611993646
	♦	1	O-ring, HNBR	9611993635	9611993639	9611993643	9611993643	9611993647
77	♦	1	Lip seal, EPDM	9613008501	9613008511	9613008511	9613008511	9613008511
	♦	1	Lip seal, NBR	9613008502	9613008512	9613008512	9613008512	9613008512
	♦	1	Lip seal, FPM	9613008503	9613008513	9613008513	9613008513	9613008513
	♦	1	Lip seal, HNBR	9613008504	9613008514	9613008514	9613008514	9613008514
79		1	Lower sealing element	9613023901	9613024101	9613024301	9613024301	9613024501
80		1	Guide ring, PTFE	9613008416	9613008417	9613008417	9613008417	9613008417
81		1	Cover	9613049002	9613049003	9613049004	9613049004	9613049004
Extra parts if clamped valve body								
52		1	O-ring, EPDM	9611993632	9611993636	9611993640	9611993640	9611993644
		1	O-ring, NBR	9611993633	9611993637	9611993641	9611993641	9611993645
		1	O-ring, FPM	9611993634	9611993638	9611993642	9611993642	9611993646
		1	O-ring, HNBR	9611993635	9611993639	9611993643	9611993643	9611993647

Pos. 37, see section

See note below .

1.7

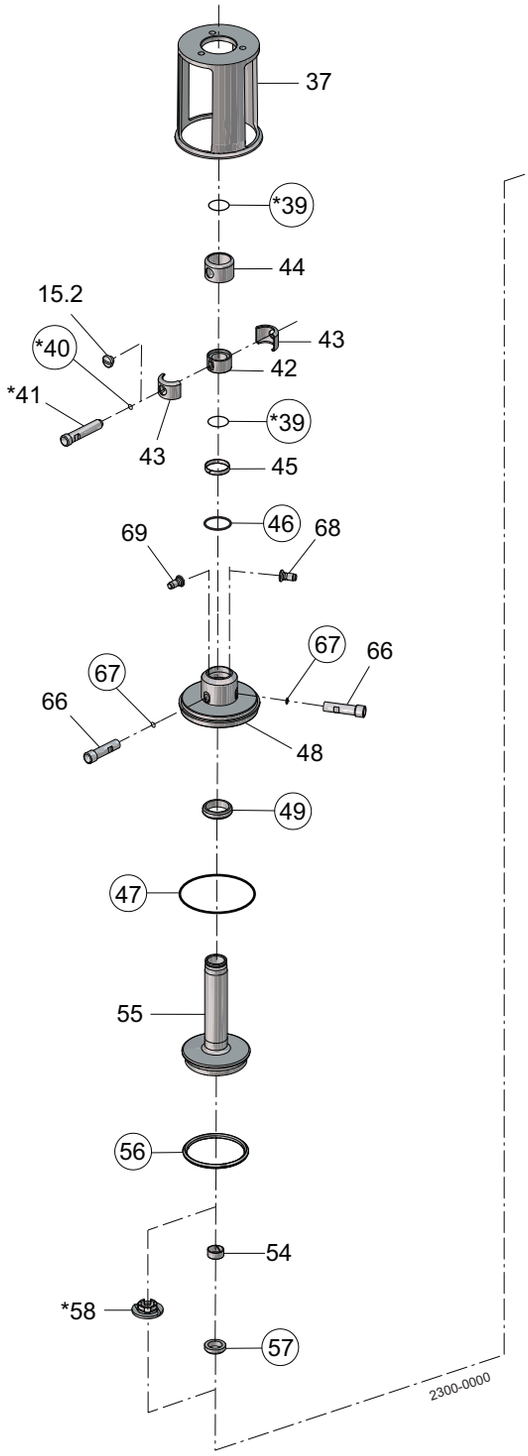

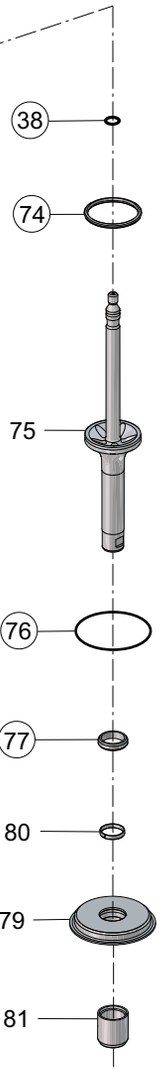

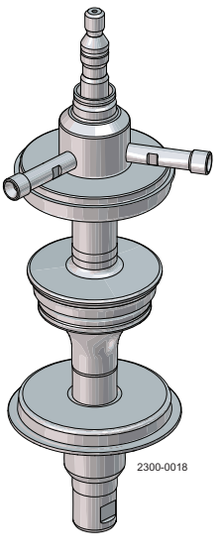

◯ = wear parts

✶ = with SpiralClean in leakage chamber

	DN/OD 51 DN 50 Seat ø53.3	DN/OD 63.5 DN/OD 76.1 DN 65/DN 80 Seat ø81.3	#2 DN/OD 101.6 DN 100 Seat ø100.3	#1 DN/OD 101.6 DN 100 Seat ø115.3	DN 125 DN 150 Seat ø115.3
♦ Service kit, EPDM	9611921550	9611921552	9611926334	9611921554	9611996025
♦ Service kit, NBR	9611921556	9611921558	9611926335	9611921560	8010000502
♦ Service kit, FPM	9611921562	9611921564	9611926336	9611921566	8010000503
♦ Service kit, HNBR	9611921568	9611921570	9611926337	9611921572	8010000504

For mixed size housings, the service kit is determined by the smallest size connection on the valve.
One exception is any housing with 6" connections will always refer to the 6" service kits listed below:

♦ Service kit, EPDM	9611926105	9611926169	9611926374	9611926233
♦ Service kit, NBR	9611926106	9611926170	9611926375	9611926234
♦ Service kit, FPM	9611926107	9611926171	9611926376	9611926235
♦ Service kit, HNBR	9611926108	9611926172	9611926236	9611923236

Parts marked with ♦ are included in the service kit.
#1 = Serial no. below 1030000 - manufactured before October 1st 2003
#2 = Serial no. above 1030000 - manufactured after October 1st 2003

NOTE!
If different connection size on upper and lower body, except for size 6", it is always the smallest body that determines the service kit.
If clamped valve body an extra O-ring (pos. 52) is required.
If SpiralClean in leakage chamber extra O-rings (2x pos. 39 and 1x pos. 40) is required.
Spare parts for mix size please refer to Configurator in AL Anytime

NOTE!
All FPM service kits are supplied with EPDM seal ring, pos. 74.

900691/1

1.7

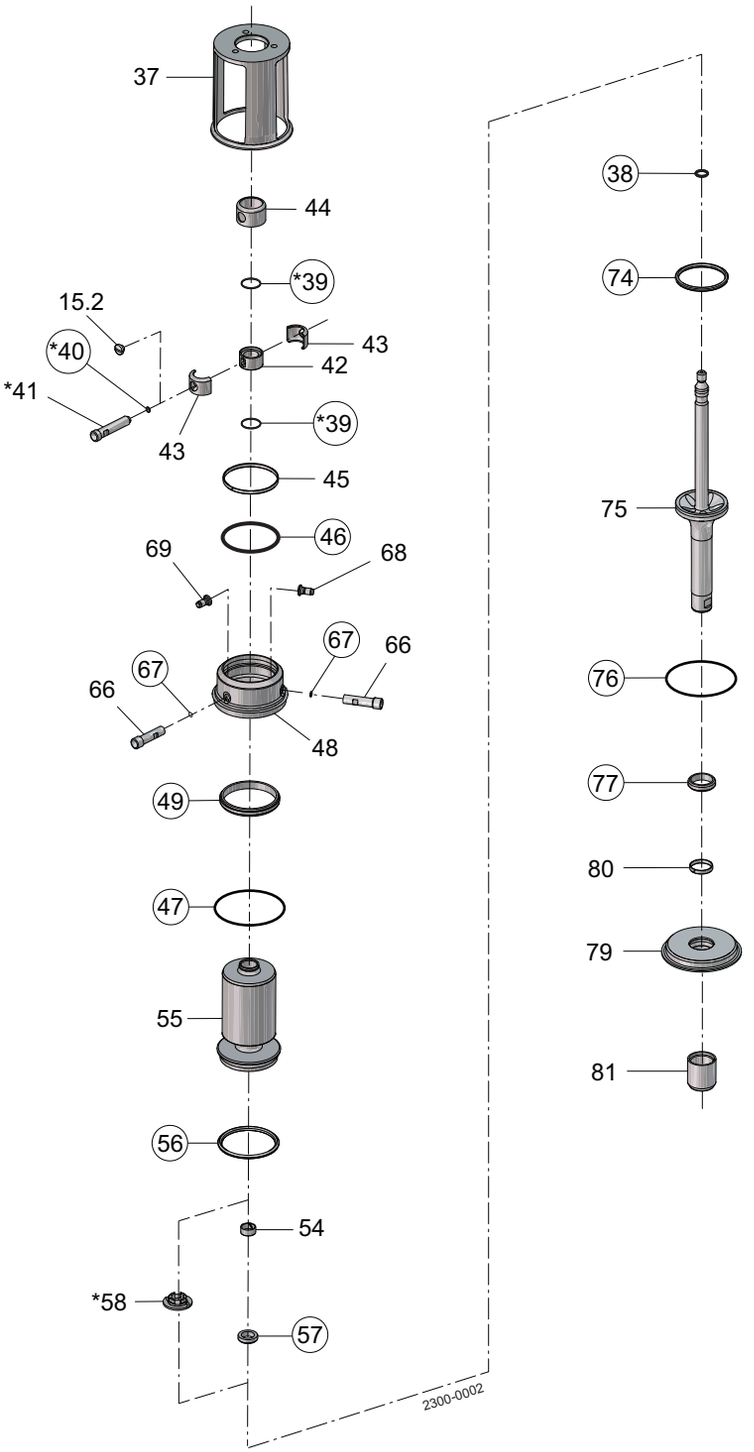

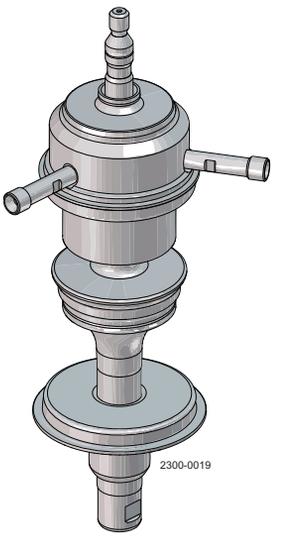

◯ = wear parts
✶ = with SpiralClean in leakage chamber

Pos. 37, see section
See note below service kits.

Pos		Qty	Denomination	DN/OD 51 DN 50 Seat ø53.3	DN/OD 63.5 DN/OD 76.1 DN 65/DN 80 Seat ø81.3	#2 DN/OD 101.6 DN 100 Seat ø100.3	#1 DN/OD 101.6 DN 100 Seat ø115.3	DN 125 DN 150 Seat ø115.3
Spindle liner								
15		1	Plug	9613414101	9613414101	9613414101	9613414101	9613414101
42		1	Spindle liner	9613011601	9613009001	9613009001	9613009001	9613009001
43		2	Clamp	9613011801	9613009201	9613009201	9613009201	9613009201
44		1	Lock	9613011701	9613009101	9613009101	9613009101	9613009101
Extra parts if SpiralClean in vent cavity								
39		2	O-ring, EPDM	9611993492	9611993493	9611993493	9611993493	9611993493
40		1	O-ring, EPDM	9611993119	9611993119	9611993119	9611993119	9611993119
41		1	Flushing tube	3135710172	3135710172	3135710172	3135710172	3135710172
58		1	Spray nozzle, PVDF	9613008801	9613014801	9613014801	9613014801	9613014801
Upper sealing element								
45		1	Guide ring, PTFE	9613008413	9613008414	9613008420	9613008415	9613008415
46	♦	1	O-ring, EPDM	9611993650	9611993651	9611994407	9611993652	9611993652
47	♦	1	O-ring, EPDM	9611993632	9611993636	9611993640	9611993640	9611993644
	♦	1	O-ring, NBR	9611993633	9611993637	9611993641	9611993641	9611993645
	♦	1	O-ring, FPM	9611993634	9611993638	9611993642	9611993642	9611993646
	♦	1	O-ring, HNBR	9611993635	9611993639	9611993643	9611993643	9611993647
48		1	Upper sealing element	9613049101	9613049201	9613065901	9613049301	9613049401
49	♦	1	Lip seal, EPDM	9613008521	9613008526	9613008548	9613008531	9613008531
	♦	1	Lip seal, NBR	9613008522	9613008527	9613008549	9613008532	9613008532
	♦	1	Lip seal, FPM	9613008523	9613008528	9613008550	9613008533	9613008533
	♦	1	Lip seal, HNBR	9613008524	9613008529	9613008551	9613008534	9613008534
66		2	Flushing tube	9613007902	9613007903	9613007904	9613007904	9613007905
67	♦	2	O-ring, EPDM	9611993119	9611993119	9611993119	9611993119	9611993119
68		1	Drain	9613008001	9613008001	9613008001	9613008001	9613008001
69		1	Nozzle	9613008002	9613008002	9613008002	9613008002	9613008002
Upper plug								
54		1	Guide ring, PTFE	9613008401	9613008402	9613008402	9613008402	9613008402
55		1	Upper plug	9613016302	9613009302	9613091502	9613017302	
56	♦	1	Seal ring, EPDM	9613095106	9613095109	9613095119	9613095112	9613095112
	♦	1	Seal ring, NBR	9613095114	9613095115	9613095120	9613095116	9613095116
	♦	1	Seal ring, FPM	9613095105	9613095108	9613095118	9613095111	9613095111
	♦	1	Seal ring, HNBR	9613095104	9613095107	9613095117	9613095110	9613095110
		1	Seal ring set, (10 pcs.) EPDM	8010023165	8010023166	8010023167	8010023168	8010023168
57	♦	1	Lip seal, EPDM	9613008706	9613008711	9613008711	9613008711	9613008711
	♦	1	Lip seal, NBR	9613008707	9613008712	9613008712	9613008712	9613008712
	♦	1	Lip seal, FPM	9613008708	9613008713	9613008713	9613008713	9613008713
	♦	1	Lip seal, HNBR	9613008709	9613008714	9613008714	9613008714	9613008714
Lower plug								
38	♦	1	O-ring, EPDM	9611993555	9611993572	9611993572	9611993572	9611993572
		1	O-ring set, (10 pcs.) EPDM	8010023163	8010023164	8010023164	8010023164	8010023164
74	♦	1	Seal ring, EPDM	9613095206	9613095209	9613095219	9613095212	9613095212
	♦	1	Seal ring, NBR	9613095214	9613095215	9613095220	9613095216	9613095216
	♦	1	Seal ring, FPM Alfa Laval recommends EPDM	9613095205	9613095208	9613095218	9613095211	9613095211
	♦	1	Seal ring, HNBR	9613095204	9613095207	9613095217	9613095210	9613095210
		1	Seal ring set, (10 pcs.) EPDM	8010023169	8010023170	8010023171	8010023172	8010023172
75		1	Lower plug		9613008303	9613091003	9613017405	9613017407
Lower sealing element								
76	♦	1	O-ring, EPDM	9611993632	9611993636	9611993640	9611993640	9611993644
	♦	1	O-ring, NBR	9611993633	9611993637	9611993641	9611993641	9611993645
	♦	1	O-ring, FPM	9611993634	9611993638	9611993642	9611993642	9611993646
	♦	1	O-ring, HNBR	9611993635	9611993639	9611993643	9611993643	9611993647
77	♦	1	Lip seal, EPDM	9613008501	9613008511	9613008511	9613008511	9613008511
	♦	1	Lip seal, NBR	9613008502	9613008512	9613008512	9613008512	9613008512
	♦	1	Lip seal, FPM	9613008503	9613008513	9613008513	9613008513	9613008513
	♦	1	Lip seal, HNBR	9613008504	9613008514	9613008514	9613008514	9613008514
79		1	Lower sealing element	9613023901	9613024101	9613024301	9613024301	9613024501
80		1	Guide ring, PTFE	9613008416	9613008417	9613008417	9613008417	9613008417
81		1	Cover	9613049002	9613049003	9613049004	9613049004	9613049004
Extra parts if clamped valve body								
52		1	O-ring, EPDM	9611993632	9611993636	9611993640	9611993640	9611993644
		1	O-ring, NBR	9611993633	9611993637	9611993641	9611993641	9611993645
		1	O-ring, FPM	9611993634	9611993638	9611993642	9611993642	9611993646
		1	O-ring, HNBR	9611993635	9611993639	9611993643	9611993643	9611993647

Pos. 37, see section

See note below service kits.

1.7

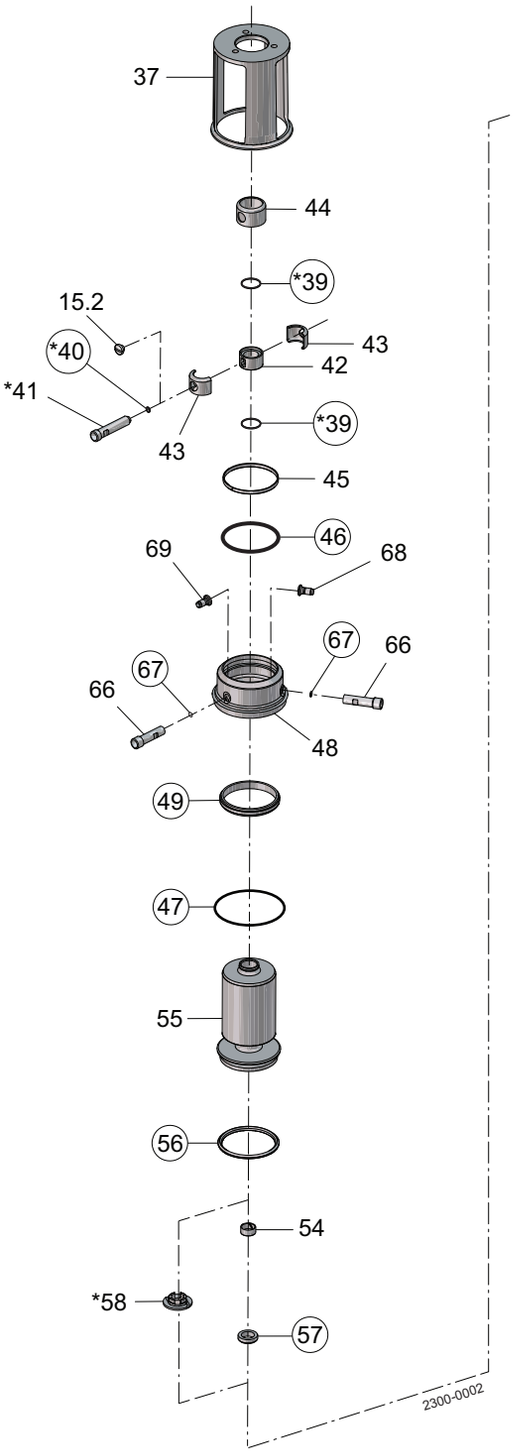

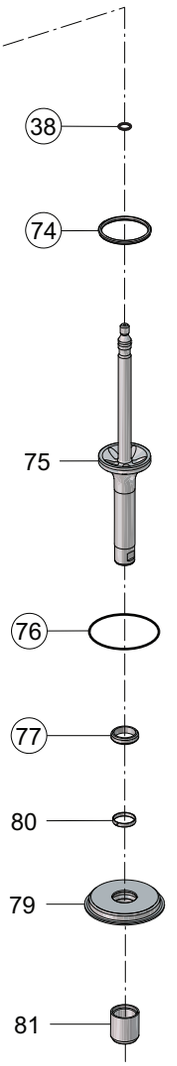

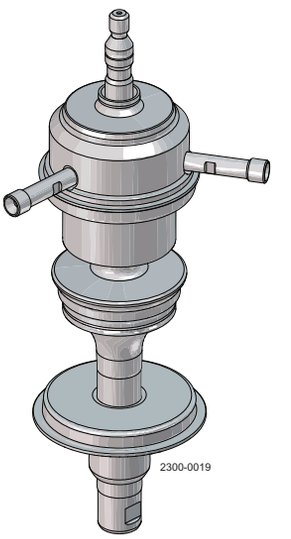

◯ = wear parts

✶ = with SpiralClean in leakage chamber

	DN/OD 51 DN 50 Seat ø53.3	DN/OD 63.5 DN/OD 76.1 DN 65/DN 80 Seat ø81.3	#2 DN/OD 101.6 DN 100 Seat ø100.3	#1 DN/OD 101.6 DN 100 Seat ø115.3	DN 125 DN 150 Seat ø115.3
♦ Service kit, EPDM	9611921574	9611921576	9611926338	9611921578	9611926029
♦ Service kit, NBR	9611921580	9611921582	9611926339	9611921584	9611926030
♦ Service kit, FPM	9611921586	9611921588	9611926340	9611921590	9611926031
♦ Service kit, HNBR	9611921592	9611921594	9611926341	9611921596	9611926032

For mixed size housings, the service kit is determined by the smallest size connection on the valve.
One exception is any housing with 6" connections will always refer to the 6" service kits listed below:

♦ Service kit, EPDM	9611926109	9611926173	9611926378	9611926237
♦ Service kit, NBR	9611926110	9611926174	9611926379	9611926238
♦ Service kit, FPM	9611926111	9611926175	9611926380	9611926239
♦ Service kit, HNBR	9611926112	9611926176	9611926381	9611926240

Parts marked with ♦ are included in the service kit.
#1 = Serial no. below 1030000 - manufactured before October 1st 2003
#2 = Serial no. above 1030000 - manufactured after October 1st 2003

NOTE!
If different connection size on upper and lower body, except for size 6", it is always the smallest body that determines the service kit.
If clamped valve body an extra O-ring (pos. 52) is required.
If SpiralClean in leakage chamber extra O-rings (2x pos. 39 and 1x pos. 40) is required.
Spare parts for mix size please refer to Configurator in AL Anytime

NOTE!
All FPM service kits are supplied with EPDM seal ring, pos. 74.

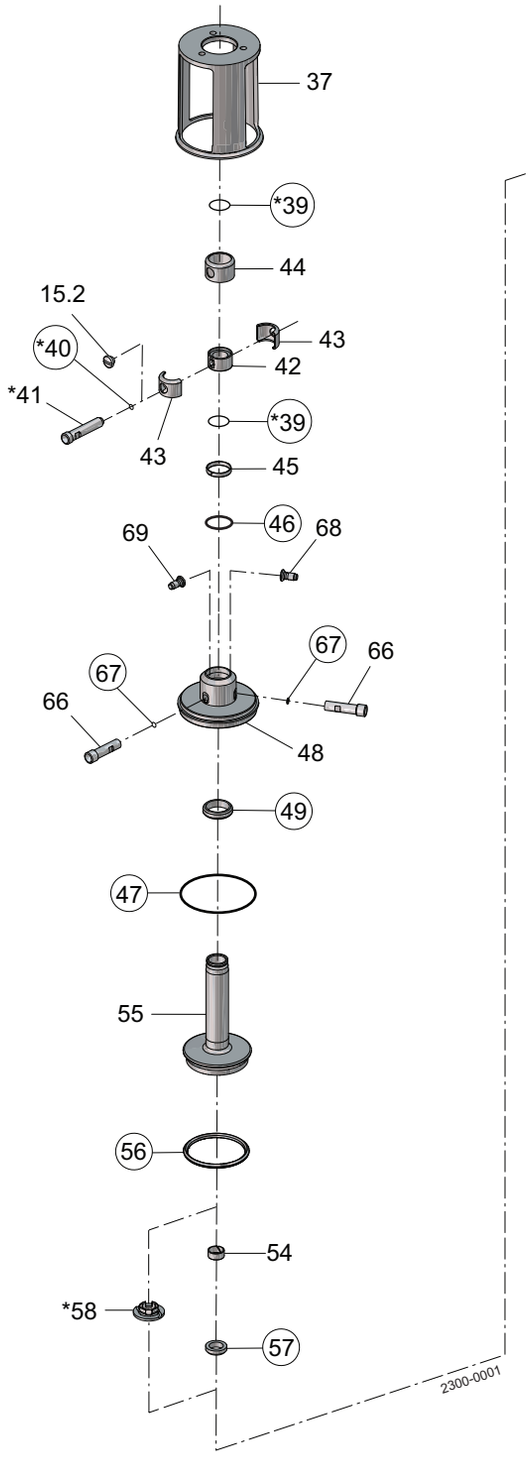

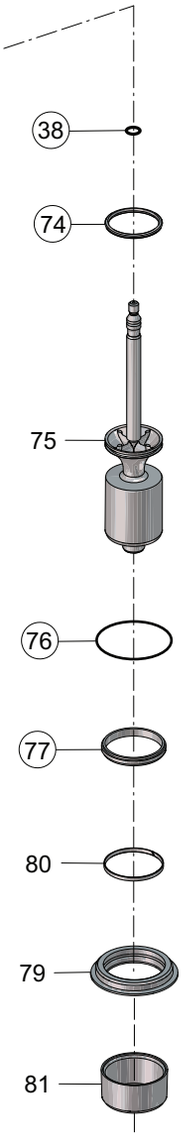

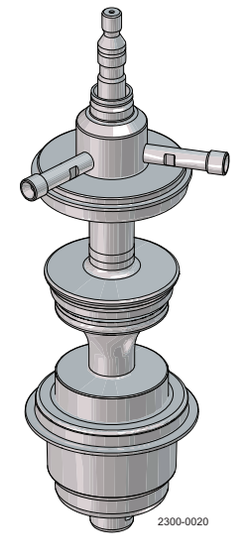

◯ = wear parts
★ = with SpiralClean in leakage chamber

Pos. 37, see section
See note below service kits.

Pos		Qty	Denomination	DN/OD 51 DN 50 Seat ø53.3	DN/OD 63.5 DN/OD 76.1 DN 65/DN 80 Seat ø81.3	#2 DN/OD 101.6 DN 100 Seat ø100.3	#1 DN/OD 101.6 DN 100 Seat ø115.3	DN 125 DN 150 Seat ø115.3
Spindle liner								
15		1	Plug	9613414101	9613414101	9613414101	9613414101	9613414101
42		1	Spindle liner	9613011601	9613009001	9613009001	9613009001	9613009001
43		2	Clamp	9613011801	9613009201	9613009201	9613009201	9613009201
44		1	Lock	9613011701	9613009101	9613009101	9613009101	9613009101
Extra parts if SpiralClean in vent cavity								
39		2	O-ring, EPDM	9611993492	9611993493	9611993493	9611993493	9611993493
40		1	O-ring, EPDM	9611993119	9611993119	9611993119	9611993119	9611993119
41		1	Flushing tube	3135710172	3135710172	3135710172	3135710172	3135710172
58		1	Spray nozzle, PVDF	9613008801	9613014801	9613014801	9613014801	9613014801
Upper sealing element								
45		1	Guide ring, PTFE	9613008416	9613008417	9613008417	9613008417	9613008417
46	♦	1	O-ring, EPDM	9611993653	9611993654	9611993654	9611993654	9611993654
47	♦	1	O-ring, EPDM	9611993632	9611993636	9611993640	9611993640	9611993644
	♦	1	O-ring, NBR	9611993633	9611993637	9611993641	9611993641	9611993645
	♦	1	O-ring, FPM	9611993634	9611993638	9611993642	9611993642	9611993646
	♦	1	O-ring, HNBR	9611993635	9611993639	9611993643	9611993643	9611993647
48		1	Upper sealing element	9613014301	9613006501	9613018901	9613018901	9613017101
49	♦	1	Lip seal, EPDM	9613008501	9613008511	9613008511	9613008511	9613008511
	♦	1	Lip seal, NBR	9613008502	9613008512	9613008512	9613008512	9613008512
	♦	1	Lip seal, FPM	9613008503	9613008513	9613008513	9613008513	9613008513
	♦	1	Lip seal, HNBR	9613008504	9613008514	9613008514	9613008514	9613008514
66		2	Flushing tube	9613007902	9613007903	9613007904	9613007904	9613007905
67	♦	2	O-ring, EPDM	9611993119	9611993119	9611993119	9611993119	9611993119
68		1	Drain	9613008001	9613008001	9613008001	9613008001	9613008001
69		1	Nozzle	9613008002	9613008002	9613008002	9613008002	9613008002
Upper plug								
54		1	Guide ring, PTFE	9613008401	9613008402	9613008402	9613008402	9613008402
55		1	Upper plug	9613016202	9613008202	9613091402		9613017204
56	♦	1	Seal ring, EPDM	9613095106	9613095109	9613095119	9613095112	9613095112
	♦	1	Seal ring, NBR	9613095114	9613095115	9613095120	9613095116	9613095116
	♦	1	Seal ring, FPM	9613095105	9613095108	9613095118	9613095111	9613095111
	♦	1	Seal ring, HNBR	9613095104	9613095107	9613095117	9613095110	9613095110
		1	Seal ring set, (10 pcs.) EPDM	8010023165	8010023166	8010023167	8010023168	8010023168
57	♦	1	Lip seal, EPDM	9613008706	9613008711	9613008711	9613008711	9613008711
	♦	1	Lip seal, NBR	9613008707	9613008712	9613008712	9613008712	9613008712
	♦	1	Lip seal, FPM	9613008708	9613008713	9613008713	9613008713	9613008713
	♦	1	Lip seal, HNBR	9613008709	9613008714	9613008714	9613008714	9613008714
Lower plug								
38	♦	1	O-ring, EPDM	9611993555	9611993572	9611993572	9611993572	9611993572
		1	O-ring set, (10 pcs.) EPDM	8010023163	8010023164	8010023164	8010023164	8010023164
74	♦	1	Seal ring, EPDM	9613095206	9613095209	9613095219	9613095212	9613095212
	♦	1	Seal ring, NBR	9613095214	9613095215	9613095220	9613095216	9613095216
	♦	1	Seal ring, FPM Alfa Laval recommends EPDM	9613095205	9613095208	9613095218	9613095211	9613095211
	♦	1	Seal ring, HNBR	9613095204	9613095207	9613095217	9613095210	9613095210
		1	Seal ring set, (10 pcs.) EPDM	8010023169	8010023170	8010023171	8010023172	8010023172
75		1	Lower plug	9613016503	9613009403		9613017505	9613017507
Lower sealing element								
76	♦	1	O-ring, EPDM	9611993632	9611993636	9611993640	9611993640	9611993644
	♦	1	O-ring, NBR	9611993633	9611993637	9611993641	9611993641	9611993645
	♦	1	O-ring, FPM	9611993634	9611993638	9611993642	9611993642	9611993646
	♦	1	O-ring, HNBR	9611993635	9611993639	9611993643	9611993643	9611993647
77	♦	1	Lip seal, EPDM	9613008521	9613008526	9613008548	9613008531	9613008531
	♦	1	Lip seal, NBR	9613008522	9613008527	9613008549	9613008532	9613008532
	♦	1	Lip seal, FPM	9613008523	9613008528	9613008550	9613008533	9613008533
	♦	1	Lip seal, HNBR	9613008524	9613008529	9613008551	9613008534	9613008534
79		1	Lower sealing element	9613023902	9613024102	9613066201	9613024302	9613024502
80		1	Guide ring, PTFE	9613008413	9613008414	9613008420	9613008415	9613008415
81		1	Cover	9613049005	9613049006	9613049015	9613049007	9613049007
Extra parts if clamped valve body								
52		1	O-ring, EPDM	9611993632	9611993636	9611993640	9611993640	9611993644
		1	O-ring, NBR	9611993633	9611993637	9611993641	9611993641	9611993645
		1	O-ring, FPM	9611993634	9611993638	9611993642	9611993642	9611993646
		1	O-ring, HNBR	9611993635	9611993639	9611993643	9611993643	9611993647

Pos. 37, see section

See note below service kits.

1.7

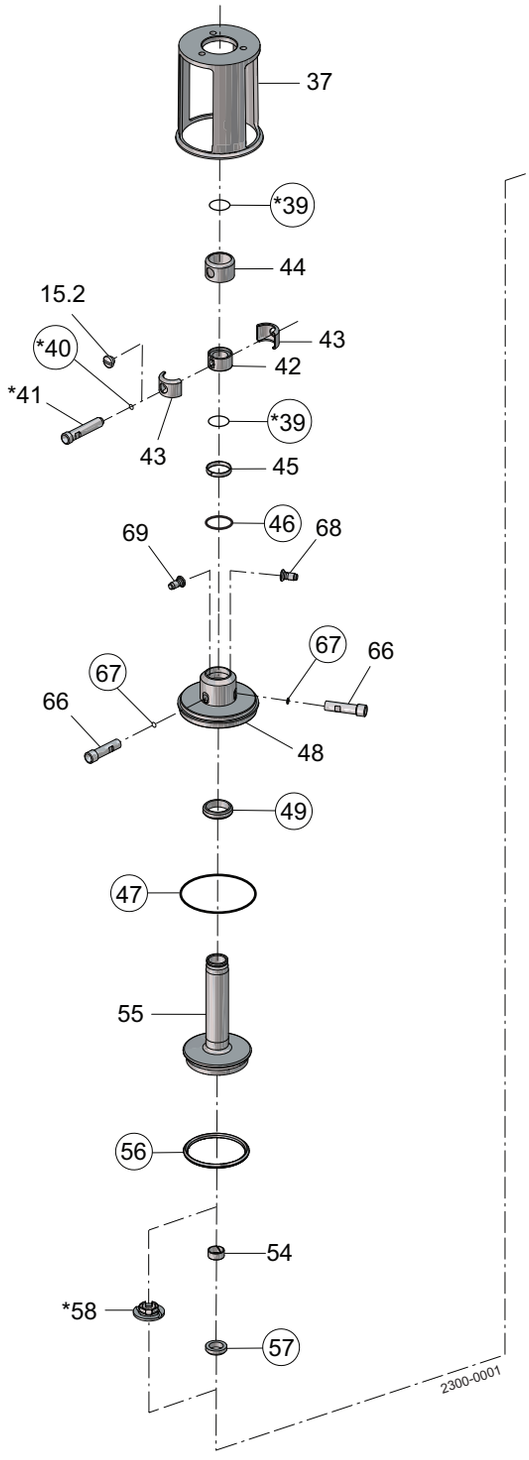

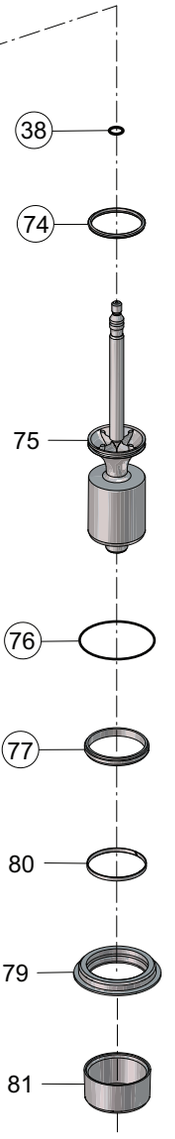

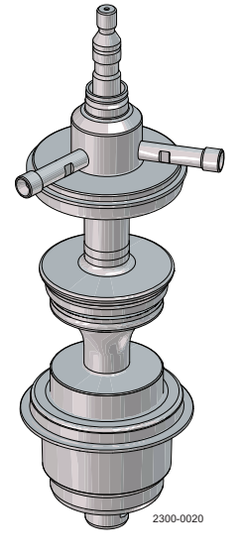

◯ = wear parts

✶ = with SpiralClean in leakage chamber

	DN/OD 51 DN 50 Seat ø53.3	DN/OD 63.5 DN/OD 76.1 DN 65/DN 80 Seat ø81.3	#2 DN/OD 101.6 DN 100 Seat ø100.3	#1 DN/OD 101.6 DN 100 Seat ø115.3	DN 125 DN 150 Seat ø115.3
♦ Service kit, EPDM	9611921598	9611921599	9611926342	9611921602	9611926033
♦ Service kit, NBR	9611921605	9611921606	9611926343	9611921608	9611926034
♦ Service kit, FPM	9611921611	9611921612	9611926344	9611921614	9611926035
♦ Service kit, HNBR	9611921617	9611921618	9611926345	9611921620	9611926036

For mixed size housings, the service kit is determined by the smallest size connection on the valve.
One exception is any housing with 6" connections will always refer to the 6" service kits listed below:

♦ Service kit, EPDM	9611926113	9611926177	9611926382	9611926241
♦ Service kit, EPDM	9611926114	9611926178	9611926383	9611926242
♦ Service kit, EPDM	9611926115	9611926179	9611926384	9611926243
♦ Service kit, EPDM	9611926116	9611926180	9611926385	9611926244

Parts marked with ♦ are included in the service kit.
#1 = Serial no. below 1030000 - manufactured before October 1st 2003
#2 = Serial no. above 1030000 - manufactured after October 1st 2003

NOTE!
If different connection size on upper and lower body, except for size 6", it is always the smallest body that determines the service kit.
If clamped valve body an extra O-ring (pos. 52) is required.
If SpiralClean in leakage chamber extra O-rings (2x pos. 39 and 1x pos. 40) is required.
Spare parts for mix size please refer to Configurator in AL Anytime

NOTE!
All FPM service kits are supplied with EPDM seal ring, pos. 74.

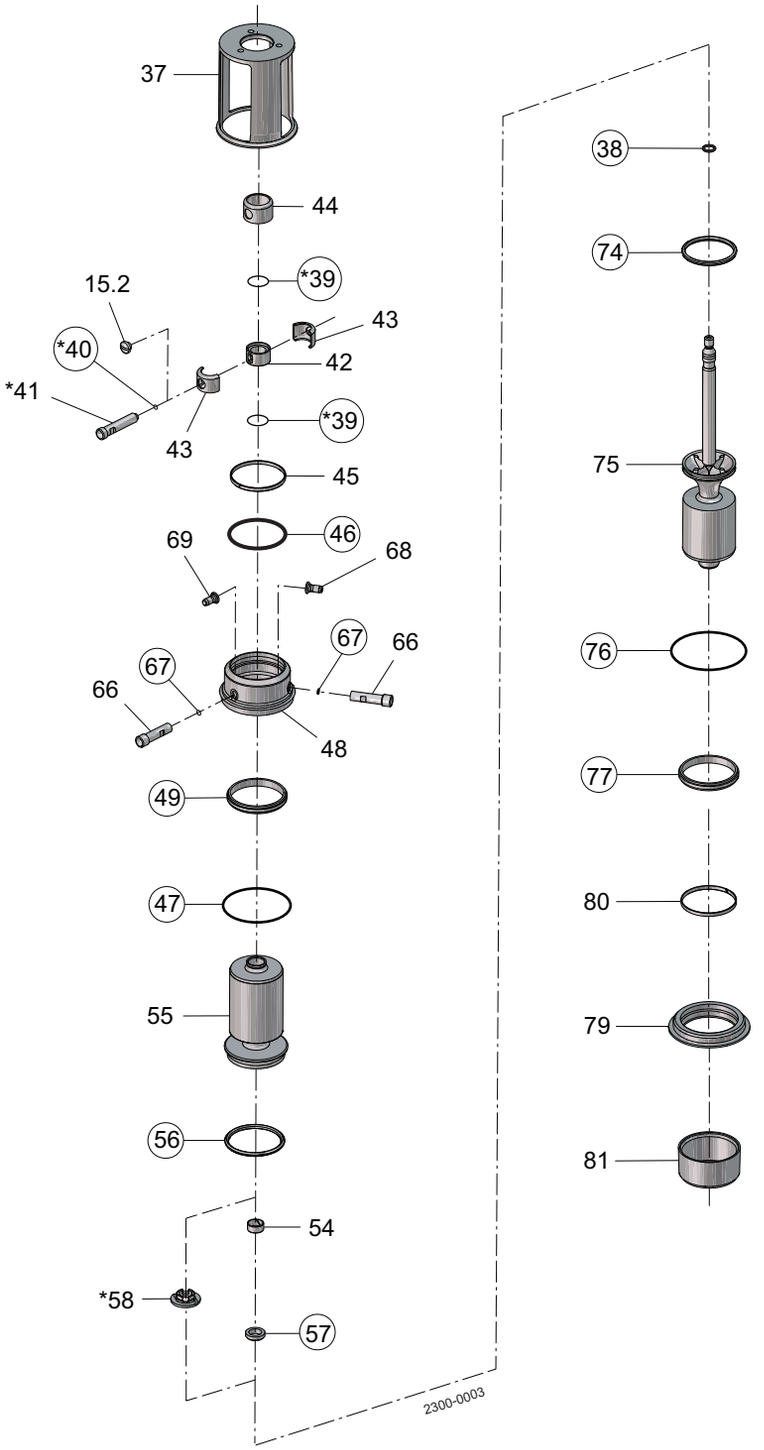

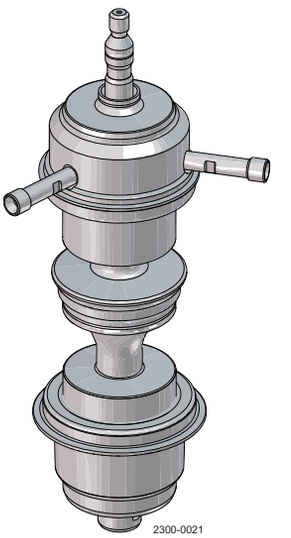

◯ = wear parts
✶ = with SpiralClean in leakage chamber

Pos. 37, see section
See note below service kits.

Pos		Qty	Denomination	DN/OD 38 DN 40 Seat ø53.3	DN/OD 51 DN 50 Seat ø53.3	DN/OD 63.5 DN/OD 76.1 DN 65/DN 80 Seat ø81.3	#2 DN/OD 101.6 DN 100 Seat ø100.3	#1 DN/OD 101.6 DN 100 Seat ø115.3	DN 125 DN 150 Seat ø115.3
Spindle liner									
15		1	Plug	9613414101	9613414101	9613414101	9613414101	9613414101	9613414101
42		1	Spindle liner	9613011601	9613011601	9613009001	9613009001	9613009001	9613009001
43		2	Clamp	9613011801	9613011801	9613009201	9613009201	9613009201	9613009201
44		1	Lock	9613011701	9613011701	9613009101	9613009101	9613009101	9613009101
Extra parts if SpiralClean in vent cavity									
39		2	O-ring, EPDM	9611993492	9611993492	9611993493	9611993493	9611993493	9611993493
40		1	O-ring, EPDM	9611993119	9611993119	9611993119	9611993119	9611993119	9611993119
41		1	Flushing tube	3135710172	3135710172	3135710172	3135710172	3135710172	3135710172
58		1	Spray nozzle, PVDF	9613008801	9613008801	9613014801	9613014801	9613014801	9613014801
Upper sealing element									
45		1	Guide ring	9613008412	9613008413	9613008414	9613008420	9613008415	9613008415
46	♦	1	O-ring, EPDM	9611993655	9611993650	9611993651	9611994407	9611993652	9611993652
47	♦	1	O-ring, EPDM	9611993628	9611993632	9611993636	9611993640	9611993640	9611993644
	♦	1	O-ring, NBR	9611993629	9611993633	9611993637	9611993641	9611993641	9611993645
	♦	1	O-ring, FPM	9611993630	9611993634	9611993638	9611993642	9611993642	9611993646
	♦	1	O-ring, HNBR	9611993631	9611993635	9611993639	9611993643	9611993643	9611993647
48		1	Upper sealing element	9613016101	9613049101	9613049201	9613065901	9613049301	9613049401
49	♦	1	Lip seal, EPDM	9613008516	9613008521	9613008526	9613008548	9613008531	9613008531
	♦	1	Lip seal, NBR	9613008517	9613008522	9613008527	9613008549	9613008532	9613008532
	♦	1	Lip seal, FPM	9613008518	9613008523	9613008528	9613008550	9613008533	9613008533
	♦	1	Lip seal, HNBR	9613008519	9613008524	9613008529	9613008551	9613008534	9613008534
66		2	Flushing tube	9613007901	9613007902	9613007903	9613007904	9613007904	9613007905
67	♦	2	O-ring, EPDM	9611993119	9611993119	9611993119	9611993119	9611993119	9611993119
68		1	Drain	9613008001	9613008001	9613008001	9613008001	9613008001	9613008001
69		1	Nozzle	9613008002	9613008002	9613008002	9613008002	9613008002	9613008002
Upper plug									
54		1	Guide ring, PTFE	9613008401	9613008401	9613008402	9613008402	9613008402	9613008402
55		1	Upper plug	9613014402	9613016302	9613009302	9613091502	9613017302	
56	♦	1	Seal ring, EPDM	9613095106	9613095106	9613095109	9613095119	9613095112	9613095112
	♦	1	Seal ring, NBR	9613095114	9613095114	9613095115	9613095120	9613095116	9613095116
	♦	1	Seal ring, FPM	9613095105	9613095105	9613095108	9613095118	9613095111	9613095111
	♦	1	Seal ring, HNBR	9613095104	9613095104	9613095107	9613095117	9613095110	9613095110
		1	Seal ring set, (10 pcs.) EPDM	8010023165	8010023165	8010023166	8010023167	8010023168	8010023168
57	♦	1	Lip seal, EPDM	9613008706	9613008706	9613008711	9613008711	9613008711	9613008711
	♦	1	Lip seal, NBR	9613008707	9613008707	9613008712	9613008712	9613008712	9613008712
	♦	1	Lip seal, FPM	9613008708	9613008708	9613008713	9613008713	9613008713	9613008713
	♦	1	Lip seal, HNBR	9613008709	9613008709	9613008714	9613008714	9613008714	9613008714
Lower plug									
38	♦	1	O-ring, EPDM	9611993555	9611993555	9611993572	9611993572	9611993572	9611993572
		1	O-ring set, (10 pcs.) EPDM	8010023163	8010023163	8010023164	8010023164	8010023164	8010023164
74	♦	1	Seal ring, EPDM	9613095206	9613095206	9613095209	9613095219	9613095212	9613095212
	♦	1	Seal ring, NBR	9613095214	9613095214	9613095215	9613095220	9613095216	9613095216
	♦	1	Seal ring, FPM Alfa Laval recommends EPDM	9613095205	9613095205	9613095208	9613095218	9613095211	9613095211
	♦	1	Seal ring, HNBR	9613095204	9613095204	9613095207	9613095217	9613095210	9613095210
		1	Seal ring set, (10 pcs.) EPDM	8010023169	8010023169	8010023170	8010023171	8010023172	8010023172
75		1	Lower plug		9613016503	9613009403		9613017505	9613017507
Lower sealing element									
76	♦	1	O-ring, EPDM	9611993628	9611993632	9611993636	9611993640	9611993640	9611993644
	♦	1	O-ring, NBR	9611993629	9611993633	9611993637	9611993641	9611993641	9611993645
	♦	1	O-ring, FPM	9611993630	9611993634	9611993638	9611993642	9611993642	9611993646
	♦	1	O-ring, HNBR	9611993631	9611993635	9611993639	9611993643	9611993643	9611993647
77	♦	1	Lip seal, EPDM	9613008516	9613008521	9613008526	9613008548	9613008531	9613008531
	♦	1	Lip seal, NBR	9613008517	9613008522	9613008527	9613008549	9613008532	9613008532
	♦	1	Lip seal, FPM	9613008518	9613008523	9613008528	9613008550	9613008533	9613008533
	♦	1	Lip seal, HNBR	9613008519	9613008524	9613008529	9613008551	9613008534	9613008534
79		1	Lower sealing element	9613023701	9613023902	9613024102	9613066201	9613024302	9613024502
80		1	Guide ring	9613008412	9613008413	9613008414	9613008420	9613008415	9613008415
81		1	Cover	9613049001	9613049005	9613049006	9613049015	9613049007	9613049007
Extra parts if clamped valve body									
52		1	O-ring, EPDM	9611993628	9611993632	9611993636	9611993640	9611993640	9611993644
		1	O-ring, NBR	9611993629	9611993633	9611993637	9611993641	9611993641	9611993645
		1	O-ring, FPM	9611993630	9611993634	9611993638	9611993642	9611993642	9611993646
		1	O-ring, HNBR	9611993631	9611993635	9611993639	9611993643	9611993643	9611993647

Pos. 37, see section

See note below service kits.

1.7

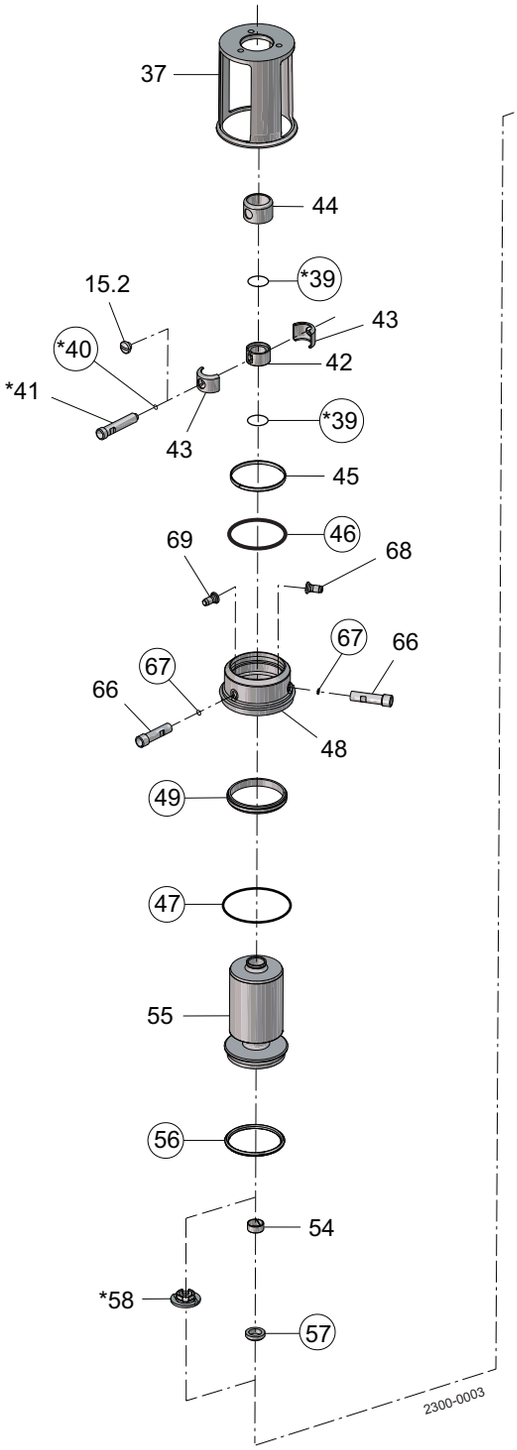

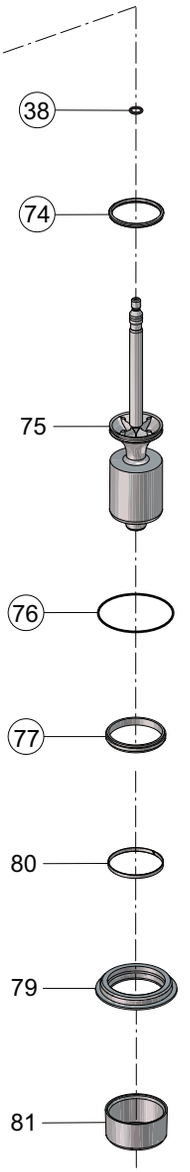

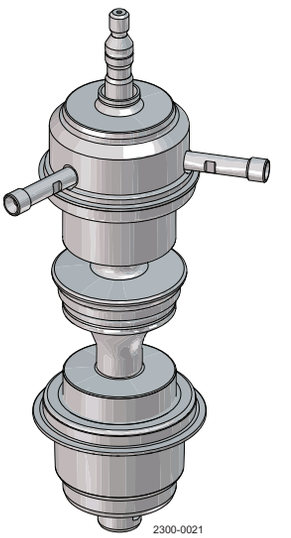

◯ = wear parts

★ = with SpiralClean in leakage chamber

	DN/OD 38 DN 40 Seat ø53.3	DN/OD 51 DN 50 Seat ø53.3	DN/OD 63.5 DN/OD 76.1 DN 65/DN 80 Seat ø81.3	#2 DN/OD 101.6 DN 100 Seat ø100.3	#1 DN/OD 101.6 DN 100 Seat ø115.3	DN 125 DN 150 Seat ø115.3
♦ Service kit, EPDM	9611921622	9611921623	9611921624	9611926346	9611921626	9611926037
♦ Service kit, NBR	9611921628	9611921629	9611921630	9611926347	9611921632	9611926038
♦ Service kit, FPM	9611921634	9611921635	9611921636	9611926348	9611921638	9611926039
♦ Service kit, HNBR	9611921640	9611921641	9611921642	9611926349	9611921644	9611926040

For mixed size housings, the service kit is determined by the smallest size connection on the valve.
One exception is any housing with 6" connections will always refer to the 6" service kits listed below:

♦ Service kit, EPDM	9611926089	9611926117	9611926181	9611926386	9611926245
♦ Service kit, NBR	9611926090	9611926118	9611926182	9611926387	9611926246
♦ Service kit, FPM	9611926091	9611926119	9611926183	9611926388	9611926247
♦ Service kit, HNBR	9611926092	9611926120	9611926184	9611926389	9611926248

Parts marked with ♦ are included in the service kit.
#1 = Serial no. below 1030000 - manufactured before October 1st 2003
#2 = Serial no. above 1030000 - manufactured after October 1st 2003

NOTE!
If different connection size on upper and lower body, except for size 6", it is always the smallest body that determines the service kit.
If clamped valve body an extra O-ring (pos. 52) is required.
If SpiralClean in leakage chamber extra O-rings (2x pos. 39 and 1x pos. 40) is required.
Spare parts for mix size please refer to Configurator in AL Anytime

NOTE!
All FPM service kits are supplied with EPDM seal ring, pos. 74.

1.7

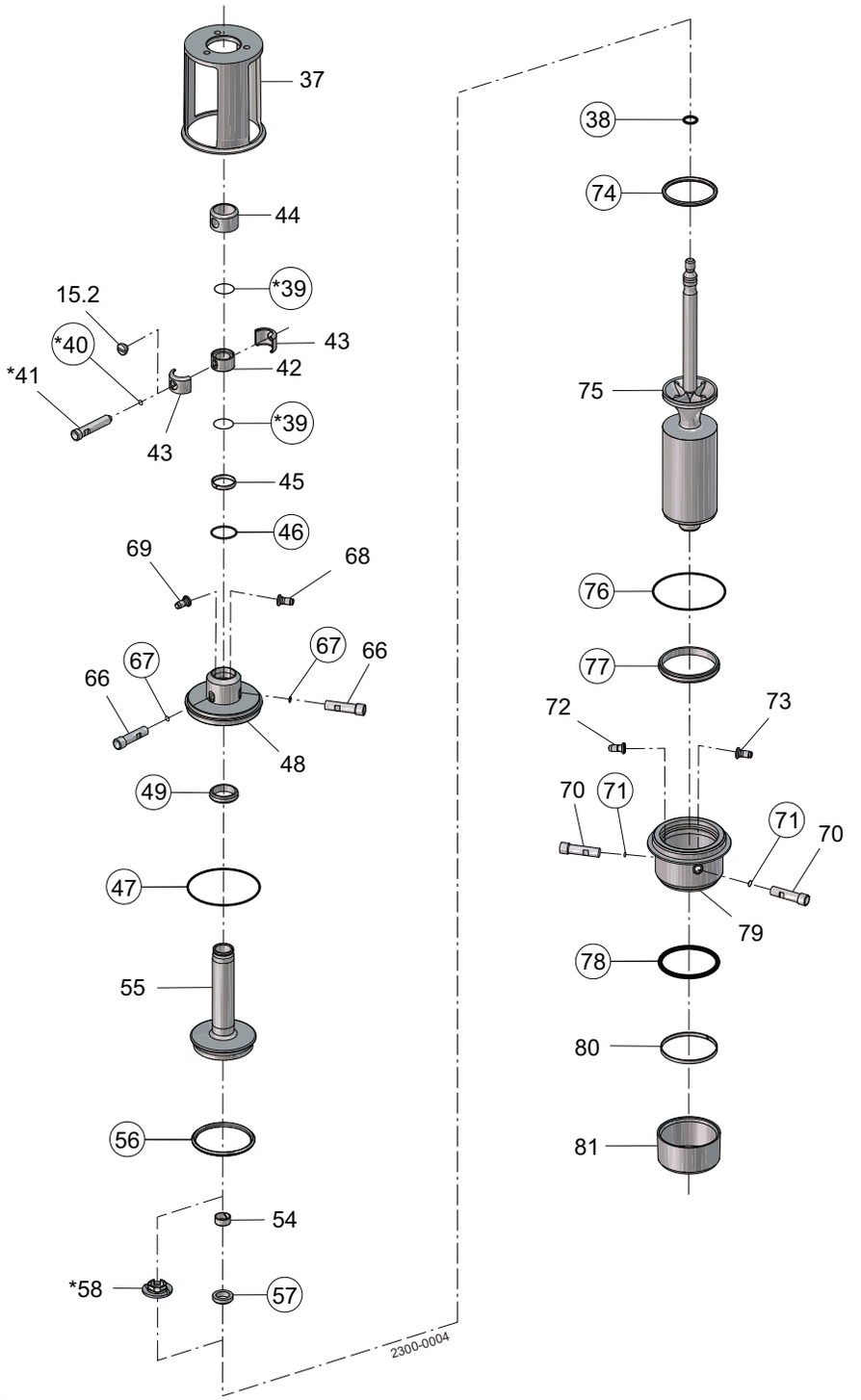

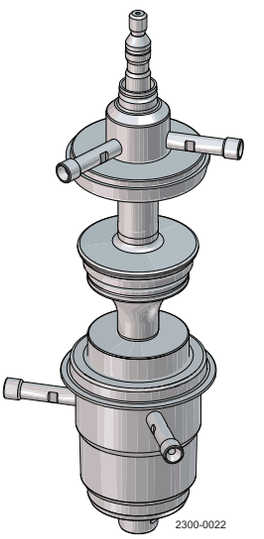

◯ = wear parts
✶ = with SpiralClean in leakage chamber

Pos. 37, see section
See note below service kits.

Pos		Qty	Denomination	DN/OD 51 DN 50 Seat ø53.3	DN/OD 63.5 DN/OD 76.1 DN 65/DN 80 Seat ø81.3	#2 DN/OD 101.6 DN 100 Seat ø100.3	#1 DN/OD 101.6 DN 100 Seat ø115.3	DN 125 DN 150 Seat ø115.3
Spindle liner								
15		1	Plug	9613414101	9613414101	9613414101	9613414101	9613414101
42		1	Spindle liner	9613011601	9613009001	9613009001	9613009001	9613009001
43		2	Clamp	9613011801	9613009201	9613009201	9613009201	9613009201
44		1	Lock	9613011701	9613009101	9613009101	9613009101	9613009101
Extra parts if SpiralClean in vent cavity								
39		2	O-ring, EPDM	9611993492	9611993493	9611993493	9611993493	9611993493
40		1	O-ring, EPDM	9611993119	9611993119	9611993119	9611993119	9611993119
41		1	Flushing tube	3135710172	3135710172	3135710172	3135710172	3135710172
58		1	Spray nozzle, PVDF	9613008801	9613014801	9613014801	9613014801	9613014801
Upper sealing element								
45		1	Guide ring	9613008416	9613008417	9613008417	9613008417	9613008417
46	♦	1	O-ring, EPDM	9611993653	9611993654	9611993654	9611993654	9611993654
47	♦	1	O-ring, EPDM	9611993632	9611993636	9611993640	9611993640	9611993644
	♦	1	O-ring, NBR	9611993633	9611993637	9611993641	9611993641	9611993645
	♦	1	O-ring, FPM	9611993634	9611993638	9611993642	9611993642	9611993646
	♦	1	O-ring, HNBR	9611993635	9611993639	9611993643	9611993643	9611993647
48		1	Upper sealing element	9613014301	9613006501	9613018901	9613018901	9613017101
49	♦	1	Lip seal, EPDM	9613008501	9613008511	9613008511	9613008511	9613008511
	♦	1	Lip seal, NBR	9613008502	9613008512	9613008512	9613008512	9613008512
	♦	1	Lip seal, FPM	9613008503	9613008513	9613008513	9613008513	9613008513
	♦	1	Lip seal, HNBR	9613008504	9613008514	9613008514	9613008514	9613008514
66		2	Flushing tube	9613007902	9613007903	9613007904	9613007904	9613007905
67	♦	2	O-ring, EPDM	9611993119	9611993119	9611993119	9611993119	9611993119
68		1	Drain	9613008001	9613008001	9613008001	9613008001	9613008001
69		1	Nozzle	9613008002	9613008002	9613008002	9613008002	9613008002
Upper plug								
54		1	Guide ring, PTFE	9613008401	9613008402	9613008402	9613008402	9613008402
55		1	Upper plug	9613016202	9613008202	9613091402		9613017204
56	♦	1	Seal ring, EPDM	9613095106	9613095109	9613095119	9613095112	9613095112
	♦	1	Seal ring, NBR	9613095114	9613095115	9613095120	9613095116	9613095116
	♦	1	Seal ring, FPM	9613095105	9613095108	9613095118	9613095111	9613095111
	♦	1	Seal ring, HNBR	9613095104	9613095107	9613095117	9613095110	9613095110
		1	Seal ring set, (10 pcs.) EPDM	8010023165	8010023166	8010023167	8010023168	8010023168
57	♦	1	Lip seal, EPDM	9613008706	9613008711	9613008711	9613008711	9613008711
	♦	1	Lip seal, NBR	9613008707	9613008712	9613008712	9613008712	9613008712
	♦	1	Lip seal, FPM	9613008708	9613008713	9613008713	9613008713	9613008713
	♦	1	Lip seal, HNBR	9613008709	9613008714	9613008714	9613008714	9613008714
Lower plug								
38	♦	1	O-ring, EPDM	9611993555	9611993572	9611993572	9611993572	9611993572
		1	O-ring set, (10 pcs.) EPDM	8010023163	8010023164	8010023164	8010023164	8010023164
74	♦	1	Seal ring, EPDM	9613095206	9613095209	9613095219	9613095212	9613095212
	♦	1	Seal ring, NBR	9613095214	9613095215	9613095220	9613095216	9613095216
	♦	1	Seal ring, FPM Alfa Laval recommends EPDM	9613095205	9613095208	9613095218	9613095211	9613095211
	♦	1	Seal ring, HNBR	9613095204	9613095207	9613095217	9613095210	9613095210
		1	Seal ring set, (10 pcs.) EPDM	8010023169	8010023170	8010023171	8010023172	8010023172
75		1	Lower plug	9613016504	9613009404	9613091104	9613017506	9613017508
Lower sealing element								
70		2	Flushing tube	9613007902	9613007903	9613007904	9613007904	9613007905
71	♦	2	O-ring, EPDM	9611993119	9611993119	9611993119	9611993119	9611993119
72		1	Drain	9613008001	9613008001	9613008001	9613008001	9613008001
73		1	Nozzle	9613008002	9613008002	9613008002	9613008002	9613008002
76	♦	1	O-ring, EPDM	9611993632	9611993636	9611993640	9611993640	9611993644
	♦	1	O-ring, NBR	9611993633	9611993637	9611993641	9611993641	9611993645
	♦	1	O-ring, FPM	9611993634	9611993638	9611993642	9611993642	9611993646
	♦	1	O-ring, HNBR	9611993635	9611993639	9611993643	9611993643	9611993647
77	♦	1	Lip seal, EPDM	9613008521	9613008526	9613008548	9613008531	9613008531
	♦	1	Lip seal, NBR	9613008522	9613008527	9613008549	9613008532	9613008532
	♦	1	Lip seal, FPM	9613008523	9613008528	9613008550	9613008533	9613008533
	♦	1	Lip seal, HNBR	9613008524	9613008529	9613008551	9613008534	9613008534
78	♦	1	O-ring, EPDM	9611993650	9611993651	9611994407	9611993652	9611993652
79		1	Lower sealing element	9613049501	9613049601	9613066101	9613049701	9613049801
80		1	Guide ring, PTFE	9613008413	9613008414	9613008420	9613008415	9613008415
81		1	Cover	9613049005	9613049006	9613049015	9613049007	9613049007
Extra parts if clamped valve body								
52		1	O-ring, EPDM	9611993632	9611993636	9611993640	9611993640	9611993644
		1	O-ring, NBR	9611993633	9611993637	9611993641	9611993641	9611993645
		1	O-ring, FPM	9611993634	9611993638	9611993642	9611993642	9611993646
		1	O-ring, HNBR	9611993635	9611993639	9611993643	9611993643	9611993647

Pos. 37, see section

See note below service kits.

1.7

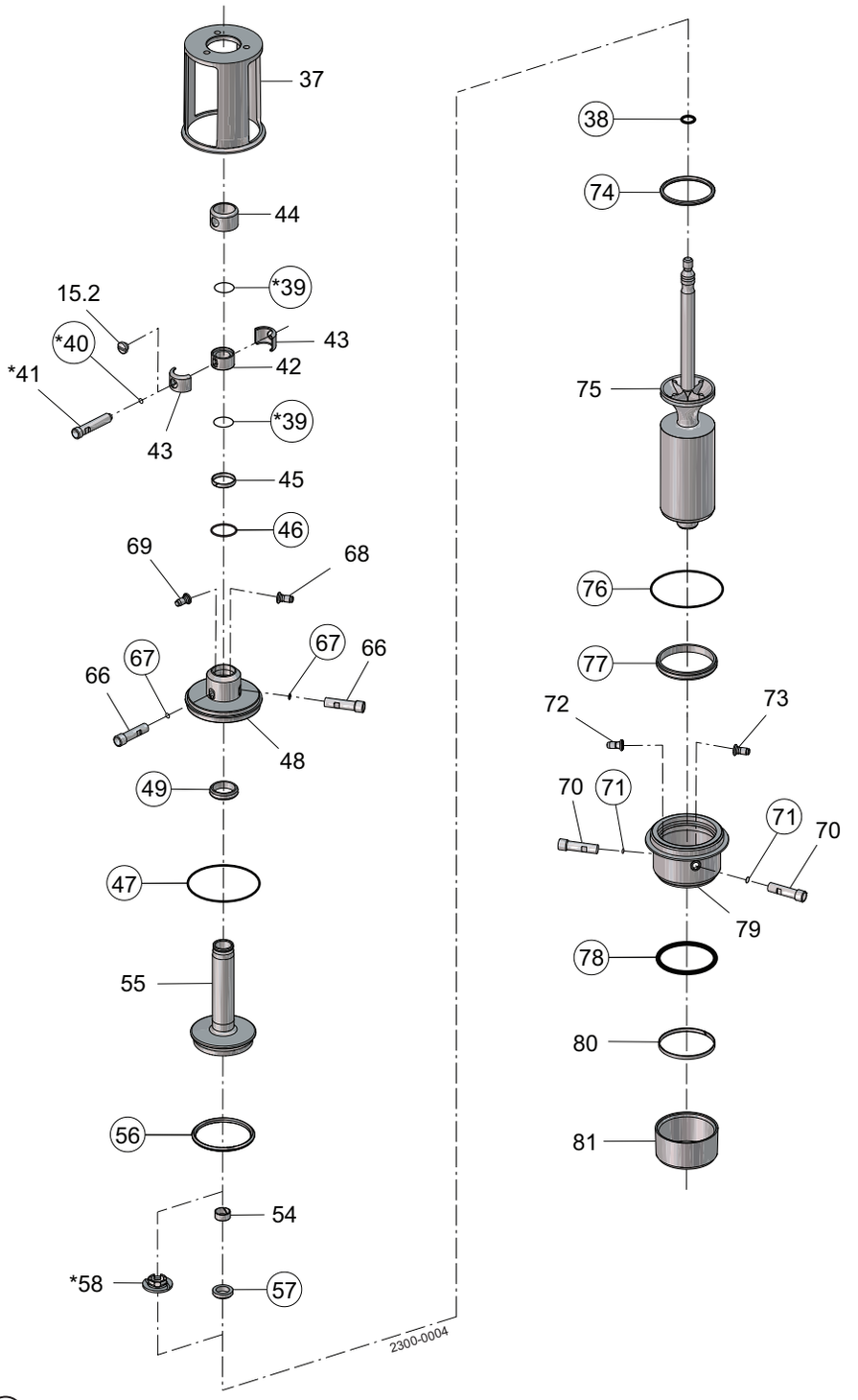

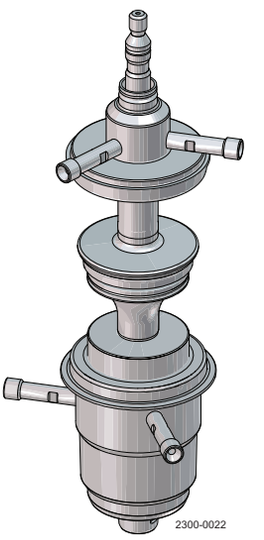

◯ = wear parts

✶ = with SpiralClean in leakage chamber

	DN/OD 51 DN 50 Seat ø53.3	DN/OD 63.5 DN/OD 76.1 DN 65/DN 80 Seat ø81.3	#2 DN/OD 101.6 DN 100 Seat ø100.3	#1 DN/OD 101.6 DN 100 Seat ø115.3	DN 125 DN 150 Seat ø115.3
♦ Service kit, EPDM	9611921647	9611921648	9611926350	9611921650	9611926041
♦ Service kit, NBR	9611921653	9611921654	9611926351	9611921656	9611926042
♦ Service kit, FPM	9611921659	9611921660	9611926352	9611921662	9611926043
♦ Service kit, HNBR	9611921665	9611921666	9611926353	9611921668	9611926044

For mixed size housings, the service kit is determined by the smallest size connection on the valve.
One exception is any housing with 6” connections will always refer to the 6” service kits listed below:

♦ Service kit, EPDM	9611926121	9611926185	9611926390	9611926249
♦ Service kit, NBR	9611926122	9611926186	9611926391	9611926250
♦ Service kit, FPM	9611926123	9611926187	9611926392	9611926251
♦ Service kit, HNBR	9611926124	9611926188	9611926393	9611926252

Parts marked with ♦ are included in the service kit.
#1 = Serial no. below 1030000 - manufactured before October 1st 2003
#2 = Serial no. above 1030000 - manufactured after October 1st 2003

NOTE!
If different connection size on upper and lower body, except for size 6", it is always the smallest body that determines the service kit.
If clamped valve body an extra O-ring (pos. 52) is required.
If SpiralClean in leakage chamber extra O-rings (2x pos. 39 and 1x pos. 40) is required.
Spare parts for mix size please refer to Configurator in AL Anytime

NOTE!
All FPM service kits are supplied with EPDM seal ring, pos. 74.

1.7

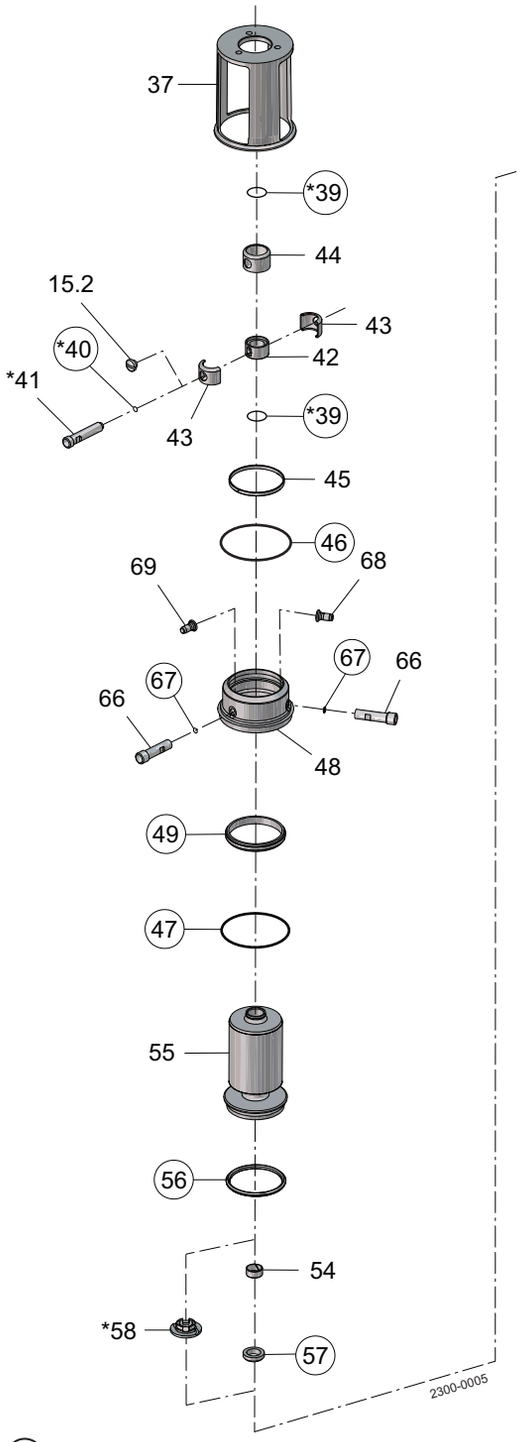

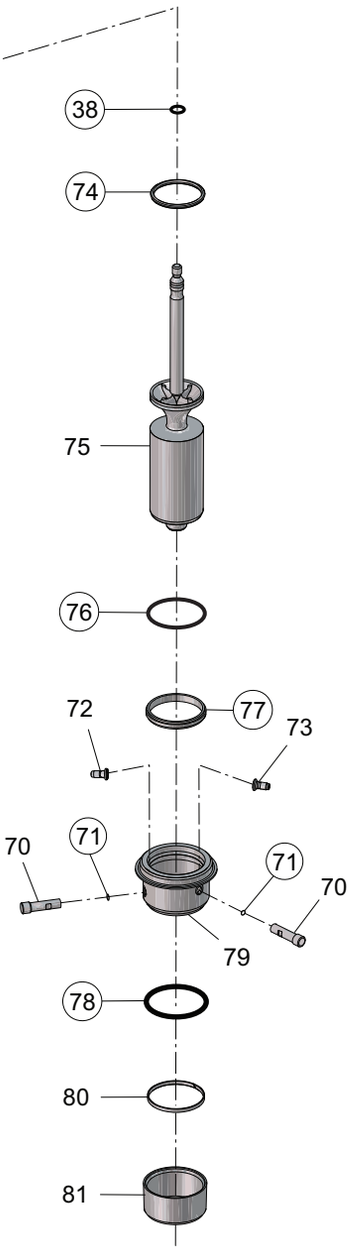

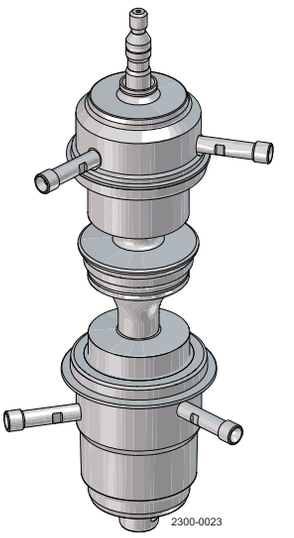

◯ = wear parts
✶ = with SpiralClean in leakage chamber

Pos. 37, see section
See note below service kits.

Pos		Qty	Denomination	DN/OD 38 DN 40 Seat ø53.3	DN/OD 51 DN 50 Seat ø53.3	DN/OD 63.5 DN/OD 76.1 DN 65/DN 80 Seat ø81.3	#2 DN/OD 101.6 DN 100 Seat ø100.3	#1 DN/OD 101.6 DN 100 Seat ø115.3	DN 125 DN 150 Seat ø115.3
Spindle liner									
15		1	Plug	9613414101	9613414101	9613414101	9613414101	9613414101	9613414101
42		1	Spindle liner	9613011601	9613011601	9613009001	9613009001	9613009001	9613009001
43		2	Clamp	9613011801	9613011801	9613009201	9613009201	9613009201	9613009201
44		1	Lock	9613011701	9613011701	9613009101	9613009101	9613009101	9613009101
Extra parts if SpiralClean in vent cavity									
39		2	O-ring, EPDM	9611993492	9611993492	9611993493	9611993493	9611993493	9611993493
40		1	O-ring, EPDM	9611993119	9611993119	9611993119	9611993119	9611993119	9611993119
41		1	Flushing tube	3135710172	3135710172	3135710172	3135710172	3135710172	3135710172
58		1	Spray nozzle, PVDF	9613008801	9613008801	9613014801	9613014801	9613014801	9613014801
Upper sealing element									
45		1	Guide ring	9613008412	9613008413	9613008414	9613008420	9613008415	9613008415
46	♦	1	O-ring, EPDM	9611993655	9611993650	9611993651	9611994407	9611993652	9611993652
47	♦	1	O-ring, EPDM	9611993628	9611993632	9611993636	9611993640	9611993640	9611993644
	♦	1	O-ring, NBR	9611993629	9611993633	9611993637	9611993641	9611993641	9611993645
	♦	1	O-ring, FPM	9611993630	9611993634	9611993638	9611993642	9611993642	9611993646
	♦	1	O-ring, HNBR	9611993631	9611993635	9611993639	9611993643	9611993643	9611993647
48		1	Upper sealing element	9613016101	9613049101	9613049201	9613065901	9613049301	9613049401
49	♦	1	Lip seal, EPDM	9613008516	9613008521	9613008526	9613008548	9613008531	9613008531
	♦	1	Lip seal, NBR	9613008517	9613008522	9613008527	9613008549	9613008532	9613008532
	♦	1	Lip seal, FPM	9613008518	9613008523	9613008528	9613008550	9613008533	9613008533
	♦	1	Lip seal, HNBR	9613008519	9613008524	9613008529	9613008551	9613008534	9613008534
66		2	Flushing tube	9613007901	9613007902	9613007903	9613007904	9613007904	9613007905
67	♦	2	O-ring, EPDM	9611993119	9611993119	9611993119	9611993119	9611993119	9611993119
68		1	Drain	9613008001	9613008001	9613008001	9613008001	9613008001	9613008001
69		1	Nozzle	9613008002	9613008002	9613008002	9613008002	9613008002	9613008002
Upper plug									
54		1	Guide ring, PTFE	9613008401	9613008401	9613008402	9613008402	9613008402	9613008402
55		1	Upper plug	9613014402	9613016302	9613009302	9613091502	9613017302	
56	♦	1	Seal ring, EPDM	9613095106	9613095106	9613095109	9613095119	9613095112	9613095112
	♦	1	Seal ring, NBR	9613095114	9613095114	9613095115	9613095120	9613095116	9613095116
	♦	1	Seal ring, FPM	9613095105	9613095105	9613095108	9613095118	9613095111	9613095111
	♦	1	Seal ring, HNBR	9613095104	9613095104	9613095107	9613095117	9613095110	9613095110
		1	Seal ring set, (10 pcs.) EPDM	8010023165	8010023165	8010023166	8010023167	8010023168	8010023168
57	♦	1	Lip seal, EPDM	9613008706	9613008706	9613008711	9613008711	9613008711	9613008711
	♦	1	Lip seal, NBR	9613008707	9613008707	9613008712	9613008712	9613008712	9613008712
	♦	1	Lip seal, FPM	9613008708	9613008708	9613008713	9613008713	9613008713	9613008713
	♦	1	Lip seal, HNBR	9613008709	9613008709	9613008714	9613008714	9613008714	9613008714
Lower plug									
38	♦	1	O-ring, EPDM	9611993555	9611993555	9611993572	9611993572	9611993572	9611993572
		1	O-ring set, (10 pcs.) EPDM	8010023163	8010023163	8010023164	8010023164	8010023164	8010023164
74	♦	1	Seal ring, EPDM	9613095206	9613095206	9613095209	9613095219	9613095212	9613095212
	♦	1	Seal ring, NBR	9613095214	9613095214	9613095215	9613095220	9613095216	9613095216
	♦	1	Seal ring, FPM Alfa Laval recommends EPDM	9613095205	9613095205	9613095208	9613095218	9613095211	9613095211
	♦	1	Seal ring, HNBR	9613095204	9613095204	9613095207	9613095217	9613095210	9613095210
		1	Seal ring set, (10 pcs.) EPDM	8010023169	8010023169	8010023170	8010023171	8010023172	8010023172
75		1	Lower plug	9613014604	9613016504	9613009404	9613091104	9613017506	9613017508
Lower sealing element									
70		2	Flushing tube	9613007901	9613007902	9613007903	9613007904	9613007904	9613007905
71	♦	2	O-ring, EPDM	9611993119	9611993119	9611993119	9611993119	9611993119	9611993119
72		1	Drain	9613008001	9613008001	9613008001	9613008001	9613008001	9613008001
73		1	Nozzle	9613008002	9613008002	9613008002	9613008002	9613008002	9613008002
76		1	O-ring, EPDM	9611993628	9611993632	9611993636	9611993640	9611993640	9611993644
	♦	1	O-ring, NBR	9611993629	9611993633	9611993637	9611993641	9611993641	9611993645
	♦	1	O-ring, FPM	9611993630	9611993634	9611993638	9611993642	9611993642	9611993646
	♦	1	O-ring, HNBR	9611993631	9611993635	9611993639	9611993643	9611993643	9611993647
77	♦	1	Lip seal, EPDM	9613008516	9613008521	9613008526	9613008548	9613008531	9613008531
	♦	1	Lip seal, NBR	9613008517	9613008522	9613008527	9613008549	9613008532	9613008532
	♦	1	Lip seal, FPM	9613008518	9613008523	9613008528	9613008550	9613008533	9613008533
	♦	1	Lip seal, HNBR	9613008519	9613008524	9613008529	9613008551	9613008534	9613008534
78	♦	1	O-ring, EPDM	9611993655	9611993650	9611993651	9611994407	9611993652	9611993652
79		1	Lower sealing element	9613023801	9613049501	9613049601	9613066101	9613049701	9613049801
80		1	Guide ring, PTFE	9613008412	9613008413	9613008414	9613008420	9613008415	9613008415
81		1	Cover	9613049001	9613049005	9613049006	9613049015	9613049007	9613049007
Extra parts if clamped valve body									
52		1	O-ring, EPDM	9611993628	9611993632	9611993636	9611993640	9611993640	9611993644
		1	O-ring, NBR	9611993629	9611993633	9611993637	9611993641	9611993641	9611993645
		1	O-ring, FPM	9611993630	9611993634	9611993638	9611993642	9611993642	9611993646
		1	O-ring, HNBR	9611993631	9611993635	9611993639	9611993643	9611993643	9611993647

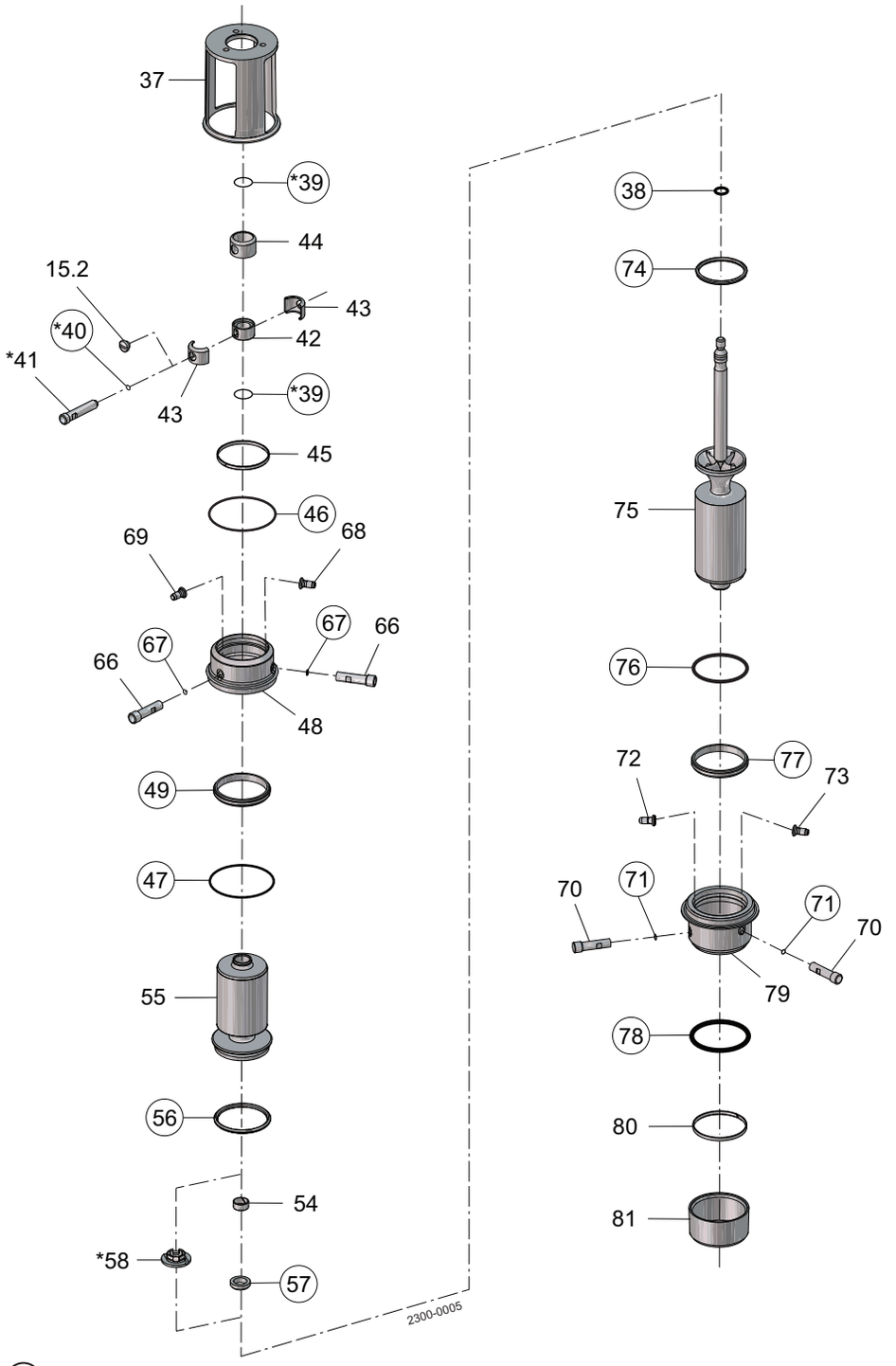

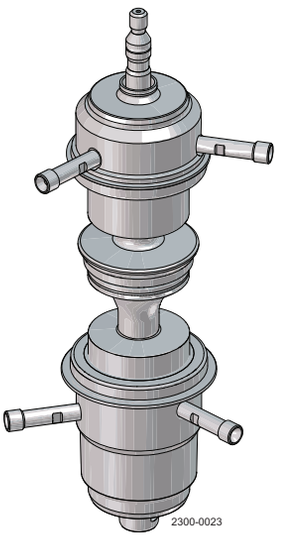

◯ = wear parts
✶ = with SpiralClean in leakage chamber

Pos. 37, see section
See note below service kits.

Pos	Qty	Denomination	DN/OD 38 DN 40 Seat ø53.3	DN/OD 51 DN 50 Seat ø53.3	DN/OD 63.5 DN/OD 76.1 DN 65/DN 80 Seat ø81.3	#2 DN/OD 101.6 DN 100 Seat ø100.3	#1 DN/OD 101.6 DN 100 Seat ø115.3	DN 125 DN 150 Seat ø115.3
Extra parts if clamped valve body								
52	1	O-ring, EPDM	9611993628	9611993632	9611993636	9611993640	9611993640	9611993644
	1	O-ring, NBR	9611993629	9611993633	9611993637	9611993641	9611993641	9611993645
	1	O-ring, FPM	9611993630	9611993634	9611993638	9611993642	9611993642	9611993646
	1	O-ring, HNBR	9611993631	9611993635	9611993639	9611993643	9611993643	9611993647

Pos. 37, see section .

See below service kits.

Service kits

		DN/OD 38 DN 40 Seat ø53.3	DN/OD 51 DN 50 Seat ø53.3	DN/OD 63.5 DN/OD 76.1 DN 65/DN 80 Seat ø81.3	#2 DN/OD 101.6 DN 100 Seat ø100.3	#1 DN/OD 101.6 DN 100 Seat ø115.3	DN 125 DN 150 Seat ø115.3
♦	Service kit, EPDM	9611921670	9611921671	9611921672	9611926354	9611921674	9611926045
♦	Service kit, NBR	9611921676	9611921677	9611921678	9611926355	9611921680	9611926046
♦	Service kit, FPM	9611921682	9611921683	9611921684	9611926356	9611921686	9611926047
♦	Service kit, HNBR	9611921688	9611921689	9611921690	9611926357	9611921692	9611926048

For mixed size housings, the service kit is determined by the smallest size connection on the valve.
One exception is any housing with 6” connections will always refer to the 6” service kits listed below:

♦	Service kit, EPDM	9611926093	9611926125	9611926189	9611926394	9611926253
♦	Service kit, NBR	9611926094	9611926126	9611926190	9611926395	9611926254
♦	Service kit, FPM	9611926095	9611926127	9611926191	9611926396	9611926255
♦	Service kit, HNBR	9611926096	9611926128	9611926192	9611926397	9611926256

Parts marked with ♦ are included in the service kit.
#1 = Serial no. below 1030000 - manufactured before October 1st 2003
#2 = Serial no. above 1030000 - manufactured after October 1st 2003

NOTE!
If different connection size on upper and lower body, except for size 6", it is always the smallest body that determines the service kit.
If clamped valve body an extra O-ring (pos. 52) is required.
If SpiralClean in leakage chamber extra O-rings (2x pos. 39 and 1x pos. 40) is required.
Spare parts for mix size please refer to Configurator in AL Anytime

NOTE!
All FPM service kits are supplied with EPDM seal ring, pos. 74.

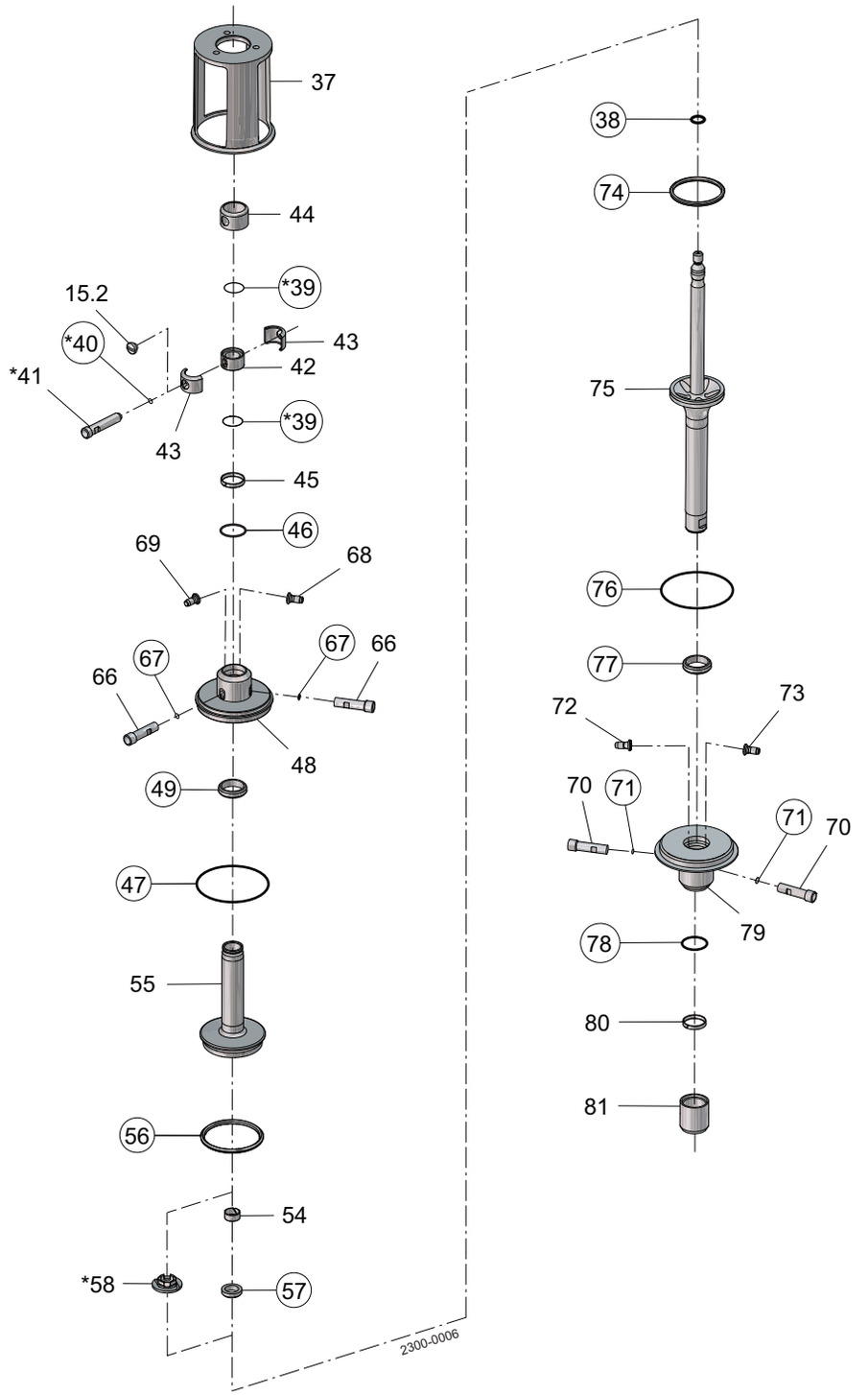

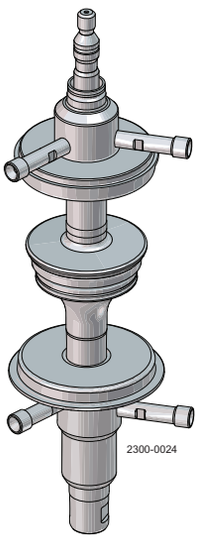

◯ = wear parts
✶ = with SpiralClean in leakage chamber

Pos. 37, see section
See note below service kits.

Pos		Qty	Denomination	DN/OD 51 DN 50 Seat ø53.3	DN/OD 63.5 DN/OD 76.1 DN 65/DN 80 Seat ø81.3	#2 DN/OD 101.6 DN 100 Seat ø100.3	#1 DN/OD 101.6 DN 100 Seat ø115.3	DN 125 DN 150 Seat ø115.3
Spindle liner								
15		1	Plug	9613414101	9613414101	9613414101	9613414101	9613414101
42		1	Spindle liner	9613011601	9613009001	9613009001	9613009001	9613009001
43		2	Clamp	9613011801	9613009201	9613009201	9613009201	9613009201
44		1	Lock	9613011701	9613009101	9613009101	9613009101	9613009101
Extra parts if SpiralClean in vent cavity								
39		2	O-ring, EPDM	9611993492	9611993493	9611993493	9611993493	9611993493
40		1	O-ring, EPDM	9611993119	9611993119	9611993119	9611993119	9611993119
41		1	Flushing tube	3135710172	3135710172	3135710172	3135710172	3135710172
58		1	Spray nozzle, PVDF	9613008801	9613014801	9613014801	9613014801	9613014801
Upper sealing element								
45		1	Guide ring, PTFE	9613008416	9613008417	9613008417	9613008417	9613008417
46	♦	1	O-ring, EPDM	9611993653	9611993654	9611993654	9611993654	9611993654
47	♦	1	O-ring, EPDM	9611993632	9611993636	9611993640	9611993640	9611993644
	♦	1	O-ring, NBR	9611993633	9611993637	9611993641	9611993641	9611993645
	♦	1	O-ring, FPM	9611993634	9611993638	9611993642	9611993642	9611993646
	♦	1	O-ring, HNBR	9611993635	9611993639	9611993643	9611993643	9611993647
48		1	Upper sealing element	9613014301	9613006501	9613018901	9613018901	9613017101
49	♦	1	Lip seal, EPDM	9613008501	9613008511	9613008511	9613008511	9613008511
	♦	1	Lip seal, NBR	9613008502	9613008512	9613008512	9613008512	9613008512
	♦	1	Lip seal, FPM	9613008503	9613008513	9613008513	9613008513	9613008513
	♦	1	Lip seal, HNBR	9613008504	9613008514	9613008514	9613008514	9613008514
66		2	Flushing tube	9613007902	9613007903	9613007904	9613007904	9613007905
67	♦	2	O-ring, EPDM	9611993119	9611993119	9611993119	9611993119	9611993119
68		1	Drain	9613008001	9613008001	9613008001	9613008001	9613008001
69		1	Nozzle	9613008002	9613008002	9613008002	9613008002	9613008002
Upper plug								
54		1	Guide ring, PTFE	9613008401	9613008402	9613008402	9613008402	9613008402
55		1	Upper plug	9613016202	9613008202	9613091402		9613017204
56	♦	1	Seal ring, EPDM	9613095106	9613095109	9613095119	9613095112	9613095112
	♦	1	Seal ring, NBR	9613095114	9613095115	9613095120	9613095116	9613095116
	♦	1	Seal ring, FPM	9613095105	9613095108	9613095118	9613095111	9613095111
	♦	1	Seal ring, HNBR	9613095104	9613095107	9613095117	9613095110	9613095110
		1	Seal ring set, (10 pcs.) EPDM	8010023165	8010023166	8010023167	8010023168	8010023168
57	♦	1	Lip seal, EPDM	9613008706	9613008711	9613008711	9613008711	9613008711
	♦	1	Lip seal, NBR	9613008707	9613008712	9613008712	9613008712	9613008712
	♦	1	Lip seal, FPM	9613008708	9613008713	9613008713	9613008713	9613008713
	♦	1	Lip seal, HNBR	9613008709	9613008714	9613008714	9613008714	9613008714
Lower plug								
38	♦	1	O-ring, EPDM	9611993555	9611993572	9611993572	9611993572	9611993572
		1	O-ring set, (10 pcs.) EPDM	8010023163	8010023164	8010023164	8010023164	8010023164
74	♦	1	Seal ring, EPDM	9613095206	9613095209	9613095219	9613095212	9613095212
	♦	1	Seal ring, NBR	9613095214	9613095215	9613095220	9613095216	9613095216
	♦	1	Seal ring, FPM Alfa Laval recommends EPDM	9613095205	9613095208	9613095218	9613095211	9613095211
	♦	1	Seal ring, HNBR	9613095204	9613095207	9613095217	9613095210	9613095210
		1	Seal ring set, (10 pcs.) EPDM	8010023169	8010023170	8010023171	8010023172	8010023172
75		1	Lower plug	9613016404		9613091004		9613017408
Lower sealing element								
70		2	Flushing tube	9613007902	9613007903	9613007904	9613007904	9613007905
71	♦	2	O-ring, EPDM	9611993119	9611993119	9611993119	9611993119	9611993119
72		1	Drain	9613008001	9613008001	9613008001	9613008001	9613008001
73		1	Nozzle	9613008002	9613008002	9613008002	9613008002	9613008002
76	♦	1	O-ring, EPDM	9611993632	9611993636	9611993640	9611993640	9611993644
	♦	1	O-ring, NBR	9611993633	9611993637	9611993641	9611993641	9611993645
	♦	1	O-ring, FPM	9611993634	9611993638	9611993642	9611993642	9611993646
	♦	1	O-ring, HNBR	9611993635	9611993639	9611993643	9611993643	9611993647
77	♦	1	Lip seal, EPDM	9613008501	9613008511	9613008511	9613008511	9613008511
	♦	1	Lip seal, NBR	9613008502	9613008512	9613008512	9613008512	9613008512
	♦	1	Lip seal, FPM	9613008503	9613008513	9613008513	9613008513	9613008513
	♦	1	Lip seal, HNBR	9613008504	9613008514	9613008514	9613008514	9613008514
78	♦	1	O-ring, EPDM	9611993653	9611993654	9611993654	9611993654	9611993654
79		1	Lower sealing element	9613024001	9613024201	9613024401	9613024401	9613024601
80		1	Guide ring, PTFE	9613008416	9613008417	9613008417	9613008417	9613008417
81		1	Cover	9613049002	9613049003	9613049004	9613049004	9613049004
Extra parts if clamped valve body								
52		1	O-ring, EPDM	9611993632	9611993636	9611993640	9611993640	9611993644
		1	O-ring, NBR	9611993633	9611993637	9611993641	9611993641	9611993645
		1	O-ring, FPM	9611993634	9611993638	9611993642	9611993642	9611993646
		1	O-ring, HNBR	9611993635	9611993639	9611993643	9611993643	9611993647

Pos. 37, see section

See note below service kits.

1.7

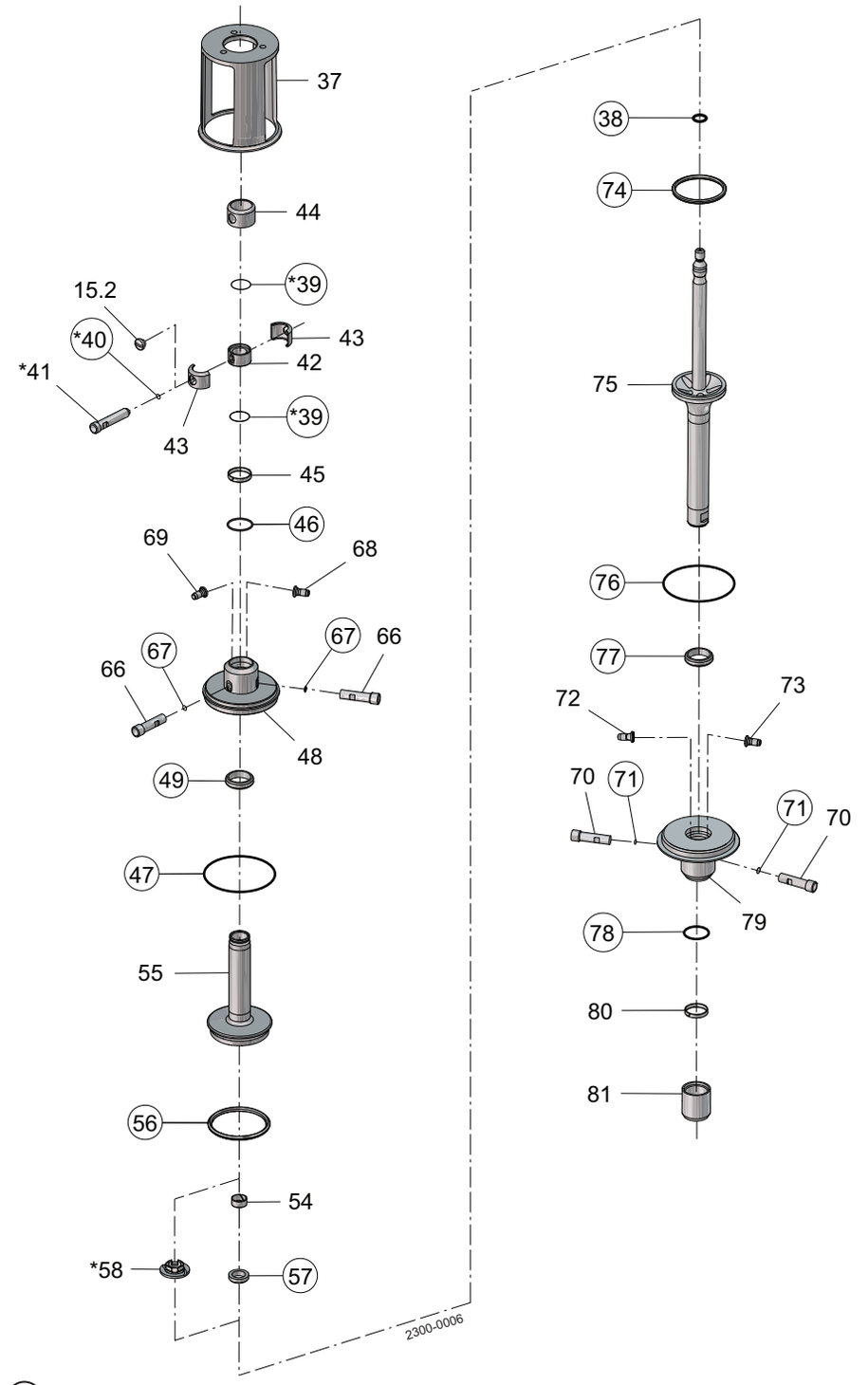

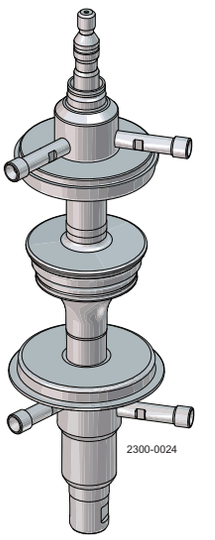

◯ = wear parts

✶ = with SpiralClean in leakage chamber

	DN/OD 51 DN 50 Seat ø53.3	DN/OD 63.5 DN/OD 76.1 DN 65/DN 80 Seat ø81.3	#2 DN/OD 101.6 DN 100 Seat ø100.3	#1 DN/OD 101.6 DN 100 Seat ø115.3	DN 125 DN 150 Seat ø115.3
♦ Service kit, EPDM	9611921695	9611921697	9611926358	9611921699	9611926049
♦ Service kit, NBR	9611921701	9611921703	9611926359	9611921705	9611926050
♦ Service kit, FPM	9611921707	9611921709	9611926360	9611921711	9611926051
♦ Service kit, HNBR	9611921713	9611921715	9611926361	9611921717	9611926052

For mixed size housings, the service kit is determined by the smallest size connection on the valve.
One exception is any housing with 6" connections will always refer to the 6" service kits listed below:

♦ Service kit, EPDM	9611926129	9611926193	9611926398	9611926257
♦ Service kit, NBR	9611926130	9611926194	9611926399	9611926258
♦ Service kit, FPM	9611926131	9611926195	9611926400	9611926259
♦ Service kit, HNBR	9611926132	9611926196	9611926401	9611926260

Parts marked with ♦ are included in the service kit.
#1 = Serial no. below 1030000 - manufactured before October 1st 2003
#2 = Serial no. above 1030000 - manufactured after October 1st 2003

NOTE!
If different connection size on upper and lower body, except for size 6", it is always the smallest body that determines the service kit.
If clamped valve body an extra O-ring (pos. 52) is required.
If SpiralClean in leakage chamber extra O-rings (2x pos. 39 and 1x pos. 40) is required.
Spare parts for mix size please refer to Configurator in AL Anytime

NOTE!
All FPM service kits are supplied with EPDM seal ring, pos. 74.

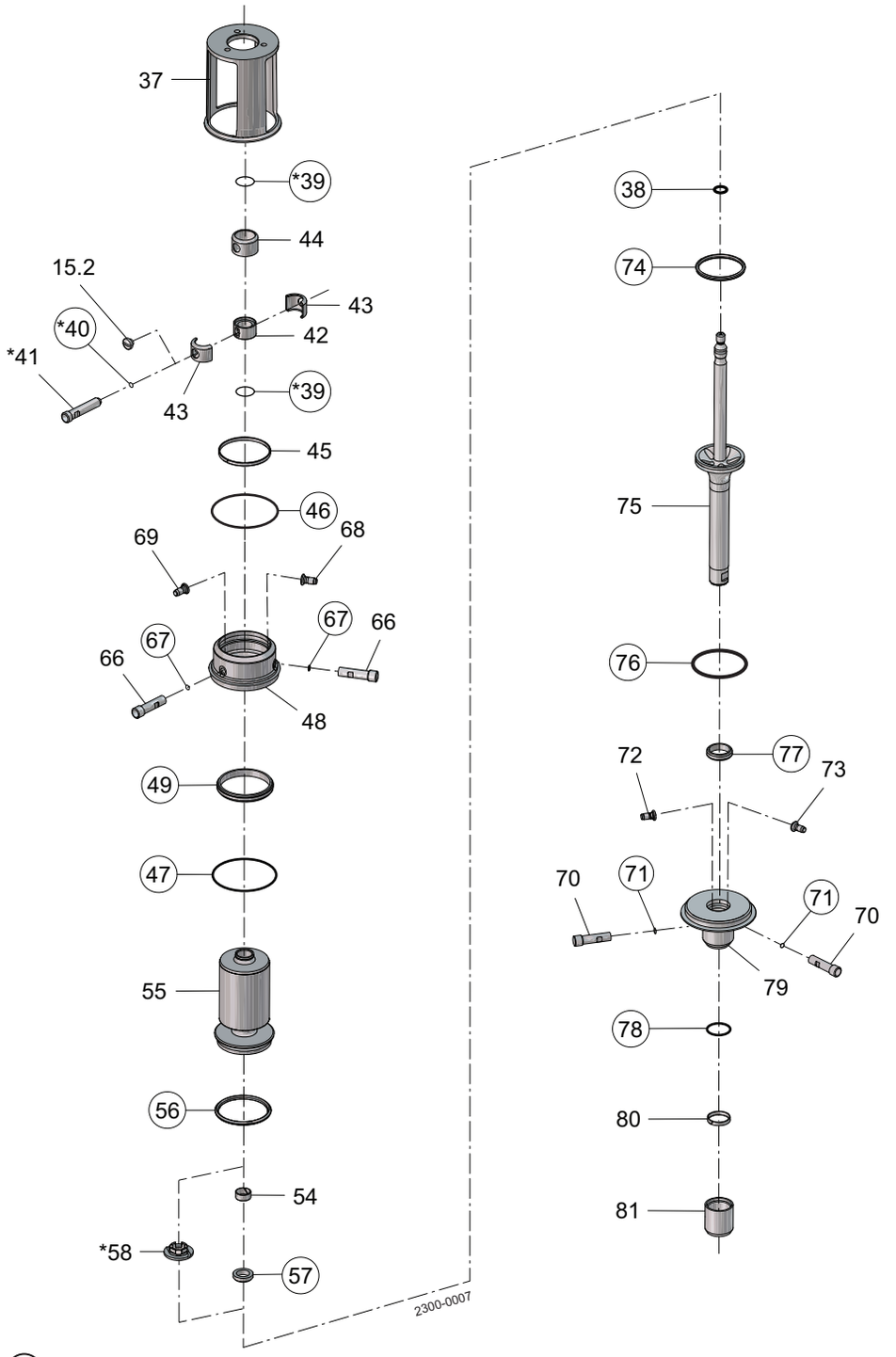

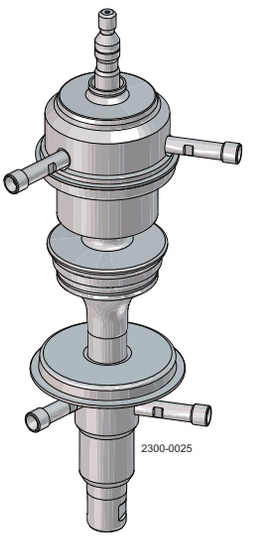

◯ = wear parts
✶ = with SpiralClean in leakage chamber

Pos. 37, see section
See note below service kits.

Pos		Qty	Denomination	DN/OD 51 DN 50 Seat ø53.3	DN/OD 63.5 DN/OD 76.1 DN 65/DN80 Seat ø81.3	#2 DN/OD 101.6 DN 100 Seat ø100.3	#1 DN/OD 101.6 DN 100 Seat ø115.3	DN 125 DN 150 Seat ø115.3
Spindle liner								
15		1	Plug	9613414101	9613414101	9613414101	9613414101	9613414101
42		1	Spindle liner	9613011601	9613009001	9613009001	9613009001	9613009001
43		2	Clamp	9613011801	9613009201	9613009201	9613009201	9613009201
44		1	Lock	9613011701	9613009101	9613009101	9613009101	9613009101
Extra parts if SpiralClean in vent cavity								
39		2	O-ring, EPDM	9611993492	9611993493	9611993493	9611993493	9611993493
40		1	O-ring, EPDM	9611993119	9611993119	9611993119	9611993119	9611993119
41		1	Flushing tube	3135710172	3135710172	3135710172	3135710172	3135710172
58		1	Spray nozzle, PVDF	9613008801	9613014801	9613014801	9613014801	9613014801
Upper sealing element								
45		1	Guide ring, PTFE	9613008413	9613008414	9613008420	9613008415	9613008415
46	♦	1	O-ring, EPDM	9611993650	9611993651	9611994407	9611993652	9611993652
47	♦	1	O-ring, EPDM	9611993632	9611993636	9611993640	9611993640	9611993644
	♦	1	O-ring, NBR	9611993633	9611993637	9611993641	9611993641	9611993645
	♦	1	O-ring, FPM	9611993634	9611993638	9611993642	9611993642	9611993646
	♦	1	O-ring, HNBR	9611993635	9611993639	9611993643	9611993643	9611993647
48		1	Upper sealing element	9613049101	9613049201	9613065901	9613049301	9613049401
49	♦	1	Lip seal, EPDM	9613008521	9613008526	9613008548	9613008531	9613008531
	♦	1	Lip seal, NBR	9613008522	9613008527	9613008549	9613008532	9613008532
	♦	1	Lip seal, FPM	9613008523	9613008528	9613008550	9613008533	9613008533
	♦	1	Lip seal, HNBR	9613008524	9613008529	9613008551	9613008534	9613008534
66		2	Flushing tube	9613007902	9613007903	9613007904	9613007904	9613007905
67	♦	2	O-ring, EPDM	9611993119	9611993119	9611993119	9611993119	9611993119
68		1	Drain	9613008001	9613008001	9613008001	9613008001	9613008001
69		1	Nozzle	9613008002	9613008002	9613008002	9613008002	9613008002
Upper plug								
54		1	Guide ring, PTFE	9613008401	9613008402	9613008402	9613008402	9613008402
55		1	Upper plug	9613016302	9613009302	9613091502	9613017302	
56	♦	1	Seal ring, EPDM	9613095106	9613095109	9613095119	9613095112	9613095112
	♦	1	Seal ring, NBR	9613095114	9613095115	9613095120	9613095116	9613095116
	♦	1	Seal ring, FPM	9613095105	9613095108	9613095118	9613095111	9613095111
	♦	1	Seal ring, HNBR	9613095104	9613095107	9613095117	9613095110	9613095110
		1	Seal ring set, (10 pcs.) EPDM	8010023165	8010023166	8010023167	8010023168	8010023168
57	♦	1	Lip seal, EPDM	9613008706	9613008711	9613008711	9613008711	9613008711
	♦	1	Lip seal, NBR	9613008707	9613008712	9613008712	9613008712	9613008712
	♦	1	Lip seal, FPM	9613008708	9613008713	9613008713	9613008713	9613008713
	♦	1	Lip seal, HNBR	9613008709	9613008714	9613008714	9613008714	9613008714
Lower plug								
38	♦	1	O-ring, EPDM	9611993555	9611993572	9611993572	9611993572	9611993572
		1	O-ring set, (10 pcs.) EPDM	8010023163	8010023164	8010023164	8010023164	8010023164
74	♦	1	Seal ring, EPDM	9613095206	9613095209	9613095219	9613095212	9613095212
	♦	1	Seal ring, NBR	9613095214	9613095215	9613095220	9613095216	9613095216
	♦	1	Seal ring, FPM Alfa Laval recommends EPDM	9613095205	9613095208	9613095218	9613095211	9613095211
	♦	1	Seal ring, HNBR	9613095204	9613095207	9613095217	9613095210	9613095210
		1	Seal ring set, (10 pcs.) EPDM	8010023169	8010023170	8010023171	8010023172	8010023172
75		1	Lower plug	9613016404		9613091004		9613017408
Lower sealing element								
70		2	Flushing tube	9613007902	9613007903	9613007904	9613007904	9613007905
71	♦	2	O-ring, EPDM	9611993119	9611993119	9611993119	9611993119	9611993119
72		1	Drain	9613008001	9613008001	9613008001	9613008001	9613008001
73		1	Nozzle	9613008002	9613008002	9613008002	9613008002	9613008002
76		1	O-ring, EPDM	9611993632	9611993636	9611993640	9611993640	9611993644
	♦	1	O-ring, NBR	9611993633	9611993637	9611993641	9611993641	9611993645
	♦	1	O-ring, FPM	9611993634	9611993638	9611993642	9611993642	9611993646
	♦	1	O-ring, HNBR	9611993635	9611993639	9611993643	9611993643	9611993647
77	♦	1	Lip seal, EPDM	9613008501	9613008511	9613008511	9613008511	9613008511
	♦	1	Lip seal, NBR	9613008502	9613008512	9613008512	9613008512	9613008512
	♦	1	Lip seal, FPM	9613008503	9613008513	9613008513	9613008513	9613008513
	♦	1	Lip seal, HNBR	9613008504	9613008514	9613008514	9613008514	9613008514
78	♦	1	O-ring, EPDM	9611993653	9611993654	9611993654	9611993654	9611993654
79		1	Lower sealing element	9613024001	9613024201	9613024401	9613024401	9613024601
80		1	Guide ring, PTFE	9613008416	9613008417	9613008417	9613008417	9613008417
81		1	Cover	9613049002	9613049003	9613049004	9613049004	9613049004
Extra parts if clamped valve body								
52		1	O-ring, EPDM	9611993632	9611993636	9611993640	9611993640	9611993644
		1	O-ring, NBR	9611993633	9611993637	9611993641	9611993641	9611993645
		1	O-ring, FPM	9611993634	9611993638	9611993642	9611993642	9611993646
		1	O-ring, HNBR	9611993635	9611993639	9611993643	9611993643	9611993647

Pos. 37, see section

See note below service kits.

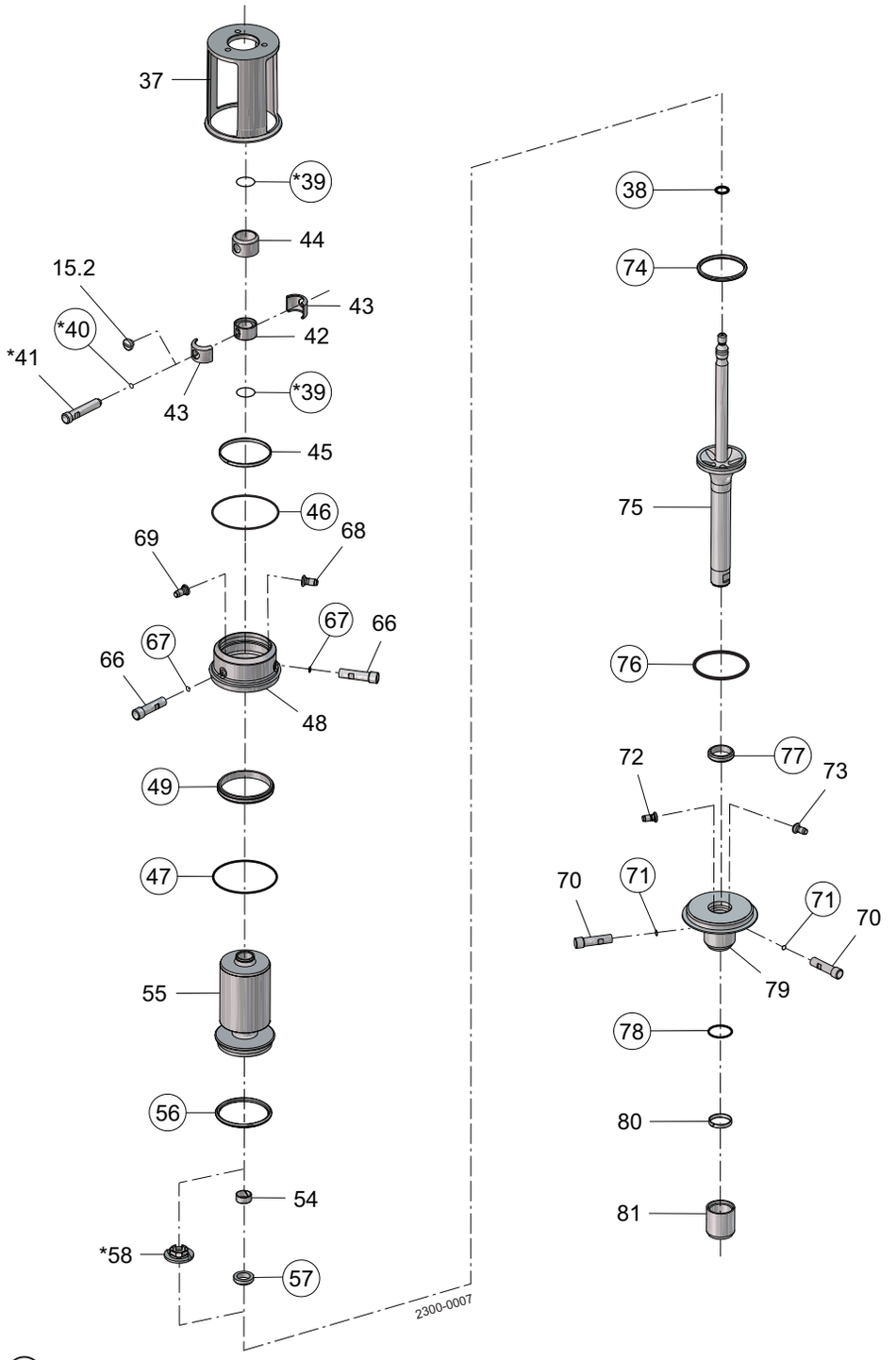

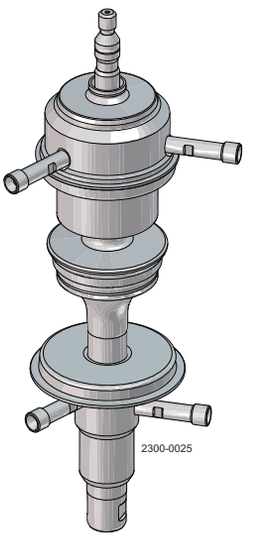

◯ = wear parts

✶ = with SpiralClean in leakage chamber

	DN/OD 51 DN 50 Seat ø53.3	DN/OD 63.5 DN/OD 76.1 DN 65/DN 80 Seat ø81.3	#2 DN/OD 101.6 DN 100 Seat ø100.3	#1 DN/OD 101.6 DN 100 Seat ø115.3	DN 125 DN 150 Seat ø115.3
♦ Service kit, EPDM	9611921647	9611921648	9611926350	9611921650	9611926041
♦ Service kit, NBR	9611921653	9611921654	9611926351	9611921656	9611926042
♦ Service kit, FPM	9611921659	9611921660	9611926352	9611921662	9611926043
♦ Service kit, HNBR	9611921665	9911921666	9611926353	9611921668	9611926044

For mixed size housings, the service kit is determined by the smallest size connection on the valve.
One exception is any housing with 6" connections will always refer to the 6" service kits listed below:

♦ Service kit, EPDM	9611926121	9611926185	9611926390	9611926249
♦ Service kit, NBR	9611926122	9611926186	9611926391	9611926250
♦ Service kit, FPM	9611926123	9611926187	9611926392	9611926251
♦ Service kit, HNBR	9611926124	9611926188	9611926393	9611926252

Parts marked with ♦ are included in the service kit.
#1 = Serial no. below 1030000 - manufactured before October 1st 2003
#2 = Serial no. above 1030000 - manufactured after October 1st 2003

NOTE!
If different connection size on upper and lower body, except for size 6", it is always the smallest body that determines the service kit.
If clamped valve body an extra O-ring (pos. 52) is required.
If SpiralClean in leakage chamber extra O-rings (2x pos. 39 and 1x pos. 40) is required.
Spare parts for mix size please refer to Configurator in AL Anytime

NOTE!
All FPM service kits are supplied with EPDM seal ring, pos. 74.

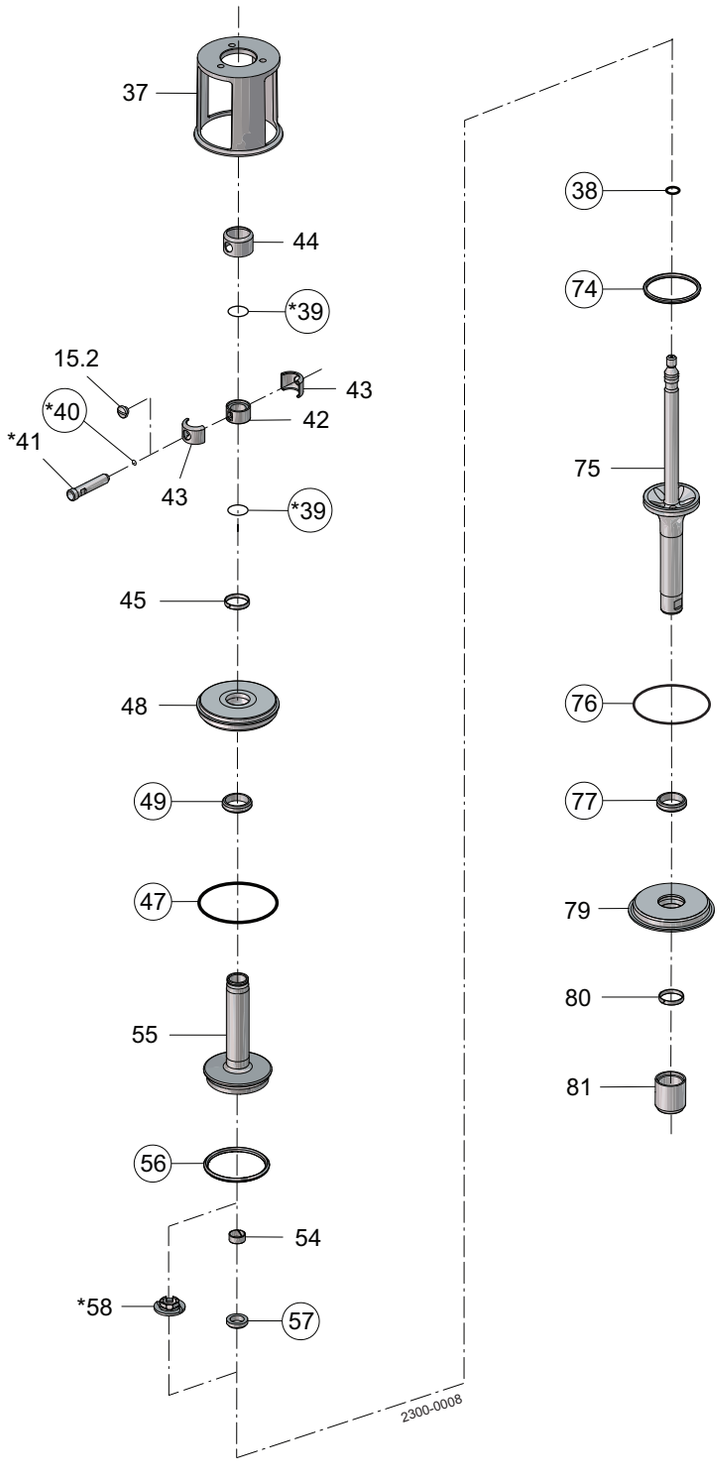

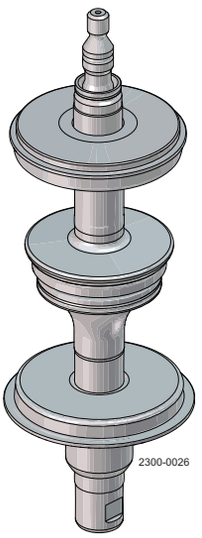

◯ = wear parts
✶ = with SpiralClean in leakage chamber

Pos. 37, see section
See note below service kits.

Pos		Qty	Denomination	DN/OD 51 DN 50 Seat ø53.3	DN/OD 63.5 DN/OD 76.1 DN 65/DN 80 Seat ø81.3	#2 DN/OD 101.6 DN 100 Seat ø100.3	#1 DN/OD 101.6 DN 100 Seat ø115.3	DN 125 DN 150 Seat ø115.3
Spindle liner								
15		1	Plug	9613414101	9613414101	9613414101	9613414101	9613414101
42		1	Spindle liner	9613011601	9613009001	9613009001	9613009001	9613009001
43		2	Clamp	9613011801	9613009201	9613009201	9613009201	9613009201
44		1	Lock	9613011701	9613009101	9613009101	9613009101	9613009101
Extra parts if SpiralClean in vent cavity								
39		2	O-ring, EPDM	9611993492	9611993493	9611993493	9611993493	9611993493
40		1	O-ring, EPDM	9611993119	9611993119	9611993119	9611993119	9611993119
41		1	Flushing tube	3135710172	3135710172	3135710172	3135710172	3135710172
58		1	Spray nozzle, PVDF	9613008801	9613014801	9613014801	9613014801	9613014801
Upper sealing element								
45		1	Guide ring, PTFE	9613008416	9613008417	9613008417	9613008417	9613008417
47	♦	1	O-ring, EPDM	9611993632	9611993636	9611993640	9611993640	9611993644
	♦	1	O-ring, NBR	9611993633	9611993637	9611993641	9611993641	9611993645
	♦	1	O-ring, FPM	9611993634	9611993638	9611993642	9611993642	9611993646
	♦	1	O-ring, HNBR	9611993635	9611993639	9611993643	9611993643	9611993647
48		1	Upper sealing element	9613014201	9613006401	9613018801	9613018801	9613017001
49	♦	1	Lip seal, EPDM	9613008501	9613008511	9613008511	9613008511	9613008511
	♦	1	Lip seal, NBR	9613008502	9613008512	9613008512	9613008512	9613008512
	♦	1	Lip seal, FPM	9613008503	9613008513	9613008513	9613008513	9613008513
	♦	1	Lip seal, HNBR	9613008504	9613008514	9613008514	9613008514	9613008514
Upper plug								
54		1	Guide ring, PTFE	9613008401	9613008402	9613008402	9613008402	9613008402
55		1	Upper plug	9613016201	9613008201	9613091401	9613017201	9613017203
56	♦	1	Seal ring, EPDM	9613095106	9613095109	9613095119	9613095112	9613095112
	♦	1	Seal ring, NBR	9613095114	9613095115	9613095120	9613095116	9613095116
	♦	1	Seal ring, FPM	9613095105	9613095108	9613095118	9613095111	9613095111
	♦	1	Seal ring, HNBR	9613095104	9613095107	9613095117	9613095110	9613095110
		1	Seal ring set, (10 pcs.) EPDM	8010023165	8010023166	8010023167	8010023168	8010023168
57	♦	1	Lip seal, EPDM	9613008706	9613008711	9613008711	9613008711	9613008711
	♦	1	Lip seal, NBR	9613008707	9613008712	9613008712	9613008712	9613008712
	♦	1	Lip seal, FPM	9613008708	9613008713	9613008713	9613008713	9613008713
	♦	1	Lip seal, HNBR	9613008709	9613008714	9613008714	9613008714	9613008714
Lower plug								
38	♦	1	O-ring, EPDM	9611993555	9611993572	9611993572	9611993572	9611993572
		1	O-ring set, (10 pcs.) EPDM	8010023163	8010023164	8010023164	8010023164	8010023164
74	♦	1	Seal ring, EPDM	9613095206	9613095209	9613095219	9613095212	9613095212
	♦	1	Seal ring, NBR	9613095214	9613095215	9613095220	9613095216	9613095216
	♦	1	Seal ring, FPM, Alfa Laval recommends EPDM	9613095205	9613095208	9613095218	9613095211	9613095211
	♦	1	Seal ring, HNBR	9613095204	9613095207	9613095217	9613095210	9613095210
		1	Seal ring set, (10 pcs.) EPDM	8010023169	8010023170	8010023171	8010023172	8010023172
75		1	Lower plug	9613016401	9613008301	9613091001	9613017401	9613017403
Lower sealing element								
76	♦	1	O-ring, EPDM	9611993632	9611993636	9611993640	9611993640	9611993644
	♦	1	O-ring, NBR	9611993633	9611993637	9611993641	9611993641	9611993645
	♦	1	O-ring, FPM	9611993634	9611993638	9611993642	9611993642	9611993646
	♦	1	O-ring, HNBR	9611993635	9611993639	9611993643	9611993643	9611993647
77	♦	1	Lip seal, EPDM	9613008501	9613008511	9613008511	9613008511	9613008511
	♦	1	Lip seal, NBR	9613008502	9613008512	9613008512	9613008512	9613008512
	♦	1	Lip seal, FPM	9613008503	9613008513	9613008513	9613008513	9613008513
	♦	1	Lip seal, HNBR	9613008504	9613008514	9613008514	9613008514	9613008514
79		1	Lower sealing element	9613023901	9613024101	9613024301	9613024301	9613024501
80		1	Guide ring, PTFE	9613008416	9613008417	9613008417	9613008417	9613008417
81		1	Cover	9613049002	9613049003	9613049004	9613049004	9613049004
Extra parts if clamped valve body								
52		1	O-ring, EPDM	9611993632	9611993636	9611993640	9611993640	9611993644
		1	O-ring, NBR	9611993633	9611993637	9611993641	9611993641	9611993645
		1	O-ring, FPM	9611993634	9611993638	9611993642	9611993642	9611993646
		1	O-ring, HNBR	9611993635	9611993639	9611993643	9611993643	9611993647

Pos. 37, see section

See note below service kits.

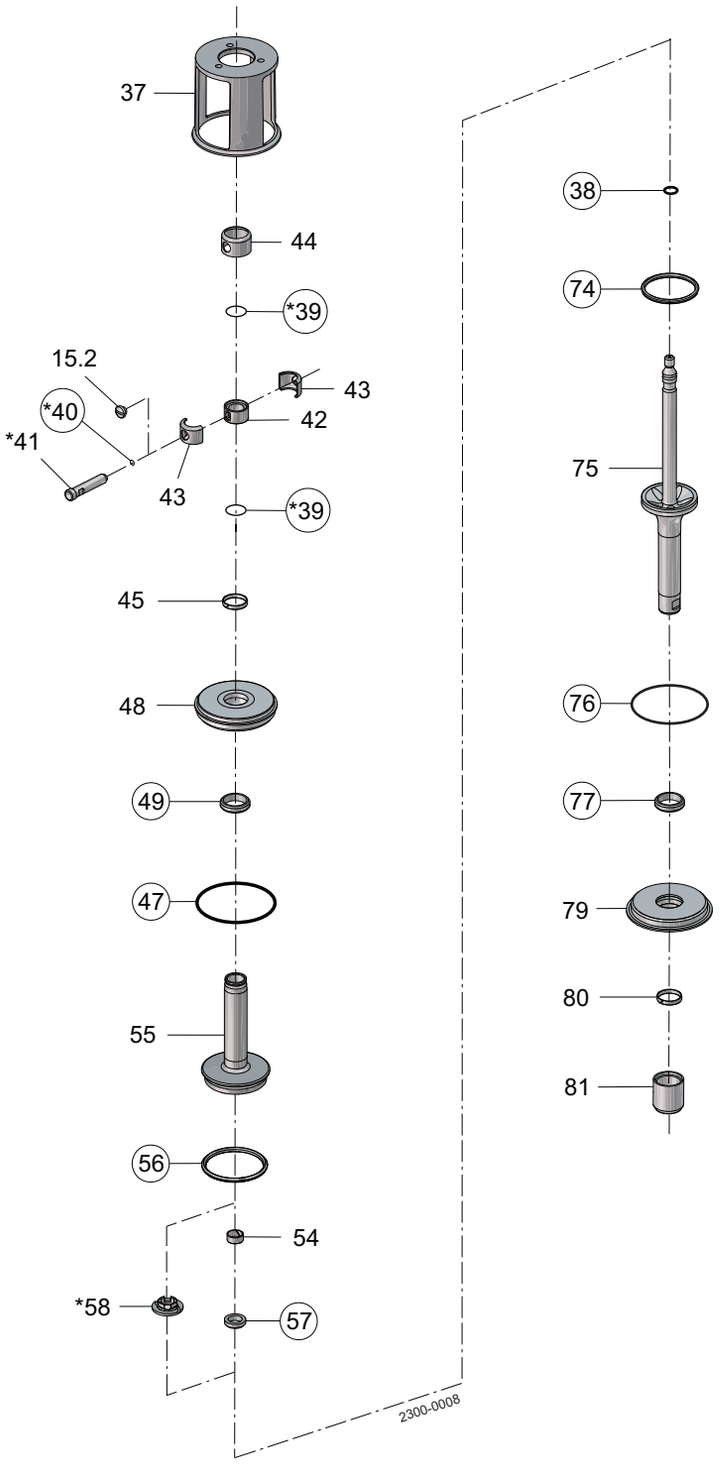

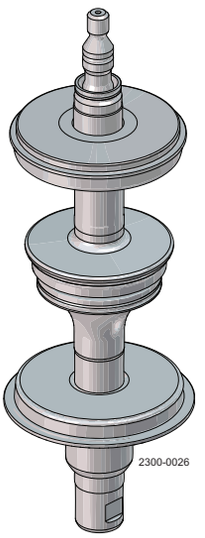

◯ = wear parts

✶ = with SpiralClean in leakage chamber

	DN/OD 51 DN 50 Seat ø53.3	DN/OD 63.5 DN/OD 76.1 DN 65/DN 80 Seat ø81.3	#2 DN/OD 101.6 DN 100 Seat ø100.3	#1 DN/OD 101.6 DN 100 Seat ø115.3	DN 125 DN 150 Seat ø115.3
♦ Service kit, EPDM	9611921743	9611921745	9611926362	9611921747	9611926057
♦ Service kit, NBR	9611921749	9611921751	9611926363	9611921753	9611926058
♦ Service kit, FPM	9611921755	9611921757	9611926364	9611921759	9611926059
♦ Service kit, HNBR	9611921761	9611921763	9611926365	9611921765	9611926060

For mixed size housings, the service kit is determined by the smallest size connection on the valve.
One exception is any housing with 6" connections will always refer to the 6" service kits listed below:

♦ Service kit, EPDM	9611926137	9611926201	9611926202	9611926265
♦ Service kit, NBR	9611926138	9611926202	9611926203	9611926266
♦ Service kit, FPM	9611926139	9611926203	9611926404	9611926267
♦ Service kit, HNBR	9611926140	9611926204	9611926405	9611926268

Parts marked with ♦ are incluided in the service kit.
#1 = Serial no. below 1030000 - manufactured before October 1st 2003
#2 = Serial no. above 1030000 - manufactured after October 1st 2003

NOTE!
If different connection size on upper and lower body, except for size 6", it is always the smallest body that determines the service kit.
If clamped valve body an extra O-ring (pos. 52) is required.
If SpiralClean in leakage chamber extra O-rings (2x pos. 39 and 1x pos. 40) is required.
Spare parts for mix size please refer to Configurator in AL Anytime

NOTE!
All FPM service kits are supplied with EPDM seal ring, pos. 74.

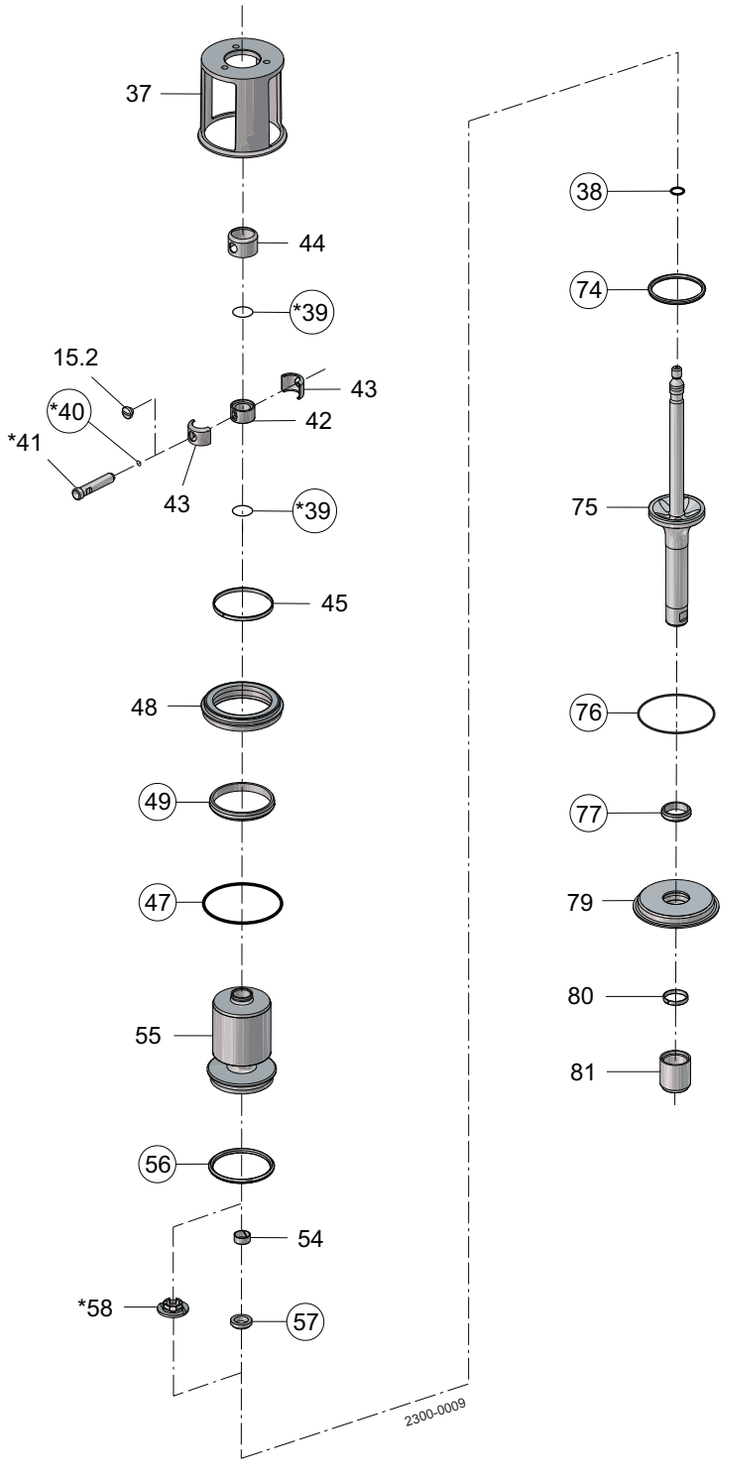

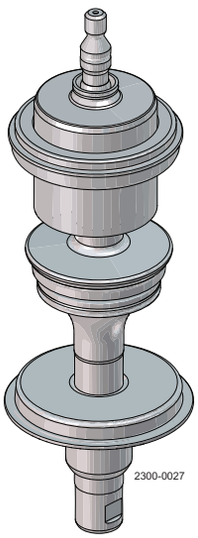

◯ = wear parts
✶ = with SpiralClean in leakage chamber

Pos. 37, see section
See note below service kits.

Pos		Qty	Denomination	DN/OD 51 DN 50 seat ø53.3	DN/OD 63.5 DN/OD 76.1 DN 65/DN 80 seat ø81.3	#2 DN/OD 101.6 DN 100 seat ø100.3	#1 DN/OD 101.6 DN 100 seat ø115.3	DN 125 DN 150 seat ø115.3
Spindle liner								
15		1	Plug	9613414101	9613414101	9613414101	9613414101	9613414101
42		1	Spindle liner	9613011601	9613009001	9613009001	9613009001	9613009001
43		2	Clamp	9613011801	9613009201	9613009201	9613009201	9613009201
44		1	Lock	9613011701	9613009101	9613009101	9613009101	9613009101
Extra parts if SpiralClean in vent cavity								
39		2	O-ring, EPDM	9611993492	9611993493	9611993493	9611993493	9611993493
40		1	O-ring, EPDM	9611993119	9611993119	9611993119	9611993119	9611993119
41		1	Flushing tube	3135710172	3135710172	3135710172	3135710172	3135710172
58		1	Spray nozzle, PVDF	9613008801	9613014801	9613014801	9613014801	9613014801
Upper sealing element								
45		1	Guide ring, PTFE	9613008413	9613008414	9613008420	9613008415	9613008415
47	♦	1	O-ring, EPDM	9611993632	9611993636	9611993640	9611993640	9611993644
	♦	1	O-ring, NBR	9611993633	9611993637	9611993641	9611993641	9611993645
	♦	1	O-ring, FPM	9611993634	9611993638	9611993642	9611993642	9611993646
	♦	1	O-ring, HNBR,	9611993635	9611993639	9611993643	9611993643	9611993647
48		1	Upper sealing element	9613014202	9613006402	9613066001	9613018802	9613017002
49	♦	1	Lip seal, EPDM	9613008521	9613008526	9613008548	9613008531	9613008531
	♦	1	Lip seal, NBR	9613008522	9613008527	9613008549	9613008532	9613008532
	♦	1	Lip seal, FPM	9613008523	9613008528	9613008550	9613008533	9613008533
	♦	1	Lip seal, HNBR	9613008524	9613008529	9613008551	9613008534	9613008534
Upper plug								
54		1	Guide ring, PTFE	9613008401	9613008402	9613008402	9613008402	9613008402
55		1	Upper plug	9613016301	9613009301	9613091501	9613017301	9613017303
56	♦	1	Seal ring, EPDM	9613095106	9613095109	9613095119	9613095112	9613095112
	♦	1	Seal ring, NBR	9613095114	9613095115	9613095120	9613095116	9613095116
	♦	1	Seal ring, FPM	9613095105	9613095108	9613095118	9613095111	9613095111
	♦	1	Seal ring, HNBR	9613095104	9613095107	9613095117	9613095110	9613095110
		1	Seal ring set, (10 pcs.) EPDM	8010023165	8010023166	8010023167	8010023168	8010023168
57	♦	1	Lip seal, EPDM	9613008706	9613008711	9613008711	9613008711	9613008711
	♦	1	Lip seal, NBR	9613008707	9613008712	9613008712	9613008712	9613008712
	♦	1	Lip seal, FPM	9613008708	9613008713	9613008713	9613008713	9613008713
	♦	1	Lip seal, HNBR	9613008709	9613008714	9613008714	9613008714	9613008714
Lower plug								
38	♦	1	O-ring, EPDM	9611993555	9611993572	9611993572	9611993572	9611993572
		1	O-ring set, (10 pcs.) EPDM	8010023163	8010023164	8010023164	8010023164	8010023164
74	♦	1	Seal ring, EPDM	9613095206	9613095209	9613095219	9613095212	9613095212
	♦	1	Seal ring, NBR	9613095214	9613095215	9613095220	9613095216	9613095216
	♦	1	Seal ring, FPM Alfa Laval recommends EPDM	9613095205	9613095208	9613095218	9613095211	9613095211
	♦	1	Seal ring, HNBR	9613095204	9613095207	9613095217	9613095210	9613095210
		1	Seal ring set, (10 pcs.) EPDM	8010023169	8010023170	8010023171	8010023172	8010023172
75		1	Lower plug	9613016401	9613008301	9613091001	9613017401	9613017403
Lower sealing element								
76	♦	1	O-ring, EPDM	9611993632	9611993636	9611993640	9611993640	9611993644
	♦	1	O-ring, NBR	9611993633	9611993637	9611993641	9611993641	9611993645
	♦	1	O-ring, FPM	9611993634	9611993638	9611993642	9611993642	9611993646
	♦	1	O-ring, HNBR	9611993635	9611993639	9611993643	9611993643	9611993647
77	♦	1	Lip seal, EPDM	9613008501	9613008511	9613008511	9613008511	9613008511
	♦	1	Lip seal, NBR	9613008502	9613008512	9613008512	9613008512	9613008512
	♦	1	Lip seal, FPM	9613008503	9613008513	9613008513	9613008513	9613008513
	♦	1	Lip seal, HNBR	9613008504	9613008514	9613008514	9613008514	9613008514
79		1	Lower sealing element	9613023901	9613024101	9613024301	9613024301	9613024501
80		1	Guide ring, PTFE	9613008416	9613008417	9613008417	9613008417	9613008417
81		1	Cover	9613049002	9613049003	9613049004	9613049004	9613049004
Extra parts if clamped valve body								
52		1	O-ring, EPDM	9611993632	9611993636	9611993640	9611993640	9611993644
		1	O-ring, NBR	9611993633	9611993637	9611993641	9611993641	9611993645
		1	O-ring, FPM	9611993634	9611993638	9611993642	9611993642	9611993646
		1	O-ring, HNBR	9611993635	9611993639	9611993643	9611993643	9611993647

Pos. 37, see section

See note below service kits.

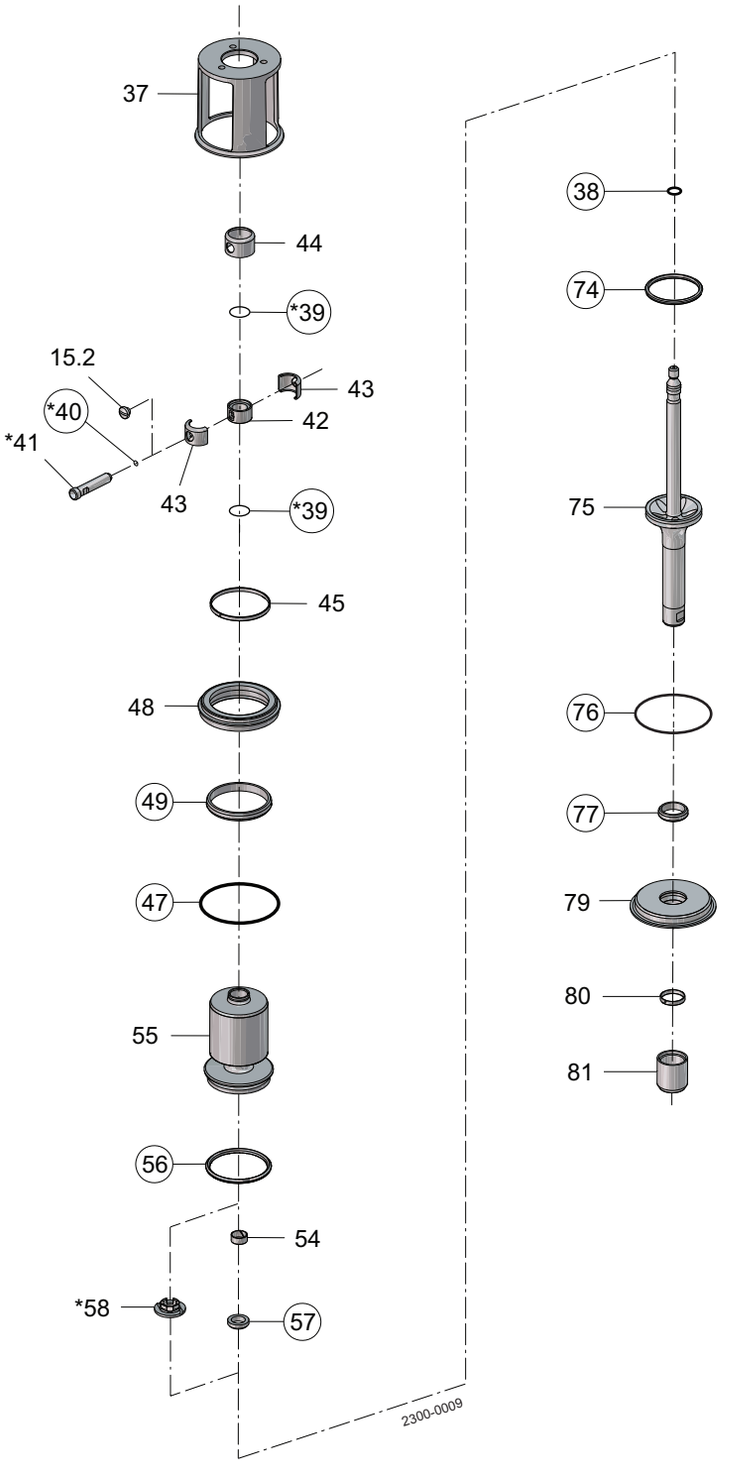

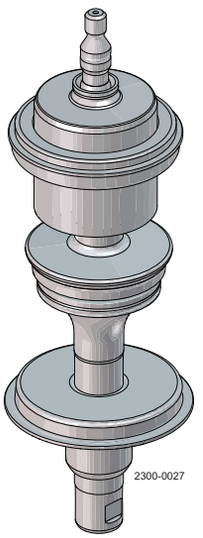

◯ = wear parts

✶ = with SpiralClean in leakage chamber

		DN/OD 51 DN 50 seat ø53.3	DN/OD 63.5 DN/OD 76.1 DN 65/ DN 80 seat ø81.3	#2 DN/OD 101.6 DN 100 seat ø100.3	#1 DN/OD 101.6 DN 100 seat ø115.3	DN 125 DN 150 seat ø115.3
♦	Service kit, EPDM	9611921767	9611921769	9611926366	9611921771	9611926061
♦	Service kit, NBR	9611921773	9611921775	9611926367	9611921777	9611926062
♦	Service kit, FPM	9611921779	9611921781	9611926368	9611921783	9611926063
♦	Service kit, HNBR	9611921785	9611921787	9611926369	9611921789	9611926064

For mixed size housings, the service kit is determined by the smallest size connection on the valve.
One exception is any housing with 6" connections will always refer to the 6" service kits listed below:

♦	Service kit, EPDM	9611926141	9611926205	9611926406	9611926269	
♦	Service kit, NBR	9611926142	9611926206	9611926407	9611926270	
♦	Service kit, FPM	9611926143	9611926207	9611926408	9611926271	
♦	Service kit, HNBR	9611926144	9611926208	9611926409	9611926272	

Parts marked with ♦ are included in the service kit.
#1 = Serial no. below 1030000 - manufactured before October 1st 2003
#2 = Serial no. above 1030000 - manufactured after October 1st 2003

NOTE!
If different connection size on upper and lower body, except for size 6", it is always the smallest body that determines the service kit.
If clamped valve body an extra O-ring (pos. 52) is required.
If SpiralClean in leakage chamber extra O-rings (2x pos. 39 and 1x pos. 40) is required.
Spare parts for mix size please refer to Configurator in AL Anytime

NOTE!
All FPM service kits are supplied with EPDM seal ring, pos. 74.

1.7

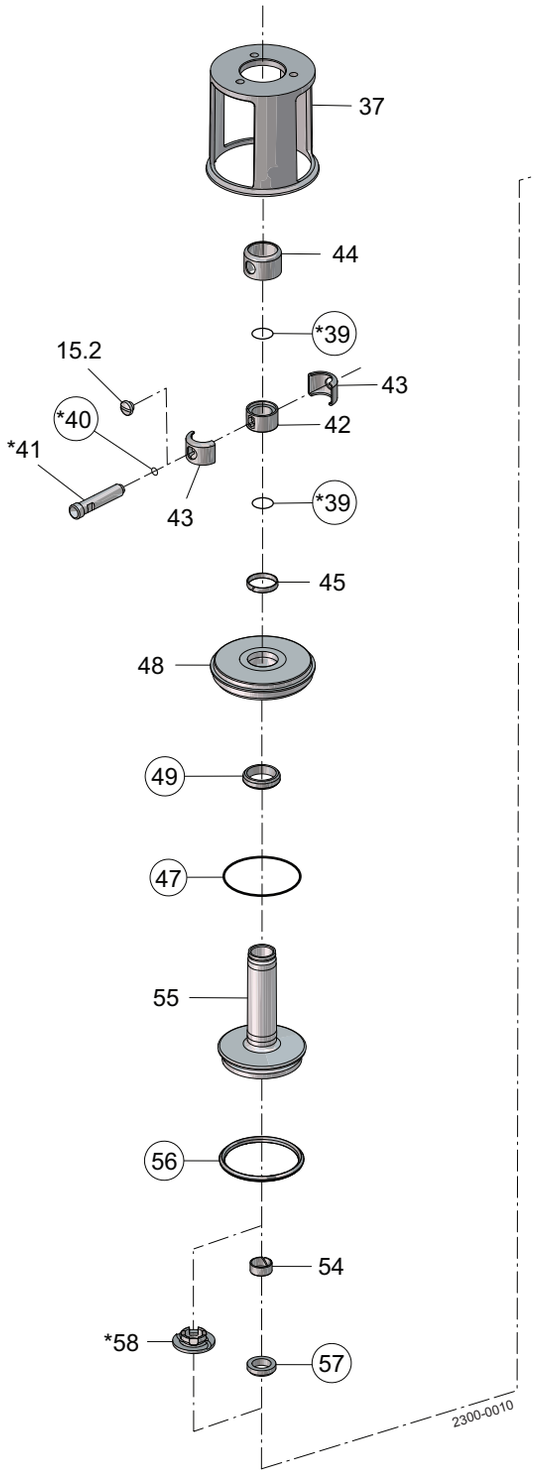

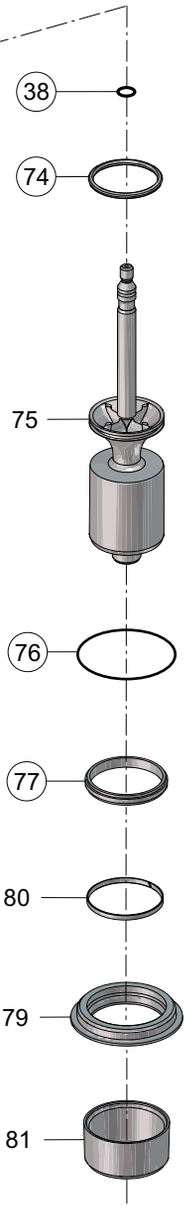

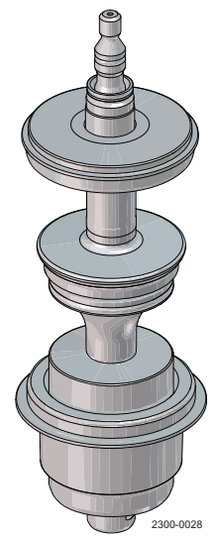

◯ = wear parts
★ = with SpiralClean in leakage chamber

Pos. 37, see section
See note below service kits.

Pos		Qty	Denomination	DN/OD 51 DN 50 Seat ø53.3	DN/OD 63.5 DN/OD 76.1 DN 65/DN 80 Seat ø81.3	#2 DN/OD 101.6 DN 100 Seat ø100.3	#1 DN/OD 101.6 DN 100 Seat ø115.3	DN 125 DN 150 Seat ø115.3
15		1	Plug	9613414101	9613414101	9613414101	9613414101	9613414101
42		1	Spindle liner	9613011601	9613009001	9613009001	9613009001	9613009001
43		2	Clamp	9613011801	9613009201	9613009201	9613009201	9613009201
44		1	Lock	9613011701	9613009101	9613009101	9613009101	9613009101
Extra parts if SpiralClean in vent cavity								
39		2	O-ring, EPDM	9611993492	9611993493	9611993493	9611993493	9611993493
40		1	O-ring, EPDM	9611993119	9611993119	9611993119	9611993119	9611993119
41		1	Flushing tube	3135710172	3135710172	3135710172	3135710172	3135710172
58		1	Spray nozzle, PVDF	9613008801	9613014801	9613014801	9613014801	9613014801
Upper sealing element								
45		1	Guide ring, PTFE	9613008416	9613008417	9613008417	9613008417	9613008417
47	♦	1	O-ring, EPDM	9611993632	9611993636	9611993640	9611993640	9611993644
	♦	1	O-ring, NBR	9611993633	9611993637	9611993641	9611993641	9611993645
	♦	1	O-ring, FPM	9611993634	9611993638	9611993642	9611993642	9611993646
	♦	1	O-ring, HNBR	9611993635	9611993639	9611993643	9611993643	9611993647
48		1	Upper sealing element	9613014201	9613006401	9613018801	9613018801	9613017001
49	♦	1	Lip seal, EPDM	9613008501	9613008511	9613008511	9613008511	9613008511
	♦	1	Lip seal, NBR	9613008502	9613008512	9613008512	9613008512	9613008512
	♦	1	Lip seal, FPM	9613008503	9613008513	9613008513	9613008513	9613008513
	♦	1	Lip seal, HNBR	9613008504	9613008514	9613008514	9613008514	9613008514
Upper plug								
54		1	Guide ring, PTFE	9613008401	9613008402	9613008402	9613008402	9613008402
55		1	Upper plug	9613016201	9613008201	9613091401	9613017201	9613017203
56	♦	1	Seal ring, EPDM	9613095106	9613095109	9613095119	9613095112	9613095112
	♦	1	Seal ring, NBR	9613095114	9613095115	9613095120	9613095116	9613095116
	♦	1	Seal ring, FPM	9613095105	9613095108	9613095118	9613095111	9613095111
	♦	1	Seal ring, HNBR	9613095104	9613095107	9613095117	9613095110	9613095110
		1	Seal ring set, (10 pcs.) EPDM	8010023165	8010023166	8010023167	8010023168	8010023168
57	♦	1	Lip seal, EPDM	9613008706	9613008711	9613008711	9613008711	9613008711
	♦	1	Lip seal, NBR	9613008707	9613008712	9613008712	9613008712	9613008712
	♦	1	Lip seal, FPM	9613008708	9613008713	9613008713	9613008713	9613008713
	♦	1	Lip seal, HNBR	9613008709	9613008714	9613008714	9613008714	9613008714
Lower plug								
38	♦	1	O-ring, EPDM	9611993555	9611993572	9611993572	9611993572	9611993572
		1	O-ring set, (10 pcs.) EPDM	8010023163	8010023164	8010023164	8010023164	8010023164
74	♦	1	Seal ring, EPDM	9613095206	9613095209	9613095219	9613095212	9613095212
	♦	1	Seal ring, NBR	9613095214	9613095215	9613095220	9613095216	9613095216
	♦	1	Seal ring, FPM Alfa Laval recommends EPDM	9613095205	9613095208	9613095218	9613095211	9613095211
	♦	1	Seal ring, HNBR	9613095204	9613095207	9613095217	9613095210	9613095210
		1	Seal ring set, (10 pcs.) EPDM	8010023169	8010023170	8010023171	8010023172	8010023172
75		1	Lower plug	9613016501	9613009401	9613091101	9613017501	9613017503
Lower sealing element								
76	♦	1	O-ring, EPDM	9611993632	9611993636	9611993640	9611993640	9611993644
	♦	1	O-ring, NBR	9611993633	9611993637	9611993641	9611993641	9611993645
	♦	1	O-ring, FPM	9611993634	9611993638	9611993642	9611993642	9611993646
	♦	1	O-ring, HNBR	9611993635	9611993639	9611993643	9611993643	9611993647
77	♦	1	Lip seal, EPDM	9613008521	9613008526	9613008548	9613008531	9613008531
	♦	1	Lip seal, NBR	9613008522	9613008527	9613008549	9613008532	9613008532
	♦	1	Lip seal, FPM	9613008523	9613008528	9613008550	9613008533	9613008533
	♦	1	Lip seal, HNBR	9613008524	9613008529	9613008551	9613008534	9613008534
79		1	Lower sealing element	9613023902	9613024102	9613066201	9613024302	9613024502
80		1	Guide ring, PTFE	9613008413	9613008414	9613008420	9613008415	9613008415
81		1	Cover	9613049005	9613049006	9613049015	9613049007	9613049007
Extra parts if clamped valve body								
52		1	O-ring, EPDM	9611993632	9611993636	9611993640	9611993640	9611993644
		1	O-ring, NBR	9611993633	9611993637	9611993641	9611993641	9611993645
		1	O-ring, FPM	9611993634	9611993638	9611993642	9611993642	9611993646
		1	O-ring, HNBR	9611993635	9611993639	9611993643	9611993643	9611993647

Pos. 37, see section

See note below service kits.

1.7

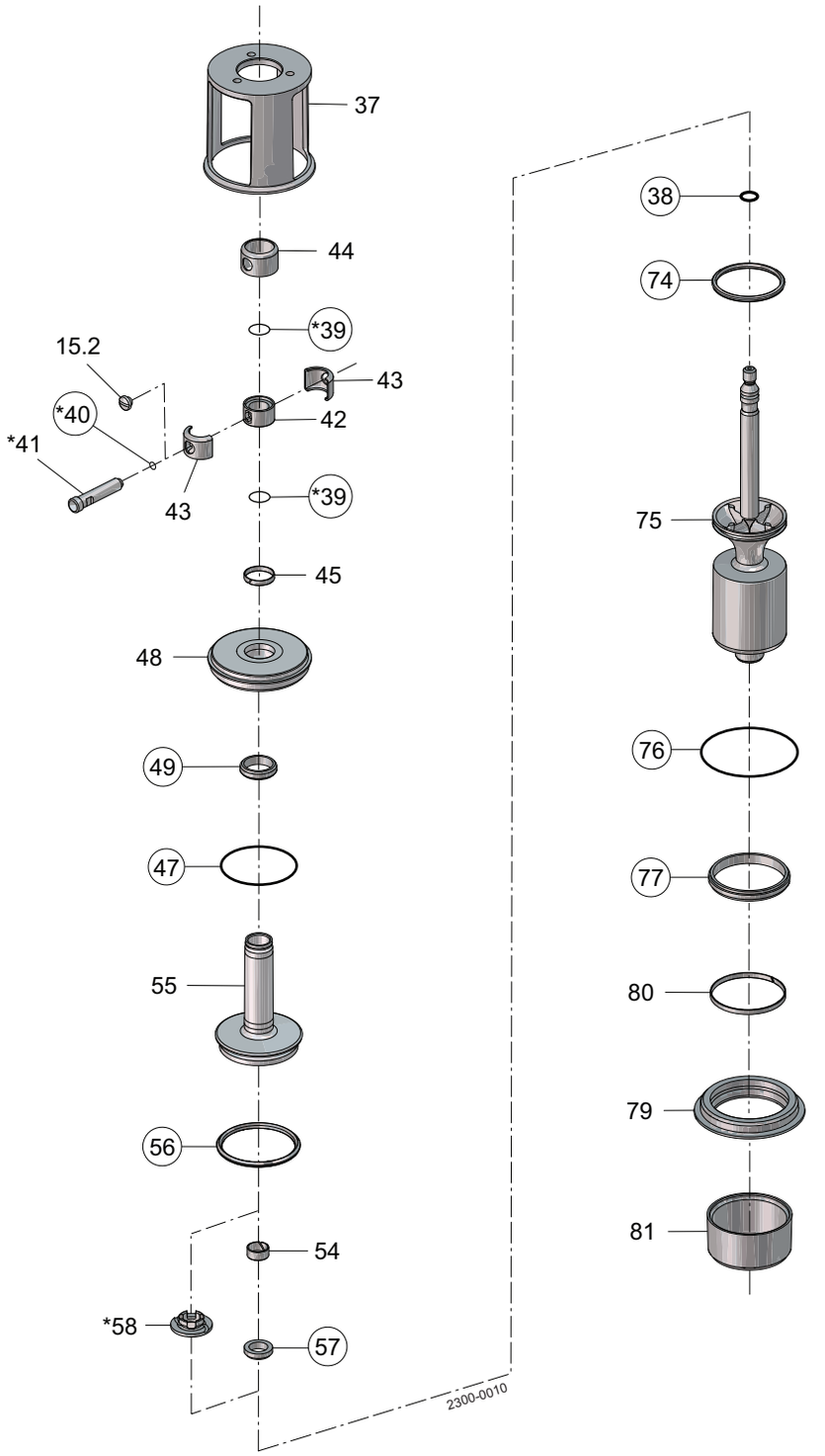

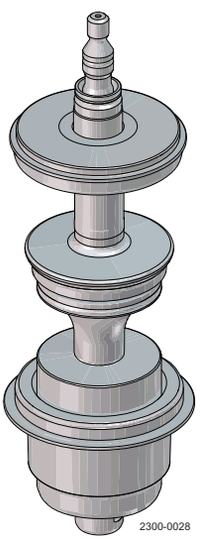

◯ = wear parts

✶ = with SpiralClean in leakage chamber

		DN/OD 51 DN 50 Seat ø53.3	DN/OD 63.5 DN/OD 76.1 DN 65/DN 80 Seat ø81.3	#2 DN/OD 101.6 DN 100 Seat ø100.3	#1 DN/OD 101.6 DN 100 Seat ø115.3	DN 125 DN 150 Seat ø115.3
♦	Service kit, EPDM	9611921767	9611921769	9611926366	9611921771	9611926061
♦	Service kit, NBR	9611921773	9611921775	9611926367	9611921777	9611926062
♦	Service kit, FPM	9611921779	9611921781	9611926368	9611921783	9611926063
♦	Service kit, HNBR	9611921785	9611921787	9611926369	9611921789	9611926064

For mixed size housings, the service kit is determined by the smallest size connection on the valve.
One exception is any housing with 6" connections will always refer to the 6" service kits listed below:

♦	Service kit, EPDM	9611926141	9611926205	9611926406	9611926269	
♦	Service kit, NBR	9611926142	9611926206	9611926407	9611926270	
♦	Service kit, FPM	9611926143	9611926207	9611926408	9611926271	
♦	Service kit, HNBR	9611926144	9611926208	9611926409	9611926272	

Parts marked with ♦ are included in the service kit.
#1 = Serial no. below 1030000 - manufactured before October 1st 2003
#2 = Serial no. above 1030000 - manufactured after October 1st 2003

NOTE!
If different connection size on upper and lower body, except for size 6", it is always the smallest body that determines the service kit.
If clamped valve body an extra O-ring (pos. 52) is required.
If SpiralClean in leakage chamber extra O-rings (2x pos. 39 and 1x pos. 40) is required.
Spare parts for mix size please refer to Configurator in AL Anytime

NOTE!
All FPM service kits are supplied with EPDM seal ring, pos. 74.

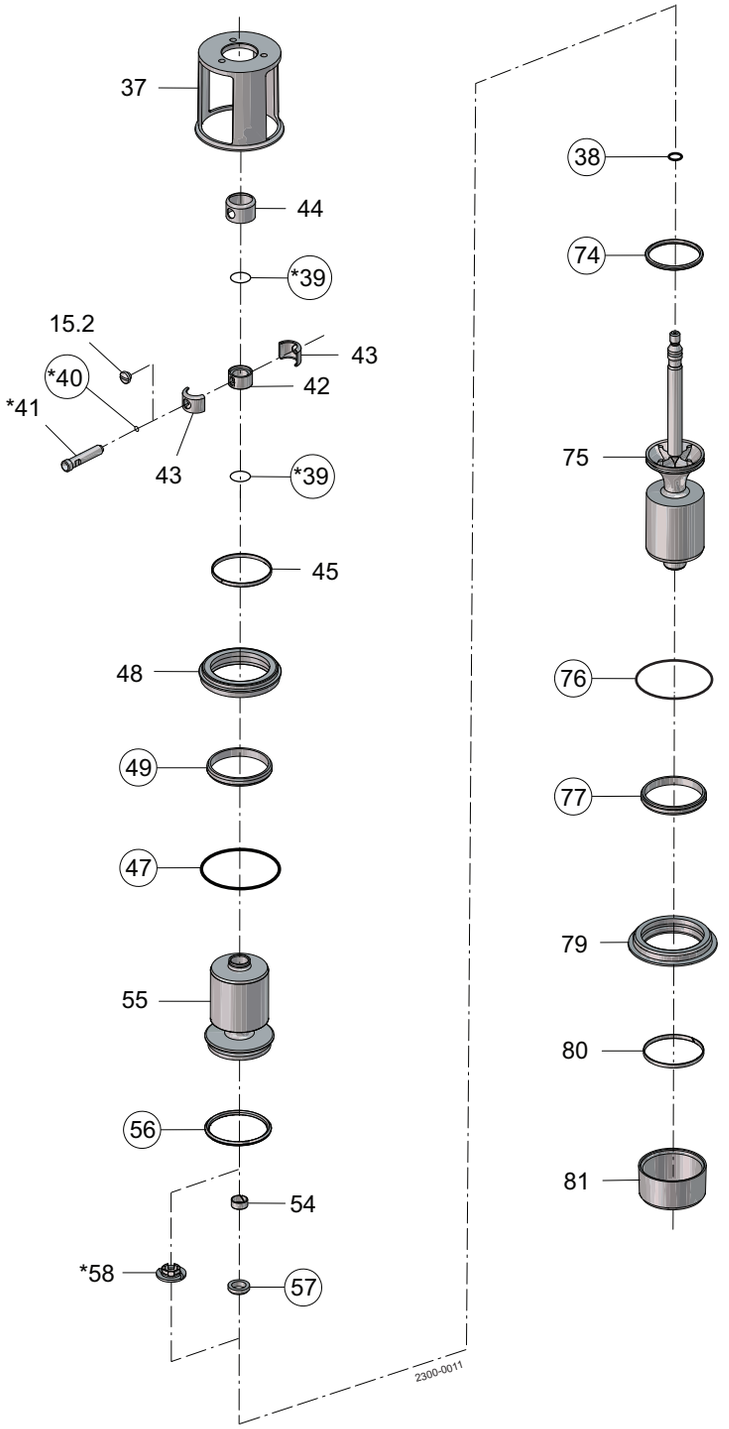

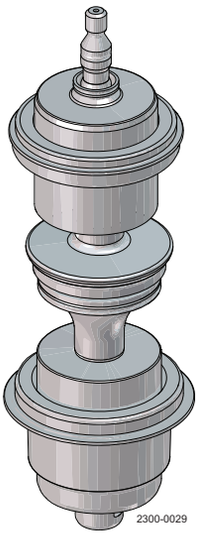

◯ = wear parts
✶ = with SpiralClean in leakage chamber

Pos. 37, see section
See note below service kits.

Pos		Qty	Denomination	DN/OD 38 DN 40 Seat ø53.3	DN/OD 51 DN 50 Seat ø53.3	DN/OD 63.5 DN/OD 76.1 DN 65/DN 80 Seat ø81.3	#2 DN/OD 101.6 DN 100 Seat ø100.3	#1 DN/OD 101.6 DN 100 Seat ø115.3	DN 125 DN 150 Seat ø115.3
Spindle liner									
15		1	Plug	9613414101	9613414101	9613414101	9613414101	9613414101	9613414101
42		1	Spindle liner	9613011601	9613011601	9613009001	9613009001	9613009001	9613009001
43		2	Clamp	9613011801	9613011801	9613009201	9613009201	9613009201	9613009201
44		1	Lock	9613011701	9613011701	9613009101	9613009101	9613009101	9613009101
Extra parts if SpiralClean in vent cavity									
39		2	O-ring, EPDM	9611993492	9611993492	9611993493	9611993493	9611993493	9611993493
40		1	O-ring, EPDM	9611993119	9611993119	9611993119	9611993119	9611993119	9611993119
41		1	Flushing tube	3135710172	3135710172	3135710172	3135710172	3135710172	3135710172
58		1	Spray nozzle, PVDF	9613008801	9613008801	9613014801	9613014801	9613014801	9613014801
Upper sealing element									
45		1	Guide ring, PTFE	9613008412	9613008413	9613008414	9613008420	9613008415	9613008415
47	♦	1	O-ring, EPDM	9611993628	9611993632	9611993636	9611993640	9611993640	9611993644
	♦	1	O-ring, NBR	9611993629	9611993633	9611993637	9611993641	9611993641	9611993645
	♦	1	O-ring, FPM	9611993630	9611993634	9611993638	9611993642	9611993642	9611993646
	♦	1	O-ring, HNBR	9611993631	9611993635	9611993639	9611993643	9611993643	9611993647
48		1	Upper sealing element	9613015701	9613014202	9613006402	9613066001	9613018802	9613017002
49	♦	1	Lip seal, EPDM	9613008516	9613008521	9613008526	9613008548	9613008531	9613008531
	♦	1	Lip seal, NBR	9613008517	9613008522	9613008527	9613008549	9613008532	9613008532
	♦	1	Lip seal, FPM	9613008518	9613008523	9613008528	9613008550	9613008533	9613008533
	♦	1	Lip seal, HNBR	9613008519	9613008524	9613008529	9613008551	9613008534	9613008534
Upper plug									
54		1	Guide ring, PTFE	9613008401	9613008401	9613008402	9613008402	9613008402	9613008402
55		1	Upper plug	9613014401	9613016301	9613009301	9613091501	9613017301	9613017303
56	♦	1	Seal ring, EPDM	9613095106	9613095106	9613095109	9613095119	9613095112	9613095112
	♦	1	Seal ring, NBR	9613095114	9613095114	9613095115	9613095120	9613095116	9613095116
	♦	1	Seal ring, FPM	9613095105	9613095105	9613095108	9613095118	9613095111	9613095111
	♦	1	Seal ring, HNBR	9613095104	9613095104	9613095107	9613095117	9613095110	9613095110
		1	Seal ring set, (10 pcs.) EPDM	8010023165	8010023165	8010023166	8010023167	8010023168	8010023168
57	♦	1	Lip seal, EPDM	9613008706	9613008706	9613008711	9613008711	9613008711	9613008711
	♦	1	Lip seal, NBR	9613008707	9613008707	9613008712	9613008712	9613008712	9613008712
	♦	1	Lip seal, FPM	9613008708	9613008708	9613008713	9613008713	9613008713	9613008713
	♦	1	Lip seal, HNBR	9613008709	9613008709	9613008714	9613008714	9613008714	9613008714
Lower plug									
38	♦	1	O-ring, EPDM	9611993555	9611993555	9611993572	9611993572	9611993572	9611993572
		1	O-ring set, (10 pcs.) EPDM	8010023163	8010023163	8010023164	8010023164	8010023164	8010023164
74	♦	1	Seal ring, EPDM	9613095206	9613095206	9613095209	9613095219	9613095212	9613095212
	♦	1	Seal ring, NBR	9613095214	9613095214	9613095215	9613095220	9613095216	9613095216
	♦	1	Seal ring, FPM Alfa Laval recommends EPDM	9613095205	9613095205	9613095208	9613095218	9613095211	9613095211
	♦	1	Seal ring, HNBR	9613095204	9613095204	9613095207	9613095217	9613095210	9613095210
		1	Seal ring set, (10 pcs.) EPDM	8010023169	8010023169	8010023170	8010023171	8010023172	8010023172
75		1	Lower plug	9613014601	9613016501	9613009401	9613091101	9613017501	9613017503
Lower sealing element									
76	♦	1	O-ring, EPDM	9611993628	9611993632	9611993636	9611993640	9611993640	9611993644
	♦	1	O-ring, NBR	9611993629	9611993633	9611993637	9611993641	9611993641	9611993645
	♦	1	O-ring, FPM	9611993630	9611993634	9611993638	9611993642	9611993642	9611993646
	♦	1	O-ring, HNBR	9611993631	9611993635	9611993639	9611993643	9611993643	9611993647
77	♦	1	Lip seal, EPDM	9613008516	9613008521	9613008526	9613008548	9613008531	9613008531
	♦	1	Lip seal, NBR	9613008517	9613008522	9613008527	9613008549	9613008532	9613008532
	♦	1	Lip seal, FPM	9613008518	9613008523	9613008528	9613008550	9613008533	9613008533
	♦	1	Lip seal, HNBR	9613008519	9613008524	9613008529	9613008551	9613008534	9613008534
79		1	Lower sealing element	9613023701	9613023902	9613024102	9613066201	9613024302	9613024502
80		1	Guide ring, PTFE	9613008412	9613008413	9613008414	9613008420	9613008415	9613008415
81		1	Cover	9613049001	9613049005	9613049006	9613049015	9613049007	9613049007
Extra parts if clamped valve body									
52		1	O-ring, EPDM	9611993628	9611993632	9611993636	9611993640	9611993640	9611993644
		1	O-ring, NBR	9611993629	9611993633	9611993637	9611993641	9611993641	9611993645
		1	O-ring, FPM	9611993630	9611993634	9611993638	9611993642	9611993642	9611993646
		1	O-ring, HNBR	9611993631	9611993635	9611993639	9611993643	9611993643	9611993647

Pos. 37, see section

See note below service kits.

1.7

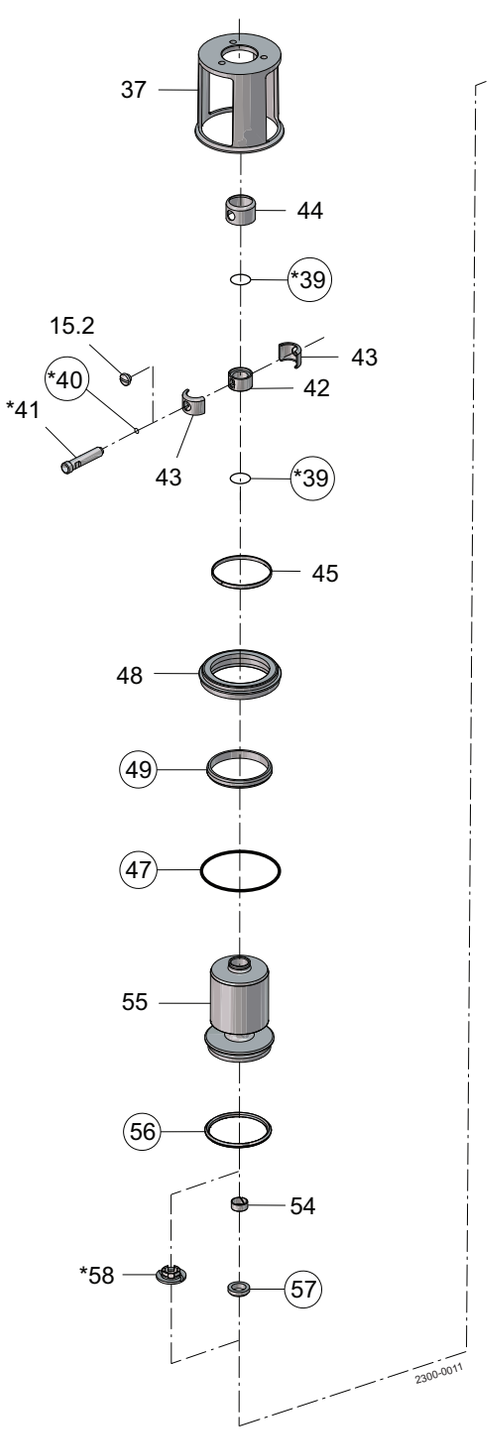

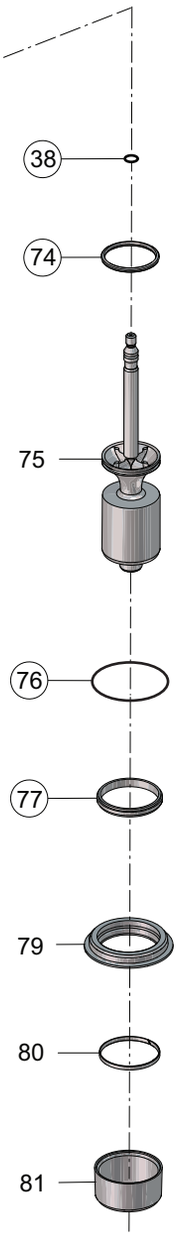

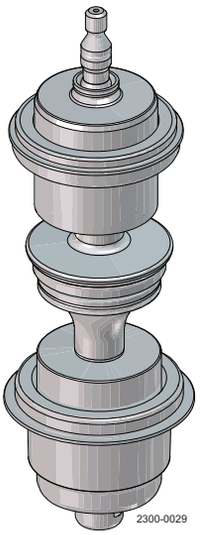

◯ = wear parts

✶ = with SpiralClean in leakage chamber

		DN/OD 38 DN 40 Seat ø53.3	DN/OD 51 DN 50 Seat ø53.3	DN/OD 63.5 DN/OD 76.1 DN 65/DN 80 Seat ø81.3	#2 DN/OD 101.6 DN 100 Seat ø100.3	#1 DN/OD 101.6 DN 100 Seat ø115.3	DN 125 DN 150 Seat ø115.3
♦	Service kit, EPDM	9611921814	9611921815	9611921816	9611926370	9611921818	9611926069
♦	Service kit, NBR	9611921820	9611921821	9611921822	9611926371	9611921824	9611926070
♦	Service kit, FPM	9611921826	9611921827	9611921828	9611926372	9611921830	9611926071
♦	Service kit, HNBR	9611921832	9611921833	9611921834	9611926373	9611921836	9611926072

For mixed size housings, the service kit is determined by the smallest size connection on the valve.
One exception is any housing with 6” connections will always refer to the 6” service kits listed below:

♦	Service kit, EPDM	9611926097	9611926149	9611926213	9611926410	9611926277	
♦	Service kit, NBR	9611926098	9611926150	9611926214	9611926411	9611926278	
♦	Service kit, FPM	9611926099	9611926151	9611926215	9611926412	9611926279	
♦	Service kit, HNBR	9611926100	9611926152	9611926216	9611926413	9611926280	

Parts marked with ♦ are included in the service kits.
#1 = Serial no. below 1030000 - manufactured before October 1st 2003
#2 = Serial no. above 1030000 - manufactured after October 1st 2003

NOTE!
If different connection size on upper and lower body, except for size 6", it is always the smallest body that determines the service kit.
If clamped valve body an extra O-ring (pos. 52) is required.
If SpiralClean in leakage chamber extra O-rings (2x pos. 39 and 1x pos. 40) is required.
Spare parts for mix size please refer to Configurator in AL Anytime

NOTE!
All FPM service kits are supplied with EPDM seal ring, pos. 74.

1.7

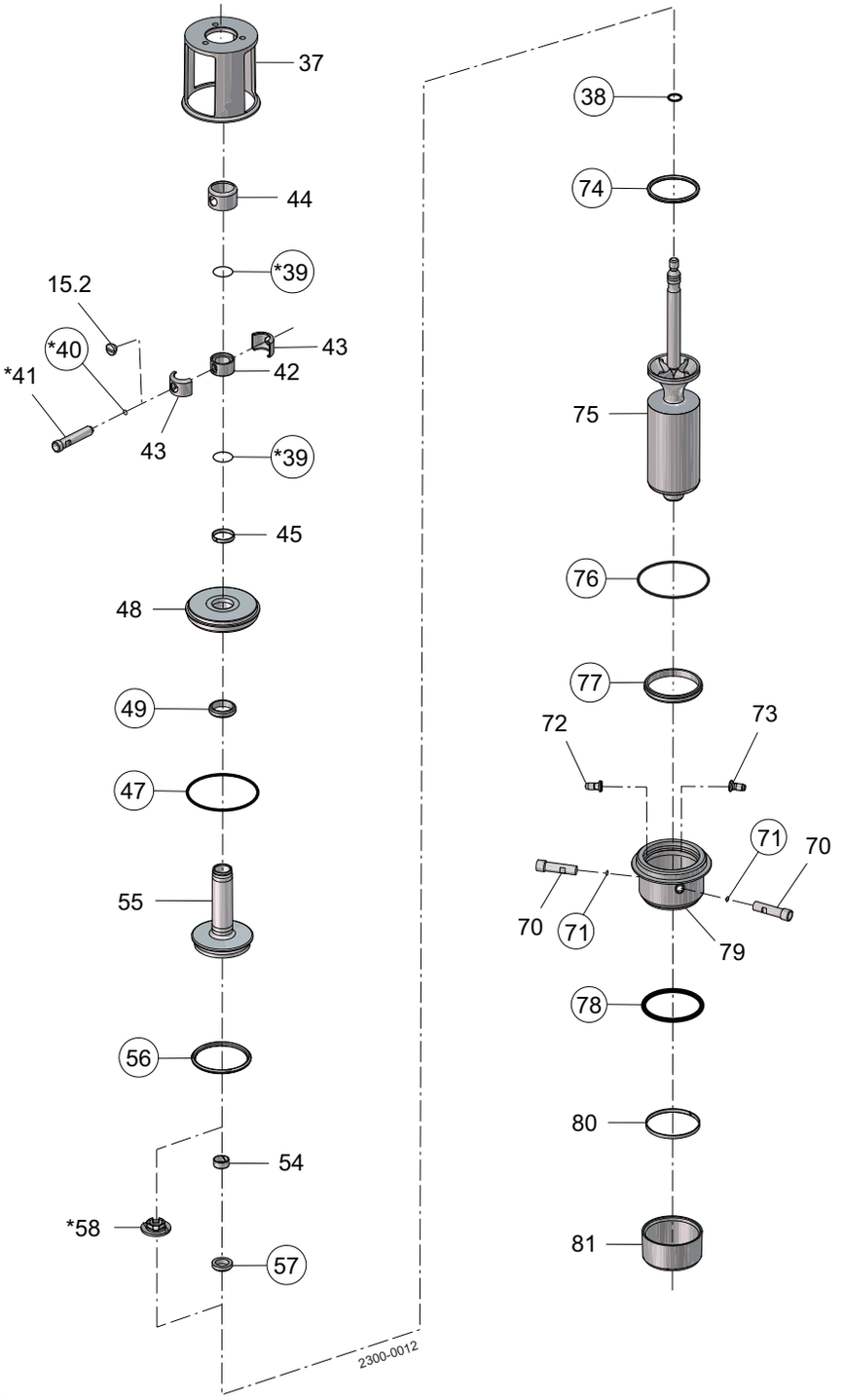

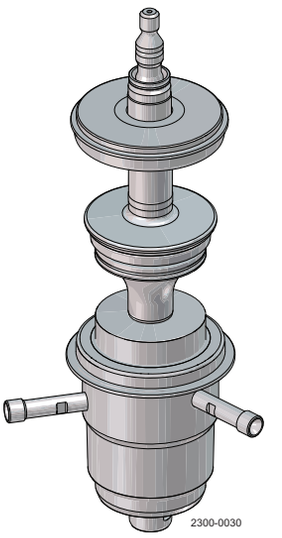

◯ = wear parts
✶ = with SpiralClean in leakage chamber

Pos. 37, see section
See note below service kits.

Pos		Qty	Denomination	DN/OD 51 DN 50 Seat ø53.3	DN/OD 63.5 DN/OD 76.1 DN 65/DN 80 Seat ø81.3	#2 DN/OD 101.6 DN 100 Seat ø100.3	#1 DN/OD 101.6 DN 100 Seat ø115.3	DN 125 DN 150 Seat ø115.3
Spindle liner								
15		1	Plug	9613414101	9613414101	9613414101	9613414101	9613414101
42		1	Spindle liner	9613011601	9613009001	9613009001	9613009001	9613009001
43		2	Clamp	9613011801	9613009201	9613009201	9613009201	9613009201
44		1	Lock	9613011701	9613009101	9613009101	9613009101	9613009101
Extra parts if SpiralClean in vent cavity								
39		2	O-ring, EPDM	9611993492	9611993493	9611993493	9611993493	9611993493
40		1	O-ring, EPDM	9611993119	9611993119	9611993119	9611993119	9611993119
41		1	Flushing tube	3135710172	3135710172	3135710172	3135710172	3135710172
58		1	Spray nozzle, PVDF	9613008801	9613014801	9613014801	9613014801	9613014801
Upper sealing element								
45		1	Guide ring, PTFE	9613008416	9613008417	9613008417	9613008417	9613008417
47	♦	1	O-ring, EPDM	9611993632	9611993636	9611993640	9611993640	9611993644
	♦	1	O-ring, NBR	9611993633	9611993637	9611993641	9611993641	9611993645
	♦	1	O-ring, FPM	9611993634	9611993638	9611993642	9611993642	9611993646
	♦	1	O-ring, HNBR	9611993635	9611993639	9611993643	9611993643	9611993647
48		1	Upper sealing element	9613014201	9613006401	9613018801	9613018801	9613017001
49	♦	1	Lip seal, EPDM	9613008501	9613008511	9613008511	9613008511	9613008511
	♦	1	Lip seal, NBR	9613008502	9613008512	9613008512	9613008512	9613008512
	♦	1	Lip seal, FPM	9613008503	9613008513	9613008513	9613008513	9613008513
	♦	1	Lip seal, HNBR	9613008504	9613008514	9613008514	9613008514	9613008514
Upper plug								
54		1	Guide ring, PTFE	9613008401	9613008402	9613008402	9613008402	9613008402
55		1	Upper plug	9613016201	9613008201	9613091401	9613017201	9613017203
56	♦	1	Seal ring, EPDM	9613095106	9613095109	9613095119	9613095112	9613095112
	♦	1	Seal ring, NBR	9613095114	9613095115	9613095120	9613095116	9613095116
	♦	1	Seal ring, FPM	9613095105	9613095108	9613095118	9613095111	9613095111
	♦	1	Seal ring, HNBR	9613095104	9613095107	9613095117	9613095110	9613095110
		1	Seal ring set, (10 pcs.) EPDM	8010023165	8010023166	8010023167	8010023168	8010023168
57	♦	1	Lip seal, EPDM	9613008706	9613008711	9613008711	9613008711	9613008711
	♦	1	Lip seal, NBR	9613008707	9613008712	9613008712	9613008712	9613008712
	♦	1	Lip seal, FPM	9613008708	9613008713	9613008713	9613008713	9613008713
	♦	1	Lip seal, HNBR	9613008709	9613008714	9613008714	9613008714	9613008714
Lower plug								
38	♦	1	O-ring, EPDM	9611993555	9611993572	9611993572	9611993572	9611993572
		1	O-ring set, (10 pcs.) EPDM	8010023163	8010023164	8010023164	8010023164	8010023164
74	♦	1	Seal ring, EPDM	9613095206	9613095209	9613095219	9613095212	9613095212
	♦	1	Seal ring, NBR	9613095214	9613095215	9613095220	9613095216	9613095216
	♦	1	Seal ring, FPM Alfa Laval recommends EPDM	9613095205	9613095208	9613095218	9613095211	9613095211
	♦	1	Seal ring, HNBR	9613095204	9613095207	9613095217	9613095210	9613095210
		1	Seal ring set, (10 pcs.) EPDM	8010023169	8010023170	8010023171	8010023172	8010023172
75		1	Lower plug	9613016502	9613009402	9613091102	9613017502	9613017504
Lower sealing element								
70		2	Flushing tube	9613007902	9613007903	9613007904	9613007904	9613007905
71		2	O-ring, EPDM	9611993119	9611993119	9611993119	9611993119	9611993119
72		1	Drain	9613008001	9613008001	9613008001	9613008001	9613008001
73		1	Nozzle	9613008002	9613008002	9613008002	9613008002	9613008002
76	♦	1	O-ring, EPDM	9611993632	9611993636	9611993640	9611993640	9611993644
	♦	1	O-ring, NBR	9611993633	9611993637	9611993641	9611993641	9611993645
	♦	1	O-ring, FPM	9611993634	9611993638	9611993642	9611993642	9611993646
	♦	1	O-ring, HNBR	9611993635	9611993639	9611993643	9611993643	9611993647
77	♦	1	Lip seal, EPDM	9613008521	9613008526	9613008548	9613008531	9613008531
	♦	1	Lip seal, NBR	9613008522	9613008527	9613008549	9613008532	9613008532
	♦	1	Lip seal, FPM	9613008523	9613008528	9613008550	9613008533	9613008533
	♦	1	Lip seal, HNBR	9613008524	9613008529	9613008551	9613008534	9613008534
78	♦	1	O-ring, EPDM	9611993650	9611993651	9611994407	9611993652	9611993652
79		1	Lower sealing element	9613049501	9613049601	9613066101	9613049701	9613049801
80		1	Guide ring, PTFE	9613008413	9613008414	9613008420	9613008415	9613008415
81		1	Cover	9613049005	9613049006	9613049015	9613049007	9613049007
Extra parts if clamped valve body								
52		1	O-ring, EPDM	9611993632	9611993636	9611993640	9611993640	9611993644
		1	O-ring, NBR	9611993633	9611993637	9611993641	9611993641	9611993645
		1	O-ring, FPM	9611993634	9611993638	9611993642	9611993642	9611993646
		1	O-ring, HNBR	9611993635	9611993639	9611993643	9611993643	9611993647

Pos. 37, see section

See note below service kits.

1.7

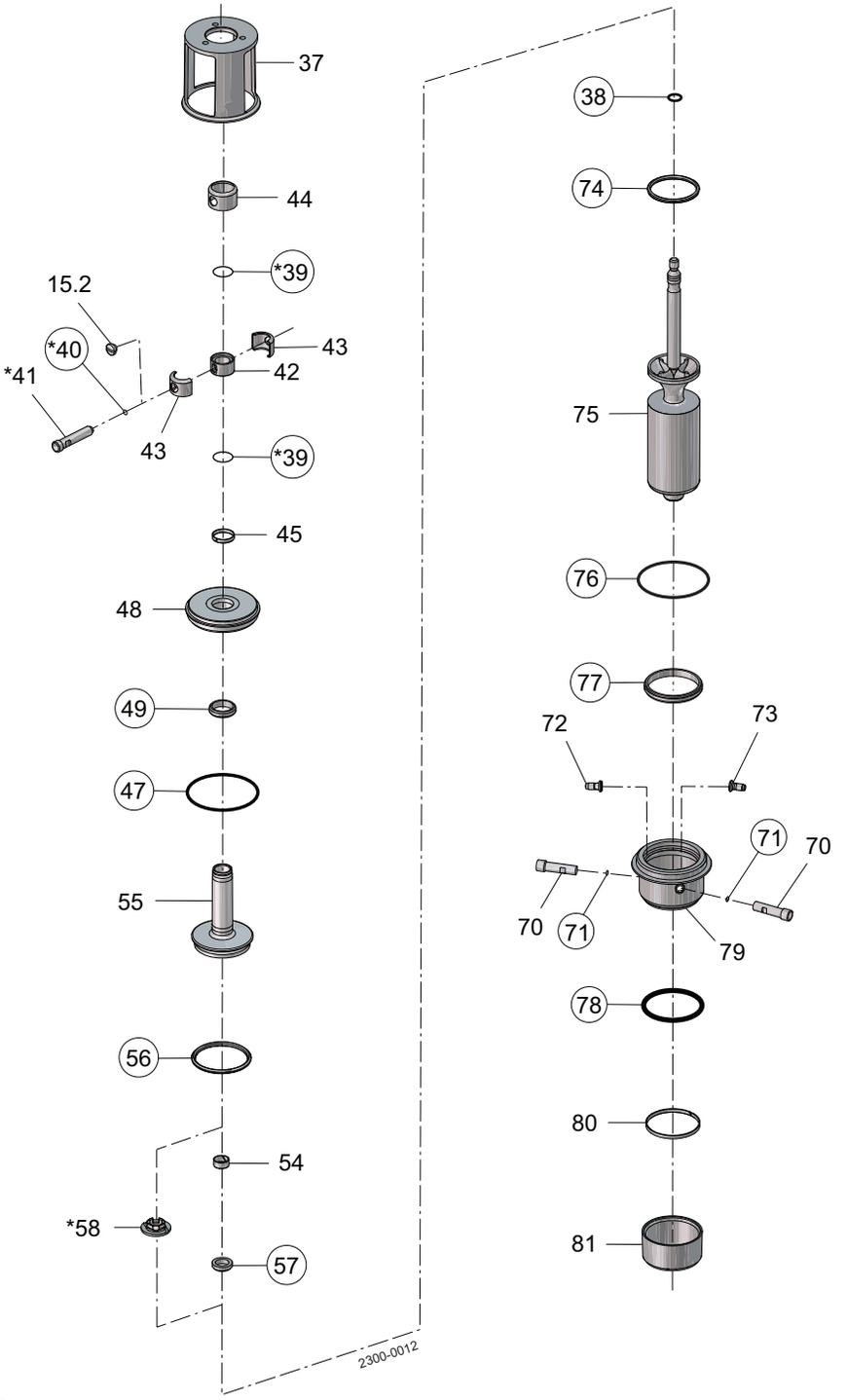

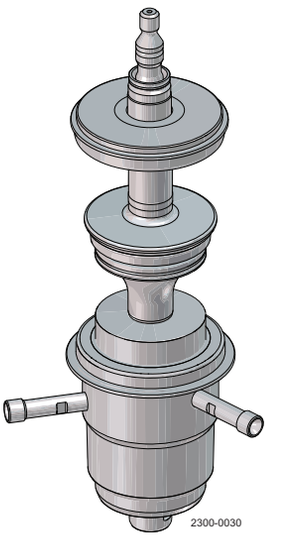

◯ = wear parts

✶ = with SpiralClean in leakage chamber

		DN/OD 51 DN 50 Seat ø53.3	DN/OD 63.5 DN/OD 76.1 DN 65/DN 80 Seat ø81.3	#2 DN/OD 101.6 DN 100 Seat ø100.3	#1 DN/OD 101.6 DN 100 Seat ø115.3	DN 125 DN 150 Seat ø115.3
♦	Service kit, EPDM	9611921574	9611921576	9611926338	9611921578	9611926029
♦	Service kit, NBR	9611921580	9611921582	9611926339	9611921584	9611926030
♦	Service kit, FPM	9611921586	9611921588	9611926340	9611921590	9611926031
♦	Service kit, HNBR	9611921592	9611921594	9611926341	9611921596	9611926032

1.7

For mixed size housings, the service kit is determined by the smallest size connection on the valve.
One exception is any housing with 6" connections will always refer to the 6" service kits listed below:

♦	Service kit, EPDM	9611926109	9611926173	9611926378	9611926237
♦	Service kit, NBR	9611926110	9611926174	9611926379	9611926238
♦	Service kit, FPM	9611926111	9611926175	9611926380	9611926239
♦	Service kit, HNBR	9611926112	9611926176	9611926381	9611926240

Parts marked with ♦ are included in the service kit.
#1 = Serial no. below 1030000 - manufactured before October 1st 2003
#2 = Serial no. above 1030000 - manufactured after October 1st 2003

NOTE!
If different connection size on upper and lower body, except for size 6", it is always the smallest body that determines the service kit.
If clamped valve body an extra O-ring (pos. 52) is required.
If SpiralClean in leakage chamber extra O-rings (2x pos. 39 and 1x pos. 40) is required.
Spare parts for mix size please refer to Configurator in AL Anytime

NOTE!
All FPM service kits are supplied with EPDM seal ring, pos. 74.

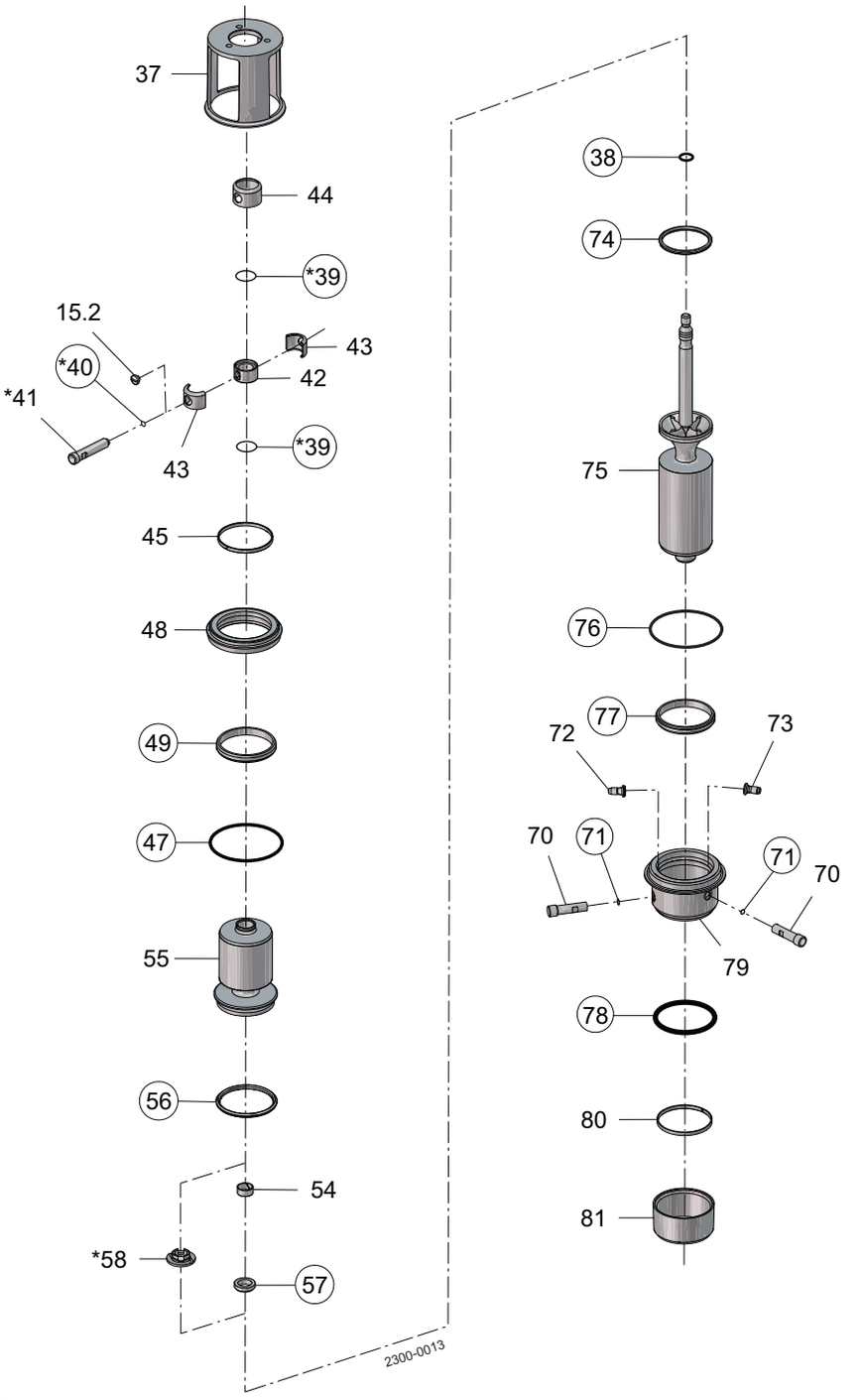

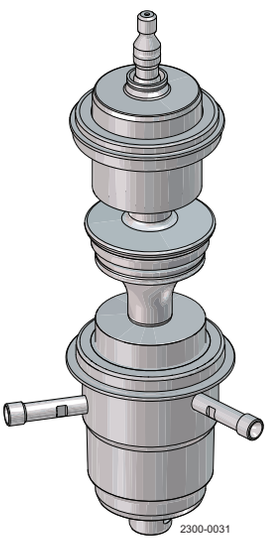

◯ = wear parts
✶ = with SpiralClean in leakage chamber

Pos. 37, see section
See note below service kits.

Pos		Qty	Denomination	DN/OD 38 DN 40 Seat ø53.3	DN/OD 51 DN 50 Seat ø53.3	DN/OD 63.5 DN/OD 76.1 DN 65/DN 80 Seat ø81.3	#2 DN/OD 101.6 DN 100 Seat ø100.3	#1 DN/OD 101.6 DN 100 Seat ø115.3	DN 125 DN 150 Seat ø115.3
Spindle liner									
15		1	Plug	9613414101	9613414101	9613414101	9613414101	9613414101	9613414101
42		1	Spindle liner	9613011601	9613011601	9613009001	9613009001	9613009001	9613009001
43		2	Clamp	9613011801	9613011801	9613009201	9613009201	9613009201	9613009201
44		1	Lock	9613011701	9613011701	9613009101	9613009101	9613009101	9613009101
Extra parts if SpiralClean in vent cavity									
39		2	O-ring, EPDM	9611993492	9611993492	9611993493	9611993493	9611993493	9611993493
40		1	O-ring, EPDM	9611993119	9611993119	9611993119	9611993119	9611993119	9611993119
41		1	Flushing tube	3135710172	3135710172	3135710172	3135710172	3135710172	3135710172
58		1	Spray nozzle, PVDF	9613008801	9613008801	9613014801	9613014801	9613014801	9613014801
Upper sealing element									
45		1	Guide ring, PTFE	9613008412	9613008413	9613008414	9613008420	9613008415	9613008415
47	♦	1	O-ring, EPDM	9611993628	9611993632	9611993636	9611993640	9611993640	9611993644
	♦	1	O-ring, NBR	9611993629	9611993633	9611993637	9611993641	9611993641	9611993645
	♦	1	O-ring, FPM	9611993630	9611993634	9611993638	9611993642	9611993642	9611993646
	♦	1	O-ring, HNBR	9611993631	9611993635	9611993639	9611993643	9611993643	9611993647
48		1	Upper sealing element	9613015701	9613014202	9613006402	9613066001	9613018802	9613017002
49	♦	1	Lip seal, EPDM	9613008516	9613008521	9613008526	9613008548	9613008531	9613008531
	♦	1	Lip seal, NBR	9613008517	9613008522	9613008527	9613008549	9613008532	9613008532
	♦	1	Lip seal, FPM	9613008518	9613008523	9613008528	9613008550	9613008533	9613008533
	♦	1	Lip seal, HNBR	9613008519	9613008524	9613008529	9613008551	9613008534	9613008534
Upper plug									
54		1	Guide ring, PTFE	9613008401	9613008401	9613008402	9613008402	9613008402	9613008402
55		1	Upper plug	9613014401	9613016301	9613009301	9613091501	9613017301	9613017303
56	♦	1	Seal ring, EPDM	9613095106	9613095106	9613095109	9613095119	9613095112	9613095112
	♦	1	Seal ring, NBR	9613095114	9613095114	9613095115	9613095120	9613095116	9613095116
	♦	1	Seal ring, FPM	9613095105	9613095105	9613095108	9613095118	9613095111	9613095111
	♦	1	Seal ring, HNBR	9613095104	9613095104	9613095107	9613095117	9613095110	9613095110
		1	Seal ring set, (10 pcs.) EPDM	8010023165	8010023165	8010023166	8010023167	8010023168	8010023168
57	♦	1	Lip seal, EPDM	9613008706	9613008706	9613008711	9613008711	9613008711	9613008711
	♦	1	Lip seal, NBR	9613008707	9613008707	9613008712	9613008712	9613008712	9613008712
	♦	1	Lip seal, FPM	9613008708	9613008708	9613008713	9613008713	9613008713	9613008713
	♦	1	Lip seal, HNBR	9613008709	9613008709	9613008714	9613008714	9613008714	9613008714
Lower plug									
38	♦	1	O-ring, EPDM	9611993555	9611993555	9611993572	9611993572	9611993572	9611993572
		1	O-ring set, (10 pcs.) EPDM	8010023163	8010023163	8010023164	8010023164	8010023164	8010023164
74	♦	1	Seal ring, EPDM	9613095206	9613095206	9613095209	9613095219	9613095212	9613095212
	♦	1	Seal ring, NBR	9613095214	9613095214	9613095215	9613095220	9613095216	9613095216
	♦	1	Seal ring, FPM Alfa Laval recommends EPDM	9613095205	9613095205	9613095208	9613095218	9613095211	9613095211
	♦	1	Seal ring, HNBR	9613095204	9613095204	9613095207	9613095217	9613095210	9613095210
		1	Seal ring set, (10 pcs.) EPDM	8010023169	8010023169	8010023170	8010023171	8010023172	8010023172
75		1	Lower plug	9613014602	9613016502	9613009402	9613091102	9613017502	9613017504
Lower sealing element									
70		2	Flushing tube	9613007901	9613007902	9613007903	9613007904	9613007904	9613007905
71	♦	2	O-ring, EPDM	9611993119	9611993119	9611993119	9611993119	9611993119	9611993119
72		1	Drain	9613008001	9613008001	9613008001	9613008001	9613008001	9613008001
73		1	Nozzle	9613008002	9613008002	9613008002	9613008002	9613008002	9613008002
76	♦	1	O-ring, EPDM	9611993628	9611993632	9611993636	9611993640	9611993640	9611993644
	♦	1	O-ring, NBR	9611993629	9611993633	9611993637	9611993641	9611993641	9611993645
	♦	1	O-ring, FPM	9611993630	9611993634	9611993638	9611993642	9611993642	9611993646
	♦	1	O-ring, HNBR	9611993631	9611993635	9611993639	9611993643	9611993643	9611993647
77	♦	1	Lip seal, EPDM	9613008516	9613008521	9613008526	9613008548	9613008531	9613008531
	♦	1	Lip seal, NBR	9613008517	9613008522	9613008527	9613008549	9613008532	9613008532
	♦	1	Lip seal, FPM	9613008518	9613008523	9613008528	9613008550	9613008533	9613008533
	♦	1	Lip seal, HNBR	9613008519	9613008524	9613008529	9613008551	9613008534	9613008534
78	♦	1	O-ring, EPDM	9611993655	9611993650	9611993651	9611994407	9611993652	9611993652
79		1	Lower sealing element	9613023801	9613049501	9613049601	9613066101	9613049701	9613049801
80		1	Guide ring, PTFE	9613008412	9613008413	9613008414	9613008420	9613008415	9613008415
81		1	Cover	9613049001	9613049005	9613049006	9613049015	9613049007	9613049007
Extra parts if clamped valve body									
52		1	O-ring, EPDM	9611993628	9611993632	9611993636	9611993640	9611993640	9611993644
		1	O-ring, NBR	9611993629	9611993633	9611993637	9611993641	9611993641	9611993645
		1	O-ring, FPM	9611993630	9611993634	9611993638	9611993642	9611993642	9611993646
		1	O-ring, HNBR	9611993631	9611993635	9611993639	9611993643	9611993643	9611993647

Pos. 37, see section

See note below service kits.

1.7

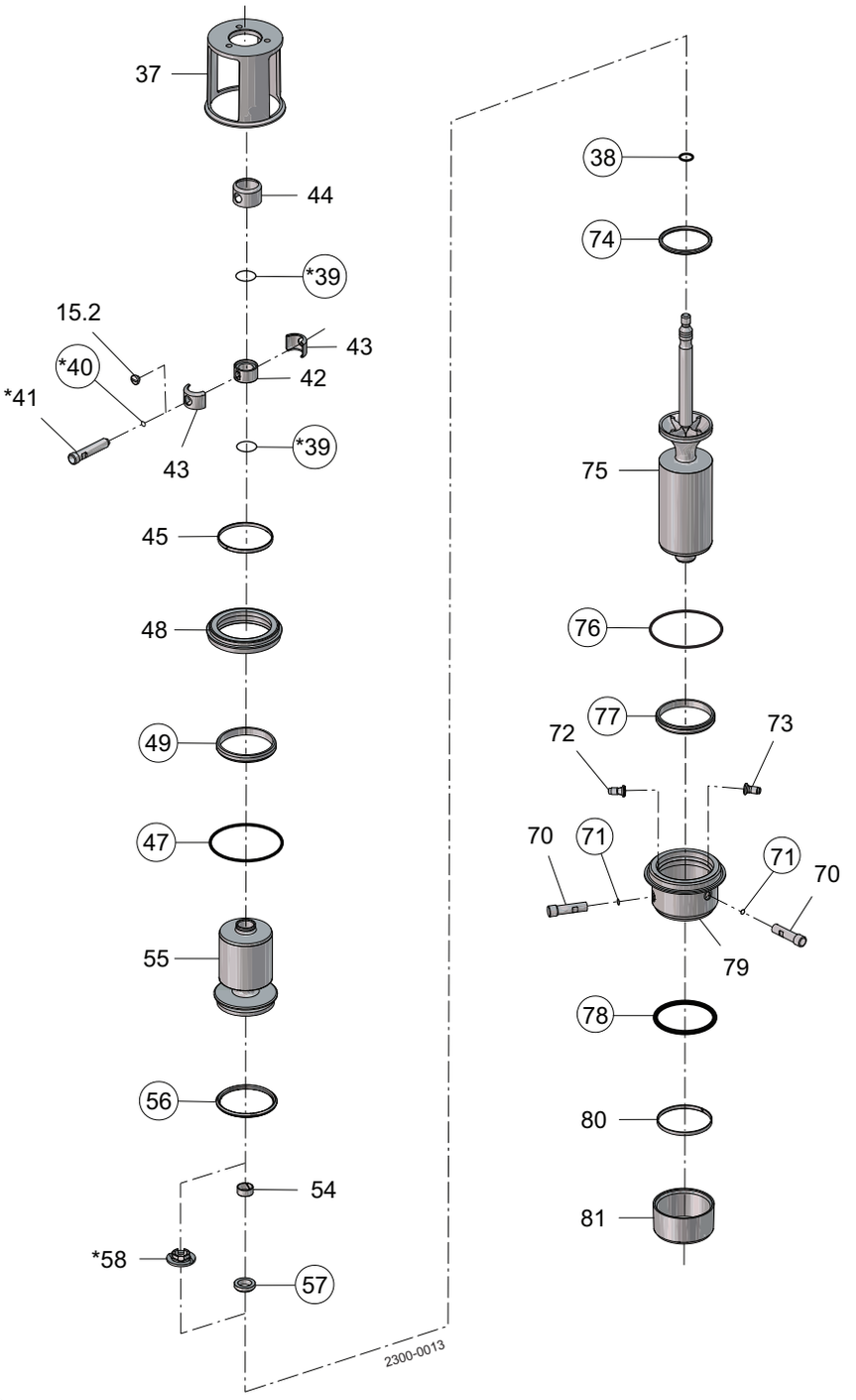

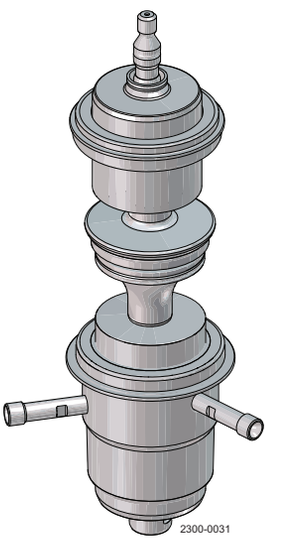

◯ = wear parts

★ = with SpiralClean in leakage chamber

		DN/OD 38 DN 40 Seat ø53.3	DN/OD 51 DN 50 Seat ø53.3	DN/OD 63.5 DN/OD 76.1 DN 65/DN 80 Seat ø81.3	#2 DN/OD 101.6 DN 100 Seat ø100.3	#1 DN/OD 101.6 DN 100 Seat ø115.3	DN 125 DN 150 Seat ø115.3
♦	Service kit, EPDM	9611921622	9611921623	9611921624	9611926346	9611921626	9611926037
♦	Service kit, NBR	9611921628	9611921629	9611921630	9611926347	9611921632	9611926038
♦	Service kit, FPM	9611921634	9611921635	9611921636	9611926348	9611921638	9611926039
♦	Service kit, HNBR	9611921640	9611921641	9611921642	9611926349	9611921644	9611926040

1.7

For mixed size housings, the service kit is determined by the smallest size connection on the valve.
One exception is any housing with 6” connections will always refer to the 6” service kits listed below:

♦	Service kit, EPDM	9611926089	9611926117	9611926181	9611926386	9611926245	
♦	Service kit, NBR	9611926090	9611926118	9611926182	9611926387	9611926246	
♦	Service kit, FPM	9611926091	9611926119	9611926183	9611926388	9611926247	
♦	Service kit, HNBR	9611926092	9611926120	9611926184	9611926389	9611926248	

Parts marked with ♦ are included in the service kit.
#1 = Serial no. below 1030000 - manufactured before October 1st 2003
#2 = Serial no. above 1030000 - manufactured after October 1st 2003

NOTE!
If different connection size on upper and lower body, except for size 6", it is always the smallest body that determines the service kit.
If clamped valve body an extra O-ring (pos. 52) is required.
If SpiralClean in leakage chamber extra O-rings (2x pos. 39 and 1x pos. 40) is required.
Spare parts for mix size please refer to Configurator in AL Anytime

NOTE!
All FPM service kits are supplied with EPDM seal ring, pos. 74.

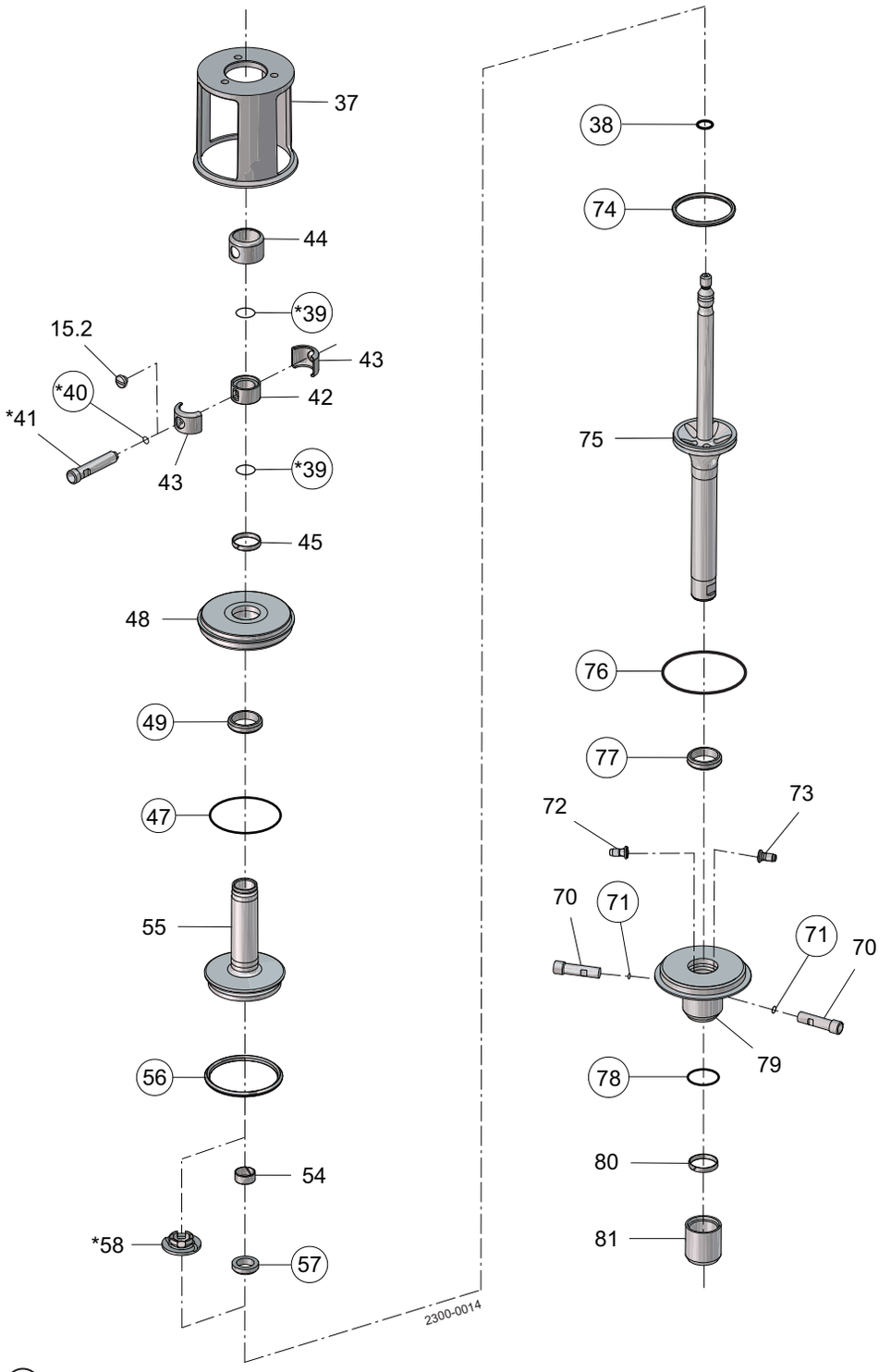

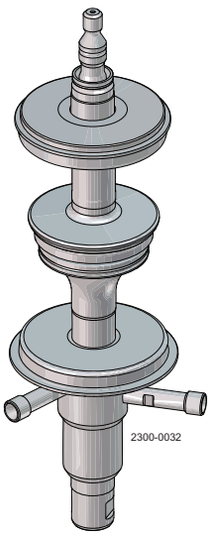

◯ = wear parts
✶ = with SpiralClean in leakage chamber

Pos. 37, see section
See note below service kits.

Pos		Qty	Denomination	DN/OD 51 DN 50 Seat ø53.3	DN/OD 63.5 DN/OD 76.1 DN 65/DN 80 Seat ø81.3	#2 DN/OD 101.6 DN 100 Seat ø100.3	#1 DN/OD 101.6 DN 100 Seat ø115.3	DN 125 DN 150 Seat ø115.3
Spindle liner								
15		1	Plug	9613414101	9613414101	9613414101	9613414101	9613414101
42		1	Spindle liner	9613011601	9613009001	9613009001	9613009001	9613009001
43		2	Clamp	9613011801	9613009201	9613009201	9613009201	9613009201
44		1	Lock	9613011701	9613009101	9613009101	9613009101	9613009101
Extra parts if SpiralClean in vent cavity								
39		2	O-ring, EPDM	9611993492	9611993493	9611993493	9611993493	9611993493
40		1	O-ring, EPDM	9611993119	9611993119	9611993119	9611993119	9611993119
41		1	Flushing tube	3135710172	3135710172	3135710172	3135710172	3135710172
58		1	Spray nozzle, PVDF	9613008801	9613014801	9613014801	9613014801	9613014801
Upper sealing element								
45		1	Guide ring, PTFE	9613008416	9613008417	9613008417	9613008417	9613008417
47	♦	1	O-ring, EPDM	9611993632	9611993636	9611993640	9611993640	9611993644
	♦	1	O-ring, NBR	9611993633	9611993637	9611993641	9611993641	9611993645
	♦	1	O-ring, FPM	9611993634	9611993638	9611993642	9611993642	9611993646
	♦	1	O-ring, HNBR	9611993635	9611993639	9611993643	9611993643	9611993647
48		1	Upper sealing element	9613014201	9613006401	9613018801	9613018801	9613017001
49	♦	1	Lip seal, EPDM	9613008501	9613008511	9613008511	9613008511	9613008511
	♦	1	Lip seal, NBR	9613008502	9613008512	9613008512	9613008512	9613008512
	♦	1	Lip seal, FPM	9613008503	9613008513	9613008513	9613008513	9613008513
	♦	1	Lip seal, HNBR	9613008504	9613008514	9613008514	9613008514	9613008514
Upper plug								
54		1	Guide ring, PTFE	9613008401	9613008402	9613008402	9613008402	9613008402
55		1	Upper plug	9613016201	9613008201	9613091401	9613017201	9613017203
56	♦	1	Seal ring, EPDM	9613095106	9613095109	9613095119	9613095112	9613095112
	♦	1	Seal ring, NBR	9613095114	9613095115	9613095120	9613095116	9613095116
	♦	1	Seal ring, FPM	9613095105	9613095108	9613095118	9613095111	9613095111
	♦	1	Seal ring, HNBR	9613095104	9613095107	9613095117	9613095110	9613095110
		1	Seal ring set, (10 pcs.) EPDM	8010023165	8010023166	8010023167	8010023168	8010023168
57	♦	1	Lip seal, EPDM	9613008706	9613008711	9613008711	9613008711	9613008711
	♦	1	Lip seal, NBR	9613008707	9613008712	9613008712	9613008712	9613008712
	♦	1	Lip seal, FPM	9613008708	9613008713	9613008713	9613008713	9613008713
	♦	1	Lip seal, HNBR	9613008709	9613008714	9613008714	9613008714	9613008714
Lower plug								
38	♦	1	O-ring, EPDM	9611993555	9611993572	9611993572	9611993572	9611993572
		1	O-ring set, (10 pcs.) EPDM	8010023163	8010023164	8010023164	8010023164	8010023164
74	♦	1	Seal ring, EPDM	9613095206	9613095209	9613095219	9613095212	9613095212
	♦	1	Seal ring, NBR	9613095214	9613095215	9613095220	9613095216	9613095216
	♦	1	Seal ring, FPM Alfa Laval recommends EPDM	9613095205	9613095208	9613095218	9613095211	9613095211
	♦	1	Seal ring, HNBR	9613095204	9613095207	9613095217	9613095210	9613095210
		1	Seal ring set, (10 pcs.) EPDM	8010023169	8010023170	8010023171	8010023172	8010023172
75		1	Lower plug	9613016402	9613008302	9613091002	9613017402	9613017404
Lower sealing element								
70		2	Flushing tube	9613007902	9613007903	9613007904	9613007904	9613007905
71	♦	2	O-ring, EPDM	9611993119	9611993119	9611993119	9611993119	9611993119
72		1	Drain	9613008001	9613008001	9613008001	9613008001	9613008001
73		1	Nozzle	9613008002	9613008002	9613008002	9613008002	9613008002
76	♦	1	O-ring, EPDM	9611993632	9611993636	9611993640	9611993640	9611993644
	♦	1	O-ring, NBR	9611993633	9611993637	9611993641	9611993641	9611993645
	♦	1	O-ring, FPM	9611993634	9611993638	9611993642	9611993642	9611993646
	♦	1	O-ring, HNBR	9611993635	9611993639	9611993643	9611993643	9611993647
77	♦	1	Lip seal, EPDM,	9613008501	9613008511	9613008511	9613008511	9613008511
	♦	1	Lip seal, NBR	9613008502	9613008512	9613008512	9613008512	9613008512
	♦	1	Lip seal, FPM	9613008503	9613008513	9613008513	9613008513	9613008513
	♦	1	Lip seal, HNBR	9613008504	9613008514	9613008514	9613008514	9613008514
78	♦	1	O-ring, EPDM	9611993653	9611993654	9611993654	9611993654	9611993654
79		1	Lower sealing element	9613024001	9613024201	9613024401	9613024401	9613024601
80		1	Guide ring, PTFE	9613008416	9613008417	9613008417	9613008417	9613008417
81		1	Cover	9613049002	9613049003	9613049004	9613049004	9613049004
Extra parts if clamped valve body								
52		1	O-ring, EPDM	9611993632	9611993636	9611993640	9611993640	9611993644
		1	O-ring, NBR	9611993633	9611993637	9611993641	9611993641	9611993645
		1	O-ring, FPM	9611993634	9611993638	9611993642	9611993642	9611993646
		1	O-ring, HNBR	9611993635	9611993639	9611993643	9611993643	9611993647

Pos. 37, see section

See note below service kits.

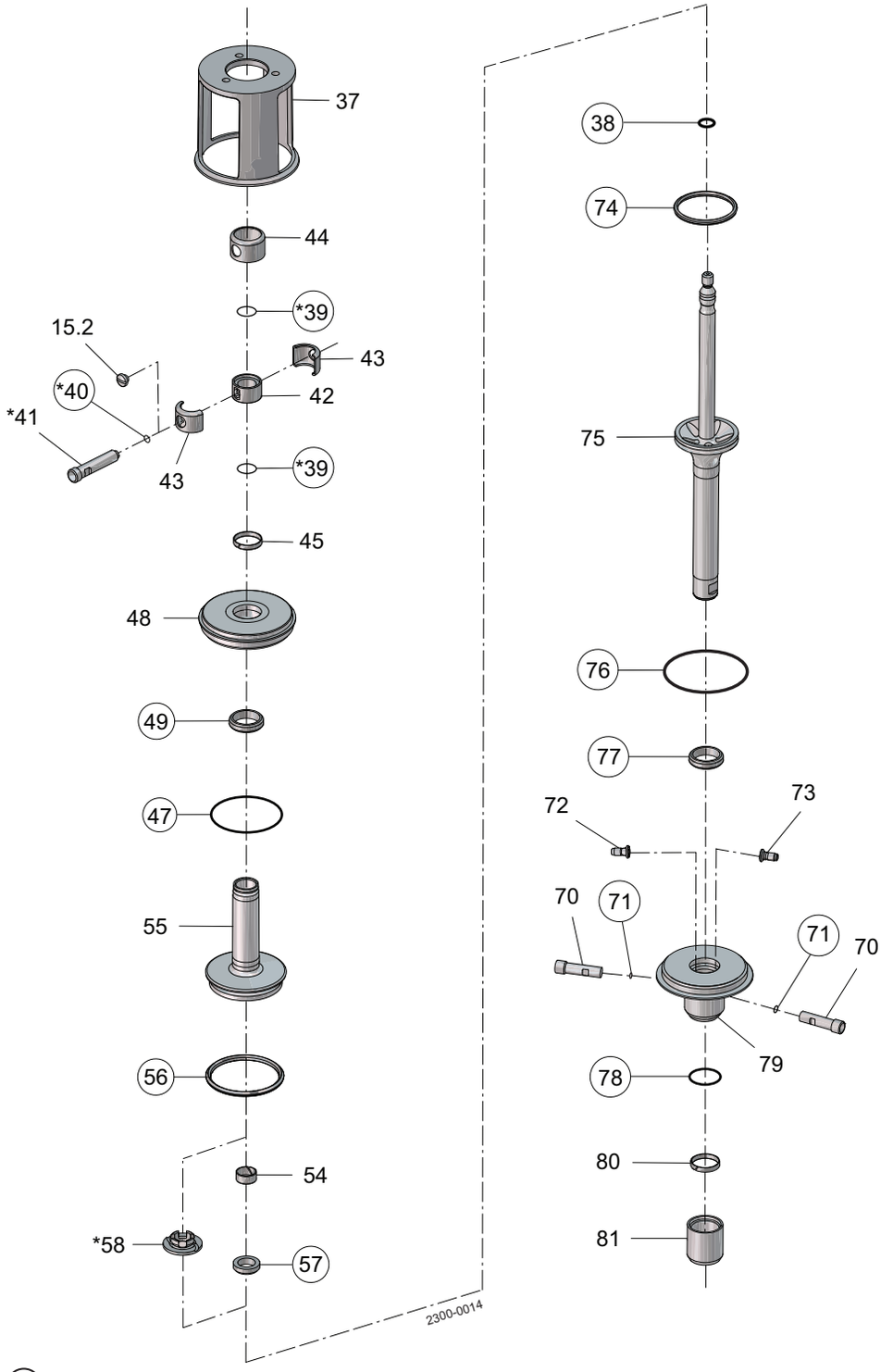

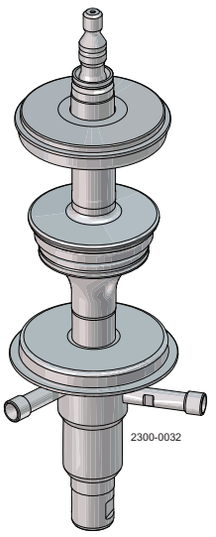

◯ = wear parts

✶ = with SpiralClean in leakage chamber

		DN/OD 51 DN 50 Seat ø53.3	DN/OD 63.5 DN/OD 76.1 DN 65/DN 80 Seat ø81.3	#2 DN/OD 101.6 DN 100 Seat ø100.3	#1 DN/OD 101.6 DN 100 Seat ø115.3	DN 125 DN 150 Seat ø115.3
♦	Service kit, EPDM	9611921550	9611921552	9611926334	9611921554	9611926025
♦	Service kit, NBR	9611921556	9611921558	9611926335	9611921560	8010000502
♦	Service kit, FPM	9611921562	9611921564	9611926336	9611921566	8010000503
♦	Service kit, HNBR	9611921568	9611921570	9611926337	9611921572	8010000504

For mixed size housings, the service kit is determined by the smallest size connection on the valve.
One exception is any housing with 6" connections will always refer to the 6" service kits listed below:

♦	Service kit, EPDM	9611926105	9611926169	9611926374	9611926233	
♦	Service kit, NBR	9611926106	9611926170	9611926375	9611926234	
♦	Service kit, FPM	9611926107	9611926171	9611926376	9611926235	
♦	Service kit, HNBR	9611926108	9611926172	9611926377	9611926236	

Parts marked with ♦ are included in the service kit.
#1 = Serial no. below 1030000 - manufactured before October 1st 2003
#2 = Serial no. above 1030000 - manufactured after October 1st 2003

NOTE!
If different connection size on upper and lower body, except for size 6", it is always the smallest body that determines the service kit.
If clamped valve body an extra O-ring (pos. 52) is required.
If SpiralClean in leakage chamber extra O-rings (2x pos. 39 and 1x pos. 40) is required.
Spare parts for mix size please refer to Configurator in AL Anytime

NOTE!
All FPM service kits are supplied with EPDM seal ring, pos. 74.

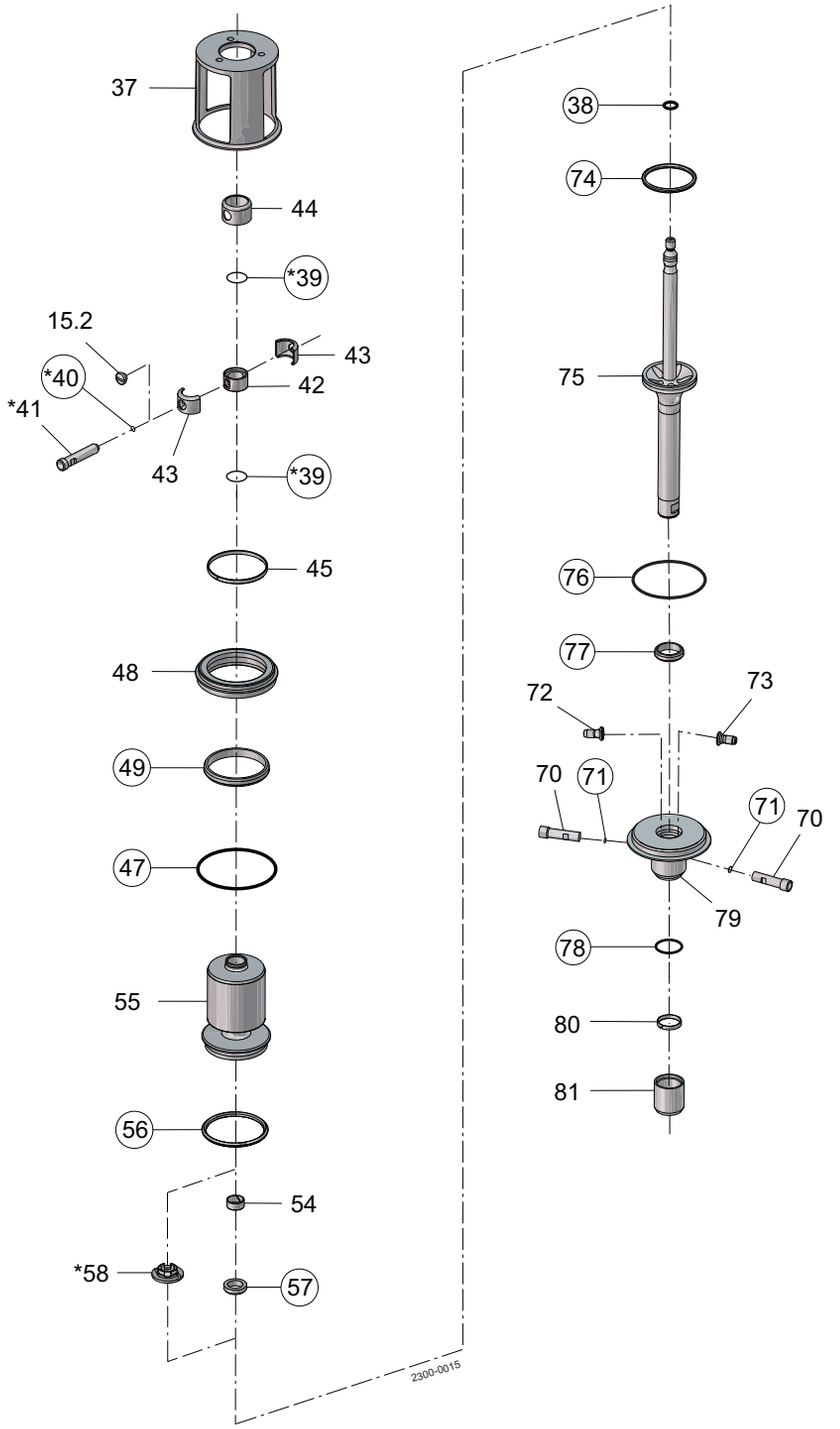

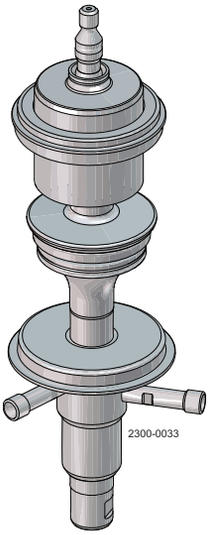

◯ = wear parts
✶ = with SpiralClean in leakage chamber

Pos. 37, see section
See note below service kits.

Pos		Qty	Denomination	DN/OD 51 DN 50 Seat ø53.3	DN/OD 63.5 DN/OD 76.1 DN 65/DN 80 Seat ø81.3	#2 DN/OD 101.6 DN 100 Seat ø100.3	#1 DN/OD 101.6 DN 100 Seat ø115.3	DN 125 DN 150 Seat ø115.3
15		1	Plug	9613414101	9613414101	9613414101	9613414101	9613414101
42		1	Spindle liner	9613011601	9613009001	9613009001	9613009001	9613009001
43		2	Clamp	9613011801	9613009201	9613009201	9613009201	9613009201
44		1	Lock	9613011701	9613009101	9613009101	9613009101	9613009101
Extra parts if SpiralClean in vent cavity								
39		2	O-ring, EPDM	9611993492	9611993493	9611993493	9611993493	9611993493
40		1	O-ring, EPDM	9611993119	9611993119	9611993119	9611993119	9611993119
41		1	Flushing tube	3135710172	3135710172	3135710172	3135710172	3135710172
58		1	Spray nozzle, PVDF	9613008801	9613014801	9613014801	9613014801	9613014801
Upper sealing element								
45		1	Guide ring, PTFE	9613008413	9613008414	9613008420	9613008415	9613008415
47	♦	1	O-ring, EPDM	9611993632	9611993636	9611993640	9611993640	9611993644
	♦	1	O-ring, NBR	9611993633	9611993637	9611993641	9611993641	9611993645
	♦	1	O-ring, FPM	9611993634	9611993638	9611993642	9611993642	9611993646
	♦	1	O-ring, HNBR	9611993635	9611993639	9611993643	9611993643	9611993647
48		1	Upper sealing element	9613014202	9613006402	9613066001	9613018802	9613017002
49	♦	1	Lip seal, EPDM	9613008521	9613008526	9613008548	9613008531	9613008531
	♦	1	Lip seal, NBR	9613008522	9613008527	9613008549	9613008532	9613008532
	♦	1	Lip seal, FPM	9613008523	9613008528	9613008550	9613008533	9613008533
	♦	1	Lip seal, HNBR	9613008524	9613008529	9613008551	9613008534	9613008534
Upper plug								
54		1	Guide ring, PTFE	9613008401	9613008402	9613008402	9613008402	9613008402
55		1	Upper plug	9613016301	9613009301	9613091501	9613017301	9613017303
56		1	Seal ring, EPDM	9613095106	9613095109	9613095119	9613095112	9613095112
		1	Seal ring, NBR	9613095114	9613095115	9613095120	9613095116	9613095116
		1	Seal ring, FPM	9613095105	9613095108	9613095118	9613095111	9613095111
		1	Seal ring, HNBR	9613095104	9613095107	9613095117	9613095110	9613095110
		1	Seal ring set, (10 pcs.) EPDM	8010023165	8010023166	8010023167	8010023168	8010023168
57	♦	1	Lip seal, EPDM	9613008706	9613008711	9613008711	9613008711	9613008711
	♦	1	Lip seal, NBR	9613008707	9613008712	9613008712	9613008712	9613008712
	♦	1	Lip seal, FPM	9613008708	9613008713	9613008713	9613008713	9613008713
	♦	1	Lip seal, HNBR	9613008709	9613008714	9613008714	9613008714	9613008714
Lower plug								
38	♦	1	O-ring, EPDM	9611993555	9611993572	9611993572	9611993572	9611993572
		1	O-ring set, (10 pcs.) EPDM	8010023163	8010023164	8010023164	8010023164	8010023164
74	♦	1	Seal ring, EPDM	9613095206	9613095209	9613095219	9613095212	9613095212
	♦	1	Seal ring, NBR	9613095214	9613095215	9613095220	9613095216	9613095216
	♦	1	Seal ring, FPM Alfa Laval recommends EPDM	9613095205	9613095208	9613095218	9613095211	9613095211
	♦	1	Seal ring, HNBR	9613095204	9613095207	9613095217	9613095210	9613095210
		1	Seal ring set, (10 pcs.) EPDM	8010023169	8010023169	8010023170	8010023171	8010023172
75		1	Lower plug	9613008302	9613091002	9613017402	9613017404	
Lower sealing element								
70		2	Flushing tube	9613007902	9613007903	9613007904	9613007904	9613007905
71	♦	2	O-ring, EPDM	9611993119	9611993119	9611993119	9611993119	9611993119
72		1	Drain	9613008001	9613008001	9613008001	9613008001	9613008001
73		1	Nozzle	9613008002	9613008002	9613008002	9613008002	9613008002
76	♦	1	O-ring, EPDM	9611993632	9611993636	9611993640	9611993640	9611993644
	♦	1	O-ring, NBR	9611993633	9611993637	9611993641	9611993641	9611993645
	♦	1	O-ring, FPM	9611993634	9611993638	9611993642	9611993642	9611993646
	♦	1	O-ring, HNBR	9611993635	9611993639	9611993643	9611993643	9611993647
77	♦	1	Lip seal, EPDM	9613008501	9613008511	9613008511	9613008511	9613008511
	♦	1	Lip seal, NBR	9613008502	9613008512	9613008512	9613008512	9613008512
	♦	1	Lip seal, FPM	9613008503	9613008513	9613008513	9613008513	9613008513
	♦	1	Lip seal, HNBR	9613008504	9613008514	9613008514	9613008514	9613008514
78		1	O-ring, EPDM	9611993653	9611993654	9611993654	9611993654	9611993654
79		1	Lower sealing element	9613024001	9613024201	9613024401	9613024401	9613024601
80		1	Guide ring, PTFE	9613008416	9613008417	9613008417	9613008417	9613008417
81		1	Cover	9613049002	9613049003	9613049004	9613049004	9613049004
Extra parts if clamped valve body								
52		1	O-ring, EPDM	9611993632	9611993636	9611993640	9611993640	9611993644
		1	O-ring, NBR	9611993633	9611993637	9611993641	9611993641	9611993645
		1	O-ring, FPM	9611993634	9611993638	9611993642	9611993642	9611993646
		1	O-ring, HNBR	9611993635	9611993639	9611993643	9611993643	9611993647

Pos. 37, see section

See note below service kits.

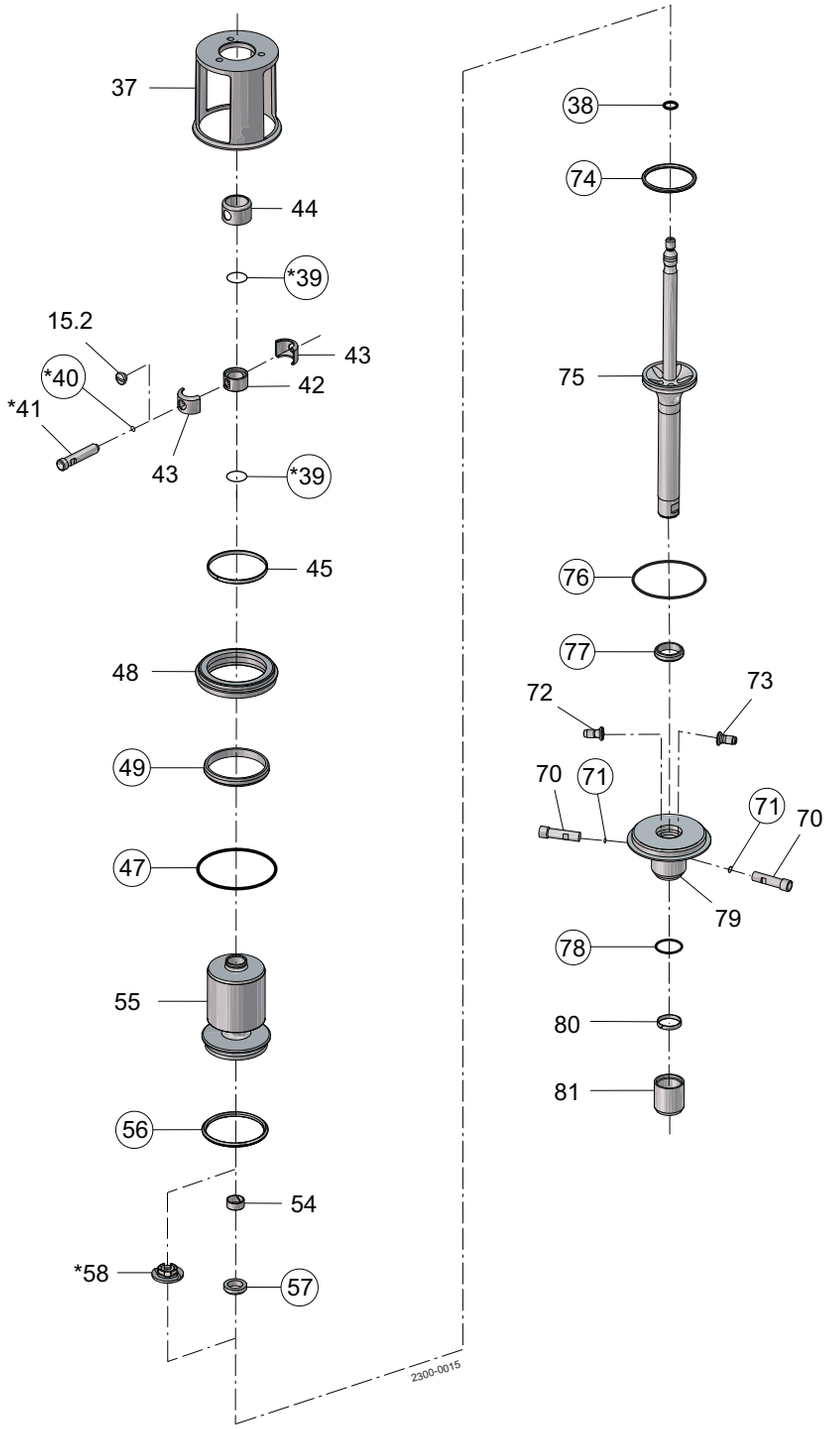

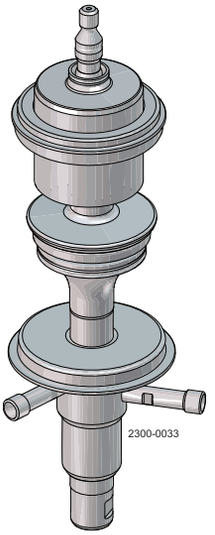

◯ = wear parts

✶ = with SpiralClean in leakage chamber

	DN/OD 51 DN 50 Seat ø53.3	DN/OD 63.5 DN/OD 76.1 DN 65/DN 80 Seat ø81.3	#2 DN/OD 101.6 DN 100 Seat ø100.3	#1 DN/OD 101.6 DN 100 Seat ø115.3	DN 125 DN 150 Seat ø115.3
♦ Service kit, EPDM	9611921598	9611921599	9611926342	9611921602	9611926033
♦ Service kit, NBR	9611921605	9611921606	9611926343	9611921608	9611926034
♦ Service kit, FPM	9611921611	9611921612	9611926344	9611921614	9611926035
♦ Service kit, HNBR	9611921617	9611921618	9611926345	9611921620	9611926036

1.7

For mixed size housings, the service kit is determined by the smallest size connection on the valve.
One exception is any housing with 6" connections will always refer to the 6" service kits listed below:

♦ Service kit, EPDM	9611926113	9611926177	9611926382	9611926241
♦ Service kit, NBR	9611926114	9611926178	9611926383	9611926242
♦ Service kit, FPM	9611926115	9611926179	9611926384	9611926243
♦ Service kit, HNBR	9611926116	9611926180	9611926385	9611926244

Parts marked wtth ♦ are included in the service kit.
#1 = Serial no. below 1030000 - manufactured before October 1st 2003
#2 = Serial no. above 1030000 - manufactured after October 1st 2003

NOTE!
If different connection size on upper and lower body, except for size 6", it is always the smallest body that determines the service kit.
If clamped valve body an extra O-ring (pos. 52) is required.
If SpiralClean in leakage chamber extra O-rings (2x pos. 39 and 1x pos. 40) is required.
Spare parts for mix size please refer to Configurator in AL Anytime

NOTE!
All FPM service kits are supplied with EPDM seal ring, pos. 74.

1.7

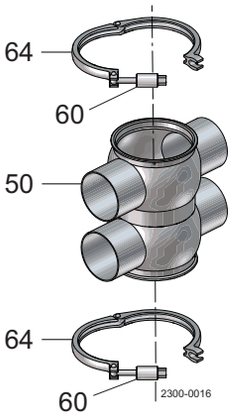

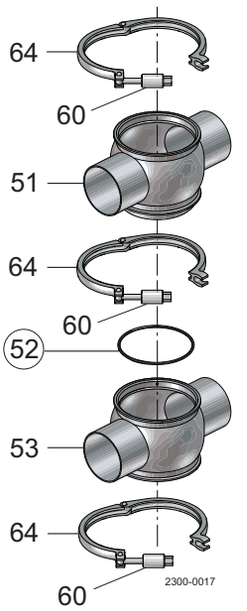

Body combination - welded bodies

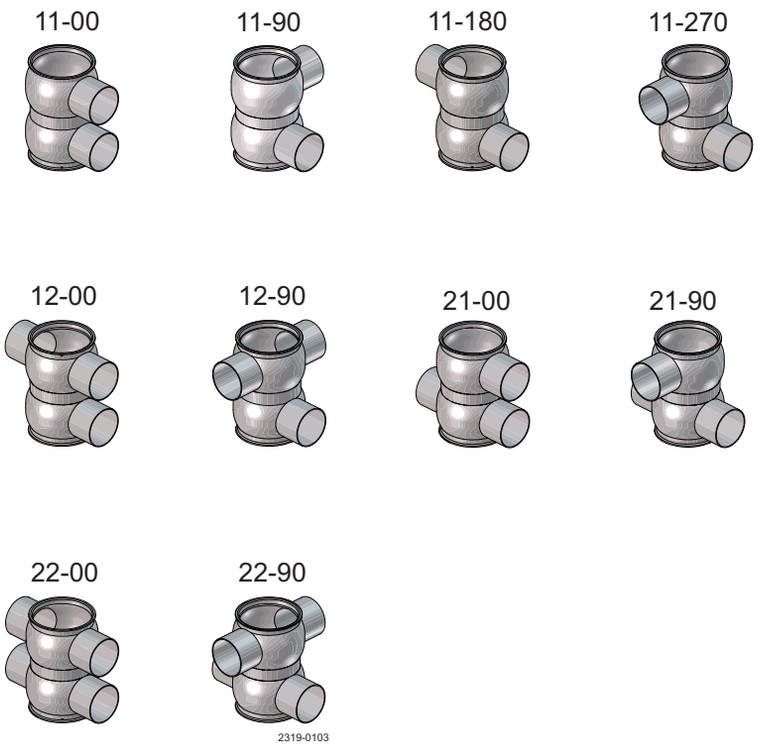

Pos	Qty	Denomination	DN/OD38 Seat ø53.3	DN40 Seat ø53.3	DN/OD51 Seat ø53.3	DN50 Seat ø53.3
37	1	Intermediate piece, plug set-up 9-16	9613015601	9613015602	9613019001	9613019002
	1	Intermediate piece, plug set-up 1-8	9613015603	9613015604	9613019004	9613019005
60	2	Hexnut	9613023201	9613023201	9613023201	9613023201
64	2	Clamp without nut	9613021401	9613021401	9613021501	9613021501
External and internal blasted						
50	1	Valve body, 11-00	9613057101	9613057111	9613057201	9613057211
	1	Valve body, 12-00	9613057105	9613057115	9613057205	9613057215
	1	Valve body, 21-00	9613057107	9613057117	9613057207	9613057217
	1	Valve body, 22-00	9613057109	9613057119	9613057209	9613057219
	1	Valve body, 11-90	9613057102	9613057112	9613057202	9613057212
	1	Valve body, 12-90	9613057106	9613057116	9613057206	9613057216
	1	Valve body, 21-90	9613057108	9613057118	9613057208	9613057218
	1	Valve body, 22-90	9613057110	9613057120	9613057210	9613057220
	1	Valve body, 11-180	9613057103	9613057113	9613057203	9613057213
	1	Valve body, 11-270	9613057104	9613057114	9613057204	9613057214
Clamped valve body						
External and internal blasted						
51	1	Valve body, upper, 1 port	9613058003	9613058103	9613058005	9613058105
	1	Valve body, upper, 2 ports	9613058004	9613058104	9613058006	9613058106
53	1	Valve body, lower, 1 port	9613058303	9613058403	9613058305	9613058405
	1	Valve body, lower, 2 ports	9613058304	9613058404	9613058306	9613058406
Extra parts if clamped valve body						
52	1	O-ring, EPDM	9611993628	9611993628	9611993632	9611993632
	1	O-ring, NBR	9611993629	9611993629	9611993633	9611993633
	1	O-ring, FPM	9611993630	9611993630	9611993634	9611993634
	1	O-ring, HNBR	9611993631	9611993631	9611993635	9611993635
60	1	Hexnut	9613023201	9613023201	9613023201	9613023201
64	1	Clamp without nut	9613021401	9613021401	9613021501	9613021501

Pos	Qty	Denomination	DN/OD 63.5 seat ø81.3	DN65 seat ø81.3	DN/OD 76.1 seat ø81.3	DN80 seat ø81.3
37	1	Intermediate piece, plug set-up 9-16	9613019101	9613019102	9613019103	9613019104
	1	Intermediate piece, plug set-up 1-8	9613019106	9613019107	9613019108	9613019109
60	2	Hexnut	9613023201	9613023201	9613023201	9613023201
64	2	Clamp without nut	9613021601	9613021601	9613021601	9613021601
External and internal blasted						
50	1	Valve body, 11-00	9613057301	9613057311	9613057401	9613057411
	1	Valve body, 12-00	9613057305	9613057315	9613057405	9613057415
	1	Valve body, 21-00	9613057307	9613057317	9613057407	9613057417
	1	Valve body, 22-00	9613057309	9613057319	9613057409	9613057419
	1	Valve body, 11-90	9613057302	9613057312	9613057402	9613057412
	1	Valve body, 12-90	9613057306	9613057316	9613057406	9613057416
	1	Valve body, 21-90	9613057308	9613057318	9613057408	9613057418
	1	Valve body, 22-90	9613057310	9613057320	9613057410	9613057420
	1	Valve body, 11-180	9613057303	9613057313	9613057403	9613057413
	1	Valve body, 11-270	9613057304	9613057314	9613057404	9613057414
Clamped valve body						
External and internal blasted						
51	1	Valve body, upper, 1 port	9613058007	9613058107	9613058009	9613058109
	1	Valve body, upper, 2 ports	9613058008	9613058108	9613058010	9613058110
53	1	Valve body, lower, 1 port	9613058307	9613058407	9613058309	9613058409
	1	Valve body, lower, 2 ports	9613058308	9613058408	9613058310	9613058410
Extra parts if clamped valve body						
52	1	O-ring, EPDM	9611993636	9611993636	9611993636	9611993636
	1	O-ring, NBR	9611993637	9611993637	9611993637	9611993637
	1	O-ring, FPM	9611993638	9611993638	9611993638	9611993638
	1	O-ring, HNBR	9611993639	9611993639	9611993639	9611993639
60	1	Hexnut	9613023201	9613023201	9613023201	9613023201
64	1	Clamp without nut	9613021601	9613021601	9613021601	9613021601

NOTE!

If different connection size on upper and lower body, except for size 6", it is always the smallest body that determines the service kit.

If clamped valve body an extra O-ring (pos. 52) is required.

Spare parts for mix size please refer to Configurator in AL Anytime

1.7

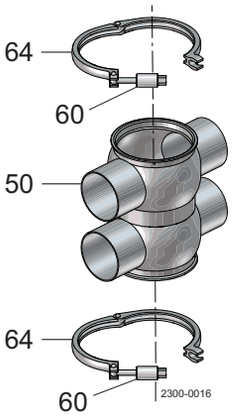

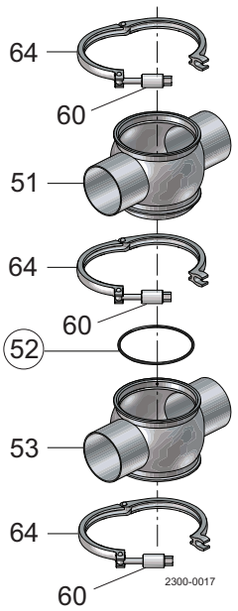

Body combination - welded bodies

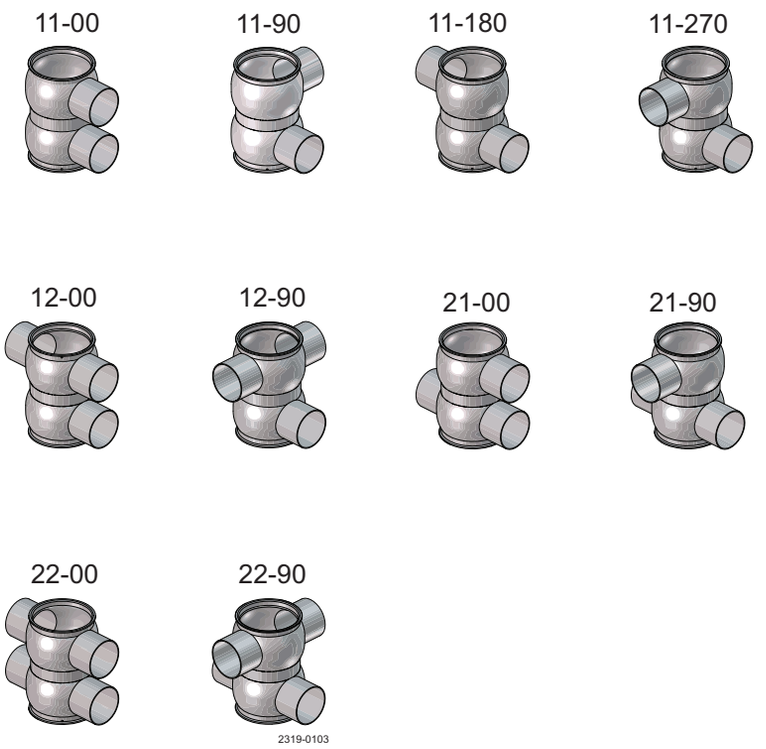

Pos	Qty	Denomination	#2 DN/OD101.6 Seat ø100.3	#2 DN100 Seat ø100.3	#1 DN/OD101.6 Seat ø115	#1 DN100 Seat ø115	DN125 Seat ø115	DN 150 Seat ø115
37	1	Intermediate piece, plug set-up 9-16	9613019201	9613019202	9613019201	9613019202	9613019301	9613019303
	1	Intermediate piece, plug set-up 1-8	9613019204	9613019205	9613019204	9613019205	9613019305	9613019307
60	2	Hexnut	9613023201	9613023201	9613023201	9613023201	9613023201	9613023201
64	2	Clamp without nut	9613021701	9613021701	9613021701	9613021701	9613021801	9613021801
External and internal blasted								
50	1	Valve body, 11-00	9613092701	9613092711	9613057601	9613057611	9613057801	9613057811
	1	Valve body, 12-00	9613092705	9613092715	9613057605	9613057615	9613057805	9613057815
	1	Valve body, 21-00	9613092707	9613092717	9613057607	9613057617	9613057807	9613057817
	1	Valve body, 22-00	9613092709	9613092719	9613057609	9613057619	9613057809	9613057819
	1	Valve body, 11-90	9613092702	9613092712	9613057602	9613057612	9613057802	9613057812
	1	Valve body, 12-90	9613092706	9613092716	9613057606	9613057616	9613057806	9613057816
	1	Valve body, 21-90	9613092708	9613092718	9613057608	9613057618	9613057808	9613057818
	1	Valve body, 22-90	9613092710	9613092720	9613057610	9613057620	9613057810	9613057820
	1	Valve body, 11-180	9613092703	9613092713	9613057603	9613057613	9613057803	9613057813
	1	Valve body, 11-270	9613092704	9613092714	9613057604	9613057614	9613057804	9613057814
Clamped valve body								
External and internal blasted								
51	1	Valve body, upper, 1 port	9613058037	9613058149	9613058011	9613058111	9613058113	9613058115
	1	Valve body, upper, 2 ports	9613058038	9613058150	9613058012	9613058112	9613058114	9613058116
53	1	Valve body, lower, 1 port	9613058311	9613058411	9613058311	9613058411	9613058413	9613058415
	1	Valve body, lower, 2 ports	9613058312	9613058412	9613058312	9613058412	9613058414	9613058416
Extra parts if clamped valve body								
52	1	O-ring, EPDM	9611993640	9611993640	9611993640	9611993640	9611993644	9611993644
	1	O-ring, NBR	9611993641	9611993641	9611993641	9611993641	9611993645	9611993645
	1	O-ring, FPM	9611993642	9611993642	9611993642	9611993642	9611993646	9611993646
	1	O-ring, HNBR	9611993643	9611993643	9611993643	9611993643	9611993647	9611993647
60	1	Hexnut	9613023201	9613023201	9613023201	9613023201	9613023201	9613023201
64	1	Clamp without nut	9613021701	9613021701	9613021701	9613021701	9613021801	9613021801

NOTE!

If different connection size on upper and lower body, except for size 6", it is always the smallest body that determines the service kit.

If clamped valve body an extra O-ring (pos. 52) is required.

Spare parts for mix size please refer to Configurator in AL Anytime

#1 = Serial no. below 1030000 - manufactured before October 1st 2003

#2 = Serial no. above 1030000 - manufactured after October 1st 2003

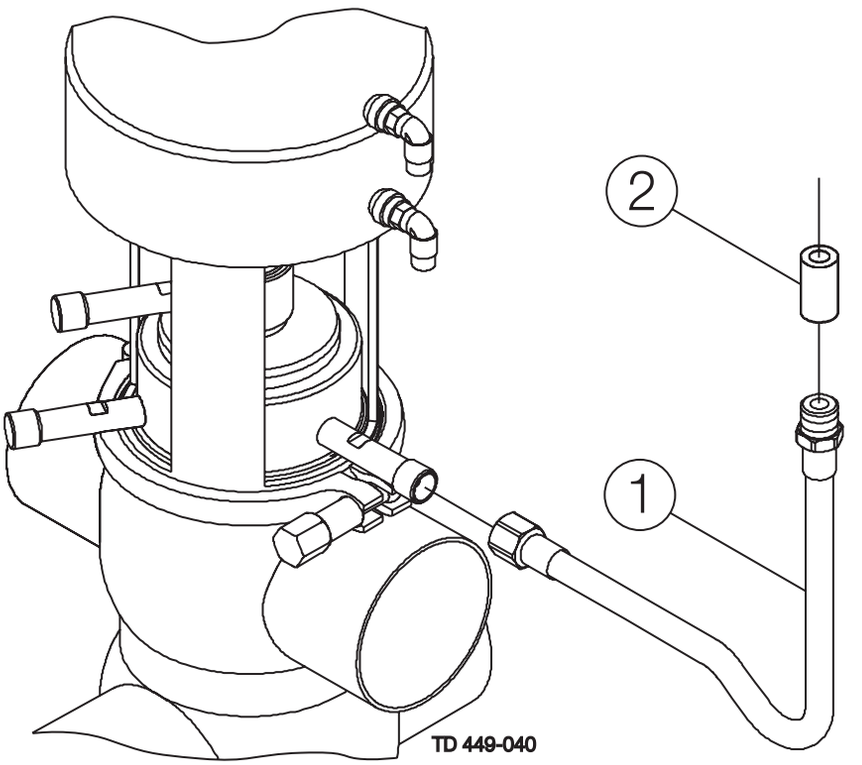
2
1
TD 449-040

Pos	Qty	Denomination	
1	1	Hose PTFE w. s.s. weave	3135707451
2	1	Welding socket	9611990917

900-111/1

1.7

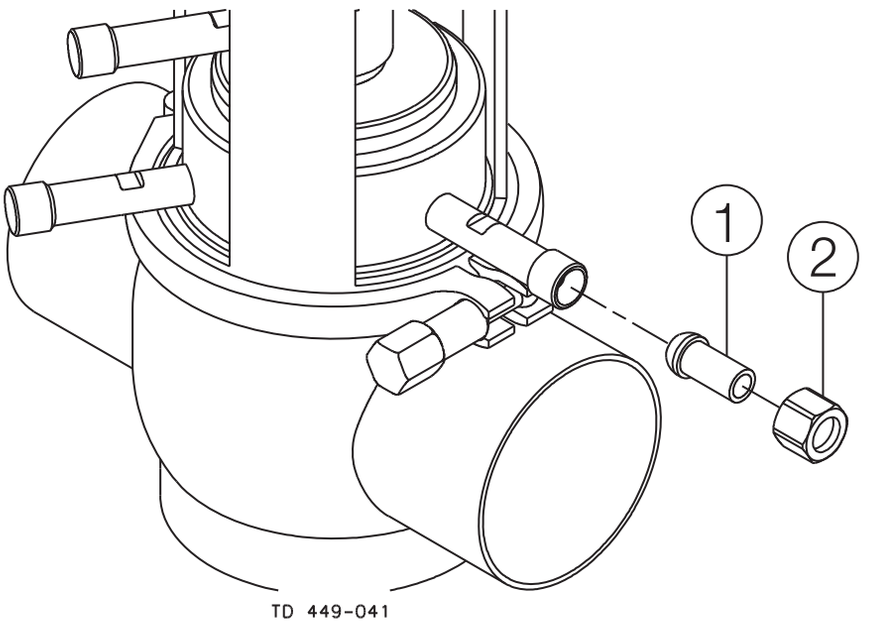

Pos	Qty	Denomination	3135710053
1	1	Welding liner	3135707431
2	1	Nut	3135707441

900-112/0

1.7

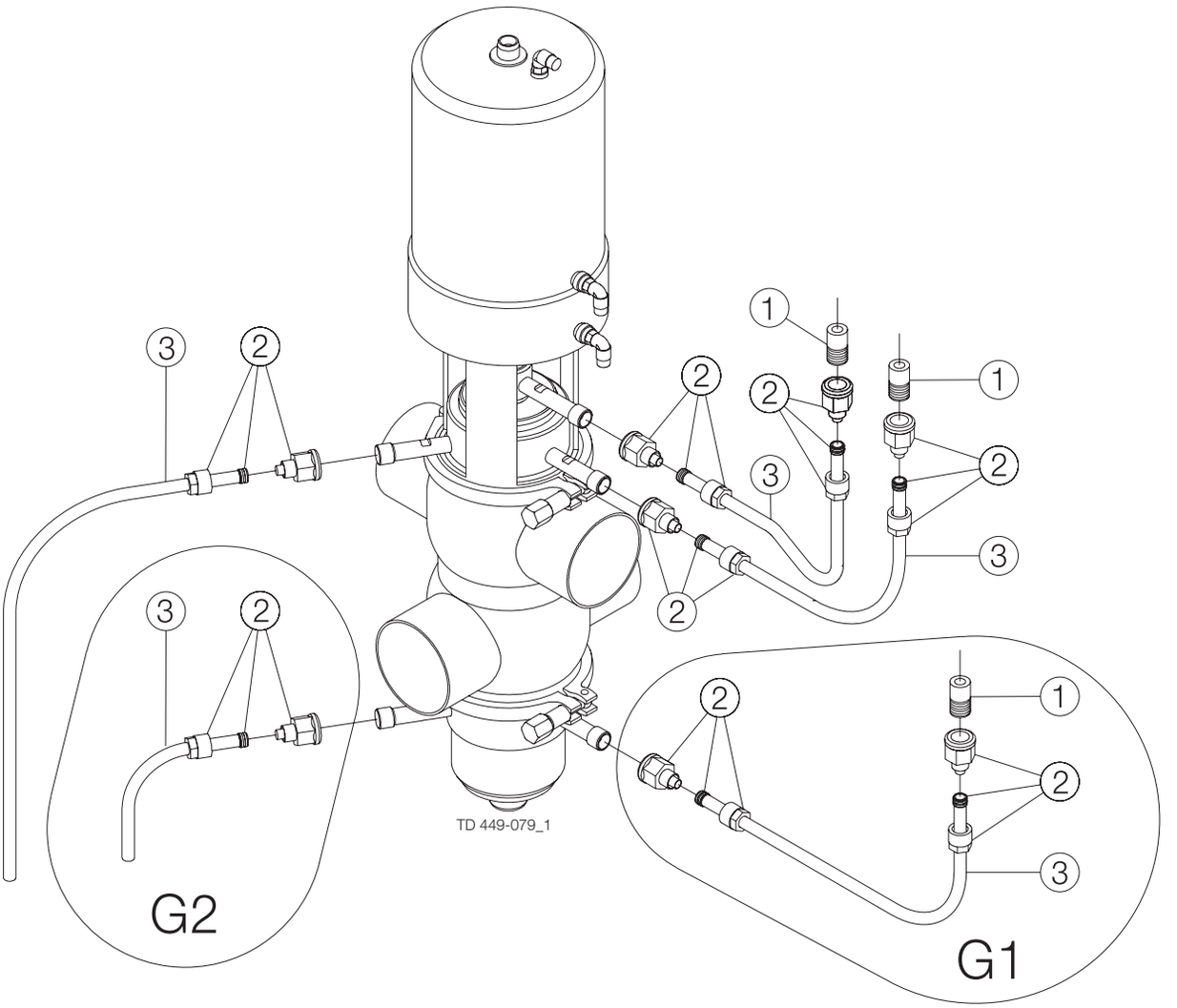

Installation Kit G1

Pos	Qty	Denomination	
1	1	Welding male part, AISI 316	3135707471
2	2	3/8" 10 mm Female PVDF	9611992372
3	1	10 mm PVDF hose, 1m	9611992607

Installation Kit G2

Pos	Qty	Denomination	
2	1	3/8" 10 mm Female PVDF	9611992372
3	1	10 mm PVDF hose, 1m	9611992607

900-113/2

1.7

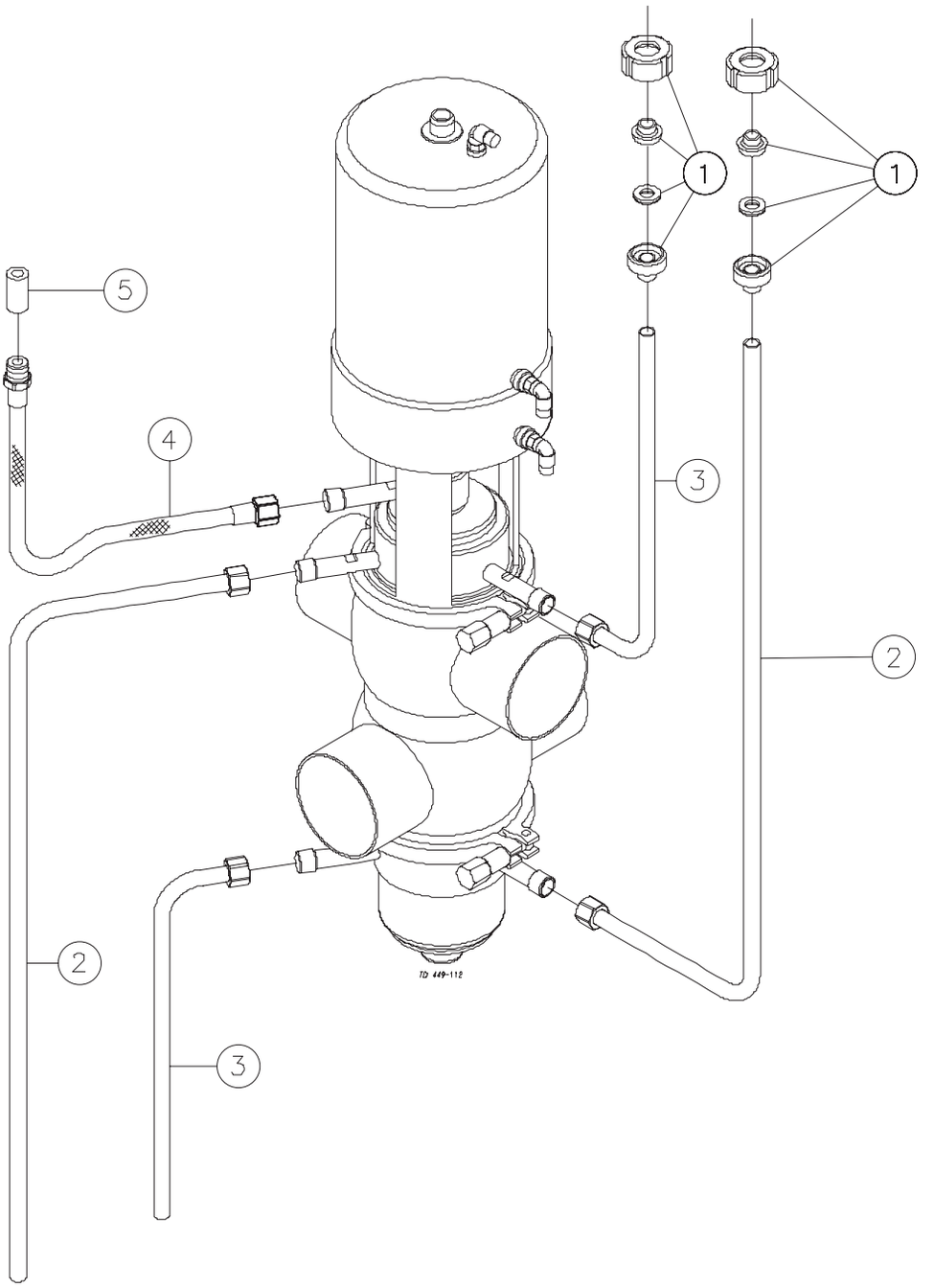

Installation Kit H

Pos	Qty	Denomination	
1	1	DIN union DN10	9611305791
	1	Nut, DN10	9611306420
	1	Welding liner DIN, DN10	9611305950
	1	Packing NBR, DN10	52734601
	1	Male part DIN, DN10	9611305900
2	1	12 mm CIP pipe long	3135710014
3	1	12 mm CIP pipe	3135710013

Installation Kit B

Pos	Qty	Denomination	
4	1	Hose PTFE w. s.s. weave	3135707451
5	1	Welding socket	9611990917

900-114/1

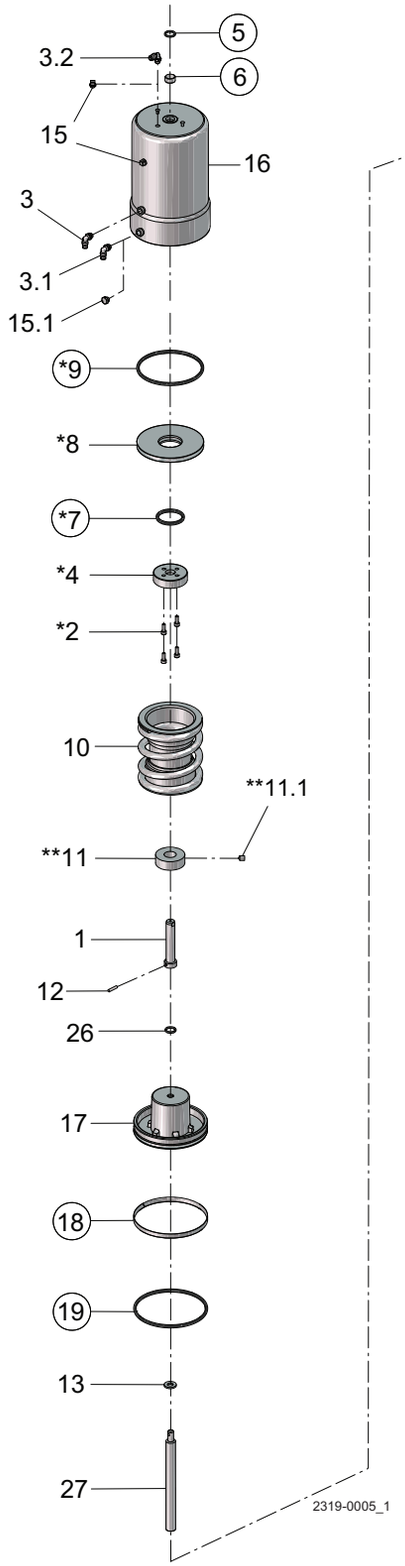

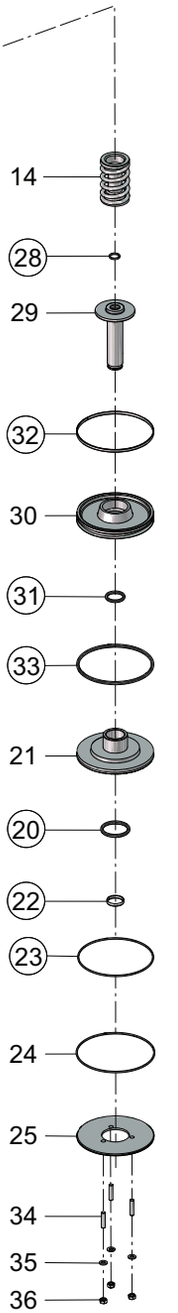

◯ = acuator service kit
* = not used in actuator 2”
** = not used in actuator 2½”, 3” and 4”

Pos		Qty	Denomination	DN/OD 51 DN 50 Seat ø53.3	DN/OD 63.5 DN 65 DN/OD 76.1 DN 80 Seat ø81.3	DN/OD 101.6 DN 100 Seat ø100.3
1		1	Upper stem	9613010102	9613007401	9613007402
2		4	Screw		9611993342	9611993342
3		1	Air fitting	9611991988	9611991988	9611991988
3.1		1	Air fitting	9611991988	9611991988	9611991988
3.2		1	Air fitting	9611991988	9611991988	9611991988
4		1	Stop for upper piston		9613005301	9613005302
5	□	1	O-ring, NBR	9611993499	9611993499	9611993499
6	□	1	Guide ring, Turcite	9613008408	9613008408	9613008408
7	□	1	O-ring, NBR		9611993514	9611993514
8		1	Upper piston		9613005601	9613005602
9	□	1	O-ring, NBR		9611993512	9611993513
10		1	Spring assembly	9613012501	9613007501	9613025603
11		1	Distance spacer	9613010202		
12		1	Pin	9611994197	9611994198	9611994199
13		1	Washer	9611993594	9611993595	9611993596
14		1	Spring assembly	9613013101	9613009502	9613009502
15		1	Plug	9613414101	9613414101	9613414101
15.1		1	Plug	9611993709	9611993709	9611993709
17		1	Main piston	9613013201	9613005701	9613015901
18	□	1	Guide ring, Turcite	9613008409	9613008410	9613008411
19	□	1	O-ring, NBR	9611993505	9611993507	9611993509
20	□	1	O-ring, NBR	9611993503	9611993607	9611993607
21		1	Bottom	9613014001	9613005401	9613016801
22	□	1	Guide ring, Turcite	9613008403	9613008404	9613008404
23	□	1	O-ring, NBR	9611992228	9611991489	22340675
24		1	Retaining ring	9613024802	9613024803	9613024804
25		1	Cover disk	9613005802	9613005803	9613005804
26		1	O-ring, NBR	9611993528	9611993495	9611993530
27		1	Inner stem	9613010602	9613007301	9613007302
28	□	1	O-ring	9611993495	9611990030	9611990030
29		1	Piston rod	9613013401	9613006001	9613006002
30		1	Lower piston	9613013801	9613005501	9613016601
31	□	1	O-ring, NBR	42153	42153	42153
32	□	1	Guide ring, Turcite	9613008405	9613008406	9613008407
33	□	1	O-ring, NBR	22341275	9611993508	9611993510
34		3	Bolt	9611993618	9611993618	9611993618
35		3	Washer	9611993594	9611993594	9611993594
36		3	Nut	9611990360	9611990360	9611990360
41		1	Flushing tube	3135710172	3135710172	3135710172
42		1	Spindle liner	9613011601	9613009001	9613009001
43		2	Clamp	9613011801	9613009201	9613009201
44		1	Lock	9613011701	9613009101	9613009101
Actuator service kits						
	□		Actuator service kits	9611926414	9611926415	9611926416

Parts marked with □ are included in the service kits.

Plug setup 23

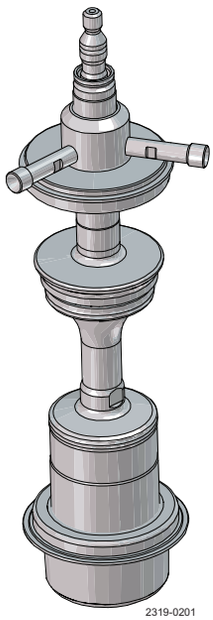

Upper: Unbalanced with CIP OD spindle
Lower: Balanced (blue bottom)
See page

Plug setup 25

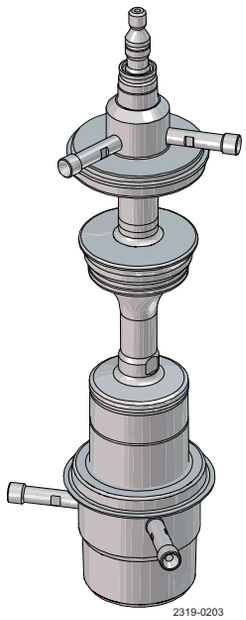

Upper: Unbalanced with CIP OD spindle
Lower: Balanced with CIP OD balancer (blue bottom)
See page

Plug setup

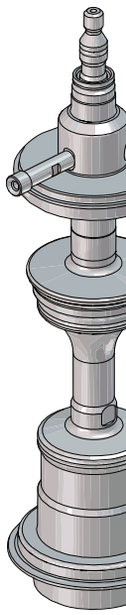

Upper: Un
CIP OD sp
Lower: Flu
(steel botto
See page

Plug setup 31

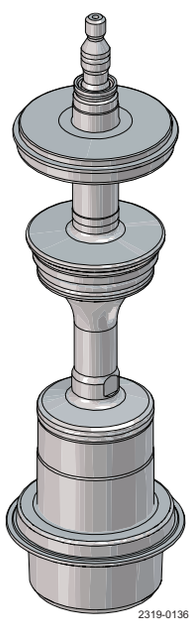

Upper: Unbalanced
Lower: Balanced (blue bottom)
See page

Plug setup 33

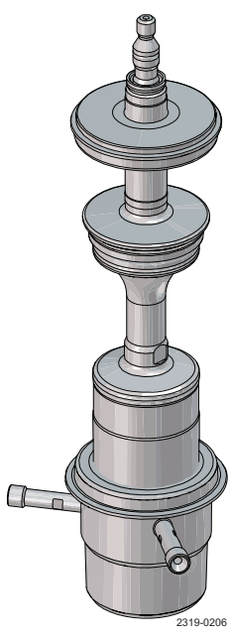

Upper: Unbalanced
Lower: Balanced with CIP OD balancer (blue bottom)
See page

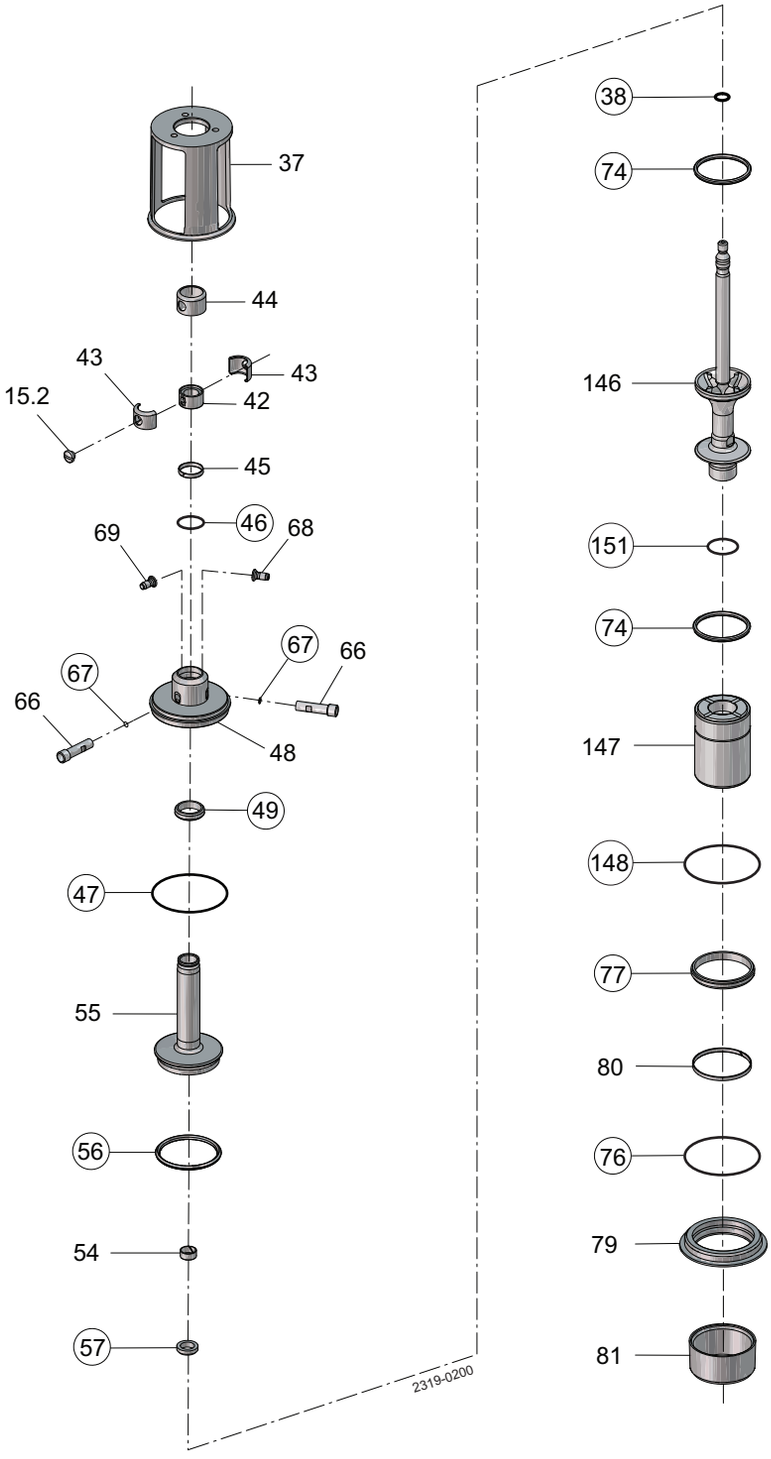

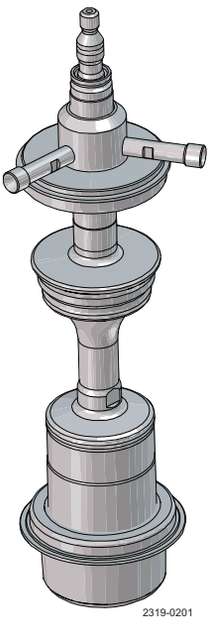

○ = wear parts

Pos. 37, see section
See note below service kits.

Pos		Qty	Denomination	DN/OD 51 DN 50 seat ø53.3	DN/OD 63.5 DN 65 seat ø81.3	DN/OD 76.1 seat ø81.3	DN 80 seat ø81.3	DN/OD 101.6 DN 100 seat ø100.3
Spindle liner								
15		1	Plug	9613414101	9613414101	9613414101	9613414101	9613414101
42		1	Spindle liner	9613011601	9613009001	9613009001	9613009001	9613009001
43		2	Clamp	9613011801	9613009201	9613009201	9613009201	9613009201
44		1	Lock	9613011701	9613009101	9613009101	9613009101	9613009101
Upper sealing element								
45		1	Guide ring, PTFE	9613008416	9613008417	9613008417	9613008417	9613008417
46	□	1	O-ring, EPDM	9611993653	9611993654	9611993654	9611993654	9611993654
47	□	1	O-ring, EPDM	9611993632	9611993636	9611993636	9611993636	9611993640
	□	1	O-ring, NBR	9611993633	9611993637	9611993637	9611993637	9611993641
	□	1	O-ring, FPM	9611993634	9611993638	9611993638	9611993638	9611993642
	□	1	O-ring, HNBR	9611993635	9611993639	9611993639	9611993639	9611993643
48		1	Upper sealing element	9613014301	9613006501	9613006501	9613006501	9613018901
49	□	1	Lip seal, EPDM	9613008501	9613008511	9613008511	9613008511	9613008511
	□	1	Lip seal, NBR	9613008502	9613008512	9613008512	9613008512	9613008512
	□	1	Lip seal, FPM	9613008503	9613008513	9613008513	9613008513	9613008513
	□	1	Lip seal, HNBR	9613008504	9613008514	9613008514	9613008514	9613008514
66		2	Flushing tube	9613007902	9613007903	9613007903	9613007903	9613007904
67	□	2	O-ring, EPDM	9611993119	9611993119	9611993119	9611993119	9611993119
68		1	Drain	9613008001	9613008001	9613008001	9613008001	9613008001
69		1	Nozzle	9613008002	9613008002	9613008002	9613008002	9613008002
Upper plug								
54		1	Guide ring, PTFE	9613008401	9613008402	9613008402	9613008402	9613008402
55		1	Upper plug	9613016202	9613008202	9613008202	9613008202	9613091402
56	□	1	Seal ring, EPDM	9613095106	9613095109	9613095109	9613095109	9613095119
	□	1	Seal ring, NBR	9613095114	9613095115	9613095115	9613095115	9613095120
	□	1	Seal ring, FPM	9613095105	9613095108	9613095108	9613095108	9613095118
	□	1	Seal ring, HNBR	9613095104	9613095107	9613095107	9613095107	9613095117
57	□	1	Lip seal, EPDM	9613008706	9613008711	9613008711	9613008711	9613008711
	□	1	Lip seal, NBR	9613008707	9613008712	9613008712	9613008712	9613008712
	□	1	Lip seal, FPM	9613008708	9613008713	9613008713	9613008713	9613008713
	□	1	Lip seal, HNBR	9613008709	9613008714	9613008714	9613008714	9613008714
Lower plug								
38	□	1	O-ring, EPDM	9611993555	9611993572	9611993572	9611993572	9611993572
74	□	2	Seal ring, EPDM	9613095206	9613095209	9613095209	9613095209	9613095219
	□	2	Seal ring, NBR	9613095214	9613095215	9613095215	9613095215	9613095220
	□	2	Seal ring, FPM - Alfa Laval recommends EPDM	9613095205	9613095208	9613095208	9613095208	9613095218
	□	2	Seal ring, HNBR	9613095204	9613095207	9613095207	9613095207	9613095217
146		1	Lower plug, upper part	9615369602	9615370002	9615370004	9615370006	9615370402
147		1	Balancer	9615369401	9615369801	9615369803	9615369805	9615370201
150		1	Lower plug, complete (Pos. 146 + 147)	9615370503	9615370603	9615370607	9615370611	9615370703
151	□	1	O-ring	8010000125	8010000126	8010000126	8010000126	8010000127
148	□	1	O-ring, EPDM	9611993632	9611993636	9611993636	9611993636	9611993640
	□	1	O-ring, NBR	9611993633	9611993637	9611993637	9611993637	9611993641
	□	1	O-ring, FPM	9611993634	9611993638	9611993638	9611993638	9611993642
	□	1	O-ring, HNBR	9611993635	9611993639	9611993639	9611993639	9611993643
Lower sealing element								
76	□	1	O-ring, EPDM	9611993632	9611993636	9611993636	9611993636	9611993640
	□	1	O-ring, NBR	9611993633	9611993637	9611993637	9611993637	9611993641
	□	1	O-ring, FPM	9611993634	9611993638	9611993638	9611993638	9611993642
	□	1	O-ring, HNBR	9611993635	9611993639	9611993639	9611993639	9611993643
77	□	1	Lip seal, EPDM	9613008521	9613008526	9613008526	9613008526	9613008548
	□	1	Lip seal, NBR	9613008522	9613008527	9613008527	9613008527	9613008549
	□	1	Lip seal, FPM	9613008523	9613008528	9613008528	9613008528	9613008550
	□	1	Lip seal, HNBR	9613008524	9613008529	9613008529	9613008529	9613008551
79		1	Lower sealing element	9613023902	9613024102	9613024102	9613024102	9613066201
80		1	Guide ring, PTFE	9613008413	9613008414	9613008414	9613008414	9613008420
81		1	Cover	9613049005	9613049006	9613049006	9613049006	9613049015

Pos. 37, see section

See note below service kits.

1.7

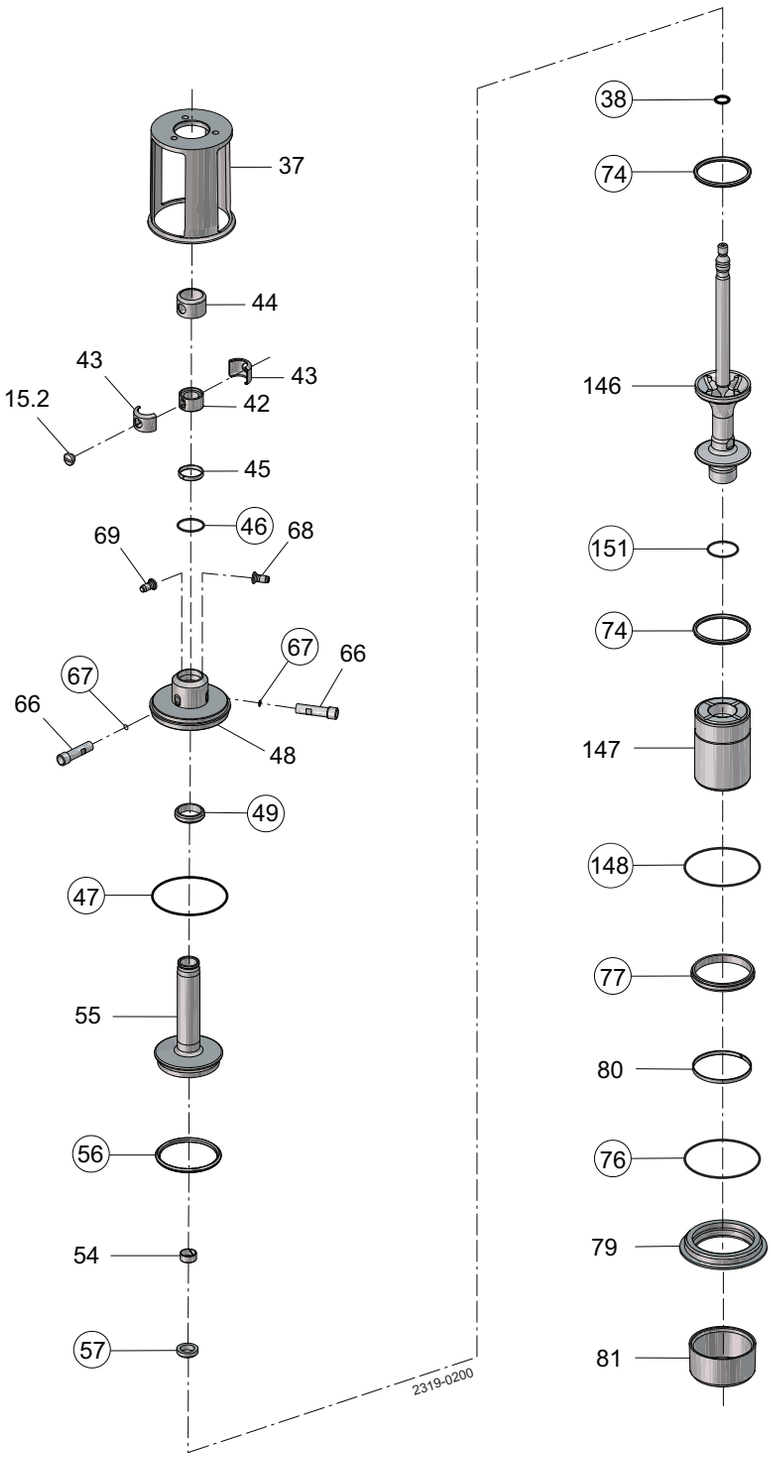

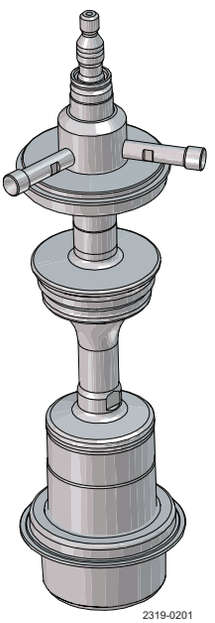

◯ = wear parts

Pos. 37, see section
See note below service kits.

		DN/OD 51 DN 50 seat ø53.3	DN/OD 63.5 DN 65 seat ø81.3	DN/OD 76.1 seat ø81.3	DN 80 seat ø81.3	DN/OD 101.6 DN 100 seat ø100.3
Service kits						
□	**Service kit, EPDM**	9611928381	9611928382	9611928382	9611928382	9611928383
□	**Service kit, NBR**	9611928384	9611928385	9611928385	9611928385	9611928386
□	**Service kit, FPM**	9611928387	9611928388	9611928388	9611928388	9611928389
□	**Service kit, HNBR**	9611928390	9611928391	9611928391	9611928391	9611928392

Parts marked with □ are included in the service kit.

NOTE!
If SpiralClean in leakage chamber extra O-rings (2 x pos. 39 and 1 x pos. 40) is required.
All FPM service kits are supplied with EPDM seal ring, pos. 74.

900713/1

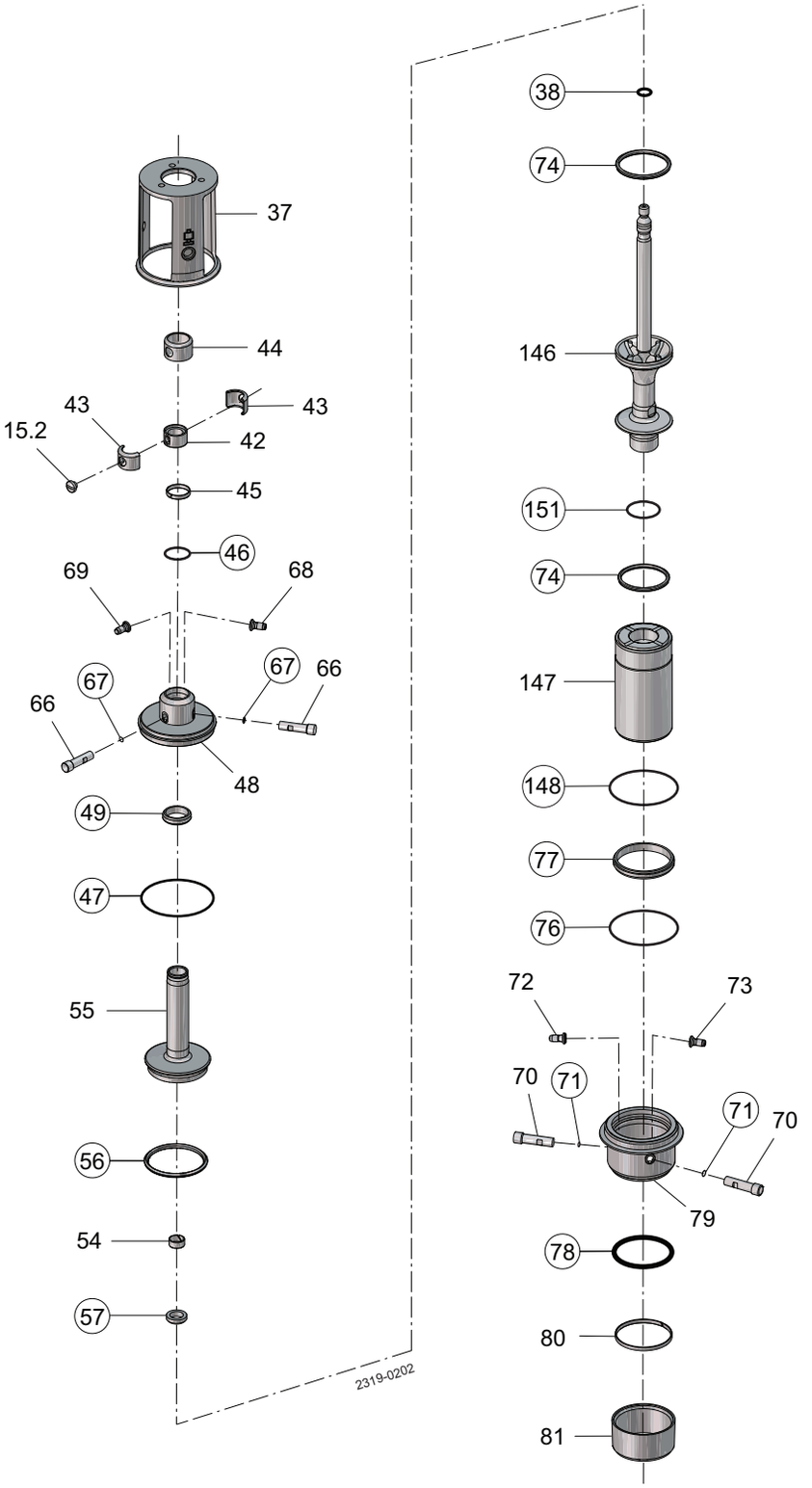

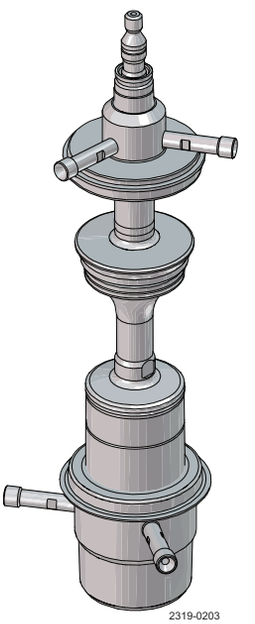

◯ = wear parts

Pos. 37, see section
See note below service kits.

Pos		Qty	Denomination	DN/OD 51 DN 50 seat ø53.3	DN/OD63.5 DN65 seat ø81.3	DN/OD 76.1 seat ø81.3	DN 80 seat ø81.3	DN/OD 101.6 DN 100 seat ø100.3
Spindle liner								
15		1	Plug	9613414101	9613414101	9613414101	9613414101	9613414101
42		1	Spindle liner	9613011601	9613009001	9613009001	9613009001	9613009001
43		2	Clamp	9613011801	9613009201	9613009201	9613009201	9613009201
44		1	Lock	9613011701	9613009101	9613009101	9613009101	9613009101
Upper sealing element								
45		1	Guide ring	9613008416	9613008417	9613008417	9613008417	9613008417
46	□	1	O-ring, EPDM	9611993653	9611993654	9611993654	9611993654	9611993654
47	□	1	O-ring, EPDM	9611993632	9611993636	9611993636	9611993636	9611993640
	□	1	O-ring, NBR	9611993633	9611993637	9611993637	9611993637	9611993641
	□	1	O-ring, FPM	9611993634	9611993638	9611993638	9611993638	9611993642
	□	1	O-ring, HNBR	9611993635	9611993639	9611993639	9611993639	9611993643
48		1	Upper sealing element	9613014301	9613006501	9613006501	9613006501	9613018901
49	□	1	Lip seal, EPDM	9613008501	9613008511	9613008511	9613008511	9613008511
	□	1	Lip seal, NBR	9613008502	9613008512	9613008512	9613008512	9613008512
	□	1	Lip seal, FPM	9613008503	9613008513	9613008513	9613008513	9613008513
	□	1	Lip seal, HNBR	9613008504	9613008514	9613008514	9613008514	9613008514
66		2	Flushing tube	9613007902	9613007903	9613007903	9613007903	9613007904
67	□	2	O-ring, EPDM	9611993119	9611993119	9611993119	9611993119	9611993119
68		1	Drain	9613008001	9613008001	9613008001	9613008001	9613008001
69		1	Nozzle	9613008002	9613008002	9613008002	9613008002	9613008002
Upper plug								
54		1	Guide ring, PTFE	9613008401	9613008402	9613008402	9613008402	9613008402
55		1	Upper plug	9613016202	9613008202	9613008202	9613008202	9613091402
56	□	1	Seal ring, EPDM	9613095106	9613095109	9613095109	9613095109	9613095119
	□	1	Seal ring, NBR	9613095114	9613095115	9613095115	9613095115	9613095120
	□	1	Seal ring, FPM	9613095105	9613095108	9613095108	9613095108	9613095118
	□	1	Seal ring, HNBR	9613095104	9613095107	9613095107	9613095107	9613095117
57	□	1	Lip seal, EPDM	9613008706	9613008711	9613008711	9613008711	9613008711
	□	1	Lip seal, NBR	9613008707	9613008712	9613008712	9613008712	9613008712
	□	1	Lip seal, FPM	9613008708	9613008713	9613008713	9613008713	9613008713
	□	1	Lip seal, HNBR	9613008709	9613008714	9613008714	9613008714	9613008714

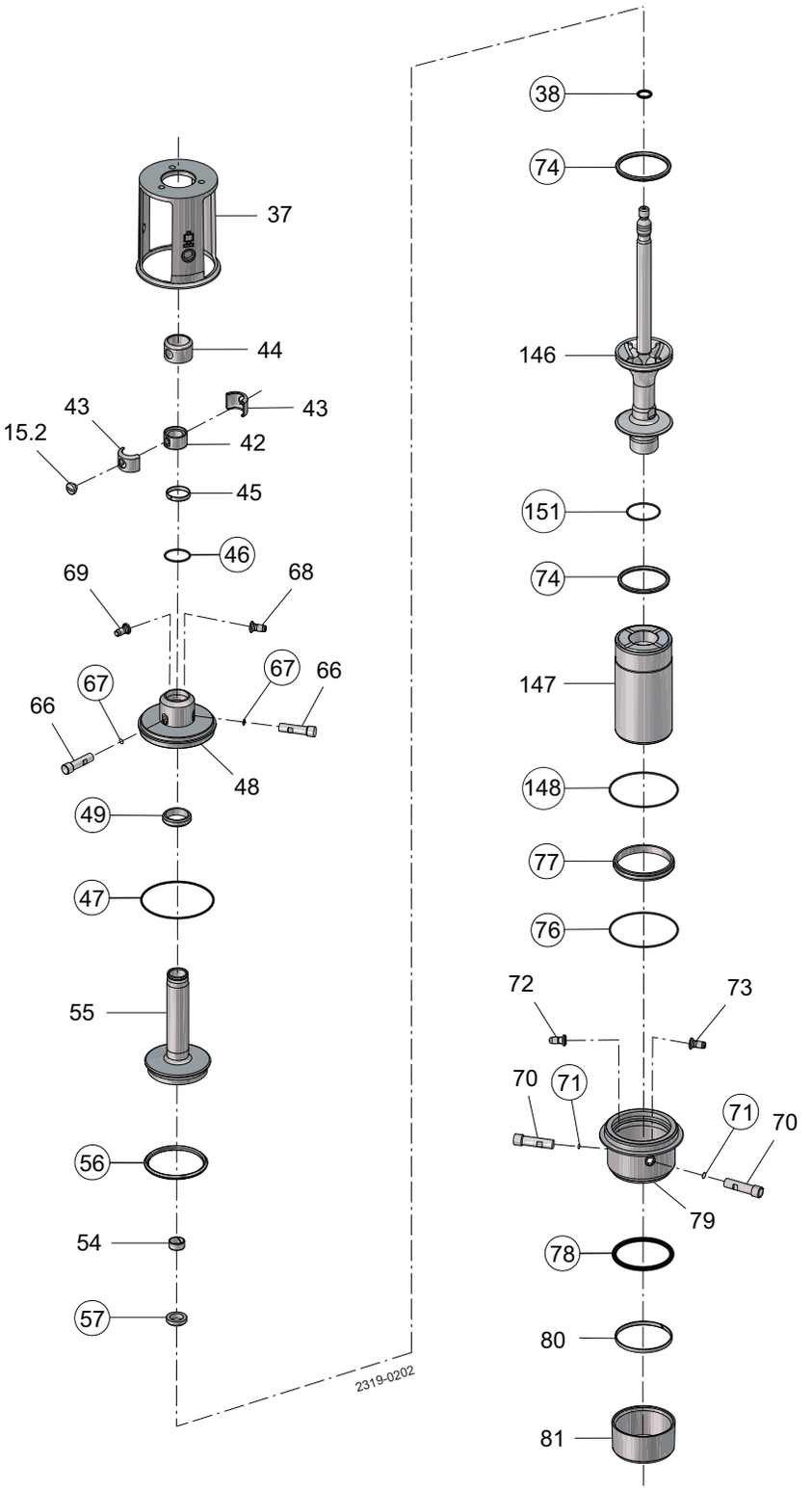

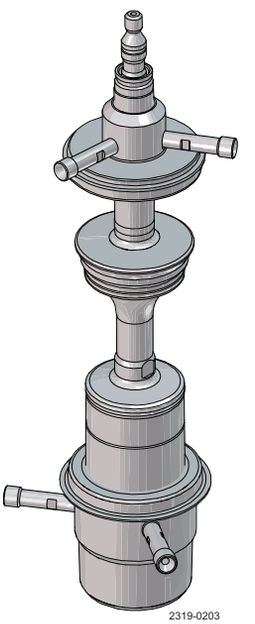

◯ = wear parts

Pos. 37, see section
See note below service kits.

Pos		Qty	Denomination	DN/OD 51 DN 50 seat ø53.3	DN/OD63.5 DN65 seat ø81.3	DN/OD 76.1 seat ø81.3	DN 80 seat ø81.3	DN/OD 101.6 DN 100 seat ø100.3
Lower plug								
38	□	1	O-ring, EPDM	9611993555	9611993572	9611993572	9611993572	9611993572
74		2	Seal ring, EPDM	9613095206	9613095209	9613095209	9613095209	9613095219
	□	2	Seal ring, NBR	9613095214	9613095215	9613095215	9613095215	9613095220
	□	2	Seal ring, FPM - Alfa Laval recommends EPDM	9613095205	9613095208	9613095208	9613095208	9613095218
	□	2	Seal ring, HNBR	9613095204	9613095207	9613095207	9613095207	9613095217
146		1	Lower plug, upper part	9615369602	9615370002	9615370004	9615370006	9615370402
147		1	Balancer	9615369402	9615369802	9615369804	9615369806	9615370202
150		1	Lower plug, complete (Pos. 146 + 147)	9615370504	9615370604	9615370608	9615370612	9615370704
151	□	1	O-ring	8010000125	8010000126	8010000126	8010000126	8010000127
148	□	1	O-ring, EPDM	9611993632	9611993636	9611993636	9611993636	9611993640
	□	1	O-ring, NBR	9611993633	9611993637	9611993637	9611993637	9611993641
	□	1	O-ring, FPM	9611993634	9611993638	9611993638	9611993638	9611993642
	□	1	O-ring, HNBR	9611993635	9611993639	9611993639	9611993639	9611993643
Lower sealing element								
70		2	Flushing tube	9613007902	9613007903	9613007903	9613007903	9613007904
71	□	2	O-ring, EPDM	9611993119	9611993119	9611993119	9611993119	9611993119
72		1	Drain	9613008001	9613008001	9613008001	9613008001	9613008001
73		1	Nozzle	9613008002	9613008002	9613008002	9613008002	9613008002
76	□	1	O-ring, EPDM	9611993632	9611993636	9611993636	9611993636	9611993640
	□	1	O-ring, NBR	9611993633	9611993637	9611993637	9611993637	9611993641
	□	1	O-ring, FPM	9611993634	9611993638	9611993638	9611993638	9611993642
	□	1	O-ring, HNBR	9611993635	9611993639	9611993639	9611993639	9611993643
77	□	1	Lip seal, EPDM	9613008521	9613008526	9613008526	9613008526	9613008548
	□	1	Lip seal, NBR	9613008522	9613008527	9613008527	9613008527	9613008549
	□	1	Lip seal, FPM	9613008523	9613008528	9613008528	9613008528	9613008550
	□	1	Lip seal, HNBR	9613008524	9613008529	9613008529	9613008529	9613008551
78	□	1	O-ring, EPDM	9611993650	9611993651	9611993651	9611993651	9611994407
79		1	Lower sealing element	9613049501	9613049601	9613049601	9613049601	9613066101
80		1	Guide ring, PTFE	9613008413	9613008414	9613008414	9613008414	9613008420
81		1	Cover	9613049005	9613049006	9613049006	9613049006	9613049015

Pos. 37, see section

See note below service kits.

		DN/OD 51 DN 50 seat ø53.3	DN/OD63.5 DN65 seat ø81.3	DN/OD 76.1 seat ø81.3	DN 80 seat ø81.3	DN/OD 101.6 DN 100 seat ø100.3
Service kits						
□	**Service kit, EPDM**	**9611928405**	**9611928406**	**9611928406**	**9611928406**	**9611928407**
□	**Service kit, NBR**	**9611928408**	**9611928409**	**9611928409**	**9611928409**	**9611928410**
□	**Service kit, FPM**	**9611928411**	**9611928412**	**9611928412**	**9611928412**	**9611928413**
□	**Service kit, HNBR**	**9611928414**	**9611928415**	**9611928415**	**9611928415**	**9611928416**

Parts marked with □ are included in the service kit.

NOTE!

If SpiralClean in leakage chamber extra O-rings (2 x pos. 39 and 1 x pos. 40) is required.

All FPM service kits are supplied with EPDM seal ring, pos. 74.

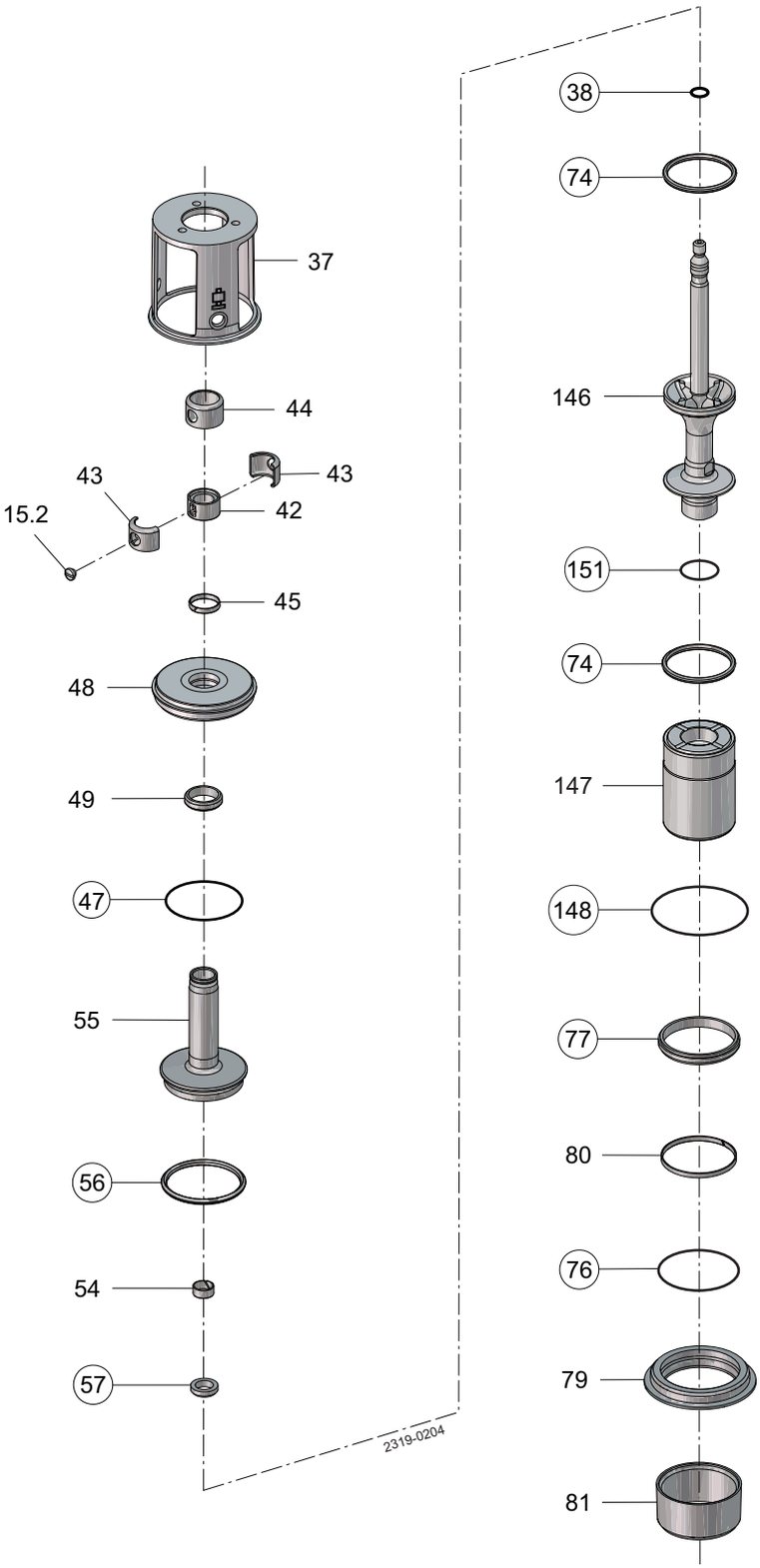

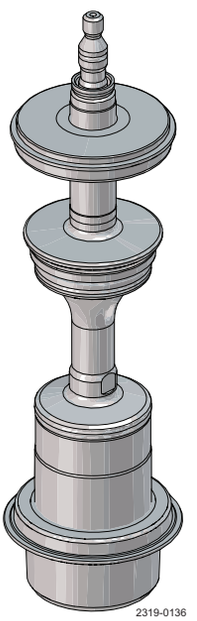

◯ = wear parts
Pos. 37, see section
See note below service kits.

Pos		Qty	Denomination	DN/OD 51 DN 50 seat ø53.3	DN/OD 63.5 DN 65 seat ø81.3	DN/OD 76.1 seat ø81.3	DN 80 seat ø81.3	DN/OD 101.6 DN 100 seat ø100.3
Spindle liner								
15		1	Plug	9613414101	9613414101	9613414101	9613414101	9613414101
42		1	Spindle liner	9613011601	9613009001	9613009001	9613009001	9613009001
43		2	Clamp	9613011801	9613009201	9613009201	9613009201	9613009201
44		1	Lock	9613011701	9613009101	9613009101	9613009101	9613009101
Upper sealing element								
45		1	Guide ring, PTFE	9613008416	9613008417	9613008417	9613008417	9613008417
47	□	1	O-ring, EPDM	9611993632	9611993636	9611993636	9611993636	9611993640
	□	1	O-ring, NBR	9611993633	9611993637	9611993637	9611993637	9611993641
	□	1	O-ring, FPM	9611993634	9611993638	9611993638	9611993638	9611993642
	□	1	O-ring, HNBR	9611993635	9611993639	9611993639	9611993639	9611993643
48		1	Upper sealing element	9613014201	9613006401	9613006401	9613006401	9613018801
49	□	1	Lip seal, EPDM	9613008501	9613008511	9613008511	9613008511	9613008511
	□	1	Lip seal, NBR	9613008502	9613008512	9613008512	9613008512	9613008512
	□	1	Lip seal, FPM	9613008503	9613008513	9613008513	9613008513	9613008513
	□	1	Lip seal, HNBR	9613008504	9613008514	9613008514	9613008514	9613008514
Upper plug								
54		1	Guide ring, PTFE	9613008401	9613008402	9613008402	9613008402	9613008402
55		1	Upper plug	9613016201	9613008201	9613008201	9613008201	9613091401
56	□	1	Seal ring, EPDM	9613095106	9613095109	9613095109	9613095109	9613095119
	□	1	Seal ring, NBR	9613095114	9613095115	9613095115	9613095115	9613095120
	□	1	Seal ring, FPM	9613095105	9613095108	9613095108	9613095108	9613095118
	□	1	Seal ring, HNBR	9613095104	9613095107	9613095107	9613095107	9613095117
57	□	1	Lip seal, EPDM	9613008706	9613008711	9613008711	9613008711	9613008711
	□	1	Lip seal, NBR	9613008707	9613008712	9613008712	9613008712	9613008712
	□	1	Lip seal, FPM	9613008708	9613008713	9613008713	9613008713	9613008713
	□	1	Lip seal, HNBR	9613008709	9613008714	9613008714	9613008714	9613008714
Lower plug								
38	□	1	O-ring, EPDM	9611993555	9611993572	9611993572	9611993572	9611993572
74	□	2	Seal ring, EPDM	9613095206	9613095209	9613095209	9613095209	9613095219
	□	2	Seal ring, NBR	9613095214	9613095215	9613095215	9613095215	9613095220
	□	2	Seal ring, FPM - Alfa Laval recommends EPDM	9613095205	9613095208	9613095208	9613095208	9613095218
	□	2	Seal ring, HNBR	9613095204	9613095207	9613095207	9613095207	9613095217
146		1	Lower plug, upper part	9615369601	9615370001	9615370003	9615370005	9615370401
147		1	Balancer	9615369401	9615369801	9615369803	9615369805	9615370201
150		1	Lower plug, complete (Pos. 146 + 147)	9615370501	9615370601	9615370605	9615370609	9615370701
151	□	1	O-ring	8010000125	8010000126	8010000126	8010000126	8010000127
148	□	1	O-ring, EPDM	9611993632	9611993636	9611993636	9611993636	9611993640
	□	1	O-ring, NBR	9611993633	9611993637	9611993637	9611993637	9611993641
	□	1	O-ring, FPM	9611993634	9611993638	9611993638	9611993638	9611993642
	□	1	O-ring, HNBR	9611993635	9611993639	9611993639	9611993639	9611993643
Lower sealing element								
76	□	1	O-ring, EPDM	9611993632	9611993636	9611993636	9611993636	9611993640
	□	1	O-ring, NBR	9611993633	9611993637	9611993637	9611993637	9611993641
	□	1	O-ring, FPM	9611993634	9611993638	9611993638	9611993638	9611993642
	□	1	O-ring, HNBR	9611993635	9611993639	9611993639	9611993639	9611993643
77	□	1	Lip seal, EPDM	9613008521	9613008526	9613008526	9613008526	9613008548
	□	1	Lip seal, NBR	9613008522	9613008527	9613008527	9613008527	9613008549
	□	1	Lip seal, FPM	9613008523	9613008528	9613008528	9613008528	9613008550
	□	1	Lip seal, HNBR	9613008524	9613008529	9613008529	9613008529	9613008551
79		1	Lower sealing element	9613023902	9613024102	9613024102	9613024102	9613066201
80		1	Guide ring, PTFE	9613008413	9613008414	9613008414	9613008414	9613008420
81		1	Cover	9613049005	9613049006	9613049006	9613049006	9613049015

Pos. 37, see section

See note below service kits.

1.7

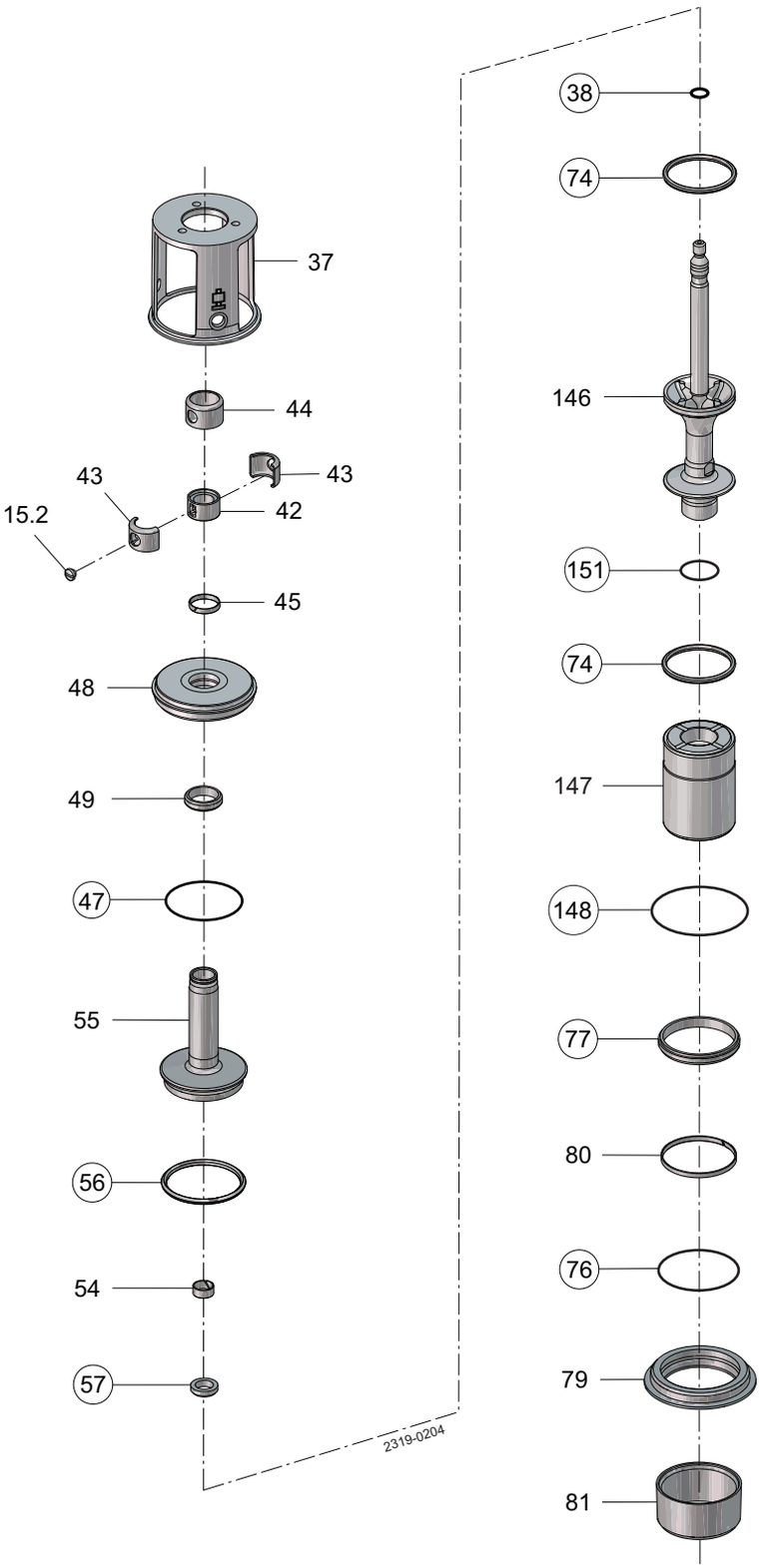

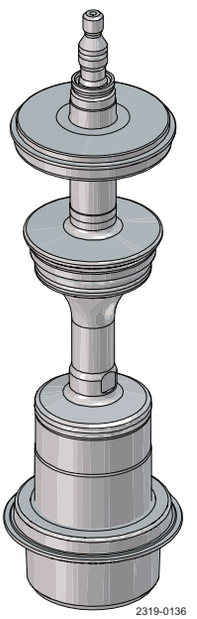

◯ = wear parts

Pos. 37, see section
See note below service kits.

		DN/OD 51 DN 50 seat ø53.3	DN/OD 63.5 DN 65 seat ø81.3	DN/OD 76.1 seat ø81.3	DN 80 seat ø81.3	DN/OD 101.6 DN 100 seat ø100.3
Service kits						
□	Service kit, EPDM	9611928453	9611928454	9611928454	9611928454	9611928455
□	Service kit, NBR	9611928456	9611928457	9611928457	9611928457	9611928458
□	Service kit, FPM	9611928354	9611928355	9611928355	9611928355	9611928356
□	Service kit, HNBR	9611928459	9611928460	9611928460	9611928460	9611928461

Parts marked with □ are included in the service kit.

NOTE!
If SpiralClean in leakage chamber extra O-rings (2 x pos. 39 and 1 x pos. 40) is required.
All FPM service kits are supplied with EPDM seal ring, pos. 74

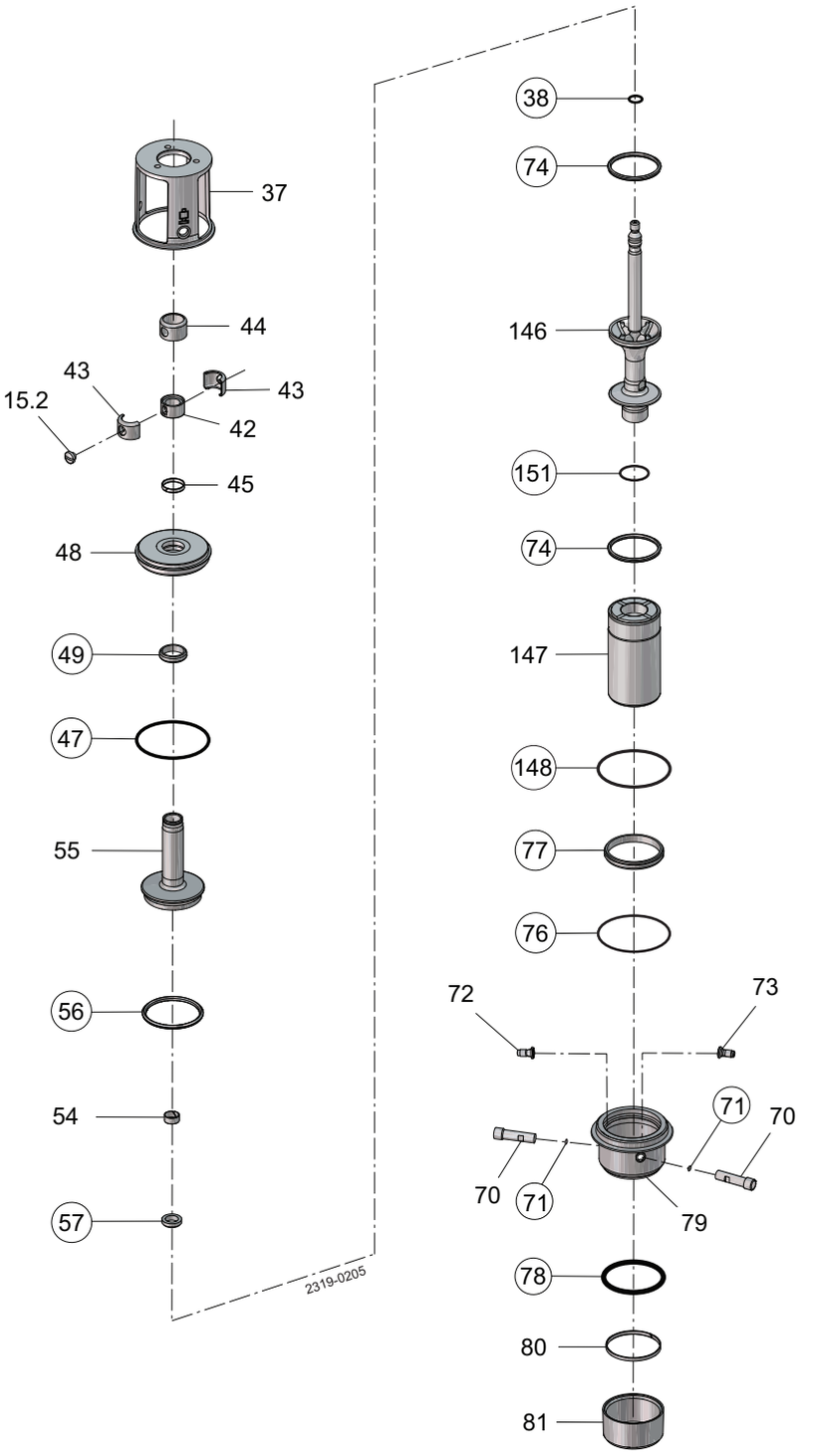

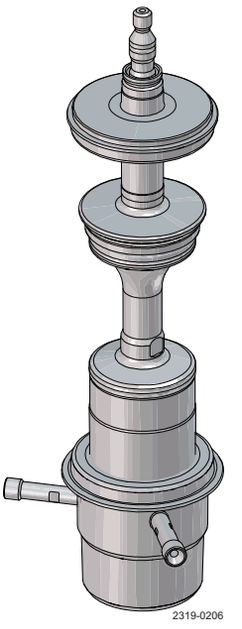

○ = wear parts

Pos. 37, see section
See note below service kits.

Pos		Qty	Denomination	DN/OD 51 DN 50 seat ø53.3	DN/OD 63.5 DN 65 seat ø81.3	DN/OD 76.1 seat ø81.3	DN 80 seat ø81.3	DN/OD 101.6 DN 100 seat ø100.3
Spindle liner								
15		1	Plug	9613414101	9613414101	9613414101	9613414101	9613414101
42		1	Spindle liner	9613011601	9613009001	9613009001	9613009001	9613009001
43		2	Clamp	9613011801	9613009201	9613009201	9613009201	9613009201
44		1	Lock	9613011701	9613009101	9613009101	9613009101	9613009101
Upper sealing element								
45		1	Guide ring, PTFE	9613008416	9613008417	9613008417	9613008417	9613008417
47	□	1	O-ring, EPDM	9611993632	9611993636	9611993636	9611993636	9611993640
	□	1	O-ring, NBR	9611993633	9611993637	9611993637	9611993637	9611993641
	□	1	O-ring, FPM	9611993634	9611993638	9611993638	9611993638	9611993642
	□	1	O-ring, HNBR	9611993635	9611993639	9611993639	9611993639	9611993643
48		1	Upper sealing element	9613014201	9613006401	9613006401	9613006401	9613018801
49	□	1	Lip seal, EPDM	9613008501	9613008511	9613008511	9613008511	9613008511
	□	1	Lip seal, NBR	9613008502	9613008512	9613008512	9613008512	9613008512
	□	1	Lip seal, FPM	9613008503	9613008513	9613008513	9613008513	9613008513
	□	1	Lip seal, HNBR	9613008504	9613008514	9613008514	9613008514	9613008514
Upper plug								
54		1	Guide ring, PTFE	9613008401	9613008402	9613008402	9613008402	9613008402
55		1	Upper plug	9613016201	9613008201	9613008201	9613008201	9613091401
56	□	1	Seal ring, EPDM	9613095106	9613095109	9613095109	9613095109	9613095119
	□	1	Seal ring, NBR	9613095114	9613095115	9613095115	9613095115	9613095120
	□	1	Seal ring, FPM	9613095105	9613095108	9613095108	9613095108	9613095118
	□	1	Seal ring, HNBR	9613095104	9613095107	9613095107	9613095107	9613095117
57	□	1	Lip seal, EPDM	9613008706	9613008711	9613008711	9613008711	9613008711
	□	1	Lip seal, NBR	9613008707	9613008712	9613008712	9613008712	9613008712
	□	1	Lip seal, FPM	9613008708	9613008713	9613008713	9613008713	9613008713
	□	1	Lip seal, HNBR	9613008709	9613008714	9613008714	9613008714	9613008714
Lower plug								
38	□	1	O-ring, EPDM	9611993555	9611993572	9611993572	9611993572	9611993572
74	□	2	Seal ring, EPDM	9613095206	9613095209	9613095209	9613095209	9613095219
	□	2	Seal ring, NBR	9613095214	9613095215	9613095215	9613095215	9613095220
	□	2	Seal ring, FPM - Alfa Laval recommends EPDM	9613095205	9613095208	9613095208	9613095208	9613095218
	□	2	Seal ring, HNBR	9613095204	9613095207	9613095207	9613095207	9613095217
146		1	Lower plug, upper part	9615369601	9615370001	9615370003	9615370005	9615370401
147		1	Balancer	9615369402	9615369802	9615369804	9615369806	9615370202
150		1	Lower plug, complete (Pos. 146 + 147)	9615370502	9615370602	9615370606	9615370610	9615370702
151	□	1	O-ring	8010000125	8010000126	8010000126	8010000126	8010000127
148	□	1	O-ring, EPDM	9611993632	9611993636	9611993636	9611993636	9611993640
	□	1	O-ring, NBR	9611993633	9611993637	9611993637	9611993637	9611993641
	□	1	O-ring, FPM	9611993634	9611993638	9611993638	9611993638	9611993642
	□	1	O-ring, HNBR	9611993635	9611993639	9611993639	9611993639	9611993643
Lower sealing element								
70		2	Flushing tube	9613007902	9613007903	9613007903	9613007903	9613007904
71	□	2	O-ring, EPDM	9611993119	9611993119	9611993119	9611993119	9611993119
72		1	Drain	9613008001	9613008001	9613008001	9613008001	9613008001
73		1	Nozzle	9613008002	9613008002	9613008002	9613008002	9613008002
76	□	1	O-ring, EPDM	9611993632	9611993636	9611993636	9611993636	9611993640
	□	1	O-ring, NBR	9611993633	9611993637	9611993637	9611993637	9611993641
	□	1	O-ring, FPM	9611993634	9611993638	9611993638	9611993638	9611993642
	□	1	O-ring, HNBR	9611993635	9611993639	9611993639	9611993639	9611993643
77	□	1	Lip seal, EPDM	9613008521	9613008526	9613008526	9613008526	9613008548
	□	1	Lip seal, NBR	9613008522	9613008527	9613008527	9613008527	9613008549
	□	1	Lip seal, FPM	9613008523	9613008528	9613008528	9613008528	9613008550
	□	1	Lip seal, HNBR	9613008524	9613008529	9613008529	9613008529	9613008551
78	□	1	O-ring, EPDM	9611993650	9611993651	9611993651	9611993651	9611994407
79		1	Lower sealing element	9613049501	9613049601	9613049601	9613049601	9613066101
80		1	Guide ring, PTFE	9613008413	9613008414	9613008414	9613008414	9613008420
81		1	Cover	9613049005	9613049006	9613049006	9613049006	9613049015

Pos. 37, see section

See note below service kits.

1.7

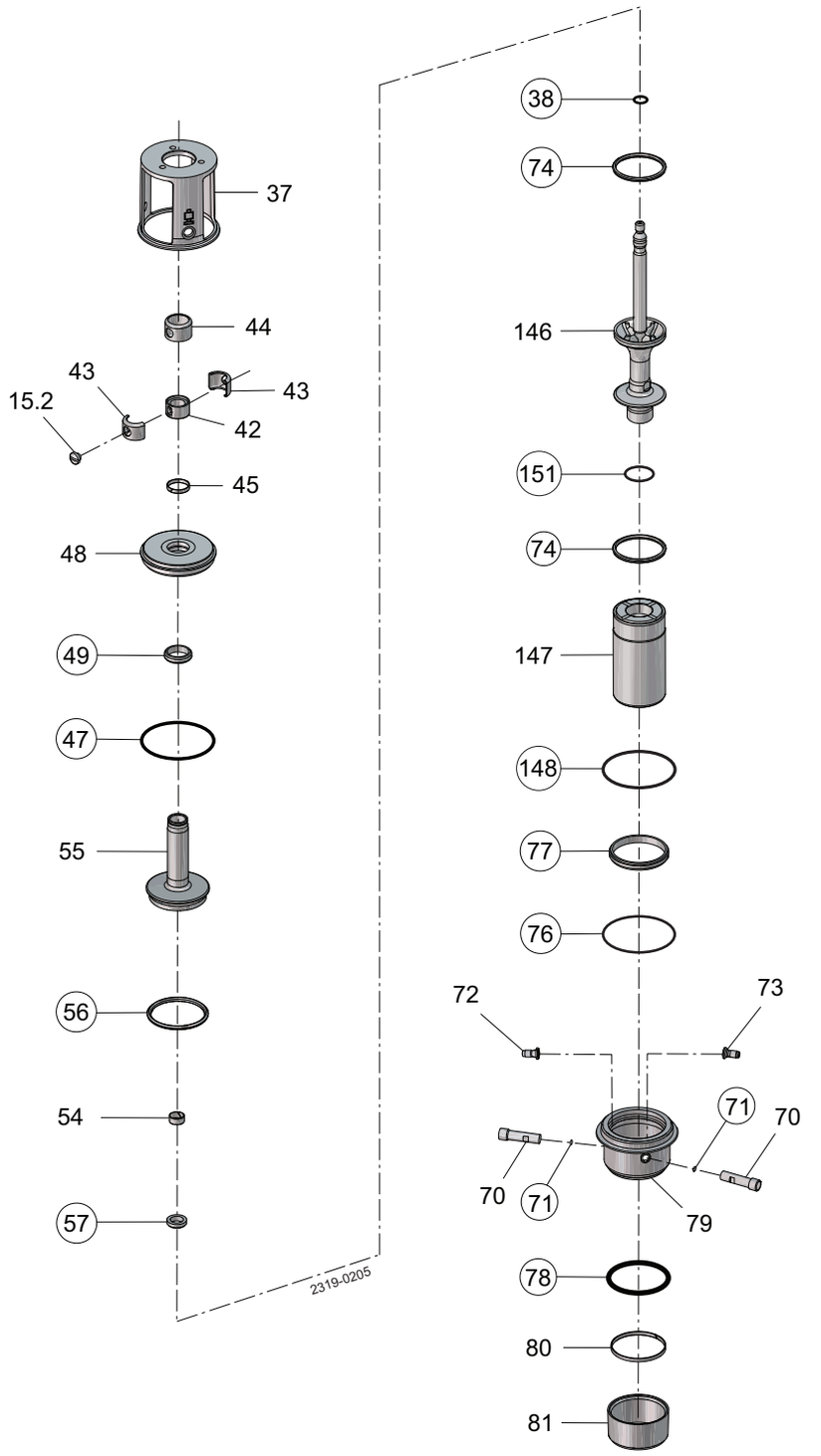

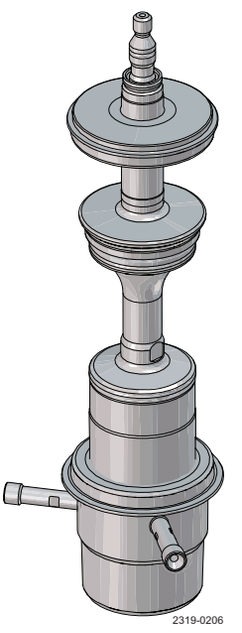

◯ = wear parts

Pos. 37, see section
See note below service kits.

		DN/OD 51 DN 50 seat ø53.3	DN/OD 63.5 DN 65 seat ø81.3	DN/OD 76.1 seat ø81.3	DN 80 seat ø81.3	DN/OD 101.6 DN 100 seat ø100.3
Service kits						
□	Service kit, EPDM	9611928369	9611928370	9611928370	9611928370	9611928371
□	Service kit, NBR	9611928372	9611928373	9611928373	9611928373	9611928374
□	Service kit, FPM	9611928375	9611928376	9611928376	9611928376	9611928377
□	Service kit, HNBR	9611928378	9611928379	9611928379	9611928379	9611928380

Parts marked with □ are included in the service kit.

NOTE!
If SpiralClean in leakage chamber extra O-rings (2 x pos. 39 and 1 x pos. 40) is required.
All FPM service kits are supplied with EPDM seal ring, pos. 74

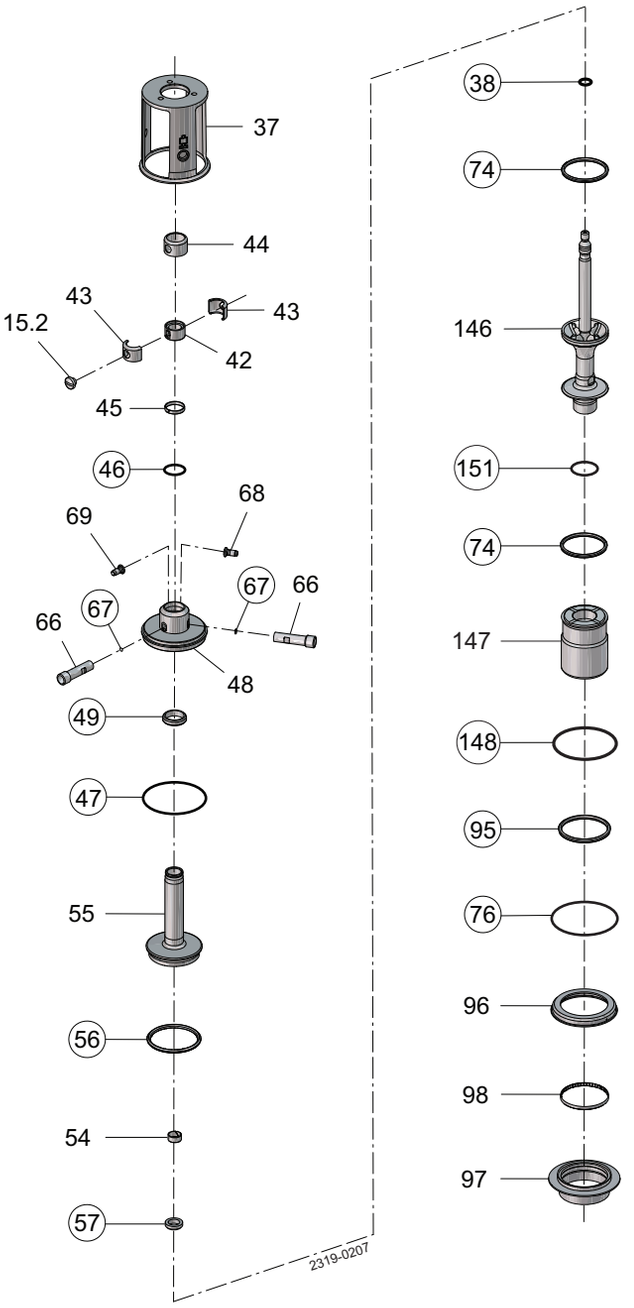

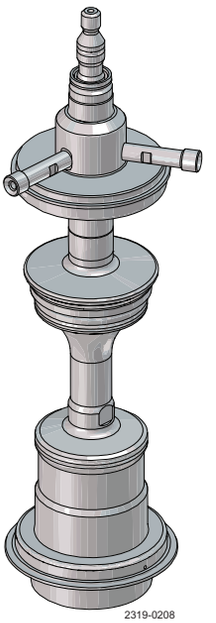

◯ = wear parts

Pos. 37, see section
See note below service kits.

Pos		Qty	Denomination	DN/OD 51 seat ø53.3	DN 50 seat ø53.3	DN/OD 63.5 seat ø81.3	DN 65 seat ø81.3
Spindle liner							
15		1	Plug	9613414101	9613414101	9613414101	9613414101
42		1	Spindle liner	9613011601	9613011601	9613009001	9613009001
43		2	Clamp	9613011801	9613011801	9613009201	9613009201
44		1	Lock	9613011701	9613011701	9613009101	9613009101
Upper sealing element							
45		1	Guide ring, PTFE	9613008416	9613008416	9613008417	9613008417
46	□	1	O-ring, EPDM	9611993653	9611993653	9611993654	9611993654
47	□	1	O-ring, EPDM	9611993632	9611993632	9611993636	9611993636
	□	1	O-ring, NBR	9611993633	9611993633	9611993637	9611993637
	□	1	O-ring, FPM	9611993634	9611993634	9611993638	9611993638
	□	1	O-ring, HNBR	9611993635	9611993635	9611993639	9611993639
48		1	Upper sealing element	9613014301	9613014301	9613006501	9613006501
49	□	1	Lip seal, EPDM	9613008501	9613008501	9613008511	9613008511
	□	1	Lip seal, NBR	9613008502	9613008502	9613008512	9613008512
	□	1	Lip seal, FPM	9613008503	9613008503	9613008513	9613008513
	□	1	Lip seal, HNBR	9613008504	9613008504	9613008514	9613008514
66		2	Flushing tube	9613007902	9613007902	9613007903	9613007903
67	□	2	O-ring, EPDM	9611993119	9611993119	9611993119	9611993119
68		1	Drain	9613008001	9613008001	9613008001	9613008001
69		1	Nozzle	9613008002	9613008002	9613008002	9613008002
Upper plug							
54		1	Guide ring, PTFE	9613008401	9613008401	9613008402	9613008402
55		1	Upper plug	9613016202	9613016202	9613008202	9613008202
56	□	1	Seal ring, EPDM	9613095106	9613095106	9613095109	9613095109
	□	1	Seal ring, NBR	9613095114	9613095114	9613095115	9613095115
	□	1	Seal ring, FPM	9613095105	9613095105	9613095108	9613095108
	□	1	Seal ring, HNBR	9613095104	9613095104	9613095107	9613095107
57	□	1	Lip seal, EPDM	9613008706	9613008706	9613008711	9613008711
	□	1	Lip seal, NBR	9613008707	9613008707	9613008712	9613008712
	□	1	Lip seal, FPM	9613008708	9613008708	9613008713	9613008713
	□	1	Lip seal, HNBR	9613008709	9613008709	9613008714	9613008714
Lower plug							
38		1	O-ring, EPDM	9611993555	9611993555	9611993572	9611993572
74	□	2	Seal ring, EPDM	9613095206	9613095206	9613095209	9613095209
	□	2	Seal ring, NBR	9613095214	9613095214	9613095215	9613095215
	□	2	Seal ring, FPM - Alfa Laval recommends EPDM	9613095205	9613095205	9613095208	9613095208
	□	2	Seal ring, HNBR	9613095204	9613095204	9613095207	9613095207
146		1	Lower plug, upper part	9615369602	9615369602	9615370002	9615370002
147		1	Balancer	9615373301	9615373302	9615373401	9615373402
150		1	Lower plug, complete (Pos. 146 + 147)	9615370507	9615370508	9615370617	9615370618
151	□	1	O-ring,	8010000125	8010000125	8010000126	8010000126
148	□	1	O-ring, EPDM	9611993632	9611993632	9611993636	9611993636
	□	1	O-ring, NBR	9611993633	9611993633	9611993637	9611993637
	□	1	O-ring, FPM	9611993634	9611993634	9611993638	9611993638
	□	1	O-ring, HNBR	9611993635	9611993635	9611993639	9611993639
Lower sealing element							
76	□	1	O-ring, EPDM	9611993632	9611993632	9611993636	9611993636
	□	1	O-ring, NBR	9611993633	9611993633	9611993637	9611993637
	□	1	O-ring, FPM	9611993634	9611993634	9611993638	9611993638
	□	1	O-ring, HNBR	9611993635	9611993635	9611993639	9611993639
95	□	1	Special lip seal, EPDM	9613464215	9613464215	9613464203	9613464203
	□	1	Special lip seal, NBR	9613464216	9613464216	9613464204	9613464204
	□	1	Special lip seal, HNBR	9613464213	9613464213	9613464201	9613464201
	□	1	Special lip seal, FPM	9613464214	9613464214	9613464202	9613464202
96		1	Lower sealing element, upper part	9613475801	9613475801	9613465201	9613465201
97		1	Lower sealing element, lower part	9613475901	9613475901	9613465301	9613465301
98		1	Guide ring, Turcite	9613466104	9613466104	9613466101	9613466101

Pos. 37, see section

See note below service kits.

1.7

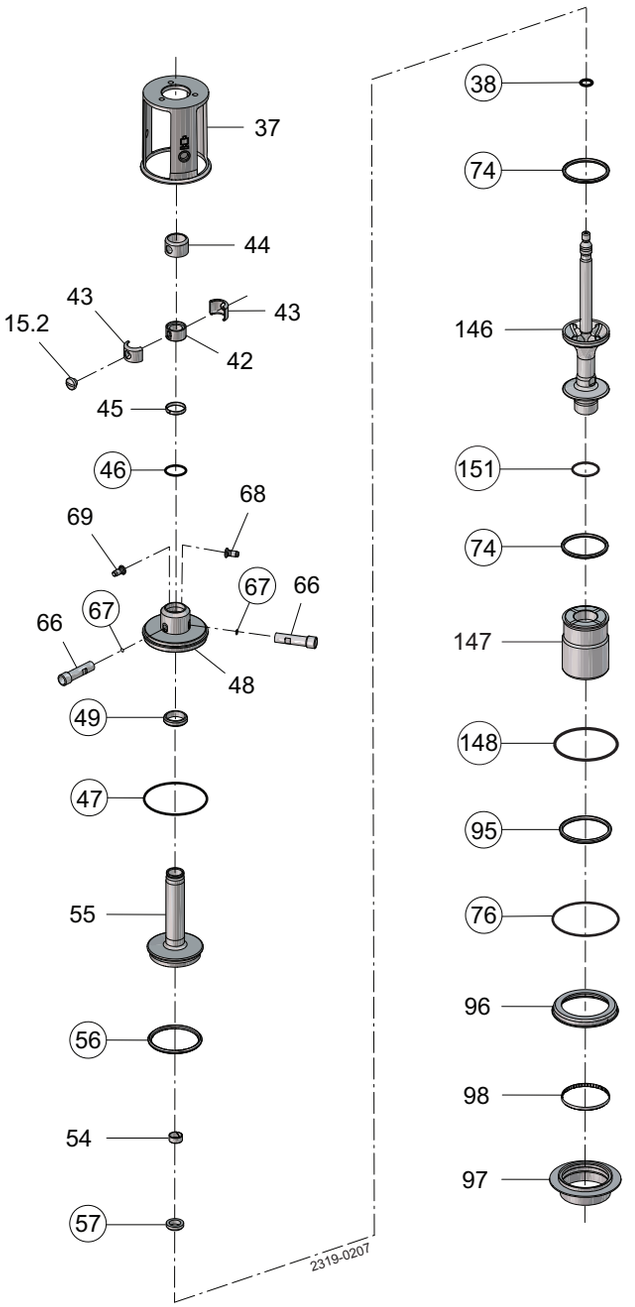

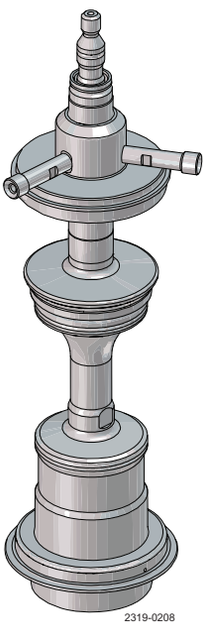

◯ = wear parts

Pos. 37, see section
See note below service kits.

Pos		Qty	Denomination	DN/OD 76.1 seat ø81.3	DN80 seat ø81.3	DN/OD 101.6 seat ø100.3	DN 100 seat ø100.3
Spindle liner							
15		1	Plug	9613414101	9613414101	9613414101	9613414101
42		1	Spindle liner	9613009001	9613009001	9613009001	9613009001
43		2	Clamp	9613009201	9613009201	9613009201	9613009201
44		1	Lock	9613009101	9613009101	9613009101	9613009101
Upper sealing element							
45		1	Guide ring, PTFE	9613008417	9613008417	9613008417	9613008417
46	□	1	O-ring, EPDM	9611993654	9611993654	9611993654	9611993654
47	□	1	O-ring, EPDM	9611993636	9611993636	9611993640	9611993640
	□	1	O-ring, NBR	9611993637	9611993637	9611993641	9611993641
	□	1	O-ring, FPM	9611993638	9611993638	9611993642	9611993642
	□	1	O-ring, HNBR	9611993639	9611993639	9611993643	9611993643
48		1	Upper sealing element	9613006501	9613006501	9613018901	9613018901
49	□	1	Lip seal, EPDM	9613008511	9613008511	9613008511	9613008511
	□	1	Lip seal, NBR	9613008512	9613008512	9613008512	9613008512
	□	1	Lip seal, FPM	9613008513	9613008513	9613008513	9613008513
	□	1	Lip seal, HNBR	9613008514	9613008514	9613008514	9613008514
66		2	Flushing tube	9613007903	9613007903	9613007904	9613007904
67	□	2	O-ring, EPDM	9611993119	9611993119	9611993119	9611993119
68		1	Drain	9613008001	9613008001	9613008001	9613008001
69		1	Nozzle	9613008002	9613008002	9613008002	9613008002
Upper plug							
54		1	Guide ring, PTFE	9613008402	9613008402	9613008402	9613008402
55		1	Upper plug	9613008202	9613008202	9613091402	9613091402
56	□	1	Seal ring, EPDM	9613095109	9613095109	9613095119	9613095119
	□	1	Seal ring, NBR	9613095115	9613095115	9613095120	9613095120
	□	1	Seal ring, FPM	9613095108	9613095108	9613095118	9613095118
	□	1	Seal ring, HNBR	9613095107	9613095107	9613095117	9613095117
57	□	1	Lip seal, EPDM	9613008711	9613008711	9613008711	9613008711
	□	1	Lip seal, NBR	9613008712	9613008712	9613008712	9613008712
	□	1	Lip seal, FPM	9613008713	9613008713	9613008713	9613008713
	□	1	Lip seal, HNBR	9613008714	9613008714	9613008714	9613008714
Lower plug							
38	□	1	O-ring, EPDM	9611993572	9611993572	9611993572	9611993572
74	□	2	Seal ring, EPDM	9613095209	9613095209	9613095219	9613095219
	□	2	Seal ring, NBR	9613095215	9613095215	9613095220	9613095220
	□	2	Seal ring, FPM - Alfa Laval recommends EPDM	9613095208	9613095208	9613095218	9613095218
	□	2	Seal ring, HNBR	9613095207	9613095207	9613095217	9613095217
146		1	Lower plug, upper part	9615370004	9615370006	9615370402	9615370402
147		1	Balancer	9615373403	9615373404	9615373501	9615373502
150		1	Lower plug, complete (Pos. 146 + 147)	9615370619	9615370620	9615370707	9615370708
151	□	1	O-ring	8010000126	8010000126	8010000127	8010000127
148	□	1	O-ring, EPDM	9611993636	9611993636	9611993640	9611993640
	□	1	O-ring, NBR	9611993637	9611993637	9611993641	9611993641
	□	1	O-ring, FPM	9611993638	9611993638	9611993642	9611993642
	□	1	O-ring, HNBR	9611993639	9611993639	9611993643	9611993643
Lower sealing element							
76	□	1	O-ring, EPDM	9611993636	9611993636	9611993640	9611993640
	□	1	O-ring, NBR	9611993637	9611993637	9611993641	9611993641
	□	1	O-ring, FPM	9611993638	9611993638	9611993642	9611993642
	□	1	O-ring, HNBR	9611993639	9611993639	9611993643	9611993643
95	□	1	Special lip seal, EPDM	9613464203	9613464203	9613464219	9613464219
	□	1	Special lip seal, NBR	9613464204	9613464204	9613464220	9613464220
	□	1	Special lip seal, HNBR	9613464201	9613464201	9613464217	9613464217
	□	1	Special lip seal, FPM	9613464202	9613464202	9613464218	9613464218
96		1	Lower sealing element, upper part	9613465201	9613465201	9613476001	9613476001
97		1	Lower sealing element, lower part	9613465301	9613465301	9613476101	9613476101
98		1	Guide ring, Turcite	9613466101	9613466101	9613466105	9613466105

Pos. 37, see section

See note below service kits.

1.7

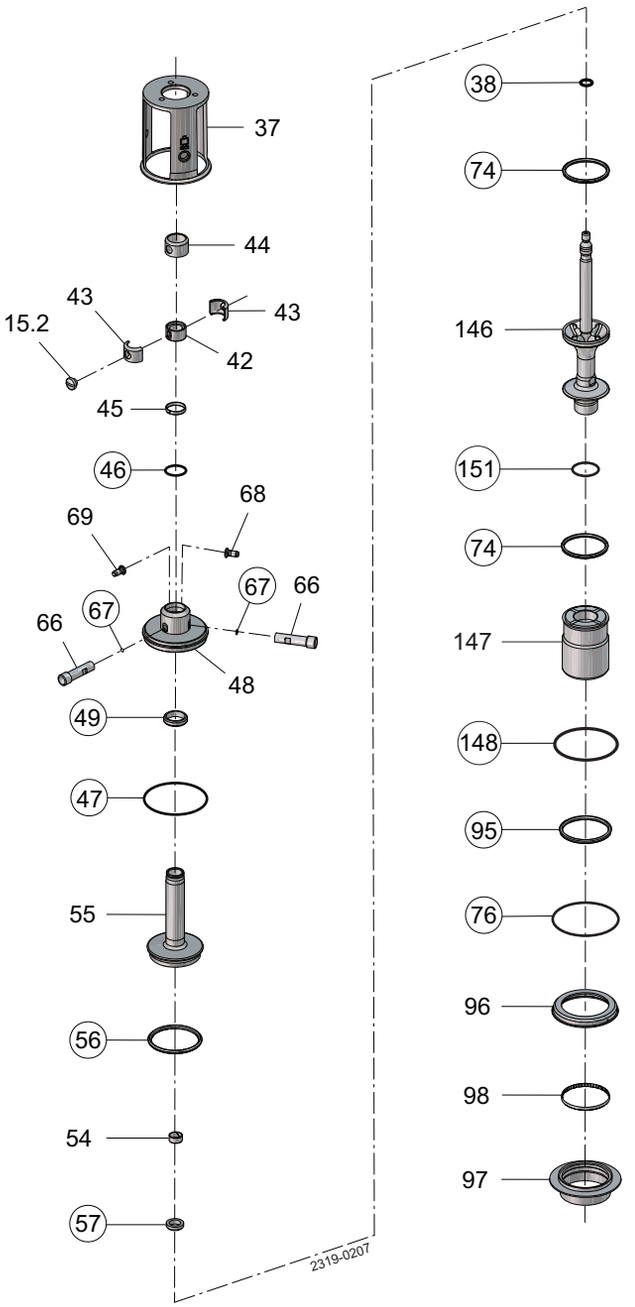

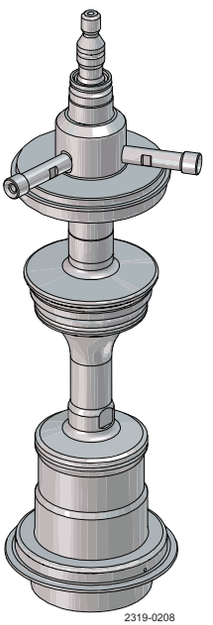

◯ = wear parts

Pos. 37, see section
See note below service kits.

		DN/OD 51 seat ø53.3	DN 50 seat ø53.3	DN/OD 63.5 seat ø81.3	DN 65 seat ø81.3
Service kits					
□	Service kit, EPDM	9611928474	9611928474	9611928475	9611928475
□	Service kit, NBR	9611928477	9611928477	9611928478	9611928478
□	Service kit, FPM	9611928480	9611928480	9611928481	9611928481
□	Service kit, HNBR	9611928483	9611928483	9611928484	9611928484

		DN/OD 76.1 seat ø81.3	DN80 seat ø81.3	DN/OD 101.6 seat ø100.3	DN 100 seat ø100.3
Service kits					
□	Service kit, EPDM	9611928475	9611928475	9611928476	9611928476
□	Service kit, NBR	9611928478	9611928478	9611928479	9611928479
□	Service kit, FPM	9611928481	9611928481	9611928482	9611928482
□	Service kit, HNBR	9611928484	9611928484	9611928485	9611928485

Parts marked with □ are included in the service kit.

NOTE!
If SpiralClean in leakage chamber extra O-rings (2 x pos. 39 and 1 x pos. 40) is required.
All FPM service kits are supplied with EPDM seal ring, pos. 74.

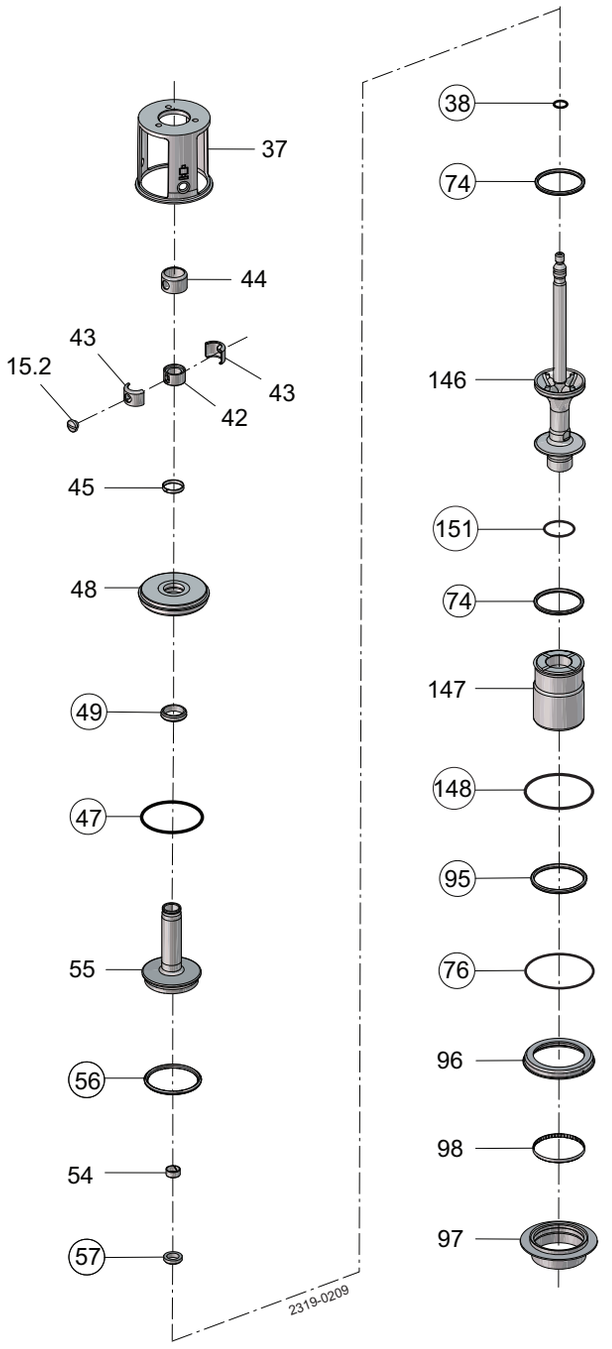

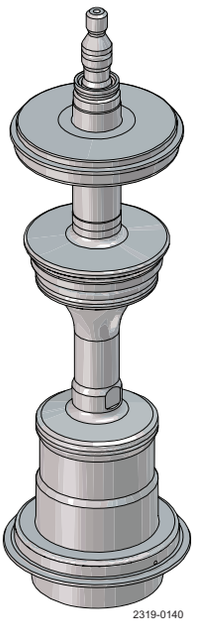

◯ = wear parts

Pos. 37, see section
See note below service kits.

Pos		Qty	Denomination	DN/OD 51 seat ø53.3	DN 50 seat ø53.3	DN/OD 63.5 seat ø81.3	DN 65 seat ø81.3
Spindle liner							
15		1	Plug	9613414101	9613414101	9613414101	9613414101
42		1	Spindle liner	9613011601	9613011601	9613009001	9613009001
43		2	Clamp	9613011801	9613011801	9613009201	9613009201
44		1	Lock	9613011701	9613011701	9613009101	9613009101
Upper sealing element							
45		1	Guide ring, PTFE	9613008416	9613008416	9613008417	9613008417
47	□	1	O-ring, EPDM	9611993632	9611993632	9611993636	9611993636
	□	1	O-ring, NBR	9611993633	9611993633	9611993637	9611993637
	□	1	O-ring, FPM	9611993634	9611993634	9611993638	9611993638
	□	1	O-ring, HNBR	9611993635	9611993635	9611993639	9611993639
48		1	Upper sealing element	9613014201	9613014201	9613006401	9613006401
49	□	1	Lip seal, EPDM	9613008501	9613008501	9613008511	9613008511
	□	1	Lip seal, NBR	9613008502	9613008502	9613008512	9613008512
	□	1	Lip seal, FPM	9613008503	9613008503	9613008513	9613008513
	□	1	Lip seal, HNBR	9613008504	9613008504	9613008514	9613008514
Upper plug							
54		1	Guide ring, PTFE	9613008401	9613008401	9613008402	9613008402
55		1	Upper plug	9613016201	9613016201	9613008201	9613008201
56	□	1	Seal ring, EPDM	9613095106	9613095106	9613095109	9613095109
	□	1	Seal ring, NBR	9613095114	9613095114	9613095115	9613095115
	□	1	Seal ring, FPM	9613095105	9613095105	9613095108	9613095108
	□	1	Seal ring, HNBR	9613095104	9613095104	9613095107	9613095107
57	□	1	Lip seal, EPDM	9613008706	9613008706	9613008711	9613008711
	□	1	Lip seal, NBR	9613008707	9613008707	9613008712	9613008712
	□	1	Lip seal, FPM	9613008708	9613008708	9613008713	9613008713
	□	1	Lip seal, HNBR	9613008709	9613008709	9613008714	9613008714
Lower plug							
38	□	1	O-ring, EPDM	9611993555	9611993555	9611993572	9611993572
74	□	2	Seal ring, EPDM	9613095206	9613095206	9613095209	9613095209
	□	2	Seal ring, NBR	9613095214	9613095214	9613095215	9613095215
	□	2	Seal ring, FPM - Alfa Laval recommends EPDM	9613095205	9613095205	9613095208	9613095208
	□	2	Seal ring, HNBR	9613095204	9613095204	9613095207	9613095207
146		1	Lower plug, upper part	9615369601	9615369601	9615370001	9615370001
147		1	Balancer	9615373301	9615373302	9615373401	9615373402
150		1	Lower plug, complete (Pos. 146 + 147)	9615370505	9615370506	9615370613	9615370614
151	□	1	O-ring	8010000125	8010000125	8010000126	8010000126
148	□	1	O-ring, EPDM	9611993632	9611993632	9611993636	9611993636
	□	1	O-ring, NBR	9611993633	9611993633	9611993637	9611993637
	□	1	O-ring, FPM	9611993634	9611993634	9611993638	9611993638
	□	1	O-ring, HNBR	9611993635	9611993635	9611993639	9611993639
Lower sealing element							
76	□	1	O-ring, EPDM	9611993632	9611993632	9611993636	9611993636
	□	1	O-ring, NBR	9611993633	9611993633	9611993637	9611993637
	□	1	O-ring, FPM	9611993634	9611993634	9611993638	9611993638
	□	1	O-ring, HNBR	9611993635	9611993635	9611993639	9611993639
95	□	1	Special lip seal, EPDM	9613464215	9613464215	9613464203	9613464203
	□	1	Special lip seal, NBR	9613464216	9613464216	9613464204	9613464204
	□	1	Special lip seal, HNBR	9613464213	9613464213	9613464201	9613464201
	□	1	Special lip seal, FPM	9613464214	9613464214	9613464202	9613464202
96		1	Lower sealing element, upper part	9613475801	9613475801	9613465201	9613465201
97		1	Lower sealing element, lower part	9613475901	9613475901	9613465301	9613465301
98		1	Guide ring, Turcite	9613466104	9613466104	9613466101	9613466101

Pos. 37, see section

See note below service kits.

1.7

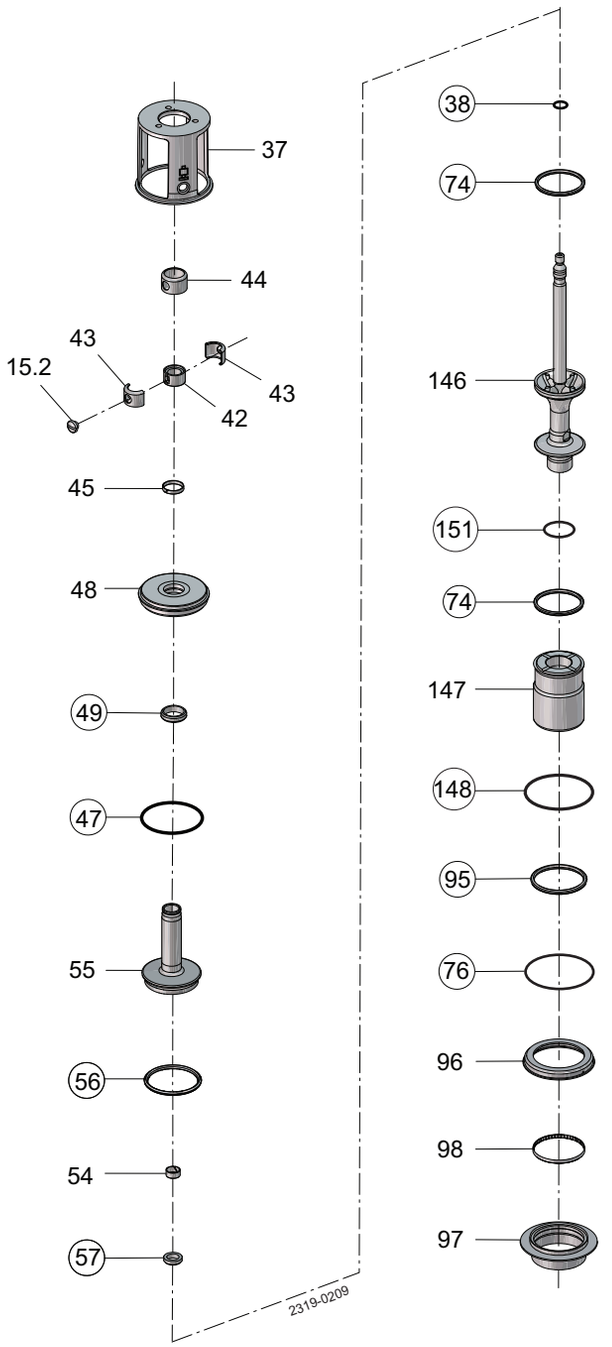

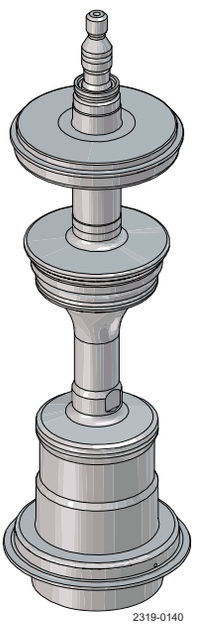

◯ = wear parts

Pos. 37, see section
See note below service kits.

Pos		Qty	Denomination	DN/OD 76.1 seat ø81.3	DN80 seat ø81.3	DN/OD 101.6 seat ø100.3	DN 100 seat ø100.3
Spindle liner							
15		1	Plug	9613414101	9613414101	9613414101	9613414101
42		1	Spindle liner	9613009001	9613009001	9613009001	9613009001
43		2	Clamp	9613009201	9613009201	9613009201	9613009201
44		1	Lock	9613009101	9613009101	9613009101	9613009101
Upper sealing element							
45		1	Guide ring, PTFE	9613008417	9613008417	9613008417	9613008417
47	□	1	O-ring, EPDM	9611993636	9611993636	9611993640	9611993640
	□	1	O-ring, NBR	9611993637	9611993637	9611993641	9611993641
	□	1	O-ring, FPM	9611993638	9611993638	9611993642	9611993642
	□	1	O-ring, HNBR	9611993639	9611993639	9611993643	9611993643
48		1	Upper sealing element	9613006401	9613006401	9613018801	9613018801
49	□	1	Lip seal, EPDM	9613008511	9613008511	9613008511	9613008511
	□	1	Lip seal, NBR	9613008512	9613008512	9613008512	9613008512
	□	1	Lip seal, FPM	9613008513	9613008513	9613008513	9613008513
	□	1	Lip seal, HNBR	9613008514	9613008514	9613008514	9613008514
Upper plug							
54		1	Guide ring, PTFE	9613008402	9613008402	9613008402	9613008402
55		1	Upper plug	9613008201	9613008201	9613091401	9613091401
56	□	1	Seal ring, EPDM	9613095109	9613095109	9613095119	9613095119
	□	1	Seal ring, NBR	9613095115	9613095115	9613095120	9613095120
	□	1	Seal ring, FPM	9613095108	9613095108	9613095118	9613095118
	□	1	Seal ring, HNBR	9613095107	9613095107	9613095117	9613095117
57	□	1	Lip seal, EPDM	9613008711	9613008711	9613008711	9613008711
	□	1	Lip seal, NBR	9613008712	9613008712	9613008712	9613008712
	□	1	Lip seal, FPM	9613008713	9613008713	9613008713	9613008713
	□	1	Lip seal, HNBR	9613008714	9613008714	9613008714	9613008714
Lower plug							
38	□	1	O-ring, EPDM	9611993572	9611993572	9611993572	9611993572
74	□	2	Seal ring, EPDM	9613095209	9613095209	9613095219	9613095219
	□	2	Seal ring, NBR	9613095215	9613095215	9613095220	9613095220
	□	2	Seal ring, FPM - Alfa Laval recommends EPDM	9613095208	9613095208	9613095218	9613095218
	□	2	Seal ring, HNBR	9613095207	9613095207	9613095217	9613095217
146		1	Lower plug, upper part	9615370003	9615370005	9615370401	9615370401
147		1	Balancer	9615373403	9615373404	9615373501	9615373502
150		1	Lower plug, complete (Pos. 146 + 147)	9615370615	9615370616	9615370705	9615370706
151		1	O-ring	8010000126	8010000126	8010000127	8010000127
148	□	1	O-ring, EPDM	9611993636	9611993636	9611993640	9611993640
	□	1	O-ring, NBR	9611993637	9611993637	9611993641	9611993641
	□	1	O-ring, FPM	9611993638	9611993638	9611993642	9611993642
	□	1	O-ring, HNBR	9611993639	9611993639	9611993643	9611993643
Lower sealing element							
76	□	1	O-ring, EPDM	9611993636	9611993636	9611993640	9611993640
	□	1	O-ring, NBR	9611993637	9611993637	9611993641	9611993641
	□	1	O-ring, FPM	9611993638	9611993638	9611993642	9611993642
	□	1	O-ring, HNBR	9611993639	9611993639	9611993643	9611993643
95	□	1	Special lip seal, EPDM	9613464203	9613464203	9613464219	9613464219
	□	1	Special lip seal, NBR	9613464204	9613464204	9613464220	9613464220
	□	1	Special lip seal, HNBR	9613464201	9613464201	9613464217	9613464217
	□	1	Special lip seal, FPM	9613464202	9613464202	9613464218	9613464218
96		1	Lower sealing element, upper part	9613465201	9613465201	9613476001	9613476001
97		1	Lower sealing element, lower part	9613465301	9613465301	9613476101	9613476101
98		1	Guide ring, Turcite	9613466101	9613466101	9613466105	9613466105

Pos. 37, see section

See note below service kits.

1.7

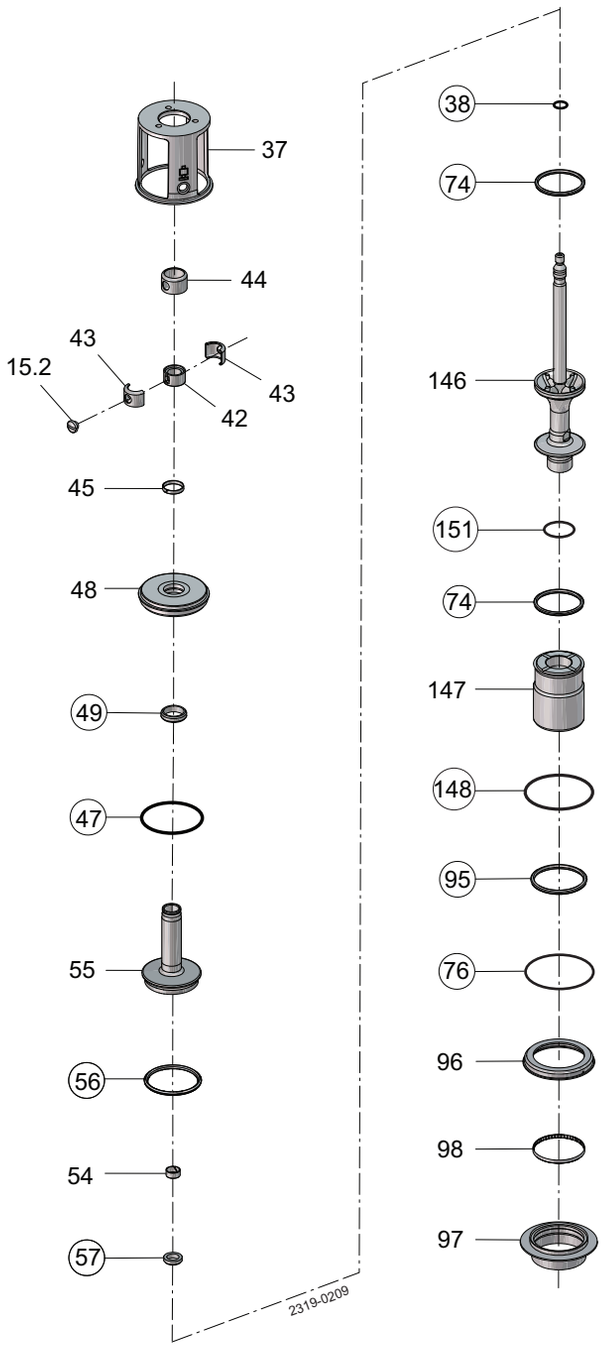

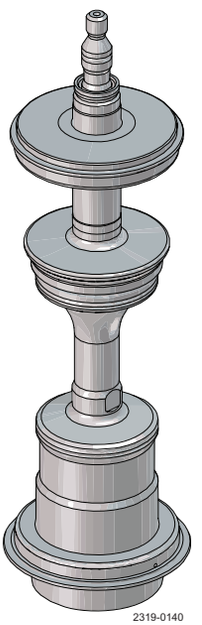

◯ = wear parts

Pos. 37, see section
See note below service kits.

		DN/OD 51 seat ø53.3	DN 50 seat ø53.3	DN/OD 63.5 seat ø81.3	DN 65 seat ø81.3
Service kits					
□	Service kit, EPDM	9611928498	9611928498	9611928499	9611928499
□	Service kit, NBR	9611928501	9611928501	9611928502	9611928502
□	Service kit, FPM	9611928504	9611928504	9611928505	9611928505
□	Service kit, HNBR	9611928507	9611928507	9611928508	9611928508

		DN/OD 76.1 seat ø81.3	DN80 seat ø81.3	DN/OD 101.6 seat ø100.3	DN 100 seat ø100.3
Service kits					
□	Service kit, EPDM	9611928499	9611928499	9611928500	9611928500
□	Service kit, NBR	9611928502	9611928502	9611928503	9611928503
□	Service kit, FPM	9611928505	9611928505	9611928506	9611928506
□	Service kit, HNBR	9611928508	9611928508	9611928509	9611928509

Parts marked with □ are included in the service kit.

NOTE!
If SpiralClean in leakage chamber extra O-rings (2 x pos. 39 and 1 x pos. 40) is required.
All FPM service kits are supplied with EPDM seal ring, pos. 74.

1.7

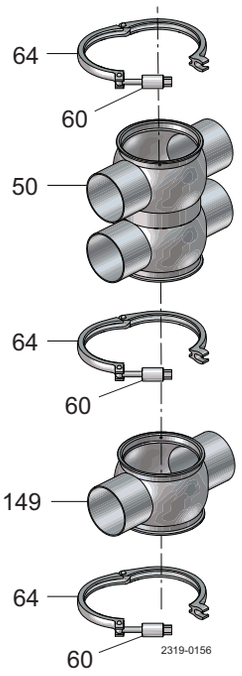

Body combinations - welded bodies

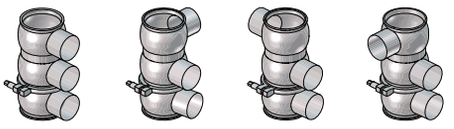
111-00 111-90 111-180 111-270

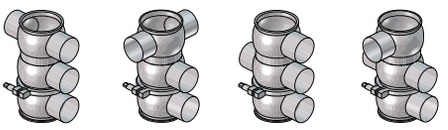
112-00 112-90 121-00 121-90

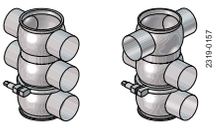

122-00 122-90

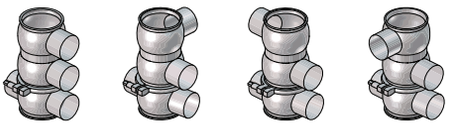
211-00 211-90 211-180 211-270

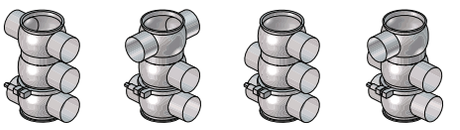
212-00 212-90 221-00 221-90

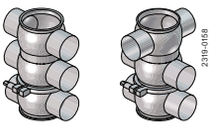

222-00 222-90

Pos	Qty	Denomination	DN/OD 51 Seat ø53.3	DN 50 Seat ø53.3	DN/OD 63.5 Seat ø81.3	DN65 Seat ø81.3
37	1	Yoke, plug set-up 31+33+39	9614255901	9614255909	9614256301	9614256307
	1	Yoke, plug set-up 23+25+37	9614255902	9614255910	9614256302	9614256308
60	3	Hexnut	9613023201	9613023201	9613023201	9613023201
64	3	Clamp without nut	9613021501	9613021501	9613021601	9613021601
External and internal blasted						
50	1	Valve body, 11-00	9613057201	9613057211	9613057301	9613057311
	1	Valve body, 12-00	9613057205	9613057215	9613057305	9613057315
	1	Valve body, 21-00	9613057207	9613057217	9613057307	9613057317
	1	Valve body, 22-00	9613057209	9613057219	9613057309	9613057319
	1	Valve body, 11-90	9613057202	9613057212	9613057302	9613057312
	1	Valve body, 12-90	9613057206	9613057216	9613057306	9613057316
	1	Valve body, 21-90	9613057208	9613057218	9613057308	9613057318
	1	Valve body, 22-90	9613057210	9613057220	9613057310	9613057320
	1	Valve body, 11-180	9613057203	9613057213	9613057303	9613057313
	1	Valve body, 11-270	9613057204	9613057214	9613057304	9613057314
External and internal blasted						
149	1	Valve body, 1 port	9615375101	9615375201	9615375103	9615375203
	1	Valve body, 2 ports	9615375102	9615375202	9615375104	9615375204

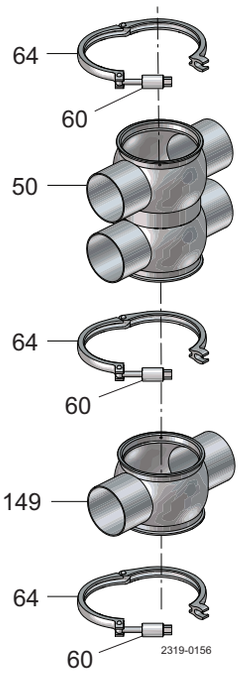

Body combinations - welded bodies

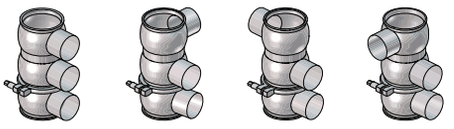
111-00 111-90 111-180 111-270

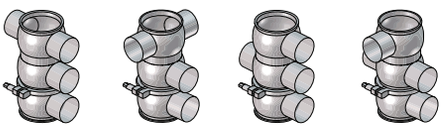
112-00 112-90 121-00 121-90

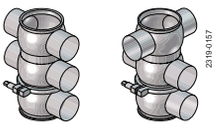

122-00 122-90

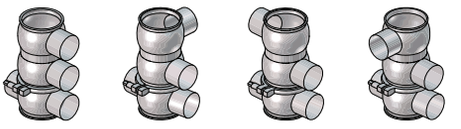
211-00 211-90 211-180 211-270

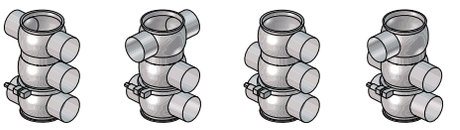
212-00 212-90 221-00 221-90

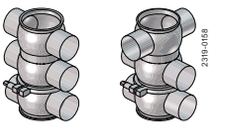

222-00 222-90

Pos	Qty	Denomination	DN/OD 76.1 Seat ø81.3	DN 80 Seat ø81.3	DN/OD 101.6 Seat ø100.3	DN100 Seat ø100.3
37	1	Yoke, plug set-up 31+33+39	9614256303	9614256309	9614256701	9614256703
	1	Yoke, plug set-up 23+25+37	9614256304	9614256310	9614256702	9614256704
60	3	Hexnut	9613023201	9613023201	9613023201	9613023201
64	3	Clamp without nut	9613021601	9613021601	9613021701	9613021701
External and internal blasted						
50	1	Valve body, 11-00	9613057401	9613057411	9613092701	9613092711
	1	Valve body, 12-00	9613057405	9613057415	9613092705	9613092715
	1	Valve body, 21-00	9613057407	9613057417	9613092707	9613092717
	1	Valve body, 22-00	9613057409	9613057419	9613092709	9613092719
	1	Valve body, 11-90	9613057402	9613057412	9613092702	9613092712
	1	Valve body, 12-90	9613057406	9613057416	9613092706	9613092716
	1	Valve body, 21-90	9613057408	9613057418	9613092708	9613092718
	1	Valve body, 22-90	9613057410	9613057420	9613092710	9613092720
	1	Valve body, 11-180	9613057403	9613057413	9613092703	9613092713
	1	Valve body, 11-270	9613057404	9613057414	9613092704	9613092714
External and internal blasted						
149	1	Valve body, 1 port	9615375105	9615375205	9615375107	9615375207
	1	Valve body, 2 ports	9615375106	9615375206	9615375108	9615375208

1.7

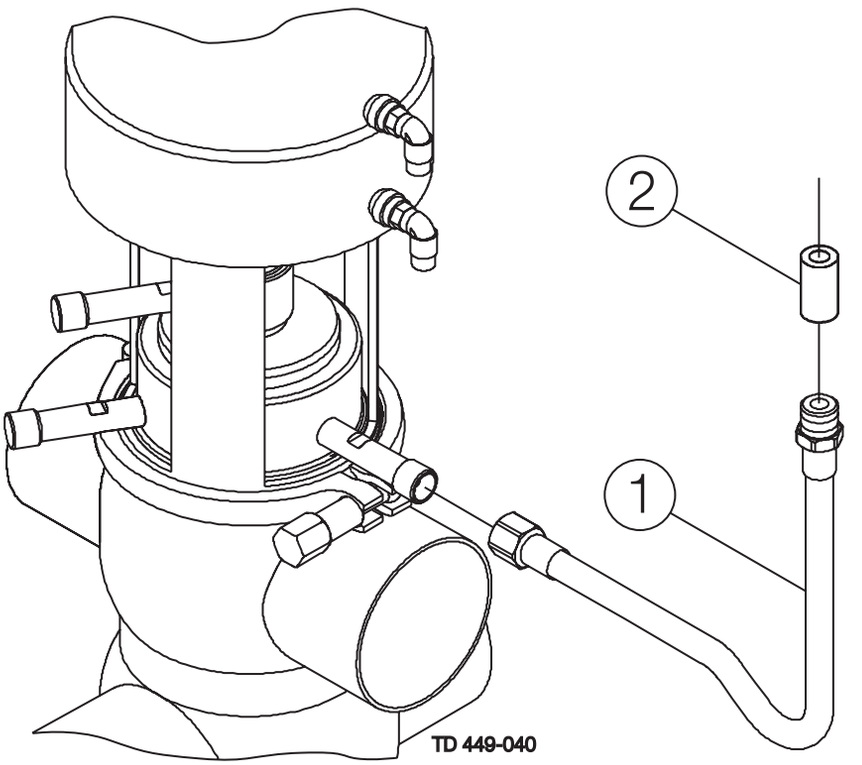

Pos	Qty	Denomination	
1	1	Hose PTFE w. s.s. weave	3135707451
2	1	Welding socket	9611990917

900-111/1

1.7

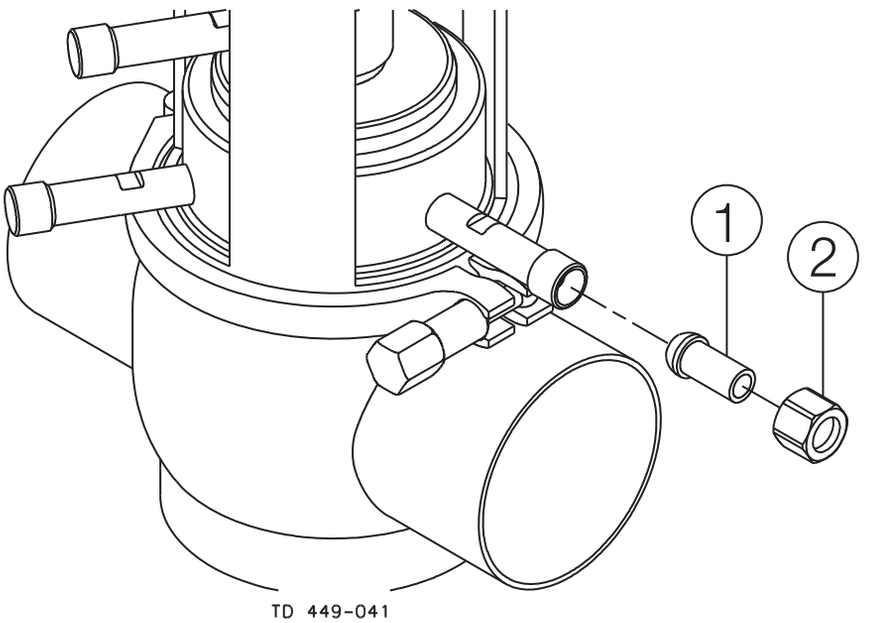

Pos	Qty	Denomination	3135710053
1	1	Welding liner	3135707431
2	1	Nut	3135707441

900-112/0

1.7

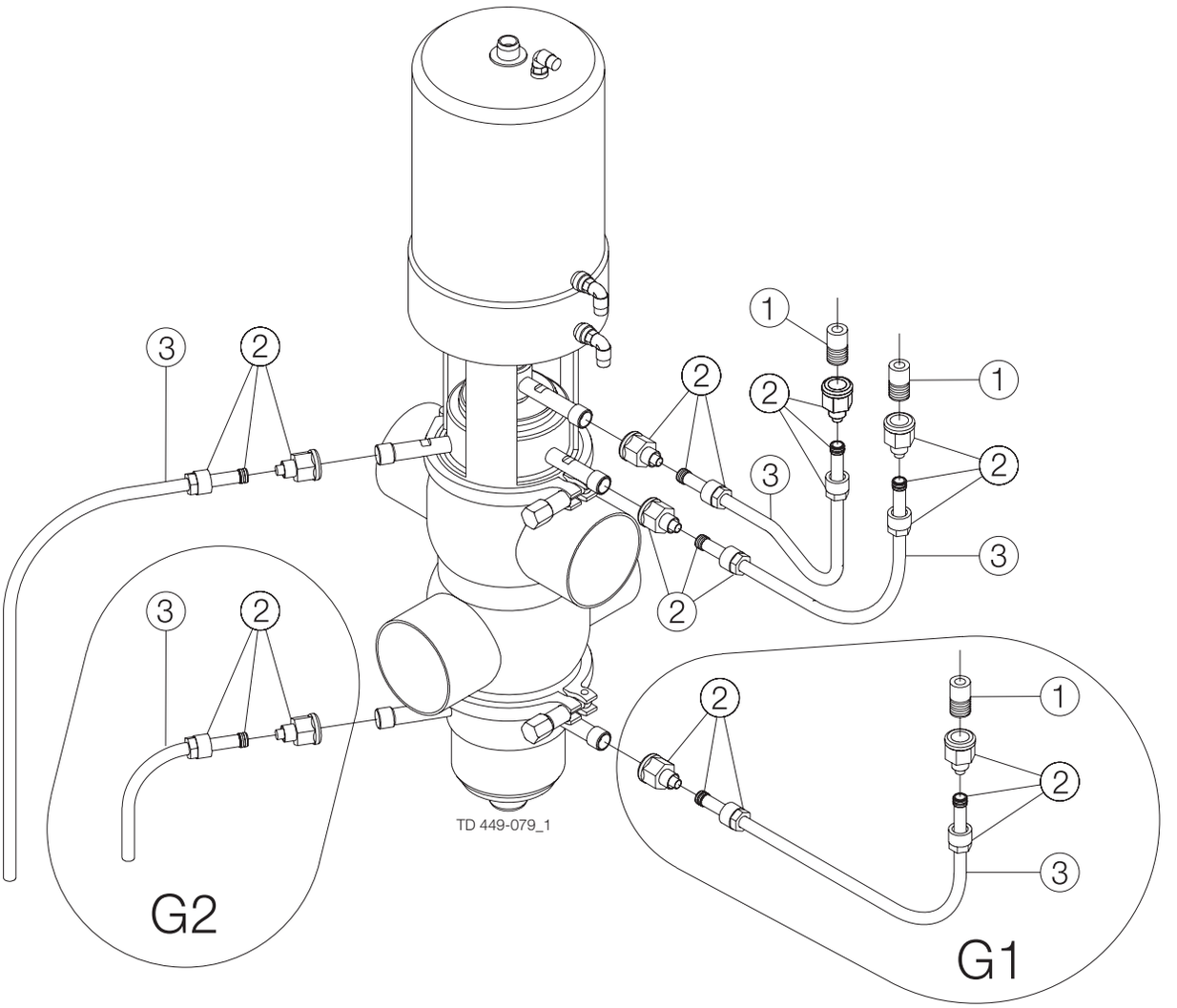

Installation Kit G1

Pos	Qty	Denomination	
1	1	Welding male part, AISI 316	3135707471
2	2	3/8" 10 mm Female PVDF	9611992372
3	1	10 mm PVDF hose, 1m	9611992607

Installation Kit G2

Pos	Qty	Denomination	
2	1	3/8" 10 mm Female PVDF	9611992372
3	1	10 mm PVDF hose, 1m	9611992607

900-113/2

1.7

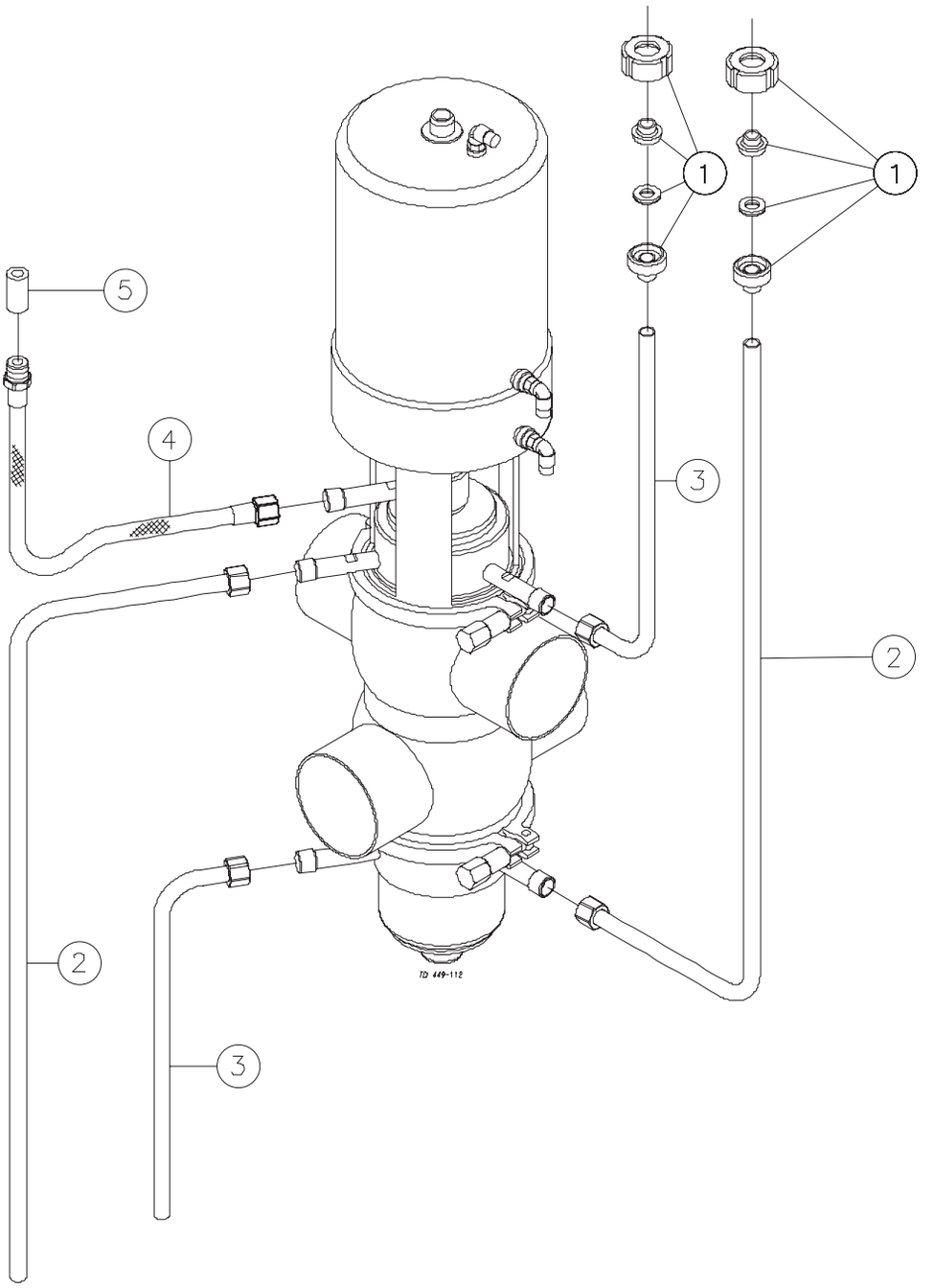

Installation Kit H

Pos	Qty	Denomination	
1	1	DIN union DN10	9611305791
	1	Nut, DN10	9611306420
	1	Welding liner DIN, DN10	9611305950
	1	Packing NBR, DN10	52734601
	1	Male part DIN, DN10	9611305900
2	1	12 mm CIP pipe long	3135710014
3	1	12 mm CIP pipe	3135710013

Installation Kit B

Pos	Qty	Denomination	
4	1	Hose PTFE w. s.s. weave	3135707451
5	1	Welding socket	9611990917

900-114/1

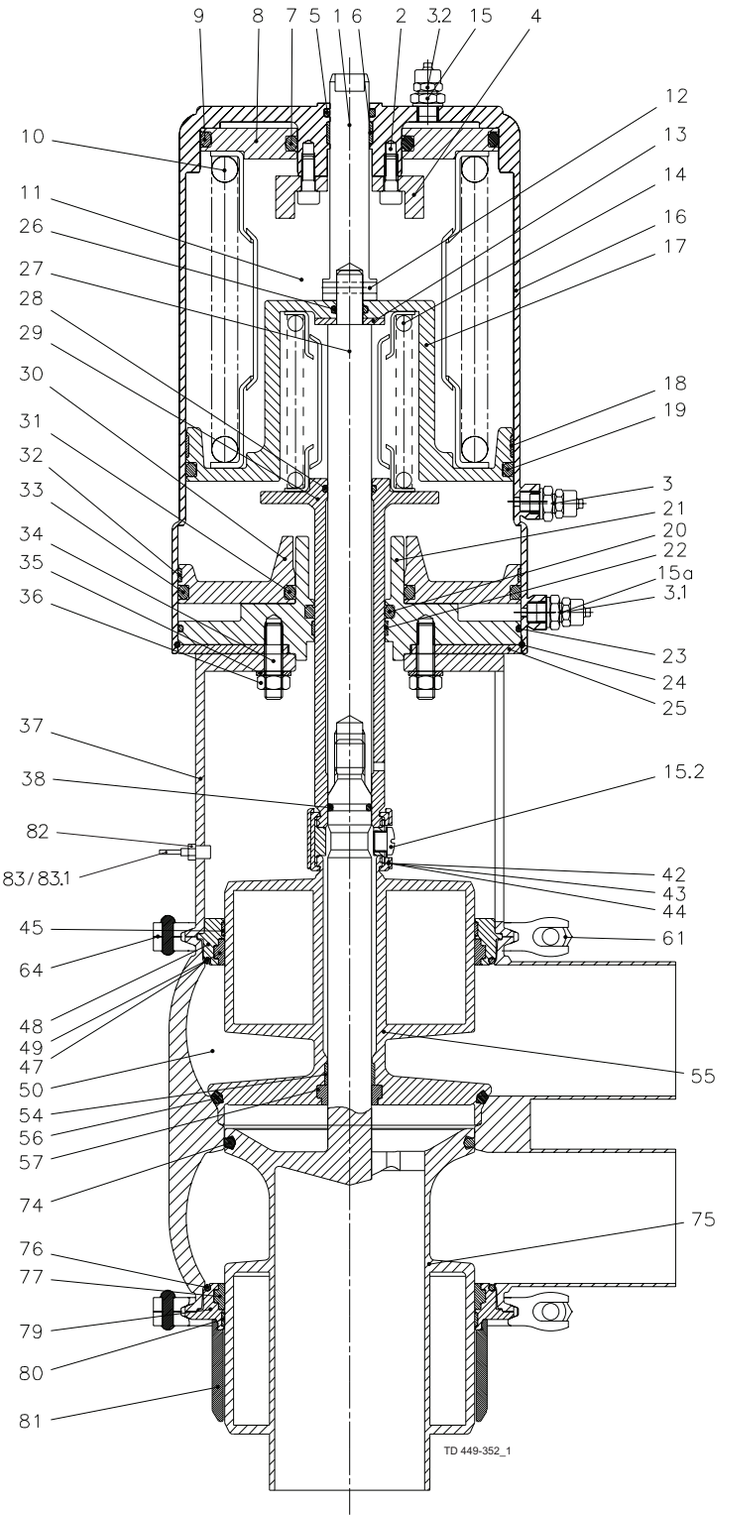
9
8
7
5
1
6
2
3.2
15
4
12
13
14
16
17
10
11
26
27
28
29
30
31
32
33
34
35
36
18
19
3
21
20
22
15a
3.1
23
24
25
37
38
82
83/83.1
15.2
42
43
44
61
45
64
48
49
47
50
54
56
57
74
55
75
76
77
79
80
81
TD 449-352_1

Wear Parts

Pos	Qty	Denomination	PMO 1½" Seat ø53.3*)	PMO 2" Seat ø81.3*)	PMO 2½" PMO 3" Seat ø115.3*)	PMO 4" Seat ø143.9*)	PMO 6" Seat ø206.1
38	1	O-ring, EPDM	9611993555	9611993555	9611993572	9611993572	9611993572
47	1	O-ring, EPDM (Standard)	9611993628	9611993636	9611993640	9611993644	9611995003
	1	O-ring, NBR	9611993629	9611993637	9611993641	9611993645	9611995004
	1	O-ring, HNBR	9611993631	9611993639	9611993643	9611993647	9611995006
	1	O-ring, FPM	9611993630	9611993638	9611993642	9611993646	9611995005
49	1	Lip seal, EDPM (Standard)	9613008521	9613008526	9613008531	9613008536	9613008560
	1	Lip seal, NBR	9613008522	9613008527	9613008532	9613008537	9613008561
	1	Lip seal, HNBR	9613008524	9613008529	9613008534	9613008539	9613008563
	1	Lip seal, FPM	9613008523	9613008528	9613008533	9613008538	9613008562
56	1	Seal ring, EPDM (Standard)	9613095106	9613095109	9613095112	9613095123	9613095151
	1	Seal ring, NBR	9613095114	9613095115	9613095116	9613095124	9613095152
	1	Seal ring, HNBR	9613095104	9613095107	9613095110	9613095121	9613095149
	1	Seal ring, FPM	9613095105	9613095108	9613095111	9613095122	9613095150
57	1	Lip seal, EPDM (Standard)	9613008706	9613008711	9613008711	9613008711	9613008711
	1	Lip seal, NBR	9613008707	9613008712	9613008712	9613008712	9613008712
	1	Lip seal, HNBR	9613008709	9613008714	9613008714	9613008714	9613008714
	1	Lip seal, FPM	9613008708	9613008713	9613008713	9613008713	9613008713
74	1	Seal ring, EPDM (Standard)	9613095206	9613095209	9613095212	9613095223	9613095247
	1	Seal ring, NBR	9613095214	9613095215	9613095216	9613095224	9613095248
	1	Seal ring, HNBR	9613095204	9613095207	9613095210	9613095221	9613095245
	1	Seal ring, FPM Alfa Laval recommends EPDM	9613095206	9613095209	9613095212	9613095223	9613095247
76	1	O-ring, EPDM (Standard)	9611993628	9611993636	9611993640	9611993644	9611995003
	1	O-ring, NBR	9611993629	9611993637	9611993641	9611993645	9611995004
	1	O-ring, HNBR	9611993631	9611993639	9611993643	9611993647	9611995006
	1	O-ring, FPM	9611993630	9611993638	9611993642	9611993646	9611995005
77	1	Lip seal, EPDM (Standard)	9613008554	9613008526	9613008531	9613008536	9613008560
	1	Lip seal, NBR	9613008555	9613008527	9613008532	9613008537	9613008561
	1	Lip seal, HNBR	9613008557	9613008529	9613008534	9613008539	9613008563
	1	Lip seal, FPM	9613008556	9613008528	9613008533	9613008538	9613008562

NOTE!
All FPM service kits are supplied with EPDM seal ring, pos. 74.

NOTE!
*) = From January 1st 2019, this valve size is not manufactured anymore. Spare parts will still be available.

Parts

1.7

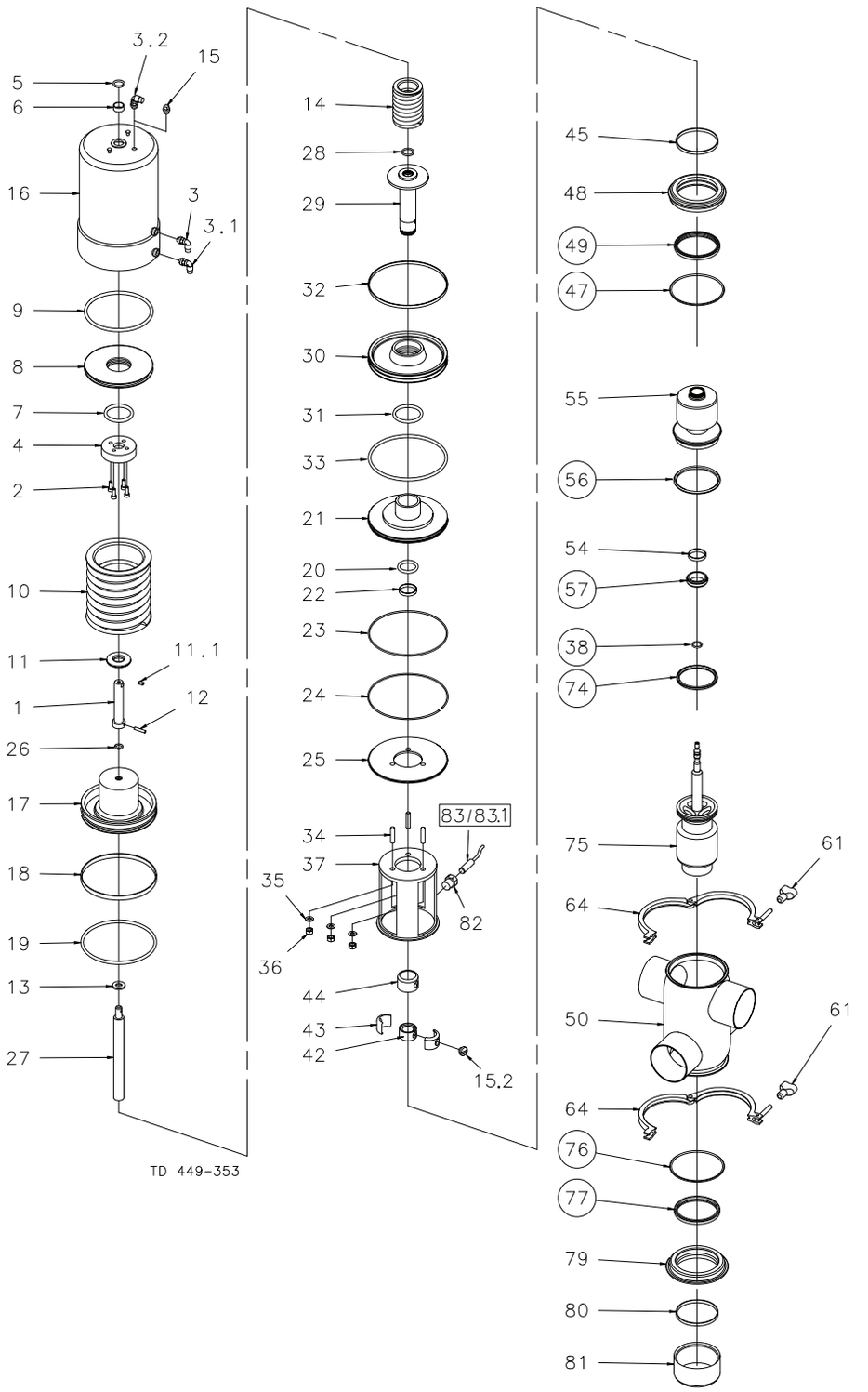

◯ = Wear parts

Parts

Pos		Qty	Denomination	PMO 1½" Seat ø53.3*)	PMO 2" Seat ø81.3*)	PMO 2½" Seat ø115.3*)	PMO 3" Seat ø115.3*)	PMO 4" Seat ø143.9*)	PMO 6" Seat ø206.1
			Cpl. Actuator	9613055476	9613055444	9613055564	9613055564	9613083745	9613489008
1		1	Upper stem	9613010102	9613010102	9613007401	9613007401	9613007402	9613007404
2		4	Screw			9611993342	9611993342	9611993342	9611990144
3		1	Kit, air fitting and label, (blue, ThinkTop)	9611926026	9611926026	9611926026	9611926026	9611926026	9611926026
		1	Kit, air fitting and label, (white, ThinkTop V-Series)	8010000754	8010000754	8010000754	8010000754	8010000754	8010000754
3.1		1	Kit, air fitting and label, (red, ThinkTop)	9611926028	9611926028	9611926028	9611926028	9611926028	9611926028
		1	Kit, air fitting and label, (blue, ThinkTop V-Series)	9611926026	9611926026	9611926026	9611926026	9611926026	9611926026
3.2		1	Kit, air fitting and label, (yellow)	9611926027	9611926027	9611926027	9611926027	9611926027	9611926027
4		1	Stop for upper piston			9613005301	9613005301	9613005302	9613488301
5	•	1	O-ring, NBR	9611993499	9611993499	9611993499	9611993499	9611993499	9611993499
6	•	1	Guide ring, Turcite	9613008408	9613008408	9613008408	9613008408	9613008408	9613008408
7	•	1	O-ring, NBR			9611993514	9611993514	9611993514	9611993514
8		1	Upper piston			9613005601	9613005601	9613005602	9613005602
9	•	1	O-ring, NBR			9611993512	9611993512	9611993513	9611993513
10		1	Spring assembly	9613012501	9613012501	9613007501	9613007501	9613025603	9613025605
11		1	Distance spacer	9613010202	9613010202				9613010207
11.1		1	Screw	9611991763	9611991763				
12		1	Pin	9611994197	9611994197	9611994198	9611994198	9611994199	9611994199
13		1	Washer	9611993594	9611993594	9611993595	9611993595	9611993596	9611993596
14		1	Spring assembly	9613013101	9613013102	9613009502	9613009502	9613009502	9613009503
15		1	Plug	9613414101	9613414101	9613414101	9613414101	9613414101	9613414101
16		1	Cylinder (3A marking)	9613012606	9613012606	9613005106	9613005106	9613015011	9613015021
17		1	Main piston	9613013201	9613013201	9613005701	9613005701	9613015901	9613015901
18	•	1	Guide ring, Turcite	9613008409	9613008409	9613008410	9613008410	9613008411	9613008411
19	•	1	O-ring, NBR	9611993505	9611993505	9611993507	9611993507	9611993509	9611993509
20	•	1	O-ring, NBR	9611993503	9611993503	9611993607	9611993607	9611993607	9611993607
21		1	Bottom	9613014001	9613014001	9613005401	9613005401	9613016801	9613016801
22	•	1	Guide ring, Turcite	9613008403	9613008403	9613008404	9613008404	9613008404	9613008404
23	•	1	O-ring, NBR	9611992228	9611992228	9611991489	9611991489	22340675	22340675
24		1	Retaining ring	9613024802	9613024802	9613024803	9613024803	9613024804	9613024804
25		1	Cover disk	9613005802	9613005802	9613005803	9613005803	9613005804	9613005804
26		1	O-ring, NBR	9611993528	9611993528	9611993495	9611993495	9611993530	9611993530
27		1	Inner stem	9613010602	9613010603	9613007303	9613007303	9613007302	9613007305
28	•	1	O-ring	9611993495	9611993495	9611990030	9611990030	9611990030	9611990030
29		1	Piston rod	9613013401	9613013402	9613006002	9613006002	9613006002	9613006004
30		1	Lower piston	9613013801	9613013801	9613005501	9613005501	9613016601	9613016601
31	•	1	O-ring, NBR	42153	42153	42153	42153	42153	42153
32	•	1	Guide ring, Turcite	9613008405	9613008405	9613008406	9613008406	9613008407	9613008407
33	•	1	O-ring, NBR	22341275	22341275	9611993508	9611993508	9611993510	9611993510
34		3	Bolt	9611993618	9611993618	9611993618	9611993618	9611993618	9611993618
35		3	Washer	9611993594	9611993594	9611993594	9611993594	9611993594	9611993594
36		3	Nut	9611990360	9611990360	9611990360	9611990360	9611990360	9611990360
42		1	Spindle liner	9613011601	9613033501	9613009001	9613009001	9613009001	9613009001
43		2	Clamp	9613011801	9613033601	9613009201	9613009201	9613009201	9613009201
44		1	Lock	9613011701	9613009102	9613009101	9613009101	9613009101	9613009101

Actuator diameter	Ø120	Ø157	Ø186
Actuator type	3	4BS	4SS, 5BS, 5SS
Connection size*	DN/OD 1½"-2"	DN/OD 2½"-3"	DN/OD 4"-6"
• Actuator service kit, part no.	9611926414	9611926415	9611926416

Pos		Qty	Denomination						
45		1	Guide ring, PTFE	9613008413	9613008414	9613008415	9613008415	9613008421	9613008421
48		1	Upper sealing element	9613490401	9613006404	9613018804	9613018804	9613071301	9613488001
54		1	Guide ring, PTFE	9613008401	9613008402	9613008402	9613008402	9613008402	9613008402
55		1	Upper plug	9613491601	9613070101	9613070201	9613070203	9613070401	9613488901
61		2	Wingnut	9612558001	9612558001	9612558001	9612558001	9612558001	9613149501
64		2	Clamp without nut	9613021501	9613021601	9613021701	9613021701	9613021801	9613488401
75		1	Lower plug	9613490601	9613070501	9613070601		9613070801	9613496501
79		1	Lower sealing element	9613490001	9613024104	9613024304	9613024304	9613071501	9613489101
80		1	Guide ring, PTFE	9613008427	9613008414	9613008415	9613008415	9613008421	9613008426
81		1	Cover for Plug	9613049026	9613049006	9613049007	9613049007	9613049016	9613049025
82	Δ	1	Bolt for indication	9613490102	9613092602	9613092604	9613092604	9613092604	9613092604
83	Δ	1	Sensor for indication	9611995770	9611995770	9611995770	9611995770	9611995770	9611995770
83.1		1	Cable for sensor for indication	9611994915	9611994915	9611994915	9611994915	9611994915	9611994915

NOTE!

Δ Sensor service kit for 1½" valves delivered prior to October 2015 - 9611928353

Δ Sensor service kit for 2" - 6" valves delivered prior to October 2015 - 9611928352

NOTE!

*) From January 1st 2019, this valve size is not manufactured anymore. Spare parts will still be available.

900-192/14

1.7

Parts

Pos	Qty	Denomination	PMO 1½" Seat ø53.3*)	PMO 2" Seat ø81.3*)	PMO 2½" Seat ø115.3*)	PMO 3" Seat ø115.3*)	PMO 4" Seat ø143.9*)	PMO 6" Seat ø206.1
37	1	Intermediate piece	9613015609	9613019121	9613019215	9613019213	9613019317	9613496601
50	1	Valve body, 11-00	9613489201	9613070901	9613071001	9613071101	9613071201	9613484801
	1	Valve body, 12-00	9613489205	9613070905	9613071005	9613071105	9613071205	9613484805
	1	Valve body, 21-00	9613489207	9613070907	9613071007	9613071107	9613071207	9613484807
	1	Valve body, 22-00	9613489209	9613070909	9613071009	9613071109	9613071209	9613484809
	1	Valve body, 11-90	9613489202	9613070902	9613071002	9613071102	9613071202	9613484802
	1	Valve body, 12-90	9613489206	9613070906	9613071006	9613071106	9613071206	9613484806
	1	Valve body, 21-90	9613489208	9613070908	9613071008	9613071108	9613071208	9613484808
	1	Valve body, 22-90	9613489210	9613070910	9613071010	9613071110	9613071210	9613484810
	1	Valve body, 11-180	9613489203	9613070903	9613071003	9613071103	9613071203	9613484803
	1	Valve body, 11-270	9613489204	9613070904	9613071004	9613071104	9613071204	9613484804

NOTE!

*) From January 1st 2019, this valve size is not manufactured anymore. Spare parts will still be available.

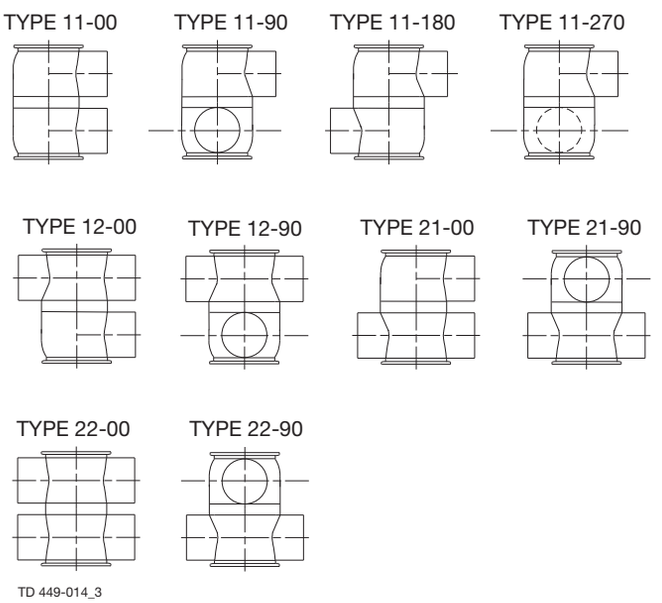

TD 449-014_3

Service kits for Product Wetted Parts

Plug set-up

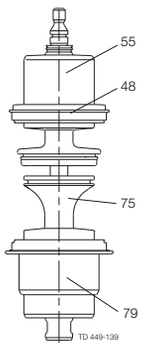

(Plug set-up 12)

PMO 1½" *)

Service kit, NBR	9611926845
Service kit, EPDM	9611926846
Service kit, HNBR	9611926847
Service kit, FPM	9611926848

PMO 2" *)

Service kit, NBR	9611926016
Service kit, EPDM	9611926013
Service kit, HNBR	9611926022
Service kit, FPM	9611926019

PMO 2.5"+3" *)

Service kit, NBR	9611926017
Service kit, EPDM	9611926014
Service kit, HNBR	9611926023
Service kit, FPM	9611926020

PMO 4" *)

Service kit, NBR	9611926018
Service kit, EPDM	9611926015
Service kit, HNBR	9611926024
Service kit, FPM	9611926021

PMO 6"

Service kit, NBR	9611926849
Service kit, EPDM	9611926850
Service kit, HNBR	9611926851
Service kit, FPM	9611926852

NOTE!
All FPM service kits are supplied with EPDM seal ring, pos. 74.

NOTE!
*) From January 1st 2019, this valve size is not manufactured anymore. Spare parts will still be available.

Rebuilding Set PMO to PMO Plus CP

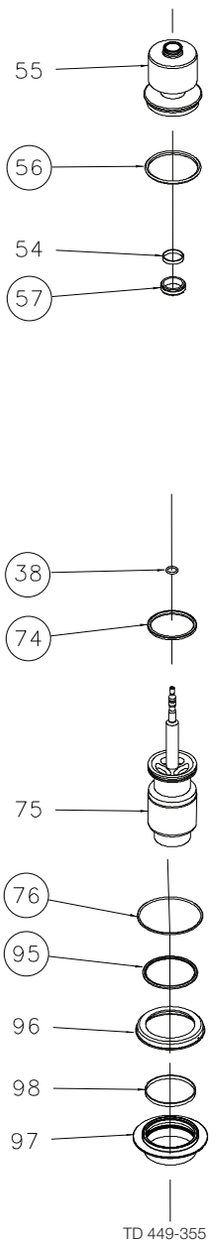

Rebuilding Set PMO to PMO Plus CP

Pos	Qty	Denomination	PMO 1½" Seat ø53,3*)	PMO 2" Seat ø81.3*)	PMO 2½" Seat ø115.3*)	PMO 3" Seat ø115.3*)	PMO 4" Seat ø143.9*)	PMO 6" Seat ø206.1
		Upper plug, cpl., NBR	9613466265	9613466201	9613466202	9613466203	9613466204	9613466266
		Upper plug, cpl., EPDM	9613466267	9613466205	9613466206	9613466207	9613466208	9613466268
		Upper plug, cpl., HNBR	9613466269	9613466209	9613466210	9613466211	9613466212	9613466270
		Upper plug, cpl., FPM	9613466271	9613466213	9613466214	9613466215	9613466216	9613466272

Pos	Qty	Denomination
54	1	Guide ring
55	1	Upper plug
56	1	Seal ring
57	1	Lip seal
99	1	Label

Pos	Qty	Denomination	PMO 1½" Seat ø53,3*)	PMO 2" Seat ø81.3*)	PMO 2½" Seat ø115.3*)	PMO 3" Seat ø115.3*)	PMO 4" Seat ø143.9*)	PMO 6" Seat ø206.1
		Lower plug, cpl., NBR	9613466273	9613466217	9613466218	9613466219	9613466220	9613466274
		Lower plug, cpl., EPDM	9613466275	9613466221	9613466222	9613466223	9613466224	9613466276
		Lower plug, cpl., HNBR	9613466277	9613466225	9613466226	9613466227	9613466228	9613466278
		Lower plug, cpl., FPM	9613466279	9613466229	9613466230	9613466231	9613466232	9613466280

Pos	Qty	Denomination
38	1	O-ring
74	1	Seal ring
75	1	Lower plug
76	1	O-ring
95	1	Special lip seal
96	1	Lower sealing element, upper part
97	1	Lower sealing element, lower part
98	1	Guide ring

NOTE!

*) From January 1st 2019, this valve size is not manufactured anymore. Spare parts will still be available.

1.7

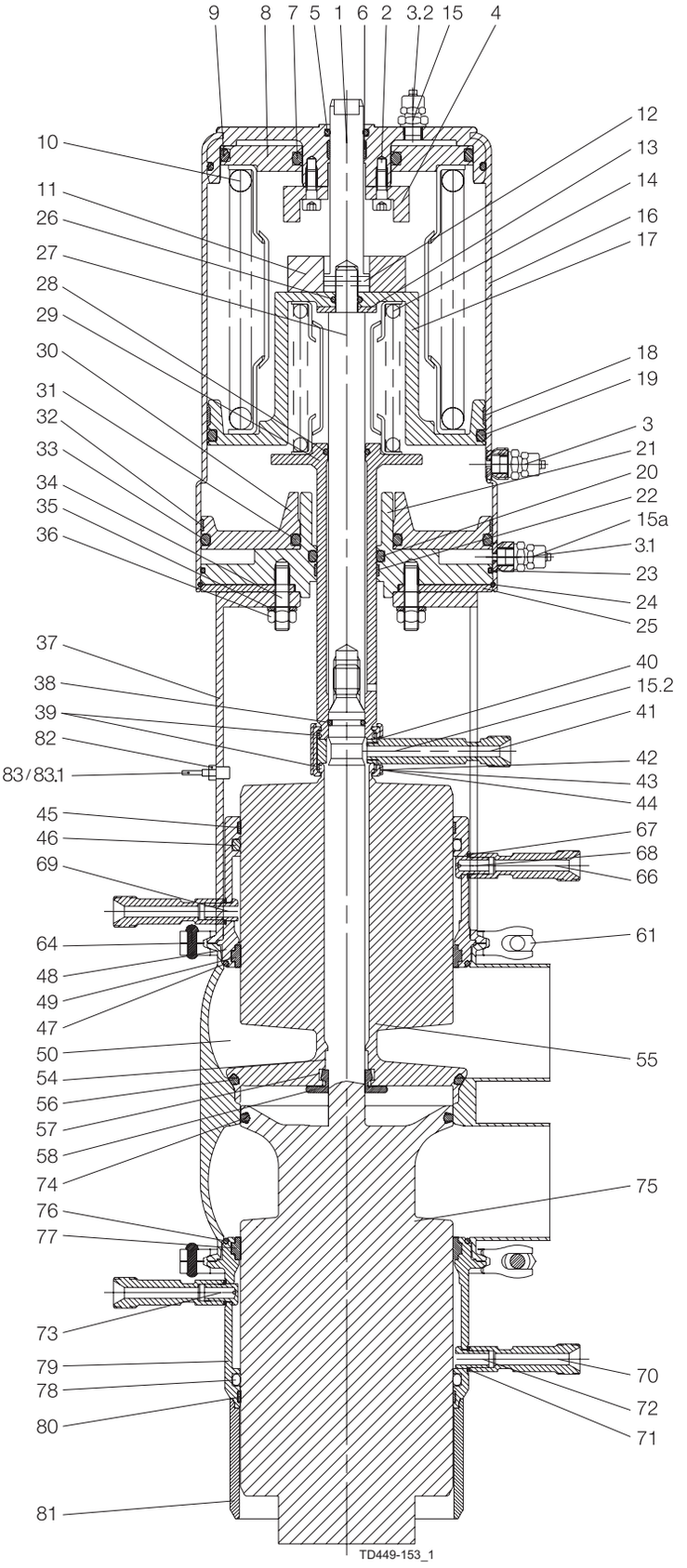
9
8
7
5
1
6
2
3.2
15
4
10
11
26
27
28
29
30
31
32
33
34
35
36
12
13
14
16
17
18
19
3
21
20
22
15a
3.1
23
24
25
37
38
39
82
83/83.1
40
15.2
41
42
43
44
45
46
69
64
48
49
47
50
54
56
57
58
74
76
77
73
79
78
80
81
67
68
66
61
55
75
70
72
71
TD449-153_1

Wear Parts

Pos	Qty	Denomination	PMO 2" Seat ø81.3	PMO 2½" PMO 3" Seat ø115.3	PMO 4" Seat ø143.9
38	1	O-ring, EPDM	9611993555	9611993572	9611993572
39	1	O-ring, EPDM	9611993492		
	1	O-ring, EPDM	9611993493		
	2	O-ring, EPDM		9611993493	9611993493
40	1	O-ring, EPDM	9611993119	9611993119	9611993119
46	1	O-ring, EPDM	9611993651	9611993652	9611994114
47	1	O-ring, NBR (Standard)	9611993637	9611993641	9611993645
	1	O-ring, EPDM	9611993636	9611993640	9611993644
	1	O-ring, HNBR	9611993639	9611993643	9611993647
	1	O-ring, FPM	9611993638	9611993642	9611993646
49	1	Lip seal, NBR (Standard)	9613008546	9613008547	9613008537
	1	Lip seal, EPDM	9613008526	9613008531	9613008536
	1	Lip seal, HNBR	9613008529	9613008534	9613008539
	1	Lip seal, FPM	9613008528	9613008533	9613008538
56	1	Seal ring, NBR (Standard)	9613095115	9613095116	9613095124
	1	Seal ring, EPDM	9613095109	9613095112	9613095123
	1	Seal ring, HNBR	9613095107	9613095110	9613095121
	1	Seal ring, FPM	9613095108	9613095111	9613095122
57	1	Lipseal, NBR (standard)	9613008718	9613008718	9613008718
	1	Lipseal, EPDM	9613008711	9613008711	9613008711
	1	Lipseal, HNBR	9613008714	9613008714	9613008714
	1	Lipseal, FPM	9613008713	9613008713	9613008713
67	2	O-ring, EPDM	9611993119	9611993119	9611993119
71	2	O-ring, EPDM	9611993119	9611993119	9611993119
74	1	Seal ring, NBR (Standard)	9613095215	9613095216	9613095224
	1	Seal ring, EPDM	9613095209	9613095212	9613095223
	1	Seal ring, HNBR	9613095207	9613095210	9613095221
	1	Seal ring, FPM - Alfa Laval recommends EPDM	9613095208	9613095211	9613095222
76	1	O-ring, NBR (Standard)	9611993637	9611993641	9611993645
	1	O-ring, EPDM	9611993636	9611993640	9611993644
	1	O-ring, HNBR	9611993639	9611993643	9611993647
	1	O-ring, FPM	9611993638	9611993642	9611993646
77	1	Lip seal, NBR (Standard)	9613008546	9613008547	9613008537
	1	Lip seal, EPDM	9613008526	9613008531	9613008536
	1	Lip seal, HNBR	9613008529	9613008534	9613008539
	1	Lip seal, FPM	9613008528	9613008533	9613008538
78	1	O-ring, EPDM	9611993651	9611993652	9611994114

NOTE!

All FPM service kits are supplied with EPDM seal ring, pos. 74.

900-549/10

1.7

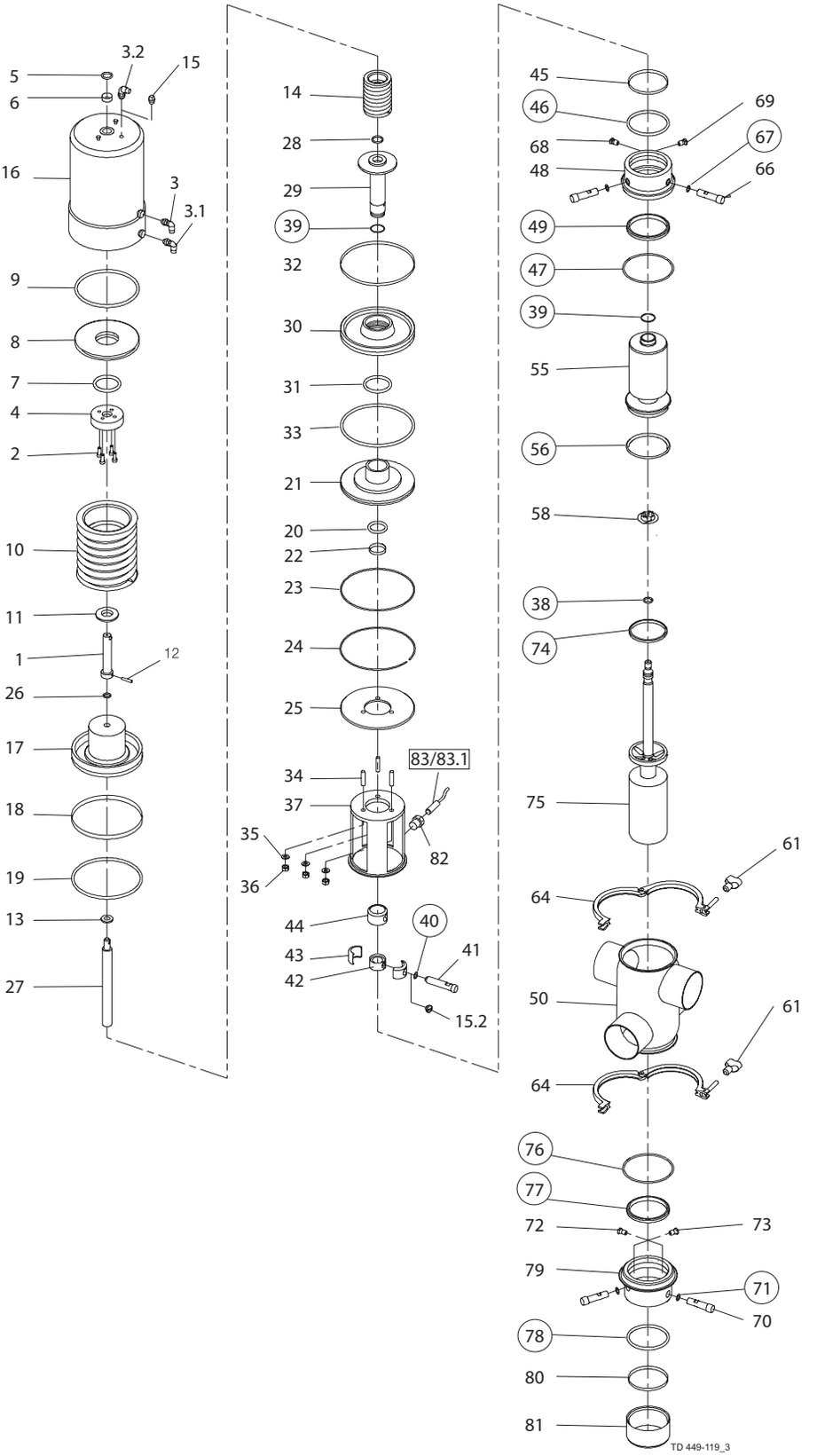
5
6
3.2
15
16
3
3.1
9
8
7
4
2
10
11
1
12
26
17
18
19
13
27
14
28
29
39
32
30
31
33
21
20
22
23
24
25
34
37
35
36
83/83.1
82
44
40
43
41
42
15.2
45
46
69
68
67
48
66
49
47
39
55
56
58
38
74
75
61
64
50
61
64
76
77
72
73
79
71
70
78
80
81
TD 449-119_3

Parts

Pos		Qty	Denomination	PMO 2" Seat ø81.3	PMO 2½" Seat ø115.3	PMO 3" Seat ø115.3	PMO 4" Seat ø143.9
1		1	Upper stem	9613010102	9613007401	9613007401	9613007402
2		4	Screw		9611993342	9611993342	9611993342
3		1	Air fitting, yellow	9611994171	9611994171	9611994171	9611994171
3.1		1	Air fitting, blue	9611993780	9611993780	9611993780	9611993780
3.2		1	Air fitting, red	9611994172	9611994172	9611994172	9611994172
4		1	Stop for upper piston		9613005301	9613005301	9613005302
5	•	1	O-ring, NBR	9611993499	9611993499	9611993499	9611993499
6	•	1	Guide ring, Turcite	9613008408	9613008408	9613008408	9613008408
7	•	1	O-ring, NBR		9611993514	9611993514	9611993514
8		1	Upper piston		9613005601	9613005601	9613005602
9	•	1	O-ring, NBR		9611993512	9611993512	9611993513
10		1	Spring assembly	9613012501	9613007501	9613007501	9613025603
11		1	Distance spacer	9613010202			
12		1	Pin	9611994197	9611994198	9611994198	9611994199
13		1	Washer	9611993594	9611993595	9611993595	9611993596
14		1	Spring assembly	9613013102	9613009502	9613009502	9613009502
15		1	Plug	9613080601	9613080601	9613080601	9613080601
16		1	Cylinder (3A marking)	9613012606	9613005106	9613005106	9613015011
17		1	Main piston	9613013201	9613005701	9613005701	9613015901
18	•	1	Guide ring, Turcite	9613008409	9613008410	9613008410	9613008411
19	•	1	O-ring, NBR	9611993505	9611993507	9611993507	9611993509
20	•	1	O-ring, NBR	9611993503	9611993607	9611993607	9611993607
21		1	Bottom	9613014001	9613005401	9613005401	9613016801
22	•	1	Guide ring, Turcite	9613008403	9613008404	9613008404	9613008404
23	•	1	O-ring, NBR	9611992228	9611991489	9611991489	22340675
24		1	Retaining ring	9613024802	9613024803	9613024803	9613024804
25		1	Cover disk	9613005802	9613005803	9613005803	9613005804
26	•	1	O-ring, NBR	9611993528	9611993495	9611993495	9611993530
27		1	Inner stem	9613010603	9613007303	9613007303	9613007302
28	•	1	O-ring	9611993495	9611990030	9611990030	9611990030
29		1	Piston rod	9613013402	9613006002	9613006002	9613006002
30		1	Lower piston	9613013801	9613005501	9613005501	9613016601
31	•	1	O-ring, NBR	42153	42153	42153	42153
32	•	1	Guide ring, Turcite	9613008405	9613008406	9613008406	9613008407
33	•	1	O-ring, NBR	22341275	9611993508	9611993508	9611993510
34		3	Bolt	9611993618	9611993618	9611993618	9611993618
35		3	Washer	9611993594	9611993594	9611993594	9611993594
36		3	Nut	9611990360	9611990360	9611990360	9611990360
41		1	Flushing tube	3135710172	3135710172	3135710172	3135710172
42		1	Spindle liner	9613033501	9613009001	9613009001	9613009001
43		2	Clamp	9613033601	9613009201	9613009201	9613009201
44		1	Lock	9613009102	9613009101	9613009101	9613009101

Actuator diameter	Ø120	Ø157	Ø186
Actuator type	3	4BS	4SS, 5BS, 5SS
Connection size*	DN/OD 2"*	DN/OD 2½-3"*	DN/OD 4"*
• Actuator service kit, part no.	9611926414	9611926415	9611926416

Pos		Qty	Denomination				
45		1	Guide ring, PTFE	9613008414	9613008415	9613008415	9613008421
48		1	Upper sealing element	9613049202	9613049302	9613049302	9613071401
55		1	Upper plug	9613070102	9613070202	9613070204	9613070402
58		1	Spray nozzle, PTFE	9613014801	9613014801	9613014801	9613014801
61		2	Wingnut	9612558001	9612558001	9612558001	9612558001
64		2	Clamp without nut	9613021601	9613021701	9613021701	9613021801
66		2	Flushing tube	9613007903	9613007904	9613007904	9613007905
68		1	Drain	9613008001	9613008001	9613008001	9613008001
69		1	Nozzle	9613008002	9613008002	9613008002	9613008002
70		2	Flushing tube	9613007903	9613007904	9613007904	9613007905
72		1	Drain	9613008001	9613008001	9613008001	9613008001
73		1	Nozzle	9613008002	9613008002	9613008002	9613008002
75		1	Lower plug	9613070502	9613070602	9613070702	9613070802
79		1	Lower sealing element	9613049602	9613049702	9613049702	9613071601
80		1	Guide ring, PTFE	9613008414	9613008415	9613008415	9613008421
81		1	Cover	9613049006	9613049007	9613049007	9613049016
82		1	Bolt for indication	9613092604	9613092604	9613092604	9613092604
83		1	Sensor for indication	9611995770	9611995770	9611995770	9611995770
83.1		1	Cable for sensor for indication	9611994915	9611994915	9611994915	9611994915
84		1	Plate for sensor for indication	9613095701	9613095701	9613095701	9613095701

1.7

Parts

Pos	Qty	Denomination	PMO 2" Seat ø81.3	PMO 2½" Seat ø115.3	PMO 3" Seat ø115.3	PMO 4" Seat ø143.9
37	1	Intermediate piece	9613019122	9613019216	9613019214	9613019318
50	1	Valve body, 11-00	9613070901	9613071001	9613071101	9613071201
	1	Valve body, 12-00	9613070905	9613071005	9613071105	9613071205
	1	Valve body, 21-00	9613070907	9613071007	9613071107	9613071207
	1	Valve body, 22-00	9613070909	9613071009	9613071109	9613071209
	1	Valve body, 11-90	9613070902	9613071002	9613071102	9613071202
	1	Valve body, 12-90	9613070906	9613071006	9613071106	9613071206
	1	Valve body, 21-90	9613070908	9613071008	9613071108	9613071208
	1	Valve body, 22-90	9613070910	9613071010	9613071110	9613071210
	1	Valve body, 11-180	9613070903	9613071003	9613071103	9613071203
	1	Valve body, 11-270	9613070904	9613071004	9613071104	9613071204

900-549/9

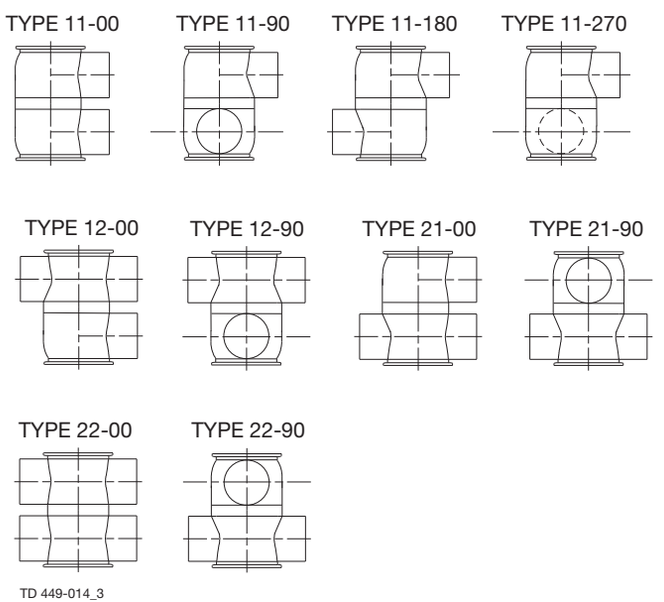

TD 449-014_3

Service kits for Product Wetted Parts

Plug set-up

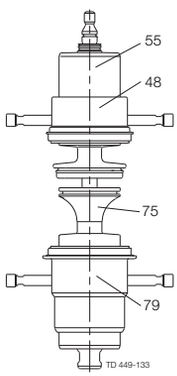

(Plug set-up 6)

PMO 2"

Service kit, NBR	9611926004
Service kit, EPDM	9611926001
Service kit, HNBR	9611926010
Service kit, FPM	9611926007

PMO 2.5"+3"

Service kit, NBR	9611926005
Service kit, EPDM	9611926002
Service kit, HNBR	9611926011
Service kit, FPM	9611926008

PMO 4"

Service kit, NBR	9611926006
Service kit, EPDM	9611926003
Service kit, HNBR	9611926012
Service kit, FPM	9611926009

NOTE!
All FPM service kits are supplied with EPDM seal ring, pos. 74.

900-549/10

Installation Kit B

1.7

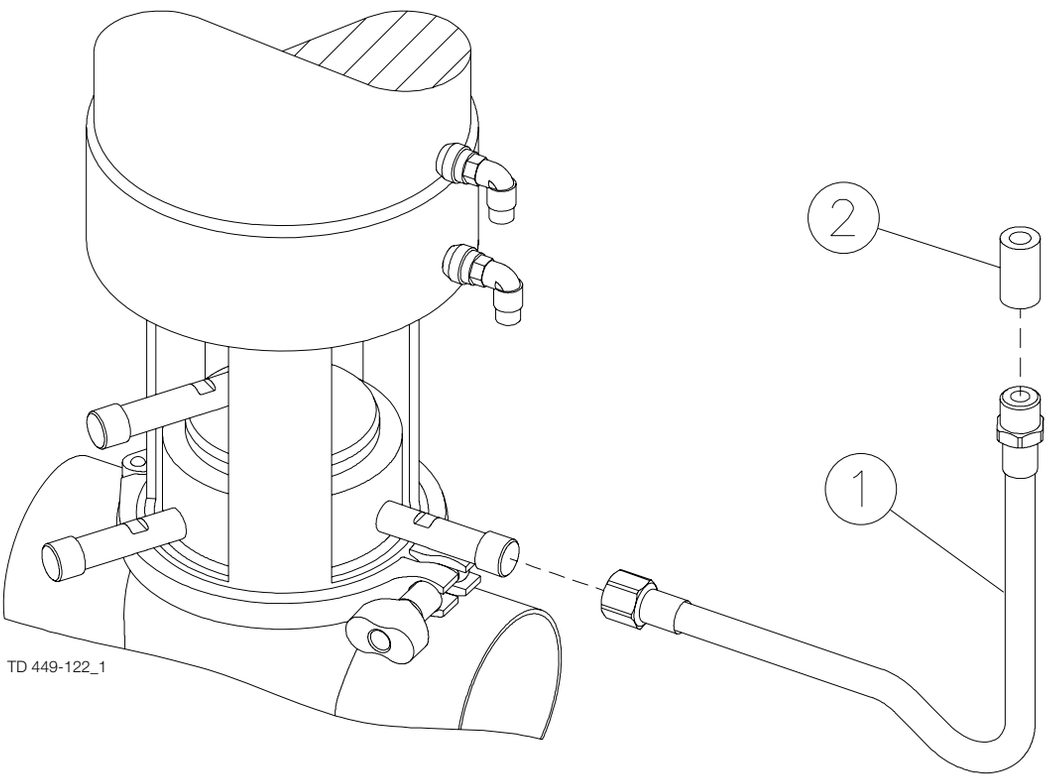

Installation Kit B

Pos	Qty	Denomination	3135707466
1	1	Hose PTFE w. s.s. weave	3135707451
2	1	Welding socket	9611990917

900-111/1

Installation Kit C

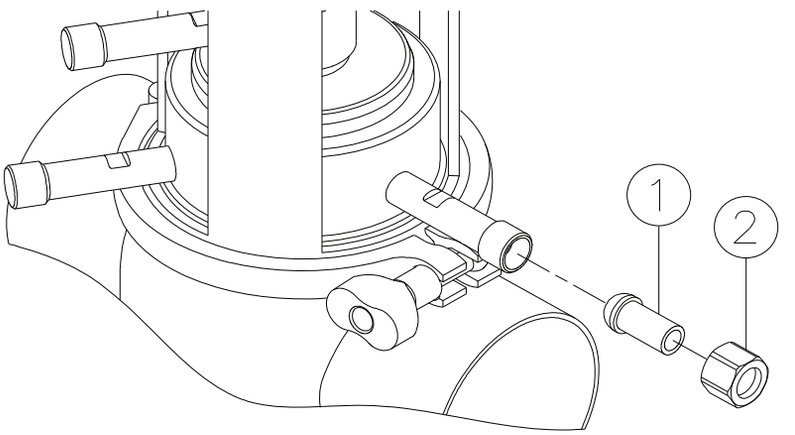

TD 449-150_1

Installation Kit C

Pos	Qty	Denomination	3135710053
1	1	Welding liner	3135707431
2	1	Nut	3135707441

900-112/1

Installation Kit G

1.7

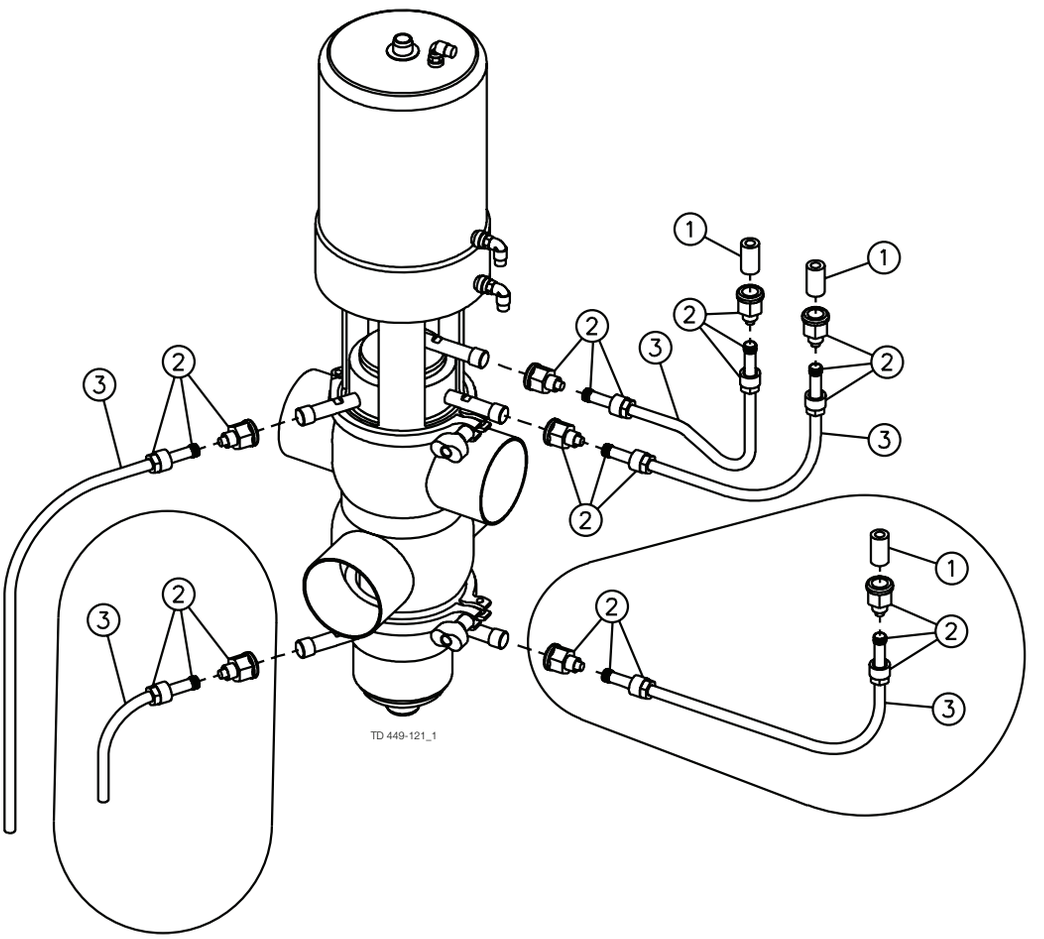

Installation Kit G

Installation kit G1

Pos	Qty	Denomination	9613055701
1	1	Welding male part, AISI 316	3135707471
2	2	3/8" 10 mm Female PVDF	9611992372
3	1	10 mm PVDF hose, 1m	9611992607

Installation kit G2

Pos	Qty	Denomination	9613055702
2	1	3/8" 10 mm Female PVDF	9611992372
3	1	10 mm PVDF hose, 1m	9611992607

900-113/1

Installation Kit H and B

1.7

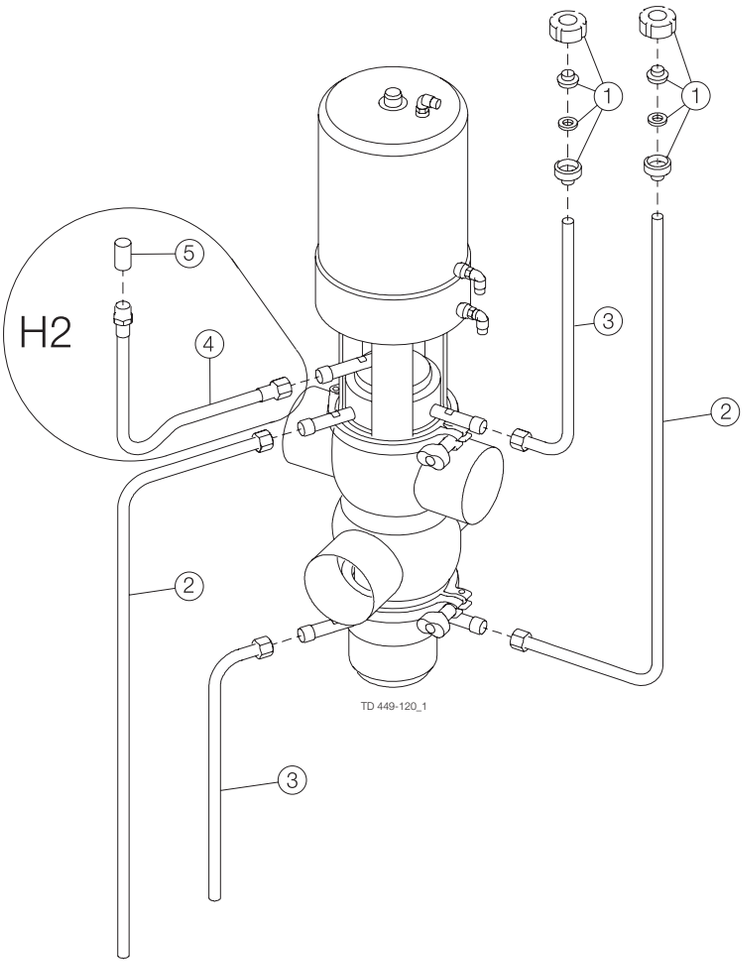

Installation Kit H and B

Installation kit H

Pos	Qty	Denomination	9613055703
1	1	DIN union DN10	9611305791
	1	Nut, DN10	9611306420
	1	Welding liner DIN, DN10	9611305950
	1	Packing NBR, DN10	52734601
	1	Male part DIN, DN10	9611305900
2	1	12 mm CIP pipe long	3135710014
3	1	12 mm CIP pipe	3135710013

Installation kit B

Pos	Qty	Denomination	3135707466
4	1	Hose PTFE w. s.s. weave	3135707451
5	1	Welding socket	9611990917

900-114/1

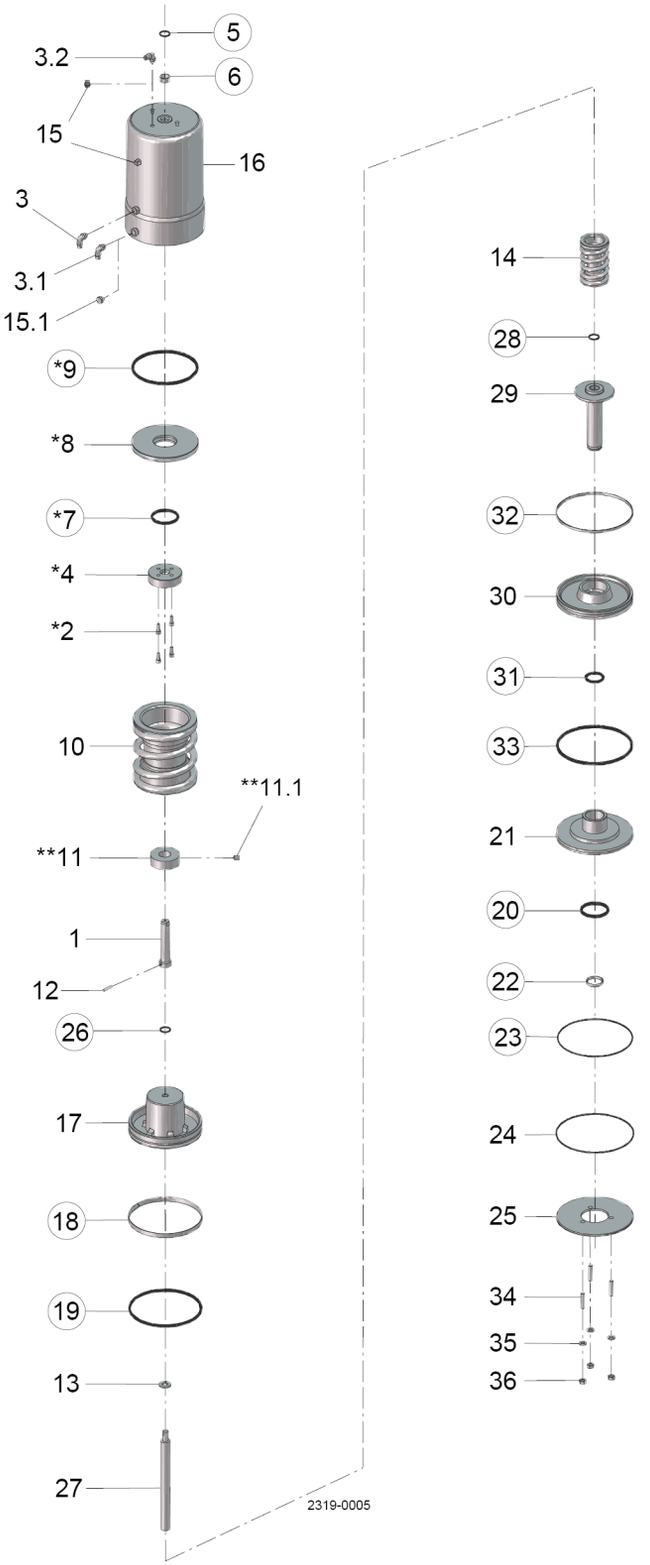

◯ = acuator service kit
* = not used in actuator 1½" - 2"
** = not used in actuator 2½", 3", 4 and 6"

Pos	Qty	Denomination	1½" Seat ø53.3	2" Seat ø53.3	2½" Seat ø81.3	3" Seat ø81.3	4" Seat ø100.3
Complete actuators - dairy applications							
		Blasted, no seat-lift	9613055481	9613055481	9613099546	9613099546	9613083782
		Blasted, both seat-lift	9613055484	9613055484	9613099549	9613099549	9613083785
		Polished, no seat-lift	9613055485	9613055485	9613099550	9613099550	9613083786
		Polished, both seat-lift	9613055488	9613055488	9613099553	9613099553	9613083789
Complete actuators - non dairy applications							
		Blasted, no seat-lift	9613055489	9613055489	9613099554	9613099554	9613083790
		Blasted, both seat-lift	9613055492	9613055492	9613099557	9613099557	9613083793
		Polished, no seat-lift	9613055493	9613055493	9613099558	9613099558	9613083794
		Polished, both seat-lift	9613055496	9613055496	9613099561	9613099561	9613083797

Pos		Qty	Denomination	1½" Seat ø53.3	2" Seat ø53.3	2½" Seat ø81.3	3" Seat ø81.3	4" Seat ø100.3
1		1	Upper stem	9613010102	9613010102	9613007401	9613007401	9613007402
2		4	Screw			9611993342	9611993342	9611993342
3		1	Kit, air fitting and label, (blue, ThinkTop)	9611926026	9611926026	9611926026	9611926026	9611926026
		1	Kit, air fitting and label, (white, Thinktop V-Series)	8010000754	8010000754	8010000754	8010000754	8010000754
3.1		1	Kit, air fitting and label, (red, ThinkTop)	9611926028	9611926028	9611926028	9611926028	9611926028
		1	Kit, air fitting and label, (blue, Thinktop V-Series)	9611926026	9611926026	9611926026	9611926026	9611926026
3.2		1	Kit, air fitting and label, (yellow)	9611926027	9611926027	9611926027	9611926027	9611926027
4		1	Stop for upper piston			9613005301	9613005301	9613005302
5	□	1	O-ring, NBR	9611993499	9611993499	9611993499	9611993499	9611993499
6	□	1	Guide ring, Turcite	9613008408	9613008408	9613008408	9613008408	9613008408
7	□	1	O-ring, NBR			9611993514	9611993514	9611993514
8		1	Upper piston			9613005601	9613005601	9613005602
9	□	1	O-ring, NBR			9611993512	9611993512	9611993513
10		1	Spring assembly	9613012501	9613012501	9613007501	9613007501	9613025603
11		1	Distance spacer	9613010202	9613010202			
11.1		1	Screw	9611991763	9611991763			
12		1	Pin	9611994197	9611994197	9611994198	9611994198	9611994199
13		1	Washer	9611993594	9611993594	9611993595	9611993595	9611993596
14		1	Spring assembly	9613013101	9613013101	9613009502	9613009502	9613009502
15		2	Plug	9613414101	9613414101	9613414101	9613414101	9613414101
15.1		1	Plug	9611993709	9611993709	9611993709	9611993709	9611993709
17		1	Main piston	9613013201	9613013201	9613005701	9613005701	9613015901
18	□	1	Guide ring, Turcite	9613008409	9613008409	9613008410	9613008410	9613008411
19	□	1	O-ring, NBR	9611993505	9611993505	9611993507	9611993507	9611993509
20	□	1	O-ring, NBR	9611993503	9611993503	9611993607	9611993607	9611993607
21		1	Bottom	9613014001	9613014001	9613005401	9613005401	9613016801
22	□	1	Guide ring, Turcite	9613008403	9613008403	9613008404	9613008404	9613008404
23	□	1	O-ring, NBR	9611992228	9611992228	9611991489	9611991489	22340675
24		1	Retaining ring	9613024802	9613024802	9613024803	9613024803	9613024804
25		1	Cover disk	9613005802	9613005802	9613005803	9613005803	9613005804
26		1	O-ring, NBR	9611993528	9611993528	9611993495	9611993495	9611993530
27		1	Inner stem	9613010602	9613010602	9613007301	9613007301	9613007302
28	□	1	O-ring	9611993495	9611993495	9611990030	9611990030	9611990030
29		1	Piston rod	9613013401	9613013401	9613006001	9613006001	9613006002
30		1	Lower piston	9613013801	9613013801	9613005501	9613005501	9613016601
31	□	1	O-ring, NBR	42153	42153	42153	42153	42153
32	□	1	Guide ring, Turcite	9613008405	9613008405	9613008406	9613008406	9613008407
33	□	1	O-ring, NBR	22341275	22341275	9611993508	9611993508	9611993510
34		3	Bolt	9611993618	9611993618	9611993618	9611993618	9611993618
35		3	Washer	9611993594	9611993594	9611993594	9611993594	9611993594
36		3	Nut	9611990360	9611990360	9611990360	9611990360	9611990360

900672/3

		1½" Seat ø53.3	2" Seat ø53.3	2½" Seat ø81.3	3" Seat ø81.3	4" Seat ø100.3
Service kits						
□	Actuator service kit	9611926414	9611926414	9611926415	9611926415	9611926416

Plug setup 3

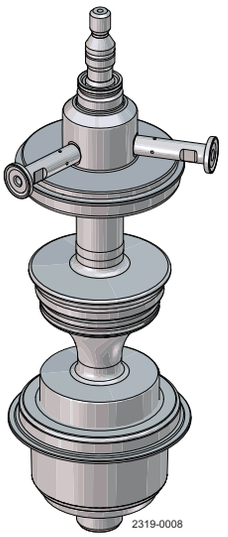

Upper: Unbalanced with SpiralClean OD spindle
Lower: Balanced (blue bottom)
See page

Plug setup 4

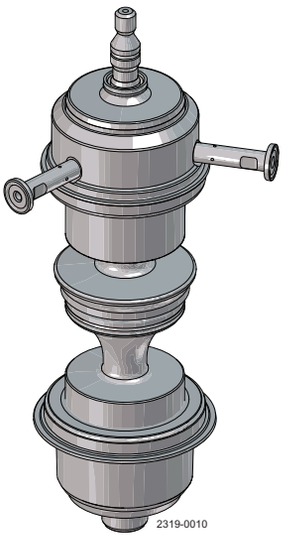

Upper: Balanced with SpiralClean OD balancer
Lower: Balanced (blue bottom)
See page

Plug setup 5

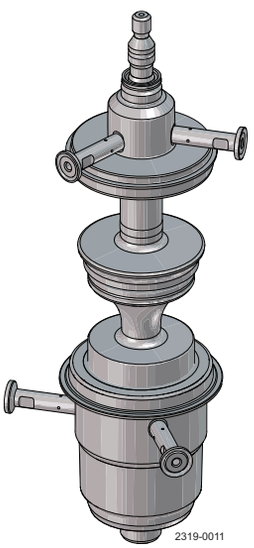

Upper: Unbalanced with SpiralClean OD spindle
Lower: Balanced with SpiralClean OD balancer (blue bottom)
See page

Plug setup 6

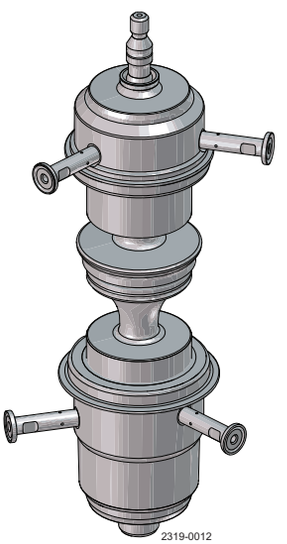

Upper: Balanced with SpiralClean OD balancer
Lower: Balanced with SpiralClean OD balancer (blue bottom)
See page

1.7

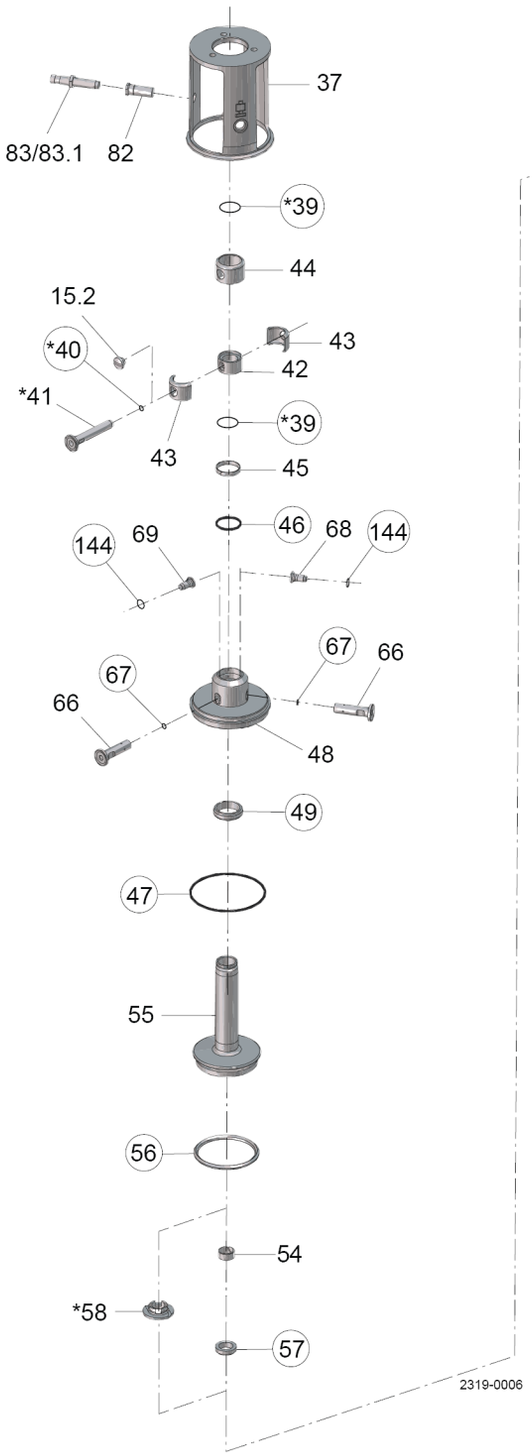

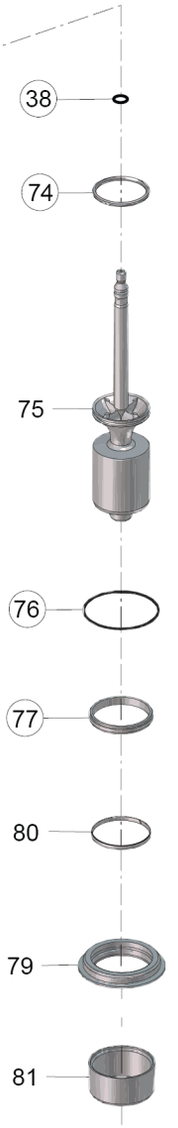

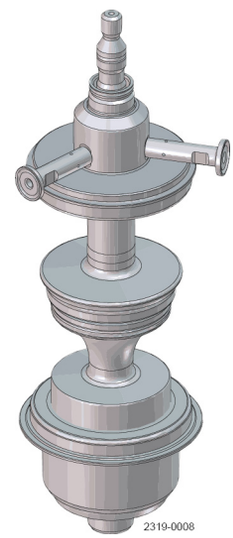

◯ = wear parts

★ = with SpiralClean in leakage chamber

Pos		Qty	Denomination	2”	2½”	3”	4”
Intermediate parts							
37		1	Intermediate piece	9614255902	9614256302	9614256304	9614256702
82		1	Bolt for indication	9614257508	9614257508	9614257508	9614257508
83		1	Sensor for indication	9611995199	9611995199	9611995199	9611995199
83.1		1	Cable for sensor for indication	9611994915	9611994915	9611994915	9611994915
Spindle liner							
15.2		1	Plug	9615331901	9615331901	9615331901	9615331901
42		1	Spindle liner	9614221101	9614205301	9614205301	9614205301
43		2	Clamp	9613011801	9613009201	9613009201	9613009201
44		1	Lock	9613011701	9613009101	9613009101	9613009101
Extra parts if SpiralClean in leakage chamber							
39		2	O-ring, EPDM	9611993492	9611993493	9611993493	9611993493
40		1	O-ring, EPDM	9611995521	9611995521	9611995521	9611995521
41		1	Flushing tube	9614205401	9614205402	9614205402	9614205403
58		1	Spray nozzle, PVDF	9614221301	9614221201	9614221201	9614221201
Upper sealing element							
45		1	Guide ring, PTFE	9613008416	9613008417	9613008417	9613008417
46	♦	1	O-ring, EPDM	9611993653	9611993654	9611993654	9611993654
47	♦	1	O-ring, EPDM	9611993632	9611993636	9611993636	9611993640
	♦	1	O-ring, NBR	9611993633	9611993637	9611993637	9611993641
	♦	1	O-ring, FPM	9611993634	9611993638	9611993638	9611993642
	♦	1	O-ring, HNBR	9611993635	9611993639	9611993639	9611993643
48		1	Upper sealing element, (blasted/Ra1.6)	9614220201	9614220301	9614220301	9614220401
		1	Upper sealing element, (polished/Ra0.8)	9614220202	9614220302	9614220302	9614220402
49	♦	1	Lip seal, EPDM	9613008501	9613008511	9613008511	9613008511
	♦	1	Lip seal, NBR	9613008502	9613008512	9613008512	9613008512
	♦	1	Lip seal, FPM	9613008503	9613008513	9613008513	9613008513
	♦	1	Lip seal, HNBR	9613008504	9613008514	9613008514	9613008514
66		2	Flushing tube	9614205802	9614205803	9614205803	9614205804
67	♦	2	O-ring, EPDM	9611995523	9611995523	9611995523	9611995523
68		1	Drain	8010000689	8010000689	8010000689	8010000689
69		1	Nozzle	8010000688	8010000688	8010000688	8010000688
144	♦	2	O-ring, EPDM	8010000690	8010000690	8010000690	8010000690
Upper plug							
54		1	Guide ring, PTFE	9613008401	9613008402	9613008402	9613008402
55		1	Upper plug	9614233102	9614234002	9614234002	9614234502
56	♦	1	Seal ring, EPDM	9613095106	9613095109	9613095109	9613095119
	♦	1	Seal ring, NBR	9613095114	9613095115	9613095115	9613095120
	♦	1	Seal ring, FPM	9613095105	9613095108	9613095108	9613095118
		1	Seal ring set, (10 pcs.) EPDM	8010023165	8010023166	8010023166	8010023167
	♦	1	Seal ring, HNBR	9613095104	9613095107	9613095107	9613095117
57	♦	1	Lip seal, EPDM	9613008706	9613008711	9613008711	9613008711
	♦	1	Lip seal, NBR	9613008707	9613008712	9613008712	9613008712
	♦	1	Lip seal, FPM	9613008708	9613008713	9613008713	9613008713
	♦	1	Lip seal, HNBR	9613008709	9613008714	9613008714	9613008714

1.7

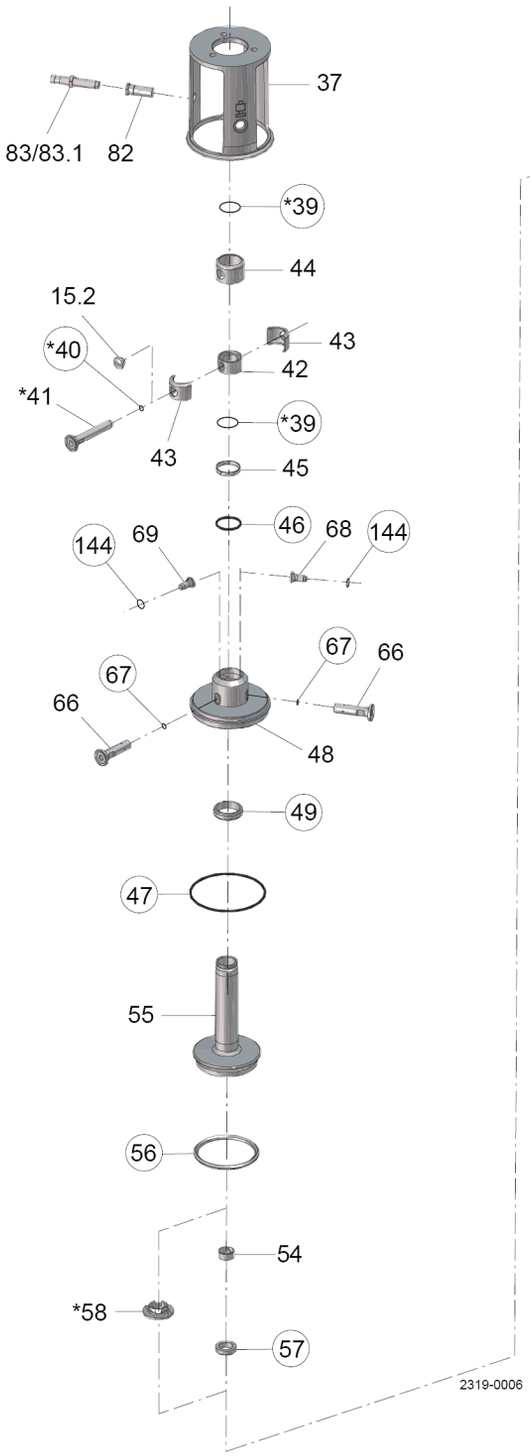

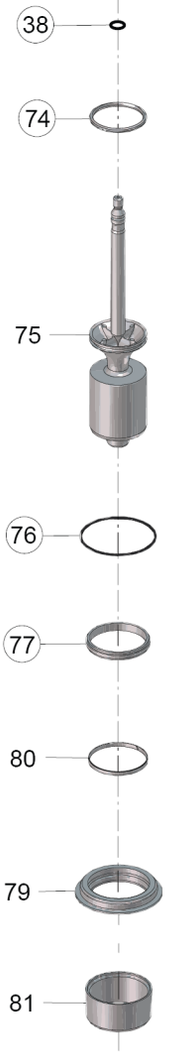

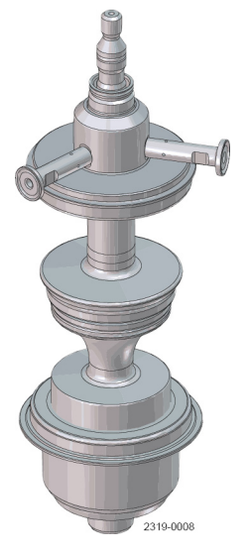

◯ = wear parts

✶ = with SpiralClean in leakage chamber

Pos		Qty	Denomination	2”	2½”	3”	4”
Lower plug							
38	♦	1	O-ring, EPDM	9611993555	9611993572	9611993572	9611993572
		1	O-ring set, (10 pcs.) EPDM	8010023163	8010023164	8010023164	8010023164
74	♦	1	Seal ring, EPDM	9613095206	9613095209	9613095209	9613095219
	♦	1	Seal ring, NBR	9613095214	9613095215	9613095215	9613095220
	♦	1	Seal ring, FPM - Alfa Laval recommends EPDM	9613095205	9613095208	9613095208	9613095218
	♦	1	Seal ring, HNBR	9613095204	9613095207	9613095207	9613095217
		1	Seal ring set, (10 pcs.) EPDM	8010023169	8010023170	8010023170	8010023171
75		1	Lower plug	9614202939	9614201603	9614201603	9614217823
Lower sealing element							
76	♦	1	O-ring, EPDM	9611993632	9611993636	9611993636	9611993640
	♦	1	O-ring, NBR	9611993633	9611993637	9611993637	9611993641
	♦	1	O-ring, FPM	9611993634	9611993638	9611993638	9611993642
	♦	1	O-ring, HNBR	9611993635	9611993639	9611993639	9611993643
77	♦	1	Lip seal, EPDM	9613008521	9613008526	9613008526	9613008548
	♦	1	Lip seal, NBR	9613008522	9613008527	9613008527	9613008549
	♦	1	Lip seal, FPM	9613008523	9613008528	9613008528	9613008550
	♦	1	Lip seal, HNBR	9613008524	9613008529	9613008529	9613008551
79		1	Lower sealing element, (blasted/Ra1.6)	9613023902	9613024102	9613024102	9613066201
		1	Lower sealing element, (polished/Ra0.8)	9613023904	9613024104	9613024104	9613066202
80		1	Guide ring, PTFE	9613008413	9613008414	9613008414	9613008420
81		1	Cover	9613049005	9613049006	9613049006	9613049015
Extra parts if clamped valve body							
52		1	O-ring, EPDM	9611993632	9611993636	9611993636	9611993640
		1	O-ring, NBR	9611993633	9611993637	9611993637	9611993641
		1	O-ring, FPM	9611993634	9611993638	9611993638	9611993642
		1	O-ring, HNBR	9611993635	9611993639	9611993639	9611993643

NOTE!
If clamped valve body an extra O-ring (pos. 52) is required.
If SpiralClean in leakage chamber, extra O-rings (2x pos. 39 and 1x pos. 40) is required.
Spare parts for mix size please refer to configurator in Alfa Laval Anytime

NOTE!
All FPM service kits are supplied with EPDM seal ring, pos. 74.

Service kits

		2” seat ø53.3	2½” seat ø81.3	3” seat ø81.3	4” seat ø100.3
♦	**Service kit, EPDM**	9611928001	9611928005	9611928005	9611928009
♦	**Service kit, NBR**	9611928002	9611928006	9611928006	9611928010
♦	**Service kit, FPM**	9611928003	9611928007	9611928007	9611928011
♦	**Service kit, HNBR**	9611928004	9611928008	9611928008	9611928012

For mixed size housings, the service kit is determined by the smallest size connection on the valve.

NOTE!
All FPM service kits are supplied with EPDM seal ring, pos. 74.

1.7

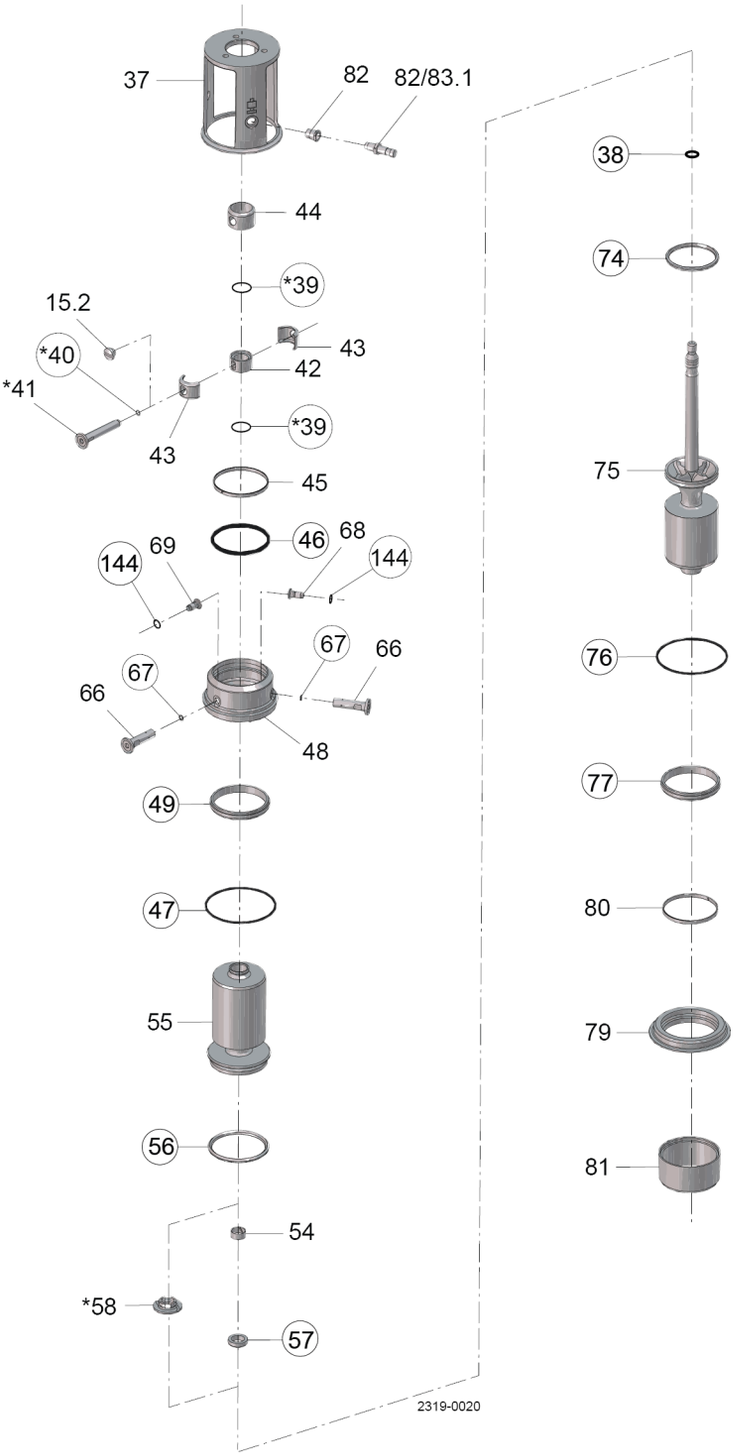

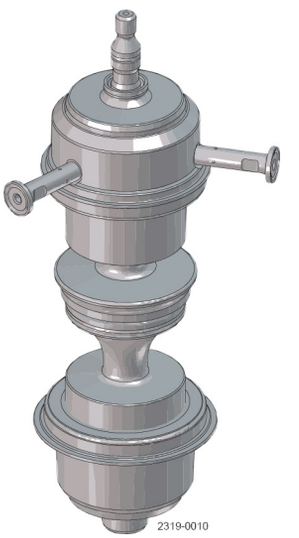

◯ = wear parts

✶ = with SpiralClean in leakage chamber

Pos		Qty	Denomination	1½"	2"	2½"	3"	4"
Intermediate parts								
37		1	Intermediate piece	9614255502	9614255902	9614256302	9614256304	9614256702
82	Δ	1	Bolt for indication	9614257508	9614257508	9614257508	9614257508	9614257508
83	Δ	1	Sensor for indication	9611995770	9611995770	9611995770	9611995770	9611995770
83.1		1	Cable for sensor for indication	9611994915	9611994915	9611994915	9611994915	9611994915
Spindle liner								
15.2		1	Plug	9615331901	9615331901	9615331901	9615331901	9615331901
42		1	Spindle liner	9614221101	9614221101	9614205301	9614205301	9614205301
43		2	Clamp	9613011801	9613011801	9613009201	9613009201	9613009201
44		1	Lock	9613011701	9613011701	9613009101	9613009101	9613009101
Extra parts if SpiralClean in leakage chamber								
39		2	O-ring, EPDM	9611993492	9611993492	9611993493	9611993493	9611993493
40		1	O-ring, EPDM	9611995521	9611995521	9611995521	9611995521	9611995521
41		1	Flushing tube	9614205401	9614205401	9614205402	9614205402	9614205403
58		1	Spray nozzle, PVDF	9614221301	9614221301	9614221201	9614221201	9614221201
Upper sealing element								
45		1	Guide ring	9613008412	9613008413	9613008414	9613008414	9613008420
46	♦	1	O-ring, EPDM	9611993655	9611993650	9611993651	9611993651	9611994407
47	♦	1	O-ring, EPDM	9611993628	9611993632	9611993636	9611993636	9611993640
	♦	1	O-ring, NBR	9611993629	9611993633	9611993637	9611993637	9611993641
	♦	1	O-ring, FPM	9611993630	9611993634	9611993638	9611993638	9611993642
	♦	1	O-ring, HNBR	9611993631	9611993635	9611993639	9611993639	9611993643
48		1	Upper sealing element, (blasted/Ra1.6)	9614220101	9614219801	9614205901	9614205901	9614219901
		1	Upper sealing element, (polished/Ra0.8)	9614220102	9614219802	9614205902	9614205902	9614219902
49	♦	1	Lip seal, EPDM	9613008516	9613008521	9613008526	9613008526	9613008548
	♦	1	Lip seal, NBR	9613008517	9613008522	9613008527	9613008527	9613008549
	♦	1	Lip seal, FPM	9613008518	9613008523	9613008528	9613008528	9613008550
	♦	1	Lip seal, HNBR	9613008519	9613008524	9613008529	9613008529	9613008551
66		2	Flushing tube	9614205801	9614205802	9614205803	9614205803	9614205804
67	♦	2	O-ring, EPDM	9611995523	9611995523	9611995523	9611995523	9611995523
68		1	Drain	8010000689	8010000689	8010000689	8010000689	9614205701
69		1	Nozzle	8010000688	8010000688	8010000688	8010000688	9614205601
144	♦	2	O-ring, EPDM	8010000690	8010000690	8010000690	8010000690	8010000690
Upper plug								
54		1	Guide ring, PTFE	9613008401	9613008401	9613008402	9613008402	9613008402
55		1	Upper plug	9614232502	9614233110	9614234008	9614234008	9614234506
56	♦	1	Seal ring, EPDM	9613095106	9613095106	9613095109	9613095109	9613095119
	♦	1	Seal ring, NBR	9613095114	9613095114	9613095115	9613095115	9613095120
	♦	1	Seal ring, FPM	9613095105	9613095105	9613095108	9613095108	9613095118
	♦	1	Seal ring, HNBR	9613095104	9613095104	9613095107	9613095107	9613095117
		1	Seal ring set, (10 pcs.) EPDM	8010023165	8010023165	8010023166	8010023166	8010023167
57	♦	1	Lip seal, EPDM	9613008706	9613008706	9613008711	9613008711	9613008711
	♦	1	Lip seal, NBR	9613008707	9613008707	9613008712	9613008712	9613008712
	♦	1	Lip seal, FPM	9613008708	9613008708	9613008713	9613008713	9613008713
	♦	1	Lip seal, HNBR	9613008709	9613008709	9613008714	9613008714	9613008714

1.7

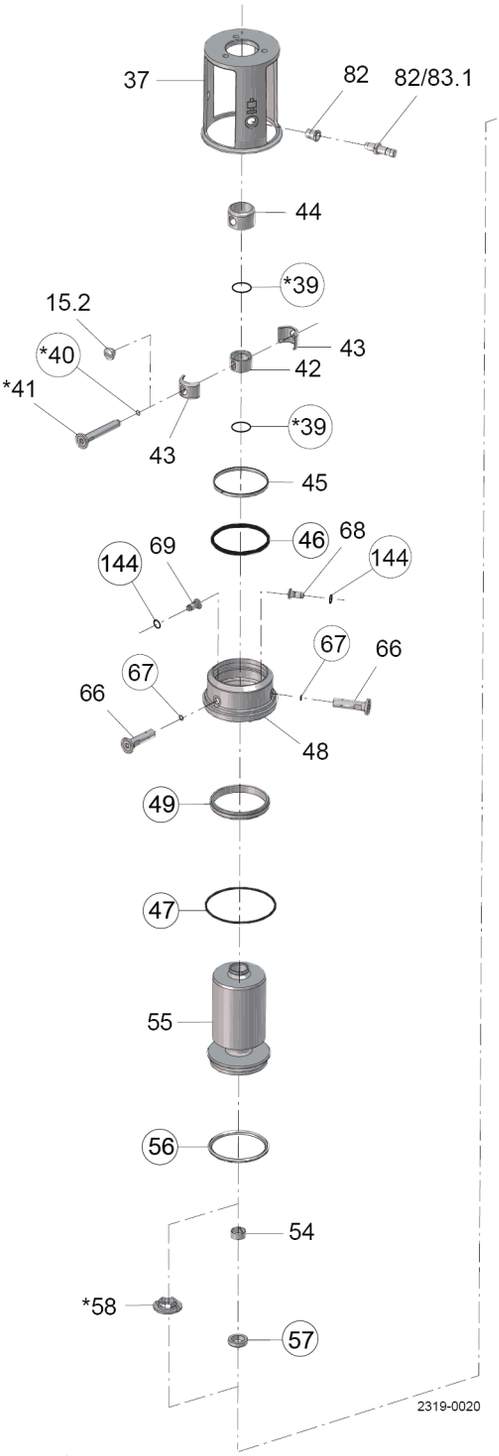

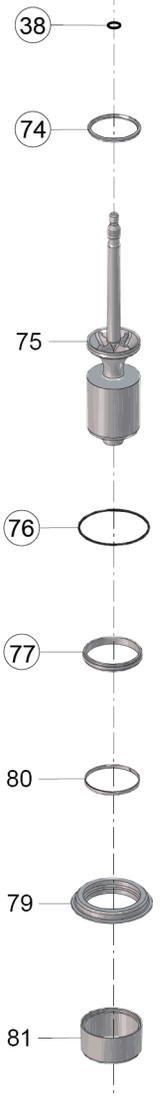

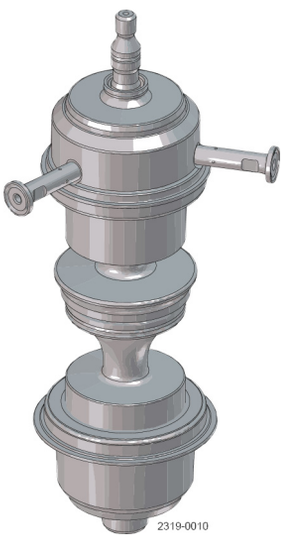

◯ = wear parts

★ = with SpiralClean in leakage chamber

Pos		Qty	Denomination	1½"	2"	2½"	3"	4"
Lower plug								
38	♦	1	O-ring, EPDM	9611993555	9611993555	9611993572	9611993572	9611993572
		1	O-ring set, (10 pcs.) EPDM	8010023163	8010023163	8010023164	8010023164	8010023164
74	♦	1	Seal ring, EPDM	9613095206	9613095206	9613095209	9613095209	9613095219
	♦	1	Seal ring, NBR	9613095214	9613095214	9613095215	9613095215	9613095220
	♦	1	Seal ring, FPM - Alfa Laval recommends EPDM	9613095205	9613095205	9613095208	9613095208	9613095218
	♦	1	Seal ring, HNBR	9613095204	9613095204	9613095207	9613095207	9613095217
		1	Seal ring set, (10 pcs.) EPDM	8010023169	8010023169	8010023170	8010023170	8010023171
75		1	Lower plug	9614202903	9614202939	9614201603	9614201603	9614217823
Lower sealing element								
76	♦	1	O-ring, EPDM	9611993628	9611993632	9611993636	9611993636	9611993640
	♦	1	O-ring, NBR	9611993629	9611993633	9611993637	9611993637	9611993641
	♦	1	O-ring, FPM	9611993630	9611993634	9611993638	9611993638	9611993642
	♦	1	O-ring, HNBR	9611993631	9611993635	9611993639	9611993639	9611993643
77	♦	1	Lip seal, EPDM	9613008516	9613008521	9613008526	9613008526	9613008548
	♦	1	Lip seal, NBR	9613008517	9613008522	9613008527	9613008527	9613008549
	♦	1	Lip seal, FPM	9613008518	9613008523	9613008528	9613008528	9613008550
	♦	1	Lip seal, HNBR	9613008519	9613008524	9613008529	9613008529	9613008551
79		1	Lower sealing element, (blasted/Ra1.6)	9613023701	9613023902	9613024102	9613024102	9613066201
		1	Lower sealing element, (polished/Ra0.8)	9613023702	9613023904	9613024104	9613024104	9613066202
80		1	Guide ring	9613008412	9613008413	9613008414	9613008414	9613008420
81		1	Cover	9613049001	9613049005	9613049006	9613049006	9613049015
Extra parts if clamped valve body								
52		1	O-ring, EPDM	9611993628	9611993632	9611993636	9611993636	9611993640
		1	O-ring, NBR	9611993629	9611993633	9611993637	9611993637	9611993641
		1	O-ring, FPM	9611993630	9611993634	9611993638	9611993638	9611993642
		1	O-ring, HNBR	9611993631	9611993635	9611993639	9611993639	9611993643

NOTE!
If clamped valve body an extra O-ring (pos. 52) is required.
If SpiralClean in leakage chamber extra O-rings (2x pos. 39 and 1x pos. 40) is required.
Δ Sensor service kit for valves delivered prior to October 2015 - 9611928351
Spare parts for mix size please refer to configurator in Alfa Laval Anytime

NOTE!
All FPM service kits are supplied with EPDM seal ring, pos. 74.

Service kits

		1½" Seat ø53.3	2" Seat ø53.3	2½" Seat ø81.3	3" Seat ø81.3	4" Seat ø100.3
♦	**Service kit, EPDM**	9611928017	9611928021	9611928025	9611928025	9611928029
♦	**Service kit, NBR**	9611928018	9611928022	9611928026	9611928026	9611928030
♦	**Service kit, FPM**	9611928019	9611928023	9611928027	9611928027	9611928031
♦	**Service kit, HNBR**	9611928020	9611928024	9611928028	9611928028	9611928032

For mixed size housings, the service kit is determined by the smallest size connection on the valve.

NOTE!
All FPM service kits are supplied with EPDM seal ring, pos. 74.

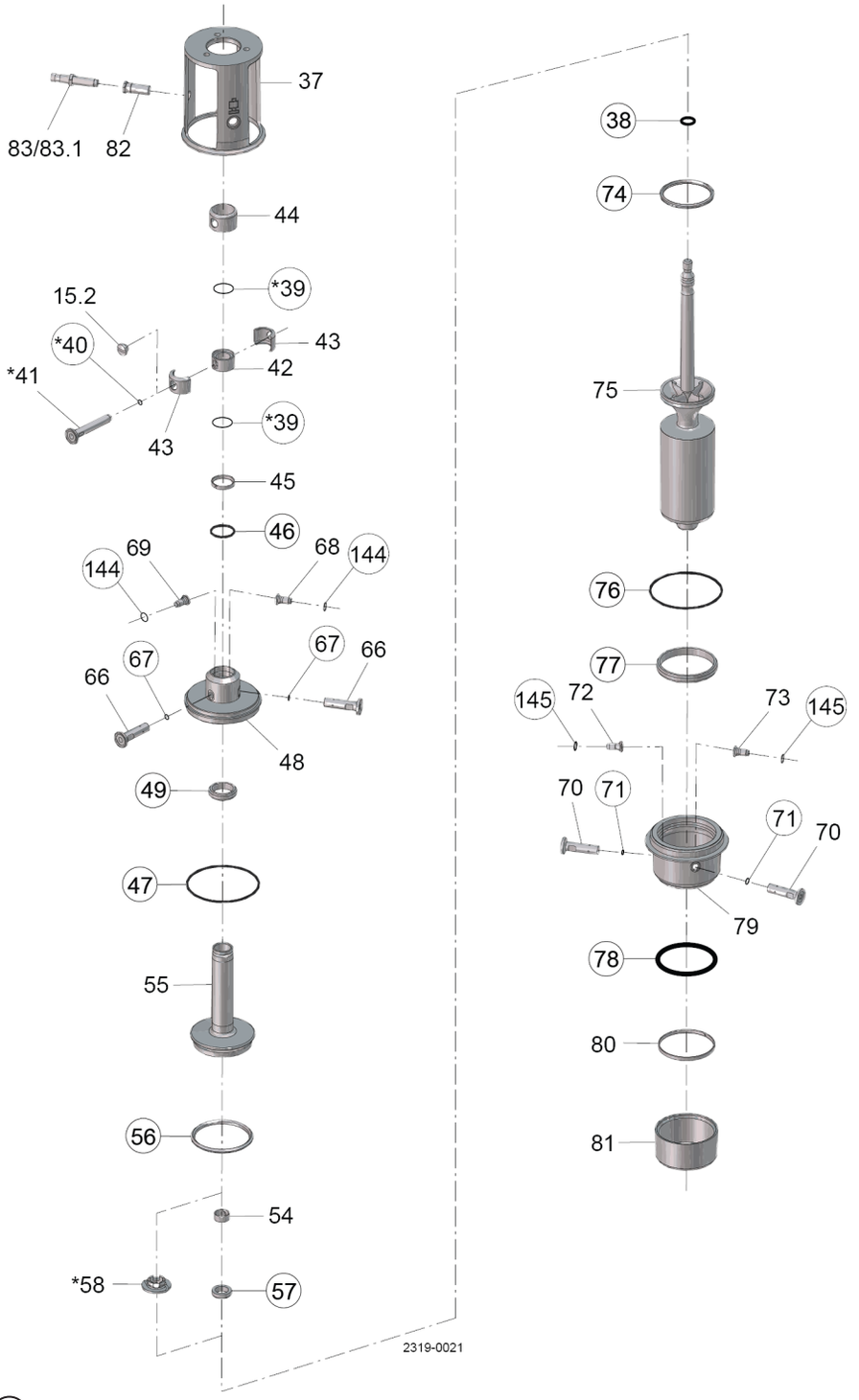

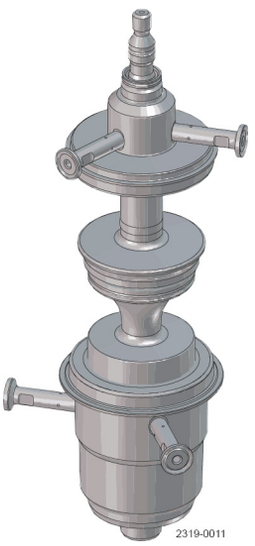

◯ = wear parts

✶ = with SpiralClean in leakage chamber

Pos		Qty	Denomination	2”	2½”	3”	4”
Intermediate parts							
37		1	Intermediate piece	9614255902	9614256302	9614256304	9614256702
82		1	Bolt for indication	9614257508	9614257508	9614257508	9614257508
83		1	Sensor for indication	9611995199	9611995199	9611995199	9611995199
83.1		1	Cable for sensor for indication	9611994915	9611994915	9611994915	9611994915
Spindle liner							
15.2		1	Plug	9615331901	9615331901	9615331901	9615331901
42		1	Spindle liner	9614221101	9614205301	9614205301	9614205301
43		2	Clamp	9613011801	9613009201	9613009201	9613009201
44		1	Lock	9613011701	9613009101	9613009101	9613009101
Extra parts if SpiralClean in leakage chamber							
39		2	O-ring, EPDM	9611993492	9611993493	9611993493	9611993493
40		1	O-ring, EPDM	9611995521	9611995521	9611995521	9611995521
41		1	Flushing tube	9614205401	9614205402	9614205402	9614205403
58		1	Spray nozzle, PVDF	9614221301	9614221201	9614221201	9614221201
Upper sealing element							
45		1	Guide ring	9613008416	9613008417	9613008417	9613008417
46	♦	1	O-ring, EPDM	9611993653	9611993654	9611993654	9611993654
47	♦	1	O-ring, EPDM	9611993632	9611993636	9611993636	9611993640
	♦	1	O-ring, NBR	9611993633	9611993637	9611993637	9611993641
	♦	1	O-ring, FPM	9611993634	9611993638	9611993638	9611993642
	♦	1	O-ring, HNBR	9611993635	9611993639	9611993639	9611993643
48		1	Upper sealing element, (blasted/Ra1.6)	9614220201	9614220301	9614220301	9614220401
		1	Upper sealing element, (polished/Ra0.8)	9614220202	9614220302	9614220302	9614220402
49	♦	1	Lip seal, EPDM	9613008501	9613008511	9613008511	9613008511
	♦	1	Lip seal, NBR	9613008502	9613008512	9613008512	9613008512
	♦	1	Lip seal, FPM	9613008503	9613008513	9613008513	9613008513
	♦	1	Lip seal, HNBR	9613008504	9613008514	9613008514	9613008514
66		2	Flushing tube	9614205802	9614205803	9614205803	9614205804
67	♦	2	O-ring, EPDM	9611995523	9611995523	9611995523	9611995523
68		1	Drain	8010000689	8010000689	8010000689	8010000689
69		1	Nozzle	8010000688	8010000688	8010000688	8010000688
144	♦	2	O-ring, EPDM	8010000690	8010000690	8010000690	8010000690
Upper plug							
54		1	Guide ring, PTFE	9613008401	9613008402	9613008402	9613008402
55		1	Upper plug	9614233102	9614234002	9614234002	9614234502
56	♦	1	Seal ring, EPDM	9613095106	9613095109	9613095109	9613095119
	♦	1	Seal ring, NBR	9613095114	9613095115	9613095115	9613095120
	♦	1	Seal ring, FPM	9613095105	9613095108	9613095108	9613095118
	♦	1	Seal ring, HNBR	9613095104	9613095107	9613095107	9613095117
		1	Seal ring set, (10 pcs.) EPDM	8010023165	8010023166	8010023166	8010023167
57	♦	1	Lip seal, EPDM	9613008706	9613008711	9613008711	9613008711
	♦	1	Lip seal, NBR	9613008707	9613008712	9613008712	9613008712
	♦	1	Lip seal, FPM	9613008708	9613008713	9613008713	9613008713
	♦	1	Lip seal, HNBR	9613008709	9613008714	9613008714	9613008714

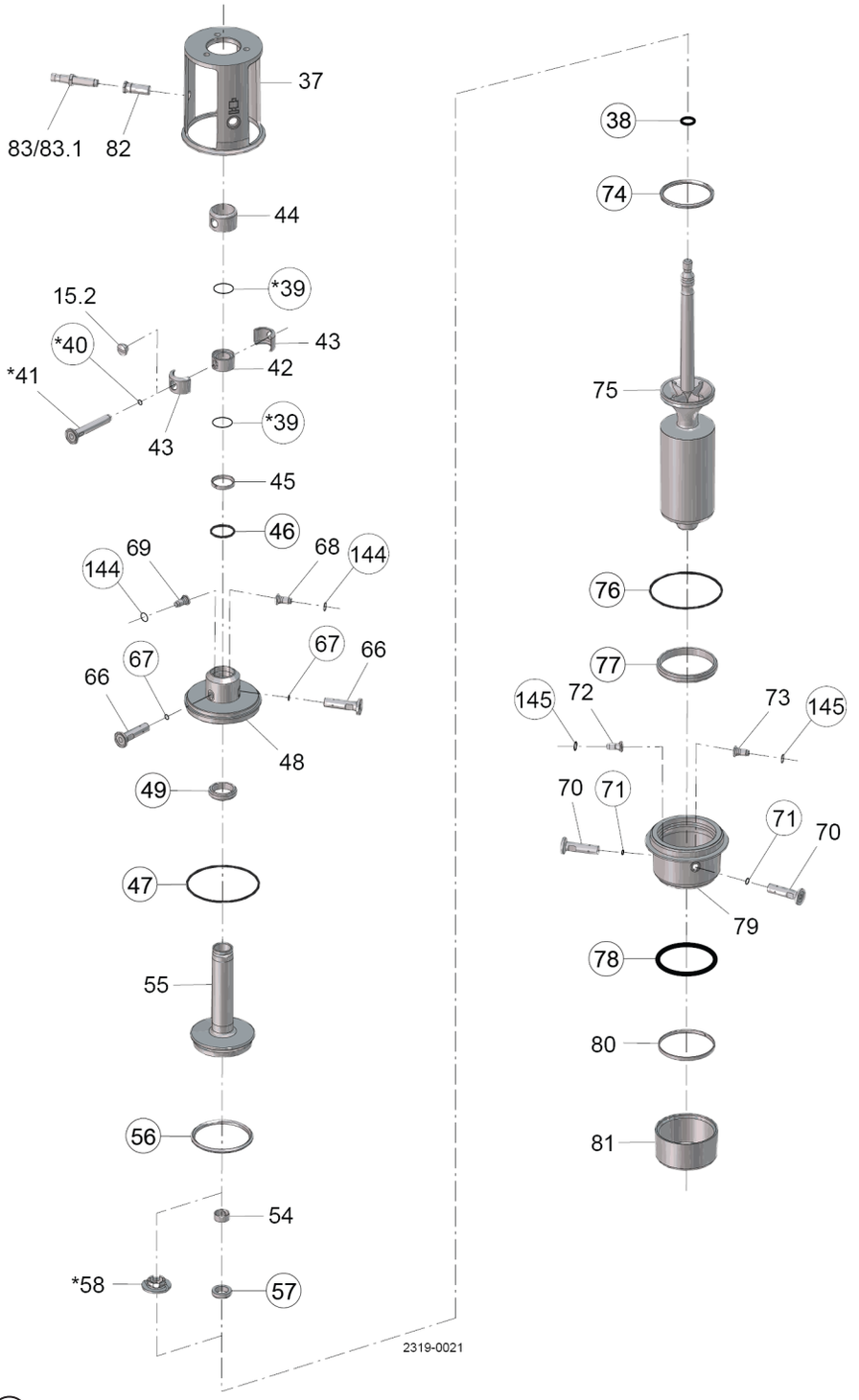

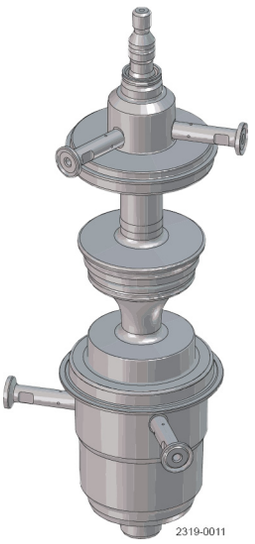

◯ = wear parts

✶ = with SpiralClean in leakage chamber

Pos		Qty	Denomination	2”	2½”	3”	4”
Lower plug							
38	♦	1	O-ring, EPDM	9611993555	9611993572	9611993572	9611993572
		1	O-ring set, (10 pcs.) EPDM	8010023163	8010023164	8010023164	8010023164
74	♦	1	Seal ring, EPDM	9613095206	9613095209	9613095209	9613095219
	♦	1	Seal ring, NBR	9613095214	9613095215	9613095215	9613095220
	♦	1	Seal ring, FPM - Alfa Laval recommends EPDM	9613095205	9613095208	9613095208	9613095218
	♦	1	Seal ring, HNBR	9613095204	9613095207	9613095207	9613095217
		1	Seal ring set, (10 pcs.) EPDM	8010023169	8010023170	8010023170	8010023171
75		1	Lower plug	9614202940	9614201604	9614201604	9614217824
Lower sealing element							
70		2	Flushing tube	9614205802	9614205803	9614205803	9614205804
71	♦	2	O-ring, EPDM	9611995523	9611995523	9611995523	9611995523
72		1	Drain	9614205701	9614205701	9614205701	9614205701
73		1	Nozzle	9614205601	9614205601	9614205601	9614205601
145	♦	2	O-ring, EPDM	8010000690	8010000690	8010000690	8010000690
76	♦	1	O-ring, EPDM	9611993632	9611993636	9611993636	9611993640
	♦	1	O-ring, NBR	9611993633	9611993637	9611993637	9611993641
	♦	1	O-ring, FPM	9611993634	9611993638	9611993638	9611993642
	♦	1	O-ring, HNBR	9611993635	9611993639	9611993639	9611993643
77	♦	1	Lip seal, EPDM	9613008521	9613008526	9613008526	9613008548
	♦	1	Lip seal, NBR	9613008522	9613008527	9613008527	9613008549
	♦	1	Lip seal, FPM	9613008523	9613008528	9613008528	9613008550
	♦	1	Lip seal, HNBR	9613008524	9613008529	9613008529	9613008551
78	♦	1	O-ring, EPDM	9611993650	9611993651	9611993651	9611994407
79		1	Lower sealing element, (blasted/Ra1.6)	9614220701	9614220801	9614220801	9614220901
		1	Lower sealing element, (polished/Ra0.8)	9614220702	9614220802	9614220802	9614220902
80		1	Guide ring, PTFE	9613008413	9613008414	9613008414	9613008420
81		1	Cover	9613049005	9613049006	9613049006	9613049015
Extra parts if clamped valve body							
52		1	O-ring, EPDM	9611993632	9611993636	9611993636	9611993640
		1	O-ring, NBR	9611993633	9611993637	9611993637	9611993641
		1	O-ring, FPM	9611993634	9611993638	9611993638	9611993642
		1	O-ring, HNBR	9611993635	9611993639	9611993639	9611993643

NOTE!
If clamped valve body an extra O-ring (pos. 52) is required.
If SpiralClean in leakage chamber, extra O-rings (2x pos. 39 and 1x pos. 40) is required.
Spare parts for mix size please refer to configurator in Alfa Laval Anytime

NOTE!
All FPM service kits are supplied with EPDM seal ring, pos. 74.

Service kits

		2” Seat ø53.3	2½” Seat ø81.3	3” Seat ø81.3	4” Seat ø100.3
♦	**Service kit, EPDM**	**9611928037**	**9611928041**	**9611928041**	**9611928045**
♦	**Service kit, NBR**	**9611928038**	**9611928042**	**9611928042**	**9611928046**
♦	**Service kit, FPM**	**9611928039**	**9611928043**	**9611928043**	**9611928047**
♦	**Service kit, HNBR**	**9611928040**	**9611928044**	**9611928044**	**9611928048**

For mixed size housings, the service kit is determined by the smallest size connection on the valve.

NOTE!
All FPM service kits are supplied with EPDM seal ring, pos. 74.

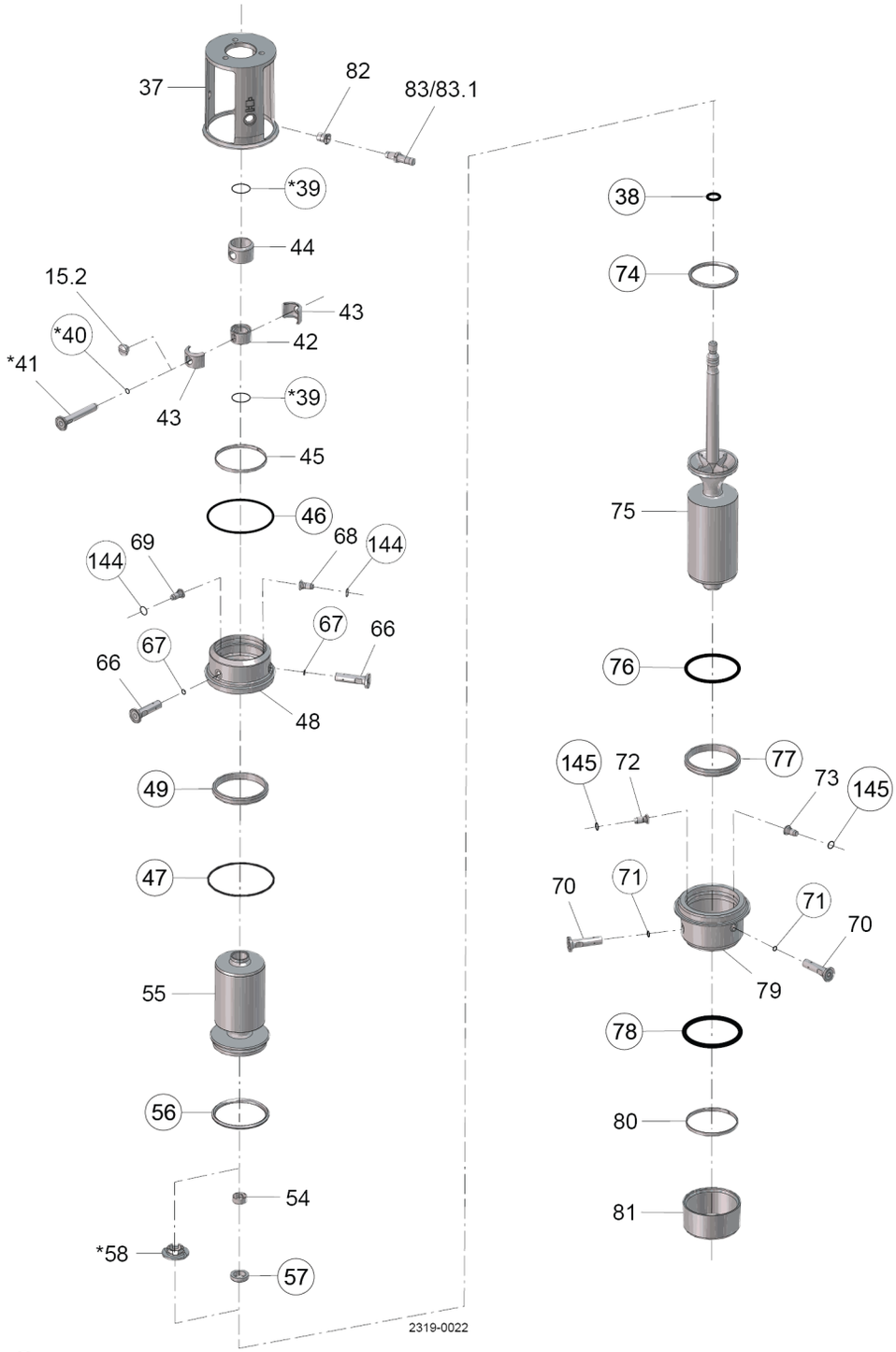

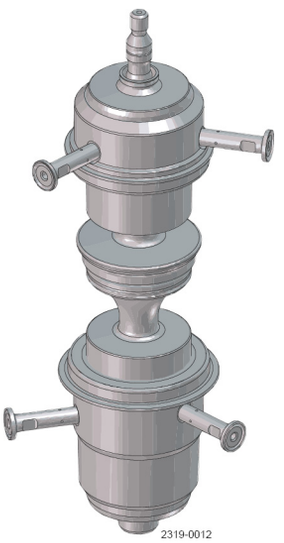

◯ = wear parts

✶ = with SpiralClean in leakage chamber

Pos		Qty	Denomination	1½"	2"	2½"	3"	4"
Intermediate parts								
37		1	Intermediate piece	9614255502	9614255902	9614256302	9614256304	9614256702
82	Δ	1	Bolt for indication	9614257508	9614257508	9614257508	9614257508	9614257508
83	Δ	1	Sensor for indication	9611995770	9611995770	9611995770	9611995770	9611995770
83.1		1	Cable for sensor for indication	9611994915	9611994915	9611994915	9611994915	9611994915
Spindle liner								
15.2		1	Plug	9615331901	9615331901	9615331901	9615331901	9615331901
42		1	Spindle liner	9614221101	9614221101	9614205301	9614205301	9614205301
43		2	Clamp	9613011801	9613011801	9613009201	9613009201	9613009201
44		1	Lock	9613011701	9613011701	9613009101	9613009101	9613009101
Extra parts if SpiralClean in leakage chamber								
39		2	O-ring, EPDM	9611993492	9611993492	9611993493	9611993493	9611993493
40		1	O-ring, EPDM	9611995521	9611995521	9611995521	9611995521	9611995521
41		1	Flushing tube	9614205401	9614205401	9614205402	9614205402	9614205403
58		1	Spray nozzle, PVDF	9614221301	9614221301	9614221201	9614221201	9614221201
Upper sealing element								
45		1	Guide ring	9613008412	9613008413	9613008414	9613008414	9613008420
46	♦	1	O-ring, EPDM	9611993655	9611993650	9611993651	9611993651	9611994407
47	♦	1	O-ring, EPDM	9611993628	9611993632	9611993636	9611993636	9611993640
	♦	1	O-ring, NBR	9611993629	9611993633	9611993637	9611993637	9611993641
	♦	1	O-ring, FPM	9611993630	9611993634	9611993638	9611993638	9611993642
	♦	1	O-ring, HNBR	9611993631	9611993635	9611993639	9611993639	9611993643
48		1	Upper sealing element, (blasted/Ra1.6)	9614220101	9614219801	9614205901	9614205901	9614219901
		1	Upper sealing element, (polished/Ra0.8)	9614220102	9614219802	9614205902	9614205902	9614219902
49	♦	1	Lip seal, EPDM	9613008516	9613008521	9613008526	9613008526	9613008548
	♦	1	Lip seal, NBR	9613008517	9613008522	9613008527	9613008527	9613008549
	♦	1	Lip seal, FPM	9613008518	9613008523	9613008528	9613008528	9613008550
	♦	1	Lip seal, HNBR	9613008519	9613008524	9613008529	9613008529	9613008551
66		2	Flushing tube	9614205801	9614205802	9614205803	9614205803	9614205804
67	♦	2	O-ring, EPDM	9611995523	9611995523	9611995523	9611995523	9611995523
68		1	Drain	8010000689	8010000689	8010000689	8010000689	9614205701
69		1	Nozzle	8010000688	8010000688	8010000688	8010000688	9614205601
144	♦	2	O-ring, EPDM	8010000690	8010000690	8010000690	8010000690	8010000690
Upper plug								
54		1	Guide ring, PTFE	9613008401	9613008401	9613008402	9613008402	9613008402
55		1	Upper plug	9614232502	9614233110	9614234008	9614234008	9614234506
56	♦	1	Seal ring, EPDM	9613095106	9613095106	9613095109	9613095109	9613095119
	♦	1	Seal ring, NBR	9613095114	9613095114	9613095115	9613095115	9613095120
	♦	1	Seal ring, FPM	9613095105	9613095105	9613095108	9613095108	9613095118
	♦	1	Seal ring, HNBR	9613095104	9613095104	9613095107	9613095107	9613095117
		1	Seal ring set, (10 pcs.) EPDM	8010023165	8010023165	8010023166	8010023166	8010023167
57	♦	1	Lip seal, EPDM	9613008706	9613008706	9613008711	9613008711	9613008711
	♦	1	Lip seal, NBR	9613008707	9613008707	9613008712	9613008712	9613008712
	♦	1	Lip seal, FPM	9613008708	9613008708	9613008713	9613008713	9613008713
	♦	1	Lip seal, HNBR	9613008709	9613008709	9613008714	9613008714	9613008714

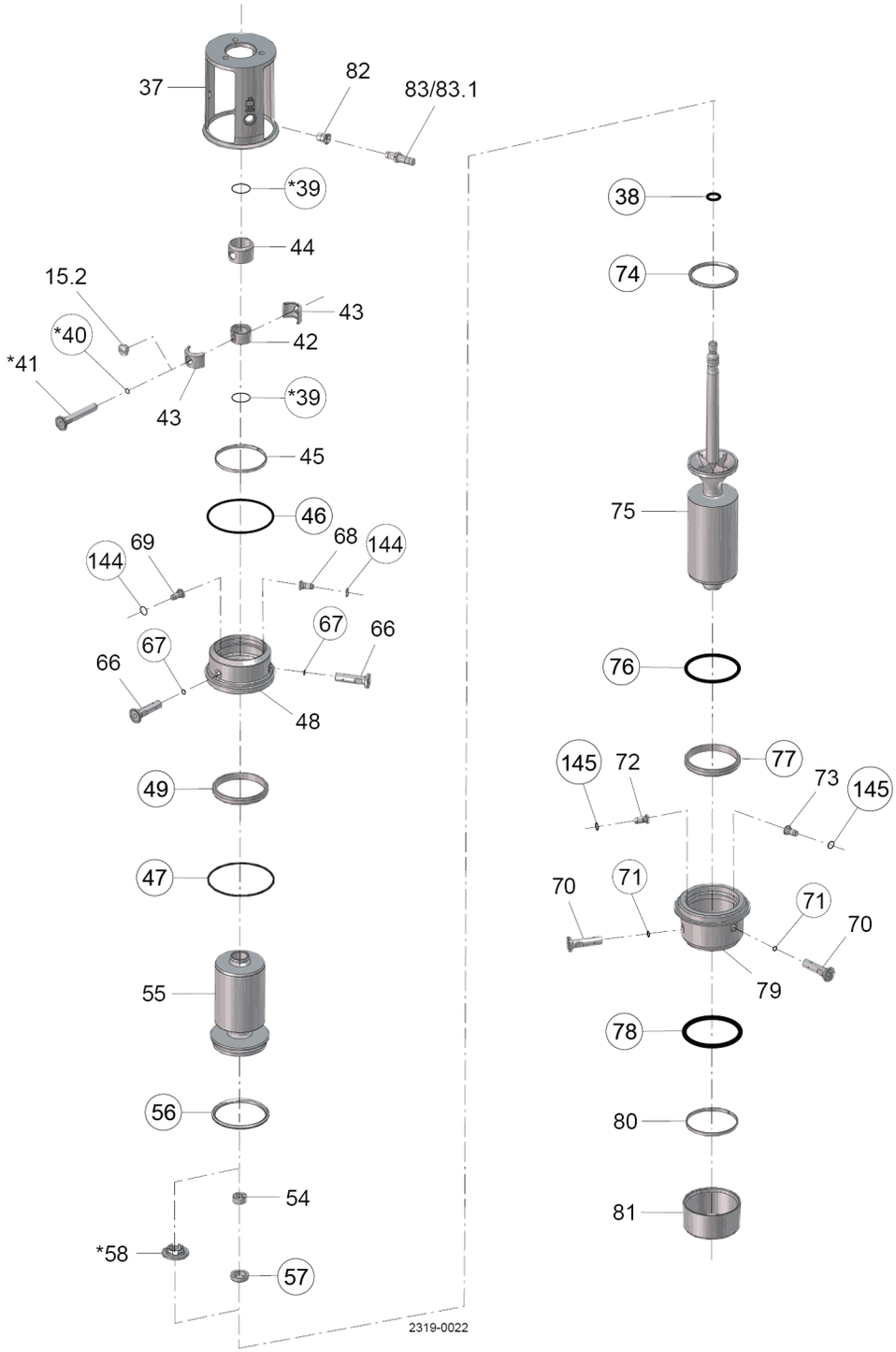

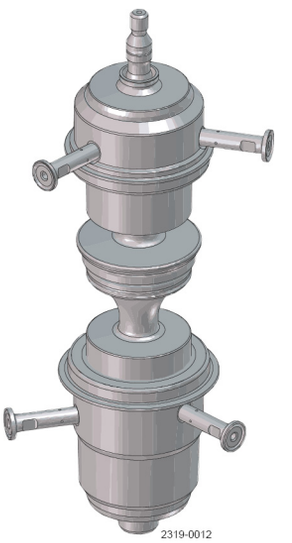

◯ = wear parts

✶ = with SpiralClean in leakage chamber

Pos		Qty	Denomination	1½"	2"	2½"	3"	4"
Lower plug								
38	♦	1	O-ring, EPDM	9611993555	9611993555	9611993572	9611993572	9611993572
		1	O-ring set, (10 pcs.) EPDM	8010023163	8010023163	8010023164	8010023164	8010023164
74	♦	1	Seal ring, EPDM	9613095206	9613095206	9613095209	9613095209	9613095219
	♦	1	Seal ring, NBR	9613095214	9613095214	9613095215	9613095215	9613095220
	♦	1	Seal ring, FPM - Alfa Laval recommends EPDM	9613095205	9613095205	9613095208	9613095208	9613095218
	♦	1	Seal ring, HNBR	9613095204	9613095204	9613095207	9613095207	9613095217
		1	Seal ring set, (10 pcs.) EPDM	8010023169	8010023169	8010023170	8010023170	8010023171
75		1	Lower plug	9614202904	9614202940	9614201604	9614201604	9614217824
Lower sealing element								
70		2	Flushing tube	9614205801	9614205802	9614205803	9614205803	9614205804
71	♦	2	O-ring, EPDM	9611995523	9611995523	9611995523	9611995523	9611995523
72		1	Drain	8010000689	9614205701	9614205701	9614205701	9614205701
73		1	Nozzle	8010000688	9614205601	9614205601	9614205601	9614205601
145	♦	2	O-ring, EPDM	8010000690	8010000690	8010000690	8010000690	8010000690
76	♦	1	O-ring, EPDM	9611993628	9611993632	9611993636	9611993636	9611993640
	♦	1	O-ring, NBR	9611993629	9611993633	9611993637	9611993637	9611993641
	♦	1	O-ring, FPM	9611993630	9611993634	9611993638	9611993638	9611993642
	♦	1	O-ring, HNBR	9611993631	9611993635	9611993639	9611993639	9611993643
77	♦	1	Lip seal, EPDM	9613008516	9613008521	9613008526	9613008526	9613008548
	♦	1	Lip seal, NBR	9613008517	9613008522	9613008527	9613008527	9613008549
	♦	1	Lip seal, FPM	9613008518	9613008523	9613008528	9613008528	9613008550
	♦	1	Lip seal, HNBR	9613008519	9613008524	9613008529	9613008529	9613008551
78	♦	1	O-ring, EPDM	9611993655	9611993650	9611993651	9611993651	9611994407
79		1	Lower sealing element, (blasted/Ra1.6)	9614220501	9614220701	9614220801	9614220801	9614220901
		1	Lower sealing element, (polished/Ra0.8)	9614220502	9614220702	9614220802	9614220802	9614220902
80		1	Guide ring, PTFE	9613008412	9613008413	9613008414	9613008414	9613008420
81		1	Cover	9613049001	9613049005	9613049006	9613049006	9613049015
Extra parts if clamped valve body								
52		1	O-ring, EPDM	9611993628	9611993632	9611993636	9611993636	9611993640
		1	O-ring, NBR	9611993629	9611993633	9611993637	9611993637	9611993641
		1	O-ring, FPM	9611993630	9611993634	9611993638	9611993638	9611993642
		1	O-ring, HNBR	9611993631	9611993635	9611993639	9611993639	9611993643

NOTE!

If clamped valve body an extra O-ring (pos. 52) is required.

If SpiralClean in leakage chamber, extra O-rings (2x pos. 39 and 1x pos. 40) is required.

Δ Sensor service kit for valves delivered prior to October 2015 - 9611928351

Spare parts for mix size please refer to configurator in Alfa Laval Anytime

NOTE!

All FPM service kits are supplied with EPDM seal ring, pos. 74.

Service kits

		1½" Seat ø53.3	2" Seat ø53.3	2½" Seat ø81.3	3" Seat ø81.3	4" Seat ø100.3
♦	**Service kit, EPDM**	9611928053	9611928057	9611928061	9611928061	9611928065
♦	**Service kit, NBR**	9611928054	9611928058	9611928062	9611928062	9611928066
♦	**Service kit, FPM**	9611928055	9611928059	9611928063	9611928063	9611928067
♦	**Service kit, HNBR**	9611928056	9611928060	9611928064	9611928064	9611928068

For mixed size housings, the service kit is determined by the smallest size connection on the valve.

NOTE!

All FPM service kits are supplied with EPDM seal ring, pos. 74.

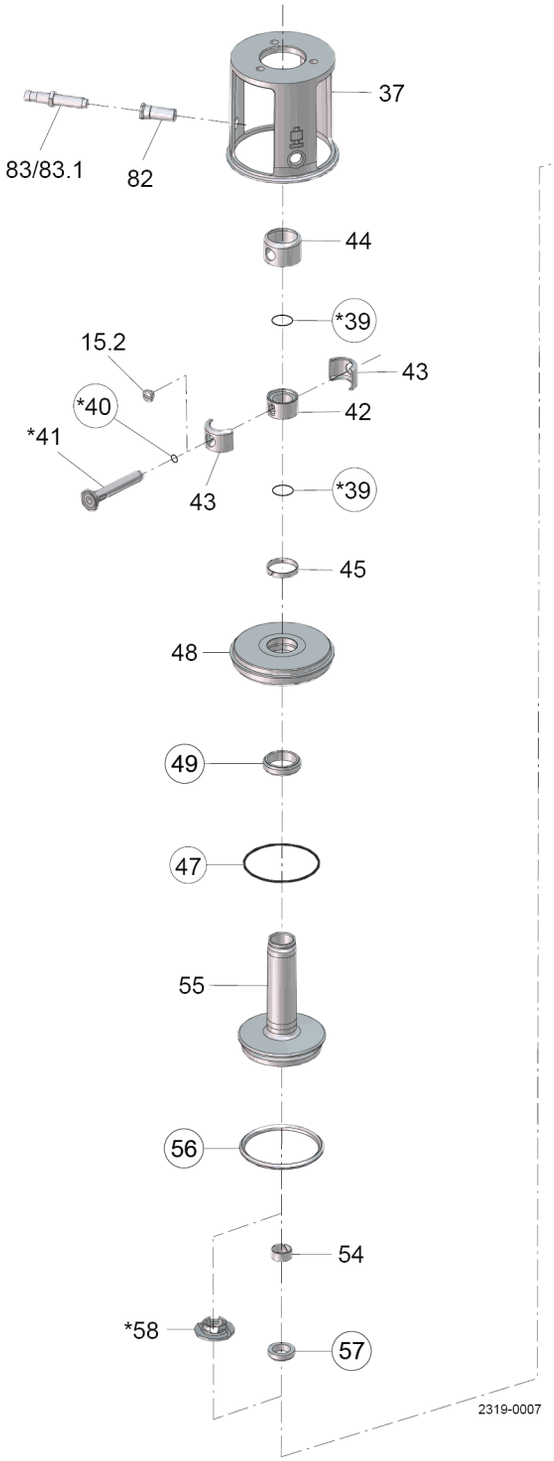

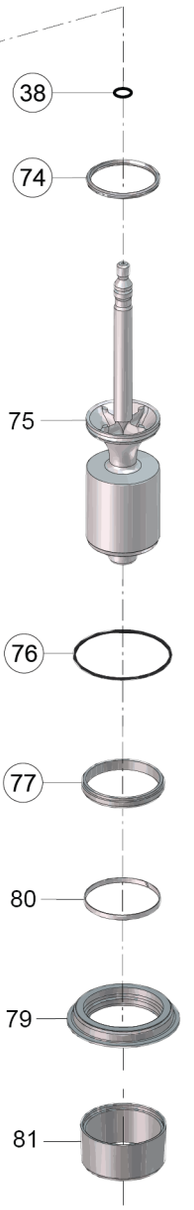

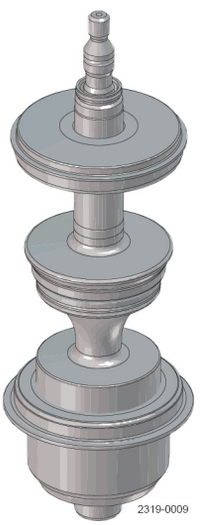

◯ = wear parts

★ = with SpiralClean in leakage chamber

Pos		Qty	Denomination	2”	2½”	3”	4”
Intermediate parts							
37		1	Intermediate piece	9614255901	9614256301	9614256303	9614256701
82		1	Bolt for indication	9614257508	9614257508	9614257508	9614257508
83		1	Sensor for indication	9611995199	9611995199	9611995199	9611995199
83.1		1	Cable for sensor for indication	9611994915	9611994915	9611994915	9611994915
Spindle liner							
15.2		1	Plug	9615331901	9615331901	9615331901	9615331901
42		1	Spindle liner	9614221101	9614205301	9614205301	9614205301
43		2	Clamp	9613011801	9613009201	9613009201	9613009201
44		1	Lock	9613011701	9613009101	9613009101	9613009101
Extra parts if SpiralClean in leakage chamber							
39		2	O-ring, EPDM	9611993492	9611993493	9611993493	9611993493
40		1	O-ring, EPDM	9611995521	9611995521	9611995521	9611995521
41		1	Flushing tube	9614205401	9614205402	9614205402	9614205403
58		1	Spray nozzle, PVDF	9614221301	9614221201	9614221201	9614221201
Upper sealing element							
45		1	Guide ring , PTFE	9613008416	9613008417	9613008417	9613008417
47	♦	1	O-ring, EPDM	9611993632	9611993636	9611993636	9611993640
	♦	1	O-ring, NBR	9611993633	9611993637	9611993637	9611993641
	♦	1	O-ring, FPM	9611993634	9611993638	9611993638	9611993642
	♦	1	O-ring, HNBR	9611993635	9611993639	9611993639	9611993643
48		1	Upper sealing element, (blasted/Ra1.6)	9613014201	9613006401	9613006401	9613018801
		1	Upper sealing element, (polished/Ra0.8)	9613014203	9613006403	9613006403	9613018803
49	♦	1	Lip seal, EPDM	9613008501	9613008511	9613008511	9613008511
	♦	1	Lip seal, NBR	9613008502	9613008512	9613008512	9613008512
	♦	1	Lip seal, FPM	9613008503	9613008513	9613008513	9613008513
	♦	1	Lip seal, HNBR	9613008504	9613008514	9613008514	9613008514
Upper plug							
54		1	Guide ring, PTFE	9613008401	9613008402	9613008402	9613008402
55		1	Upper plug	9614233101	9614234001	9614234001	9614234501
56	♦	1	Seal ring, EPDM	9613095106	9613095109	9613095109	9613095119
	♦	1	Seal ring, NBR	9613095114	9613095115	9613095115	9613095120
	♦	1	Seal ring, FPM	9613095105	9613095108	9613095108	9613095118
	♦	1	Seal ring, HNBR	9613095104	9613095107	9613095107	9613095117
		1	Seal ring set, (10 pcs.) EPDM	8010023165	8010023166	8010023166	8010023167
57	♦	1	Lip seal, EPDM	9613008706	9613008711	9613008711	9613008711
	♦	1	Lip seal, NBR	9613008707	9613008712	9613008712	9613008712
	♦	1	Lip seal, FPM	9613008708	9613008713	9613008713	9613008713
	♦	1	Lip seal, HNBR	9613008709	9613008714	9613008714	9613008714

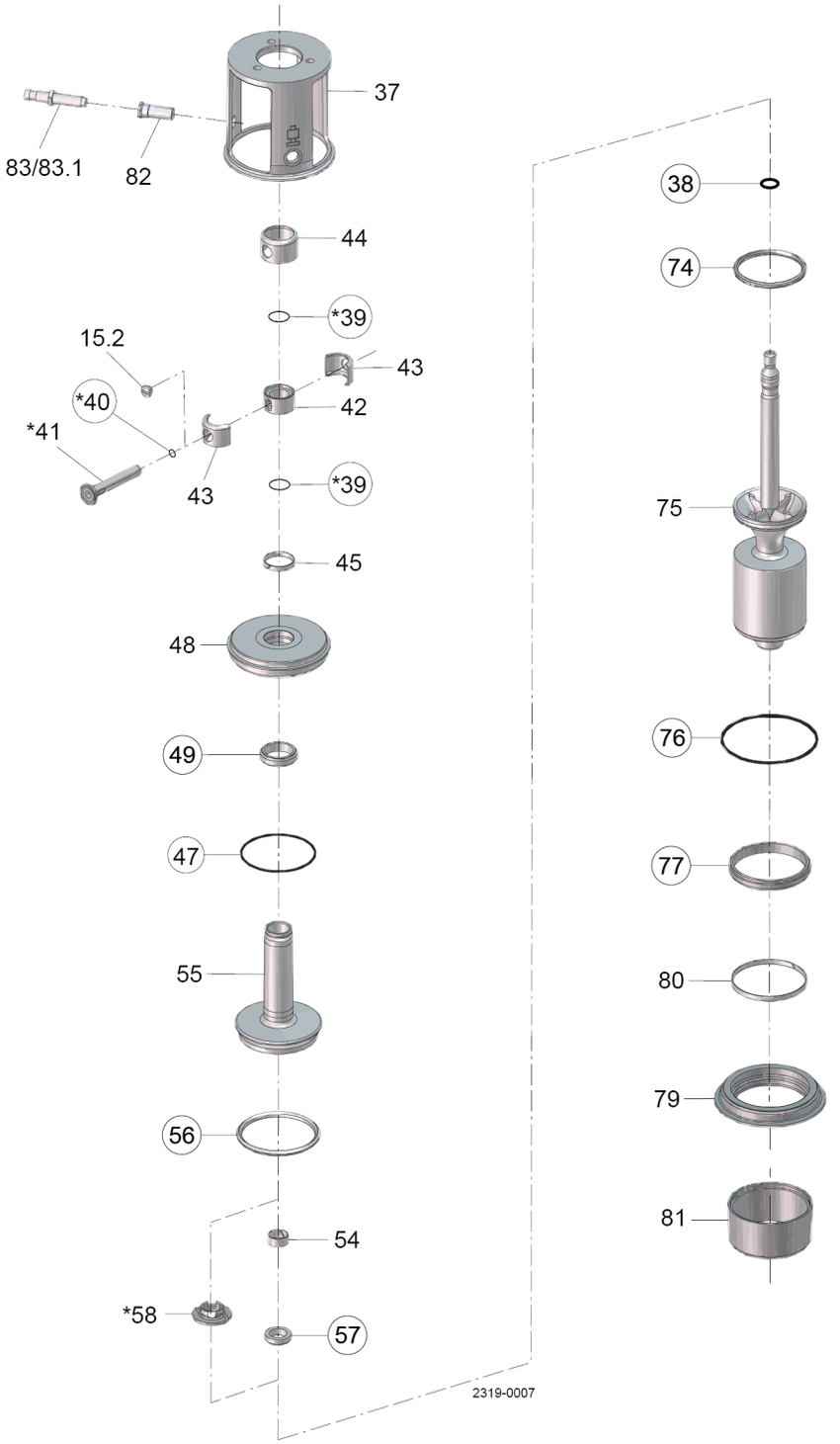

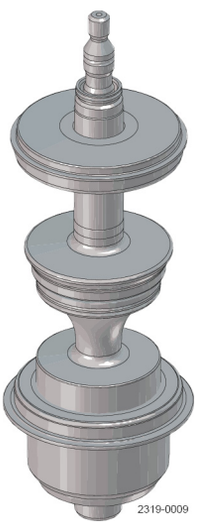

◯ = wear parts

✶ = with SpiralClean in leakage chamber

Pos		Qty	Denomination	2”	2½”	3”	4”
Lower plug							
38	♦	1	O-ring, EPDM	9611993555	9611993572	9611993572	9611993572
		1	O-ring set, (10 pcs.) EPDM	8010023163	8010023164	8010023164	8010023164
74	♦	1	Seal ring, EPDM	9613095206	9613095209	9613095209	9613095219
	♦	1	Seal ring, NBR	9613095214	9613095215	9613095215	9613095220
	♦	1	Seal ring, FPM - Alfa Laval recommends EPDM	9613095205	9613095208	9613095208	9613095218
	♦	1	Seal ring, HNBR	9613095204	9613095207	9613095207	9613095217
		1	Seal ring set, (10 pcs.) EPDM	8010023169	8010023170	8010023170	8010023171
75		1	Lower plug	9614202937	9614201601	9614201601	9614217821
Lower sealing element							
76	♦	1	O-ring, EPDM	9611993632	9611993636	9611993636	9611993640
	♦	1	O-ring, NBR	9611993633	9611993637	9611993637	9611993641
	♦	1	O-ring, FPM	9611993634	9611993638	9611993638	9611993642
	♦	1	O-ring, HNBR	9611993635	9611993639	9611993639	9611993643
77	♦	1	Lip seal, EPDM	9613008521	9613008526	9613008526	9613008548
	♦	1	Lip seal, NBR	9613008522	9613008527	9613008527	9613008549
	♦	1	Lip seal, FPM	9613008523	9613008528	9613008528	9613008550
	♦	1	Lip seal, HNBR	9613008524	9613008529	9613008529	9613008551
79		1	Lower sealing element, (blasted/Ra1.6)	9613023902	9613024102	9613024102	9613066201
		1	Lower sealing element, (polished/Ra0.8)	9613023904	9613024104	9613024104	9613066202
80		1	Guide ring, PTFE	9613008413	9613008414	9613008414	9613008420
81		1	Cover	9613049005	9613049006	9613049006	9613049015
Extra parts if clamped valve body							
52		1	O-ring, EPDM	9611993632	9611993636	9611993636	9611993640
		1	O-ring, NBR	9611993633	9611993637	9611993637	9611993641
		1	O-ring, FPM	9611993634	9611993638	9611993638	9611993642
		1	O-ring, HNBR	9611993635	9611993639	9611993639	9611993643

NOTE!
If clamped valve body an extra O-ring (pos. 52) is required.
If SpiralClean in leakage chamber, extra O-rings (2x pos. 39 and 1x pos. 40) is required.
Spare parts for mix size please refer to configurator in Alfa Laval Anytime

NOTE!
All FPM service kits are supplied with EPDM seal ring, pos. 74.

Service kits

		2” Seat ø53.3	2½” Seat ø81.3	3” Seat ø81.3	4” Seat ø100.3
♦	Service kit, EPDM	9611928073	9611928077	9611928077	9611928081
♦	Service kit, NBR	9611928074	9611928078	9611928078	9611928082
♦	Service kit, FPM	9611928075	9611928079	9611928079	9611928083
♦	Service kit, HNBR	9611928076	9611928080	9611928080	9611928084

For mixed size housings, the service kit is determined by the smallest size connection on the valve.

NOTE!
All FPM service kits are supplied with EPDM seal ring, pos. 74.

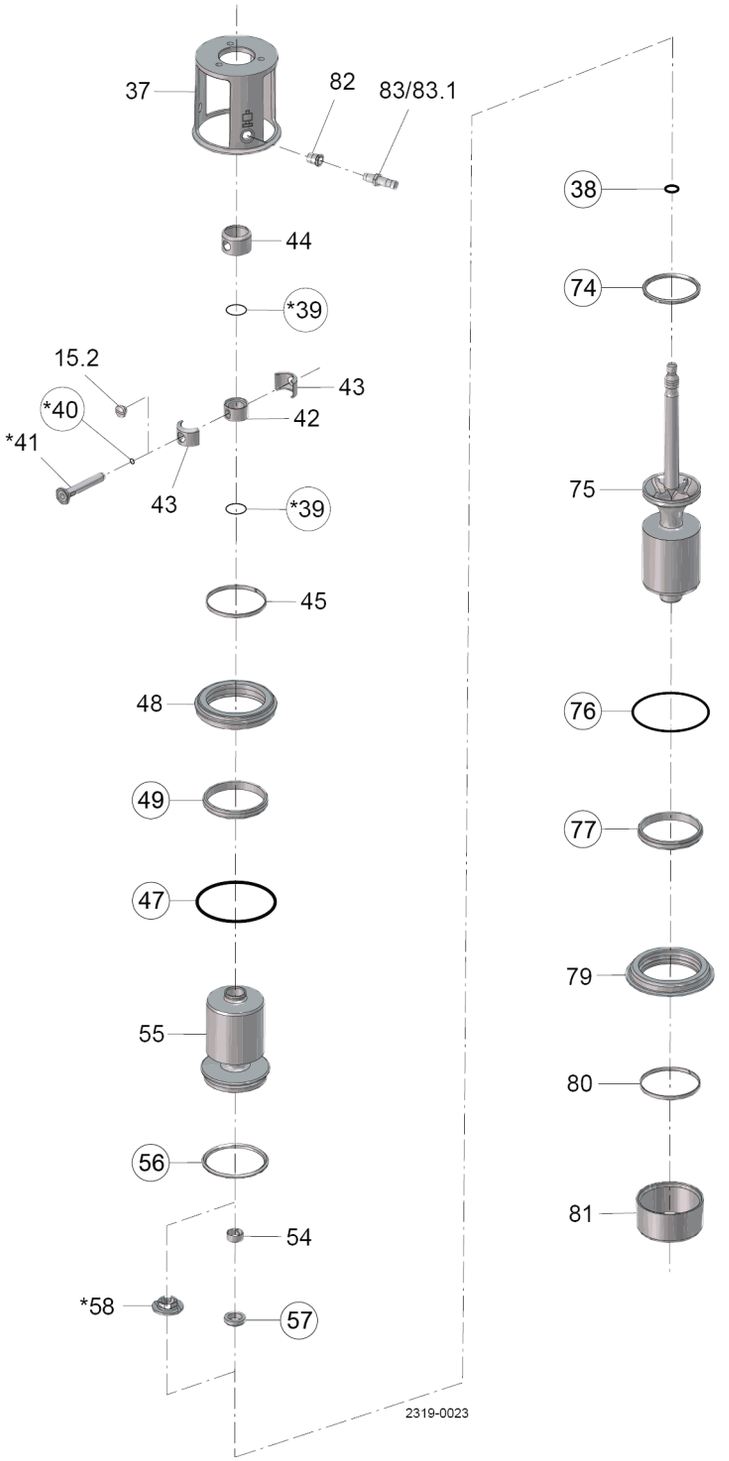

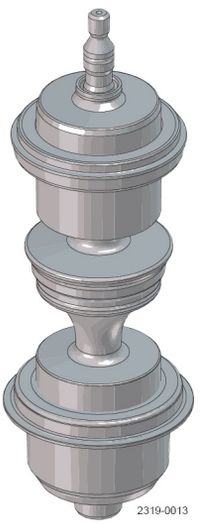

◯ = wear parts

✶ = with SpiralClean in leakage chamber

Pos		Qty	Denomination	1½"	2"	2½"	3"	4"
Intermediate parts								
37		1	Intermediate piece	9614255501	9614255901	9614256301	9614256303	9614256701
82	Δ	1	Bolt for indication	9614257508	9614257508	9614257508	9614257508	9614257508
83	Δ	1	Sensor for indication	9611995770	9611995770	9611995770	9611995770	9611995770
83.1		1	Cable for sensor for indication	9611994915	9611994915	9611994915	9611994915	9611994915
Spindle liner								
15.2		1	Plug	9615331901	9615331901	9615331901	9615331901	9615331901
42		1	Spindle liner	9614221101	9614221101	9614205301	9614205301	9614205301
43		2	Clamp	9613011801	9613011801	9613009201	9613009201	9613009201
44		1	Lock	9613011701	9613011701	9613009101	9613009101	9613009101
Extra parts if SpiralClean in leakage chamber								
39		2	O-ring, EPDM	9611993492	9611993492	9611993493	9611993493	9611993493
40		1	O-ring, EPDM	9611995521	9611995521	9611995521	9611995521	9611995521
41		1	Flushing tube	9614205401	9614205401	9614205402	9614205402	9614205403
58		1	Spray nozzle, PVDF	9614221301	9614221301	9614221201	9614221201	9614221201
Upper sealing element								
45		1	Guide ring, PTFE	9613008412	9613008413	9613008414	9613008414	9613008420
47	♦	1	O-ring, EPDM	9611993628	9611993632	9611993636	9611993636	9611993640
	♦	1	O-ring, NBR	9611993629	9611993633	9611993637	9611993637	9611993641
	♦	1	O-ring, FPM	9611993630	9611993634	9611993638	9611993638	9611993642
	♦	1	O-ring, HNBR	9611993631	9611993635	9611993639	9611993639	9611993643
48		1	Upper sealing element, (blasted/Ra1.6)	9613015701	9613014202	9613006402	9613006402	9613066001
		1	Upper sealing element, (polished/Ra0.8)	9613015702	9613014204	9613006404	9613006404	9613066002
49	♦	1	Lip seal, EPDM	9613008516	9613008521	9613008526	9613008526	9613008548
	♦	1	Lip seal, NBR	9613008517	9613008522	9613008527	9613008527	9613008549
	♦	1	Lip seal, FPM	9613008518	9613008523	9613008528	9613008528	9613008550
	♦	1	Lip seal, HNBR	9613008519	9613008524	9613008529	9613008529	9613008551
Upper plug								
54		1	Guide ring, PTFE	9613008401	9613008401	9613008402	9613008402	9613008402
55		1	Upper plug	9614232501	9614233109	9614234007	9614234007	9614234505
56	♦	1	Seal ring, EPDM	9613095106	9613095106	9613095109	9613095109	9613095119
	♦	1	Seal ring, NBR	9613095114	9613095114	9613095115	9613095115	9613095120
	♦	1	Seal ring, FPM	9613095105	9613095105	9613095108	9613095108	9613095118
	♦	1	Seal ring, HNBR	9613095104	9613095104	9613095107	9613095107	9613095117
		1	Seal ring set, (10 pcs.) EPDM	8010023165	8010023165	8010023166	8010023166	8010023167
57	♦	1	Lip seal, EPDM	9613008706	9613008706	9613008711	9613008711	9613008711
	♦	1	Lip seal, NBR	9613008707	9613008707	9613008712	9613008712	9613008712
	♦	1	Lip seal, FPM	9613008708	9613008708	9613008713	9613008713	9613008713
	♦	1	Lip seal, HNBR	9613008709	9613008709	9613008714	9613008714	9613008714

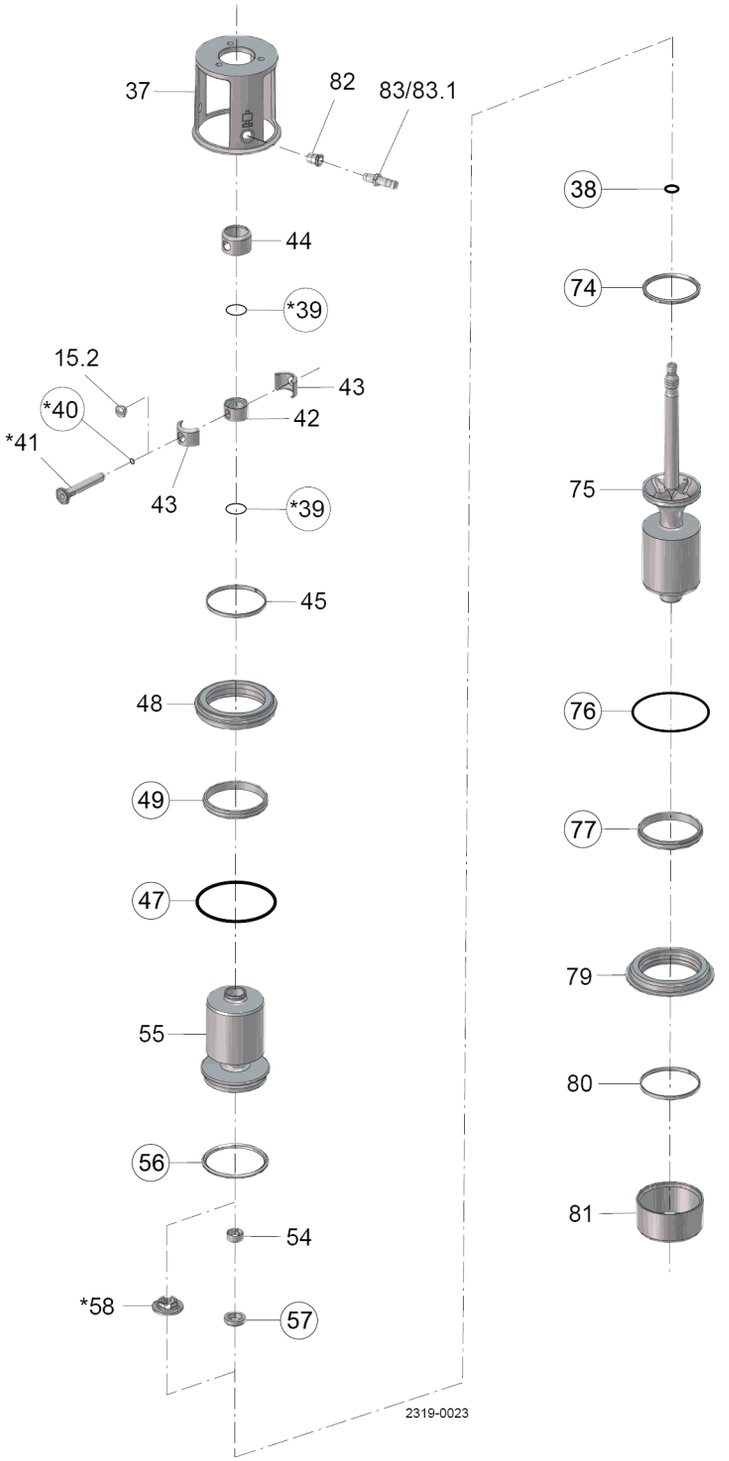

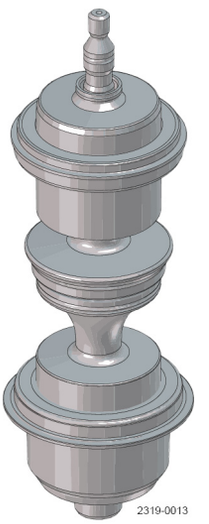

◯ = wear parts

✶ = with SpiralClean in leakage chamber

Pos		Qty	Denomination	1½"	2"	2½"	3"	4"
Lower plug								
38	♦	1	O-ring, EPDM	9611993555	9611993555	9611993572	9611993572	9611993572
		1	O-ring set, (10 pcs.) EPDM	8010023163	8010023163	8010023164	8010023164	8010023164
74	♦	1	Seal ring, EPDM	9613095206	9613095206	9613095209	9613095209	9613095219
	♦	1	Seal ring, NBR	9613095214	9613095214	9613095215	9613095215	9613095220
	♦	1	Seal ring, FPM - Alfa Laval recommends EPDM	9613095205	9613095205	9613095208	9613095208	9613095218
	♦	1	Seal ring, HNBR	9613095204	9613095204	9613095207	9613095207	9613095217
		1	Seal ring set, (10 pcs.) EPDM	8010023169	8010023169	8010023170	8010023170	8010023171
75		1	Lower plug	9614202901	9614202937	9614201601	9614201601	9614217821
Lower sealing element								
76	♦	1	O-ring, EPDM	9611993628	9611993632	9611993636	9611993636	9611993640
	♦	1	O-ring, NBR	9611993629	9611993633	9611993637	9611993637	9611993641
	♦	1	O-ring, FPM	9611993630	9611993634	9611993638	9611993638	9611993642
	♦	1	O-ring, HNBR	9611993631	9611993635	9611993639	9611993639	9611993643
77	♦	1	Lip seal, EPDM	9613008516	9613008521	9613008526	9613008526	9613008548
	♦	1	Lip seal, NBR	9613008517	9613008522	9613008527	9613008527	9613008549
	♦	1	Lip seal, FPM	9613008518	9613008523	9613008528	9613008528	9613008550
	♦	1	Lip seal, HNBR	9613008519	9613008524	9613008529	9613008529	9613008551
79		1	Lower sealing element, (blasted/Ra1.6)	9613023701	9613023902	9613024102	9613024102	9613066201
		1	Lower sealing element, (polished/Ra0.8)	9613023702	9613023904	9613024104	9613024104	9613066202
80		1	Guide ring, PTFE	9613008412	9613008413	9613008414	9613008414	9613008420
81		1	Cover	9613049001	9613049005	9613049006	9613049006	9613049015
Extra parts if clamped valve body								
52		1	O-ring, EPDM	9611993628	9611993632	9611993636	9611993636	9611993640
		1	O-ring, NBR	9611993629	9611993633	9611993637	9611993637	9611993641
		1	O-ring, FPM	9611993630	9611993634	9611993638	9611993638	9611993642
		1	O-ring, HNBR	9611993631	9611993635	9611993639	9611993639	9611993643

NOTE!
If clamped valve body an extra O-ring (pos. 52) is required.
If SpiralClean in leakage chamber, extra O-rings (2x pos. 39 and 1x pos. 40) is required.
Δ Sensor service kit for valves delivered prior to October 2015 - 9611928351
Spare parts for mix size please refer to configurator in Alfa Laval Anytime

NOTE!
All FPM service kits are supplied with EPDM seal ring, pos. 74.

Service kits

		1½" Seat ø53.3	2" Seat ø53.3	2½" Seat ø81.3	3" Seat ø81.3	4" Seat ø100.3
♦	**Service kit, EPDM**	**9611928089**	**9611928093**	**9611928097**	**9611928097**	**9611928101**
♦	**Service kit, NBR**	**9611928090**	**9611928094**	**9611928098**	**9611928098**	**9611928102**
♦	**Service kit, FPM**	**9611928091**	**9611928095**	**9611928099**	**9611928099**	**9611928103**
♦	**Service kit, HNBR**	**9611928092**	**9611928096**	**9611928100**	**9611928100**	**9611928104**

For mixed size housings, the service kit is determined by the smallest size connection on the valve.

NOTE!
All FPM service kits are supplied with EPDM seal ring, pos. 74.

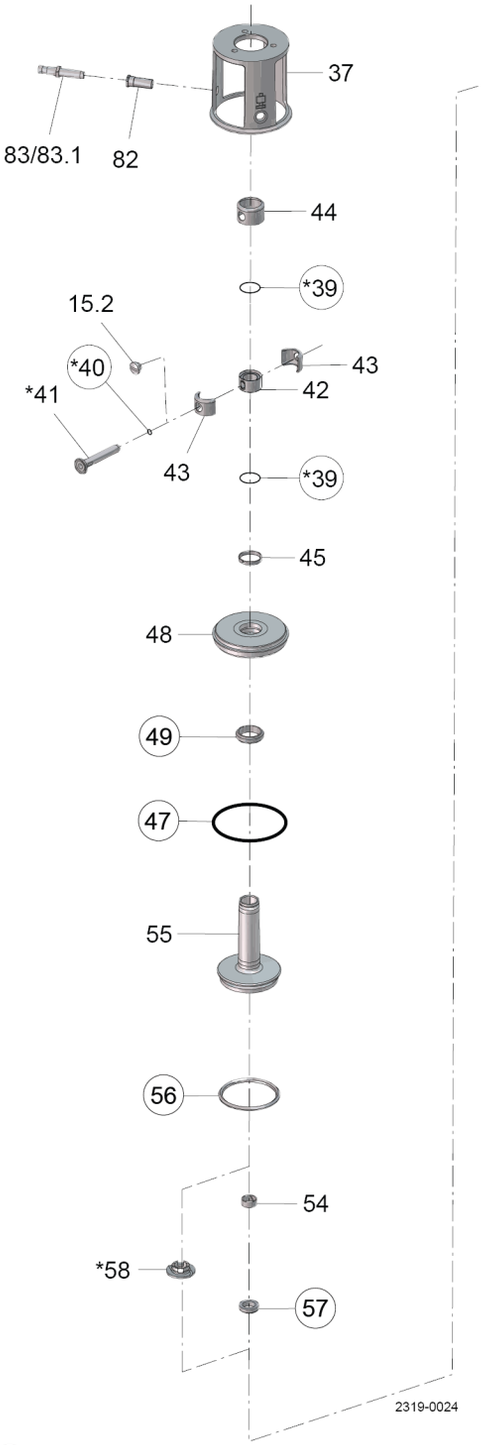

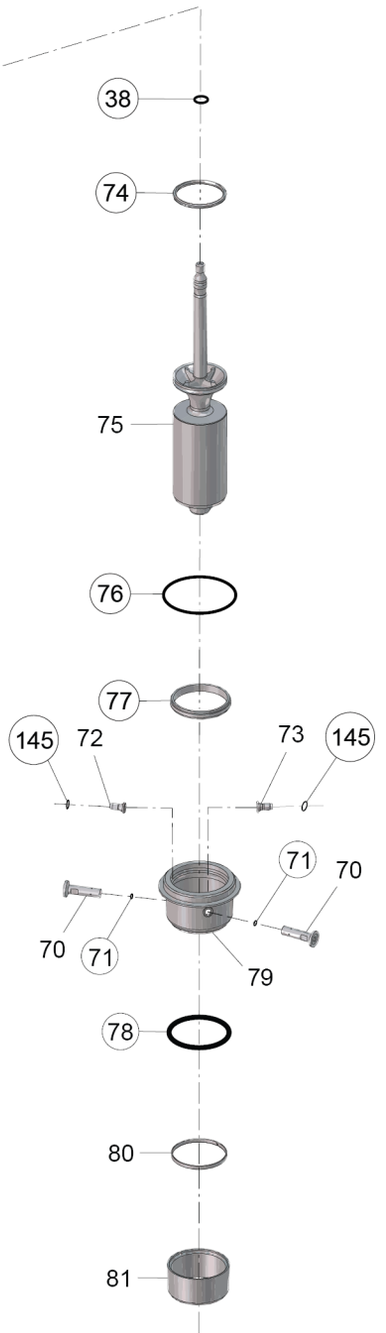

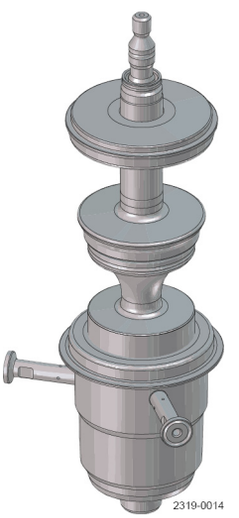

◯ = wear parts

★ = with SpiralClean in leakage chamber

Pos		Qty	Denomination	2”	2½”	3”	4”
Intermediate parts							
37		1	Intermediate piece	9614255901	9614256301	9614256303	9614256701
82		1	Bolt for indication	9614257508	9614257508	9614257508	9614257508
83		1	Sensor for indication	9611995199	9611995199	9611995199	9611995199
83.1		1	Cable for sensor for indication	9611994915	9611994915	9611994915	9611994915
Spindle liner							
15.2		1	Plug	9615331901	9615331901	9615331901	9615331901
42		1	Spindle liner	9614221101	9614205301	9614205301	9614205301
43		2	Clamp	9613011801	9613009201	9613009201	9613009201
44		1	Lock	9613011701	9613009101	9613009101	9613009101
Extra parts if SpiralClean in leakage chamber							
39		2	O-ring, EPDM	9611993492	9611993493	9611993493	9611993493
40		1	O-ring, EPDM	9611995521	9611995521	9611995521	9611995521
41		1	Flushing tube	9614205401	9614205402	9614205402	9614205403
58		1	Spray nozzle, PVDF	9614221301	9614221201	9614221201	9614221201
Upper sealing element							
45		1	Guide ring, PTFE	9613008416	9613008417	9613008417	9613008417
47	♦	1	O-ring, EPDM	9611993632	9611993636	9611993636	9611993640
	♦	1	O-ring, NBR	9611993633	9611993637	9611993637	9611993641
	♦	1	O-ring, FPM	9611993634	9611993638	9611993638	9611993642
	♦	1	O-ring, HNBR	9611993635	9611993639	9611993639	9611993643
48		1	Upper sealing element, (blasted/Ra1.6)	9613014201	9613006401	9613006401	9613018801
		1	Upper sealing element, (polished/Ra0.8)	9613014203	9613006403	9613006403	9613018803
49	♦	1	Lip seal, EPDM	9613008501	9613008511	9613008511	9613008511
	♦	1	Lip seal, NBR	9613008502	9613008512	9613008512	9613008512
	♦	1	Lip seal, FPM	9613008503	9613008513	9613008513	9613008513
	♦	1	Lip seal, HNBR	9613008504	9613008514	9613008514	9613008514
Upper plug							
54		1	Guide ring, PTFE	9613008401	9613008402	9613008402	9613008402
55		1	Upper plug	9614233101	9614234001	9614234001	9614234501
56	♦	1	Seal ring, EPDM	9613095106	9613095109	9613095109	9613095119
	♦	1	Seal ring, NBR	9613095114	9613095115	9613095115	9613095120
	♦	1	Seal ring, FPM	9613095105	9613095108	9613095108	9613095118
	♦	1	Seal ring, HNBR	9613095104	9613095107	9613095107	9613095117
		1	Seal ring set, (10 pcs.) EPDM	8010023165	8010023166	8010023166	8010023167
57	♦	1	Lip seal, EPDM	9613008706	9613008711	9613008711	9613008711
	♦	1	Lip seal, NBR	9613008707	9613008712	9613008712	9613008712
	♦	1	Lip seal, FPM	9613008708	9613008713	9613008713	9613008713
	♦	1	Lip seal, HNBR	9613008709	9613008714	9613008714	9613008714

1.7

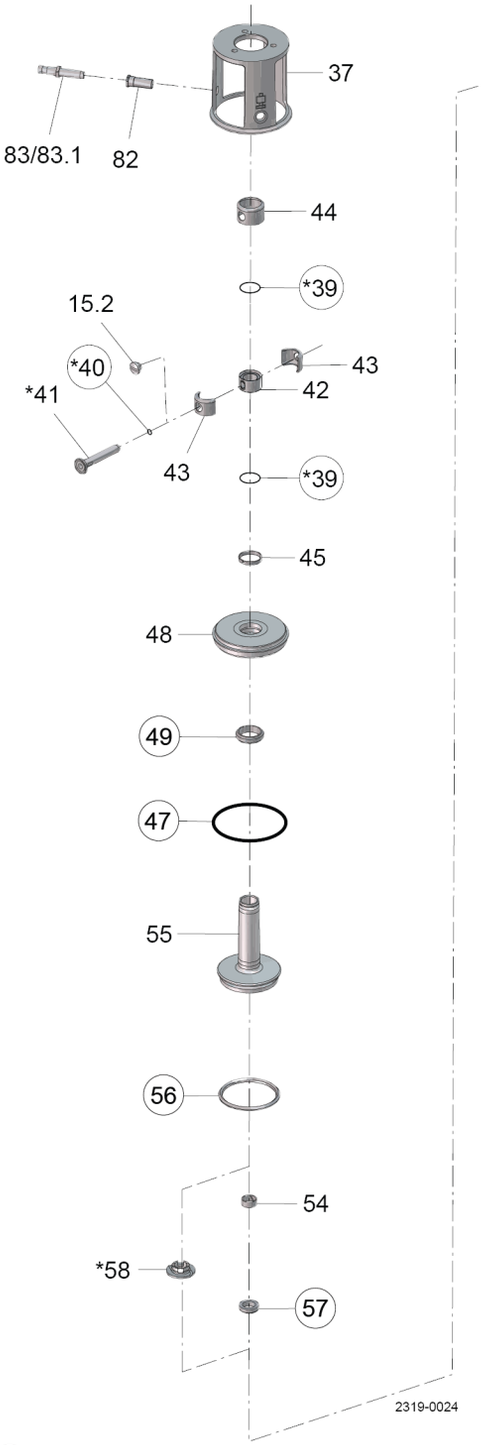

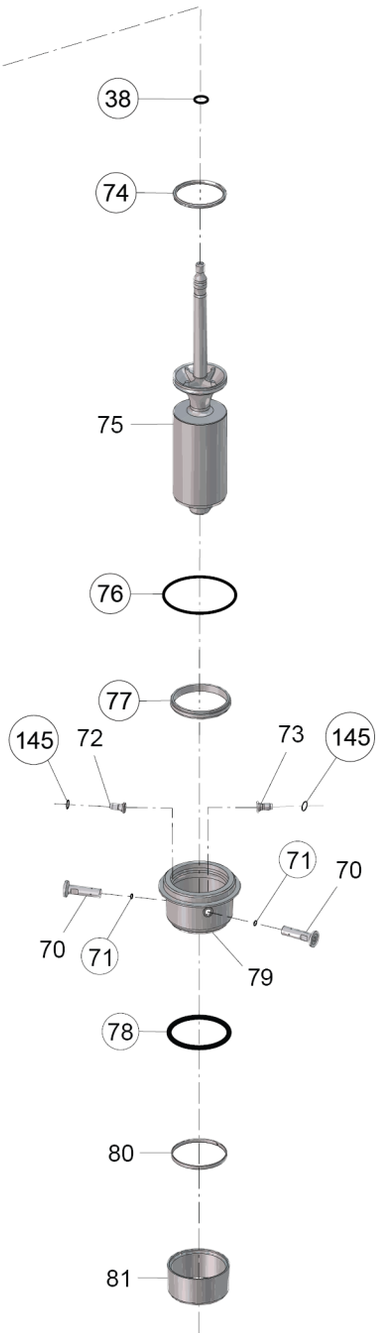

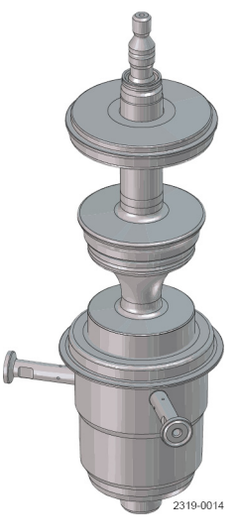

◯ = wear parts

★ = with SpiralClean in leakage chamber

Pos		Qty	Denomination	2”	2½”	3”	4”
Lower plug							
38	♦	1	O-ring, EPDM	9611993555	9611993572	9611993572	9611993572
		1	O-ring set, (10 pcs.) EPDM	8010023163	8010023164	8010023164	8010023164
74	♦	1	Seal ring, EPDM	9613095206	9613095209	9613095209	9613095219
	♦	1	Seal ring, NBR	9613095214	9613095215	9613095215	9613095220
	♦	1	Seal ring, FPM - Alfa Laval recommends EPDM	9613095205	9613095208	9613095208	9613095218
	♦	1	Seal ring, HNBR	9613095204	9613095207	9613095207	9613095217
		1	Seal ring set, (10 pcs.) EPDM	8010023169	8010023170	8010023170	8010023171
75		1	Lower plug	9614202938	9614201602	9614201602	9614217822
Lower sealing element							
70		2	Flushing tube	9614205802	9614205803	9614205803	9614205804
71	♦	2	O-ring, EPDM	9611995523	9611995523	9611995523	9611995523
72		1	Drain	9614205701	9614205701	9614205701	9614205701
73		1	Nozzle	9614205601	9614205601	9614205601	9614205601
145	♦	2	O-ring, EPDM	8010000690	8010000690	8010000690	8010000690
76	♦	1	O-ring, EPDM	9611993632	9611993636	9611993636	9611993640
	♦	1	O-ring, NBR	9611993633	9611993637	9611993637	9611993641
	♦	1	O-ring, FPM	9611993634	9611993638	9611993638	9611993642
	♦	1	O-ring, HNBR	9611993635	9611993639	9611993639	9611993643
77	♦	1	Lip seal, EPDM	9613008521	9613008526	9613008526	9613008548
	♦	1	Lip seal, NBR	9613008522	9613008527	9613008527	9613008549
	♦	1	Lip seal, FPM	9613008523	9613008528	9613008528	9613008550
	♦	1	Lip seal, HNBR	9613008524	9613008529	9613008529	9613008551
78	♦	1	O-ring, EPDM	9611993650	9611993651	9611993651	9611994407
79		1	Lower sealing element, (blasted/Ra1.6)	9614220701	9614220801	9614220801	9614220901
		1	Lower sealing element, (polished/Ra0.8	9614220702	9614220802	9614220802	9614220902
80		1	Guide ring, PTFE	9613008413	9613008414	9613008414	9613008420
81		1	Cover	9613049005	9613049006	9613049006	9613049015
Extra parts if clamped valve body							
52		1	O-ring, EPDM	9611993632	9611993636	9611993636	9611993640
		1	O-ring, NBR	9611993633	9611993637	9611993637	9611993641
		1	O-ring, FPM	9611993634	9611993638	9611993638	9611993642
		1	O-ring, HNBR	9611993635	9611993639	9611993639	9611993643

NOTE!
If clamped valve body an extra O-ring (pos. 52) is required.
If SpiralClean in leakage chamber, extra O-rings (2x pos. 39 and 1x pos. 40) is required.
Spare parts for mix size please refer to configurator in Alfa Laval Anytime

NOTE!
All FPM service kits are supplied with EPDM seal ring, pos. 74.

Service kits

		2” Seat ø53.3	2½” Seat ø81.3	3” Seat ø81.3	4” Seat ø100.3
♦	**Service kit, EPDM**	**9611928109**	**9611928113**	**9611928113**	**9611928117**
♦	**Service kit, NBR**	**9611928110**	**9611928114**	**9611928114**	**9611928118**
♦	**Service kit, FPM**	**9611928111**	**9611928115**	**9611928115**	**9611928119**
♦	**Service kit, HNBR**	**9611928112**	**9611928116**	**9611928116**	**9611928120**

For mixed size housings, the service kit is determined by the smallest size connection on the valve.

NOTE!
All FPM service kits are supplied with EPDM seal ring, pos. 74.

1.7

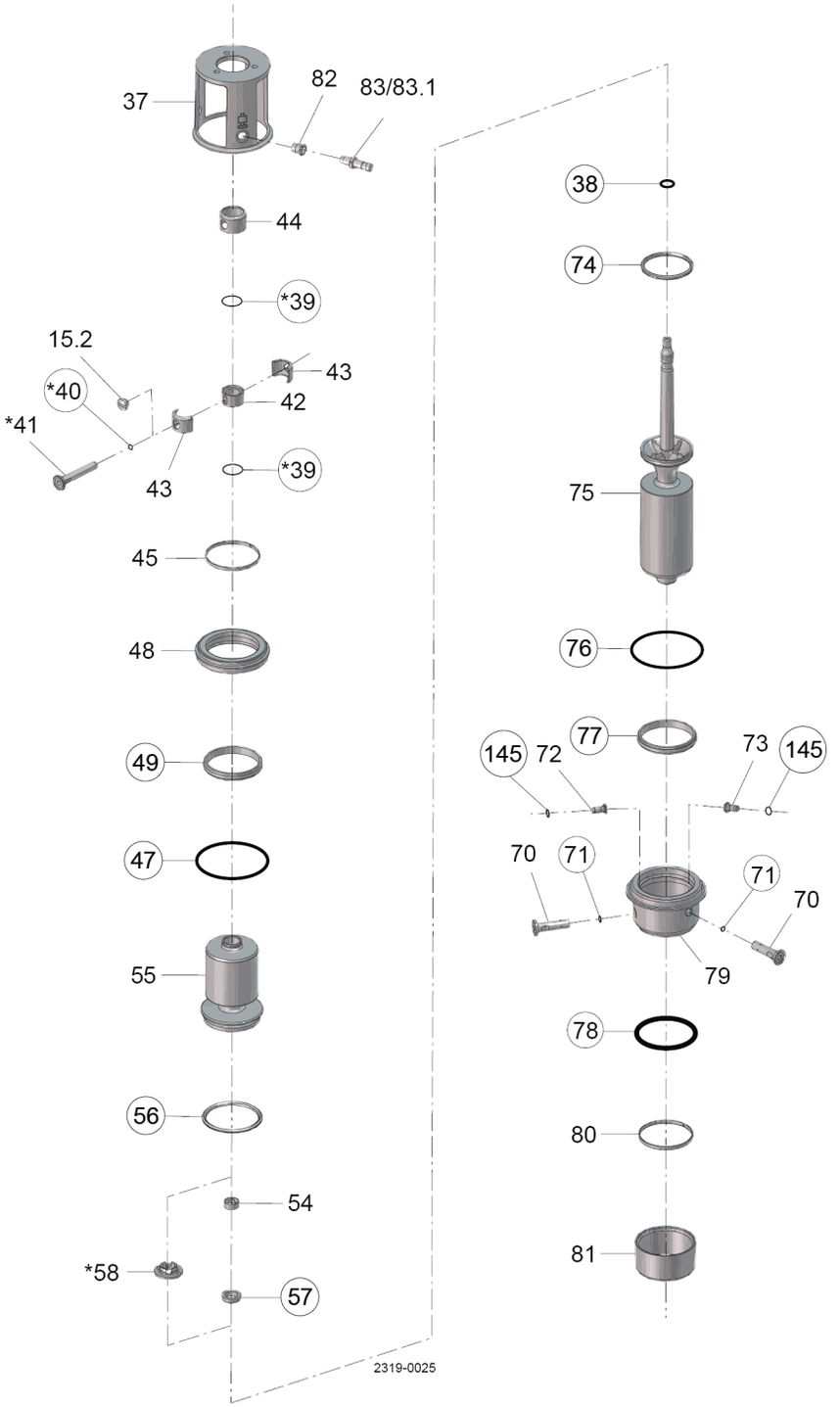

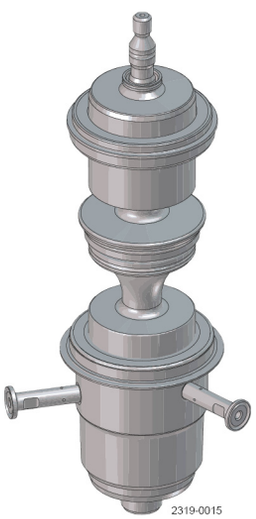

◯ = wear parts

✶ = with SpiralClean in leakage chamber

Pos		Qty	Denomination	1½"	2"	2½"	3"	4"
Intermediate parts								
37		1	Intermediate piece	9614255501	9614255901	9614256301	9614256303	9614256701
82	Δ	1	Bolt for indication	9614257508	9614257508	9614257508	9614257508	9614257508
83	Δ	1	Sensor for indication	9611995770	9611995770	9611995770	9611995770	9611995770
83.1		1	Cable for sensor for indication	9611994915	9611994915	9611994915	9611994915	9611994915
Spindle liner								
15.2		1	Plug	9615331901	9615331901	9615331901	9615331901	9615331901
42		1	Spindle liner	9614221101	9614221101	9614205301	9614205301	9614205301
43		2	Clamp	9613011801	9613011801	9613009201	9613009201	9613009201
44		1	Lock	9613011701	9613011701	9613009101	9613009101	9613009101
Extra parts if SpiralClean in leakage chamber								
39		2	O-ring, EPDM	9611993492	9611993492	9611993493	9611993493	9611993493
40		1	O-ring, EPDM	9611995521	9611995521	9611995521	9611995521	9611995521
41		1	Flushing tube	9613205401	9613205401	9614205402	9614205402	9614205403
58		1	Spray nozzle, PVDF	9613221301	9613221301	9614221201	9614221201	9614221201
Upper sealing element								
45		1	Guide ring, PTFE	9613008412	9613008413	9613008414	9613008414	9613008420
47	♦	1	O-ring, EPDM	9611993628	9611993632	9611993636	9611993636	9611993640
	♦	1	O-ring, NBR	9611993629	9611993633	9611993637	9611993637	9611993641
	♦	1	O-ring, FPM	9611993630	9611993634	9611993638	9611993638	9611993642
	♦	1	O-ring, HNBR	9611993631	9611993635	9611993639	9611993639	9611993643
48		1	Upper sealing element, (blasted/Ra1.6)	9613015701	9613014202	9613006402	9613006402	9613066001
		1	Upper sealing element, (polished/Ra0.8)	9613015702	9613014204	9613006404	9613006404	9613066002
49	♦	1	Lip seal, EPDM	9613008516	9613008521	9613008526	9613008526	9613008548
	♦	1	Lip seal, NBR	9613008517	9613008522	9613008527	9613008527	9613008549
	♦	1	Lip seal, FPM	9613008518	9613008523	9613008528	9613008528	9613008550
	♦	1	Lip seal, HNBR	9613008519	9613008524	9613008529	9613008529	9613008551
Upper plug								
54		1	Guide ring, PTFE	9613008401	9613008401	9613008402	9613008402	9613008402
55		1	Upper plug	9614232501	9614233109	9614234007	9614234007	9614234505
56	♦	1	Seal ring, EPDM	9613095106	9613095106	9613095109	9613095109	9613095119
	♦	1	Seal ring, NBR	9613095114	9613095114	9613095115	9613095115	9613095120
	♦	1	Seal ring, FPM	9613095105	9613095105	9613095108	9613095108	9613095118
	♦	1	Seal ring, HNBR	9613095104	9613095104	9613095107	9613095107	9613095117
		1	Seal ring set, (10 pcs.) EPDM	8010023165	8010023165	8010023166	8010023166	8010023167
57	♦	1	Lip seal, EPDM	9613008706	9613008706	9613008711	9613008711	9613008711
	♦	1	Lip seal, NBR	9613008707	9613008707	9613008712	9613008712	9613008712
	♦	1	Lip seal, FPM	9613008708	9613008708	9613008713	9613008713	9613008713
	♦	1	Lip seal, HNBR	9613008709	9613008709	9613008714	9613008714	9613008714

1.7

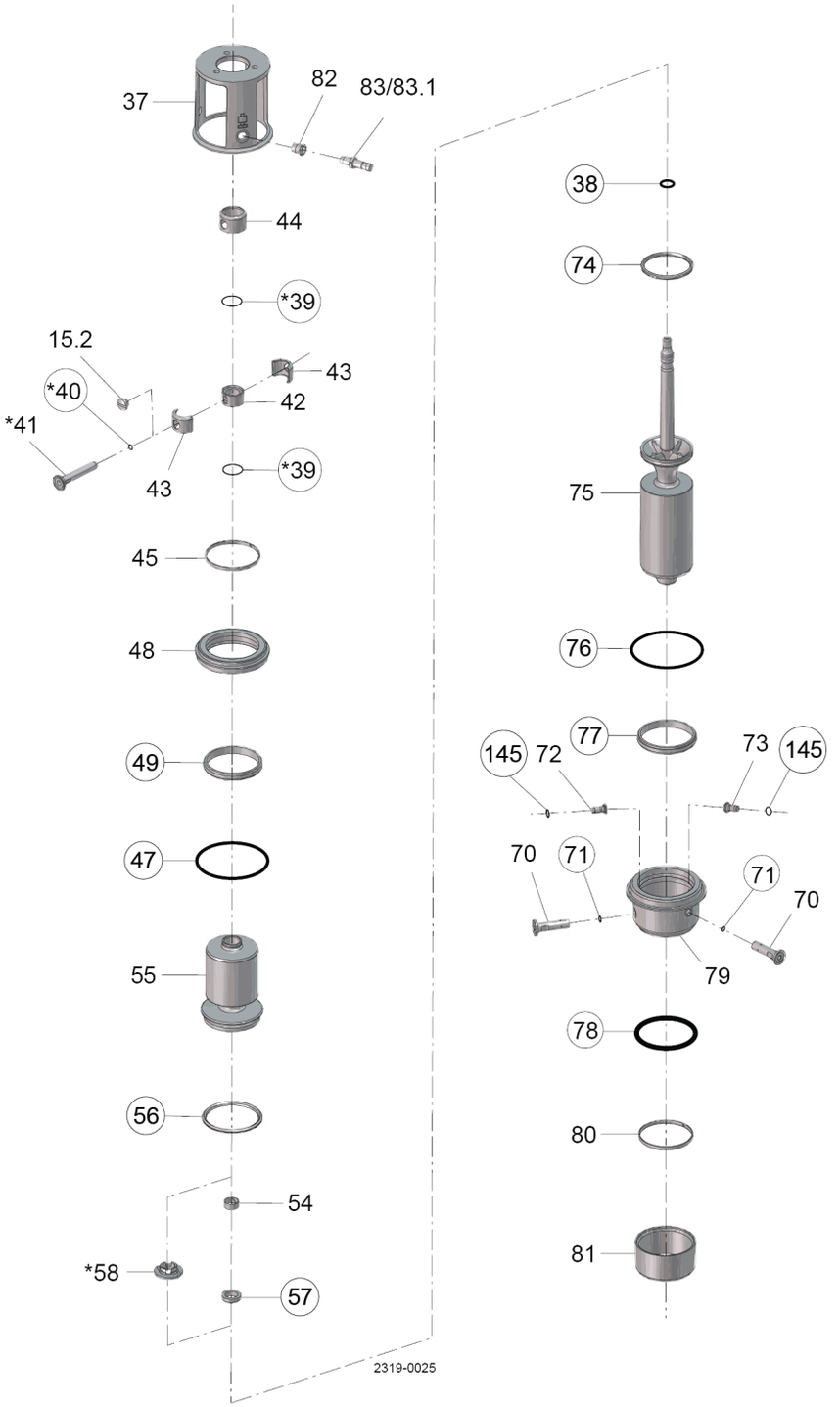

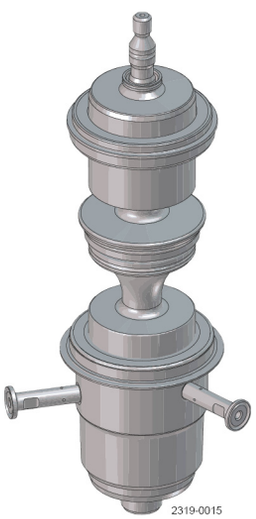

◯ = wear parts

✶ = with SpiralClean in leakage chamber

Pos		Qty	Denomination	1½"	2"	2½"	3"	4"
Lower plug								
38	♦	1	O-ring, EPDM	9611993555	9611993555	9611993572	9611993572	9611993572
		1	O-ring set, (10 pcs.) EPDM	8010023163	8010023163	8010023164	8010023164	8010023164
74	♦	1	Seal ring, EPDM	9613095206	9613095206	9613095209	9613095209	9613095219
	♦	1	Seal ring, NBR	9613095214	9613095214	9613095215	9613095215	9613095220
	♦	1	Seal ring, FPM - Alfa Laval recommends EPDM	9613095205	9613095205	9613095208	9613095208	9613095218
	♦	1	Seal ring, HNBR	9613095204	9613095204	9613095207	9613095207	9613095217
		1	Seal ring set, (10 pcs.) EPDM	8010023169	8010023169	8010023170	8010023170	8010023171
75		1	Lower plug	9614202902	9614202938	9614201602	9614201602	9614217822
Lower sealing element								
70		2	Flushing tube	9614205801	9614205802	9614205803	9614205803	9614205804
71	♦	2	O-ring, EPDM	9611995523	9611995523	9611995523	9611995523	9611995523
72		1	Drain	8010000689	9614205701	9614205701	9614205701	9614205701
73		1	Nozzle	8010000688	9614205601	9614205601	9614205601	9614205601
145	♦	2	O-ring, EPDM	8010000690	8010000690	8010000690	8010000690	8010000690
76	♦	1	O-ring, EPDM	9611993628	9611993632	9611993636	9611993636	9611993640
	♦	1	O-ring, NBR	9611993629	9611993633	9611993637	9611993637	9611993641
	♦	1	O-ring, FPM	9611993630	9611993634	9611993638	9611993638	9611993642
	♦	1	O-ring, HNBR	9611993631	9611993635	9611993639	9611993639	9611993643
77	♦	1	Lip seal, EPDM	9613008516	9613008521	9613008526	9613008526	9613008548
	♦	1	Lip seal, NBR	9613008517	9613008522	9613008527	9613008527	9613008549
	♦	1	Lip seal, FPM	9613008518	9613008523	9613008528	9613008528	9613008550
	♦	1	Lip seal, HNBR	9613008519	9613008524	9613008529	9613008529	9613008551
78	♦	1	O-ring, EPDM	9611993655	9611993650	9611993651	9611993651	9611994407
79		1	Lower sealing element, (blasted/Ra1.6)	9614220501	9614220701	9614220801	9614220801	9614220901
		1	Lower sealing element, (polished/Ra0.8)	9614220502	9614220702	9614220802	9614220802	9614220902
80		1	Guide ring, PTFE	9613008412	9613008413	9613008414	9613008414	9613008420
81		1	Cover	9613049001	9613049005	9613049006	9613049006	9613049015
Extra parts if clamped valve body								
52		1	O-ring, EPDM	9611993628	9611993632	9611993636	9611993636	9611993640
		1	O-ring, NBR	9611993629	9611993633	9611993637	9611993637	9611993641
		1	O-ring, FPM	9611993630	9611993634	9611993638	9611993638	9611993642
		1	O-ring, HNBR	9611993631	9611993635	9611993639	9611993639	9611993643

NOTE!
If clamped valve body an extra O-ring (pos. 52) is required.
If SpiralClean in leakage chamber, extra O-rings (2x pos. 39 and 1x pos. 40) is required.
Δ Sensor service kit for valves delivered prior to October 2015 - 9611928351
Spare parts for mix size please refer to configurator in Alfa Laval Anytime

NOTE!
All FPM service kits are supplied with EPDM seal ring, pos. 74.

Service kits

		1½" Seat ø53.3	2" Seat ø53.3	2½" Seat ø81.3	3" Seat ø81.3	4" Seat ø100.3
♦	Service kit, EPDM	9611928017	9611928021	9611928025	9611928025	9611928029
♦	Service kit, NBR	9611928018	9611928022	9611928026	9611928026	9611928030
♦	Service kit, FPM	9611928019	9611928023	9611928027	9611928027	9611928031
♦	Service kit, HNBR	9611928020	9611928024	9611928028	9611928028	9611928032

For mixed size housings, the service kit is determined by the smallest size connection on the valve.

NOTE!
All FPM service kits are supplied with EPDM seal ring, pos. 74.

1.7

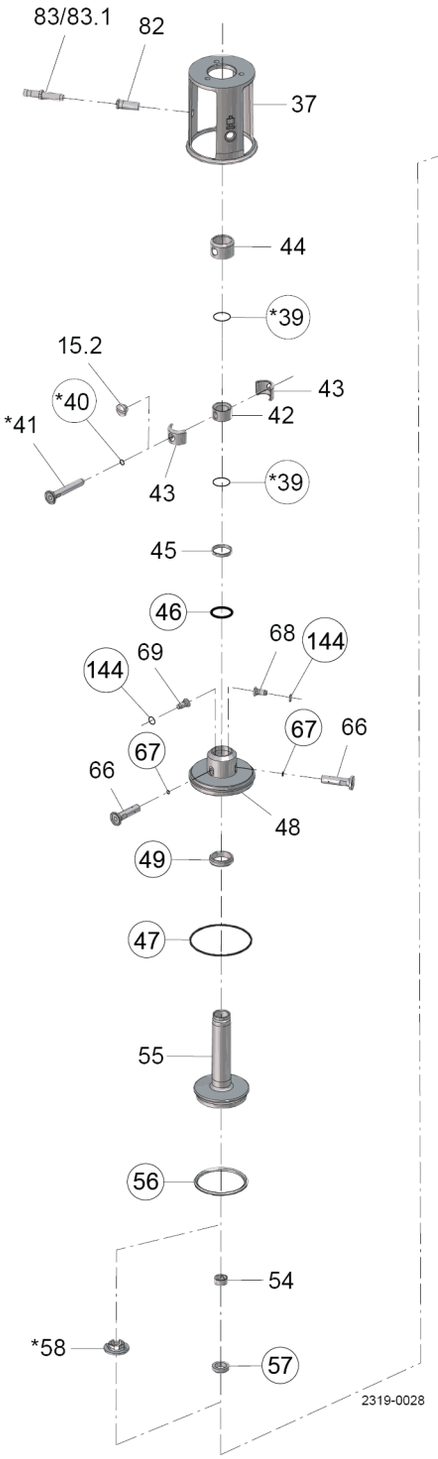

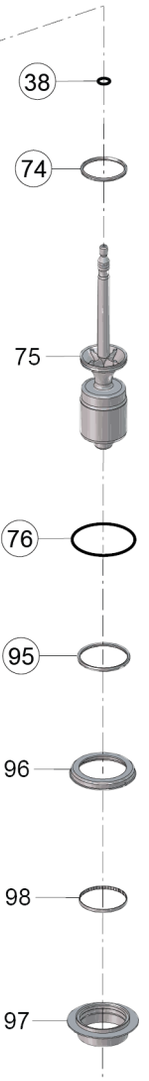

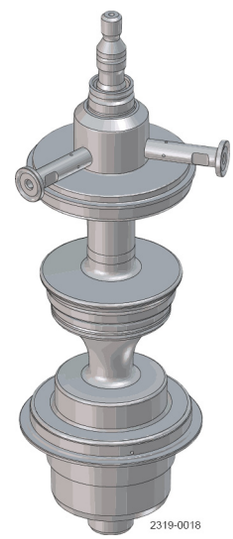

◯ = wear parts

★ = with SpiralClean in leakage chamber

Pos		Qty	Denomination	2”	2½”	3”	4”
Intermediate parts							
37		1	Intermediate piece	9614255902	9614256302	9614256304	9614256702
82		1	Bolt for indication	9614257508	9614257508	9614257508	9614257508
83		1	Sensor for indication	9611995199	9611995199	9611995199	9611995199
83.1		1	Cable for sensor for indication	9611994915	9611994915	9611994915	9611994915
Spindle liner							
15.2		1	Plug	9615331901	9615331901	9615331901	9615331901
42		1	Spindle liner	9614221101	9614205301	9614205301	9614205301
43		2	Clamp	9613011801	9613009201	9613009201	9613009201
44		1	Lock	9613011701	9613009101	9613009101	9613009101
Extra parts if SpiralClean in leakage chamber							
39		2	O-ring, EPDM	9611993492	9611993493	9611993493	9611993493
40		1	O-ring, EPDM	9611995521	9611995521	9611995521	9611995521
41		1	Flushing tube	9613205401	9614205402	9614205402	9614205403
58		1	Spray nozzle, PVDF	9613221301	9614221201	9614221201	9614221201
Upper sealing element							
45		1	Guide ring, PTFE	9613008416	9613008417	9613008417	9613008417
46	♦	1	O-ring, EPDM	9611993653	9611993654	9611993654	9611993654
47	♦	1	O-ring, EPDM	9611993632	9611993636	9611993636	9611993640
	♦	1	O-ring, NBR	9611993633	9611993637	9611993637	9611993641
	♦	1	O-ring, FPM	9611993634	9611993638	9611993638	9611993642
	♦	1	O-ring, HNBR	9611993635	9611993639	9611993639	9611993643
48		1	Upper sealing element, (blasted/Ra1.6)	9614220201	9614220301	9614220301	9614220401
		1	Upper sealing element, (polished/Ra0.8)	9614220202	9614220302	9614220302	9614220402
49	♦	1	Lip seal, EPDM	9613008501	9613008511	9613008511	9613008511
	♦	1	Lip seal, NBR	9613008502	9613008512	9613008512	9613008512
	♦	1	Lip seal, FPM	9613008503	9613008513	9613008513	9613008513
	♦	1	Lip seal, HNBR	9613008504	9613008514	9613008514	9613008514
66		2	Flushing tube	9614205802	9614205803	9614205803	9614205804
67	♦	2	O-ring, EPDM	9611995523	9611995523	9611995523	9611995523
68		1	Drain	8010000689	8010000689	8010000689	8010000689
69		1	Nozzle	8010000688	8010000688	8010000688	8010000688
144	♦	2	O-ring, EPDM	8010000690	8010000690	8010000690	8010000690
Upper plug							
54		1	Guide ring, PTFE	9613008401	9613008402	9613008402	9613008402
55		1	Upper plug	9614233102	9614234002	9614234002	9614234502
56	♦	1	Seal ring, EPDM	9613095106	9613095109	9613095109	9613095119
	♦	1	Seal ring, NBR	9613095114	9613095115	9613095115	9613095120
	♦	1	Seal ring, FPM	9613095105	9613095108	9613095108	9613095118
	♦	1	Seal ring, HNBR	9613095104	9613095107	9613095107	9613095117
		1	Seal ring set, (10 pcs.) EPDM	8010023165	8010023166	8010023166	8010023167
57	♦	1	Lip seal, EPDM	9613008706	9613008711	9613008711	9613008711
	♦	1	Lip seal, NBR	9613008707	9613008712	9613008712	9613008712
	♦	1	Lip seal, FPM	9613008708	9613008713	9613008713	9613008713
	♦	1	Lip seal, HNBR	9613008709	9613008714	9613008714	9613008714

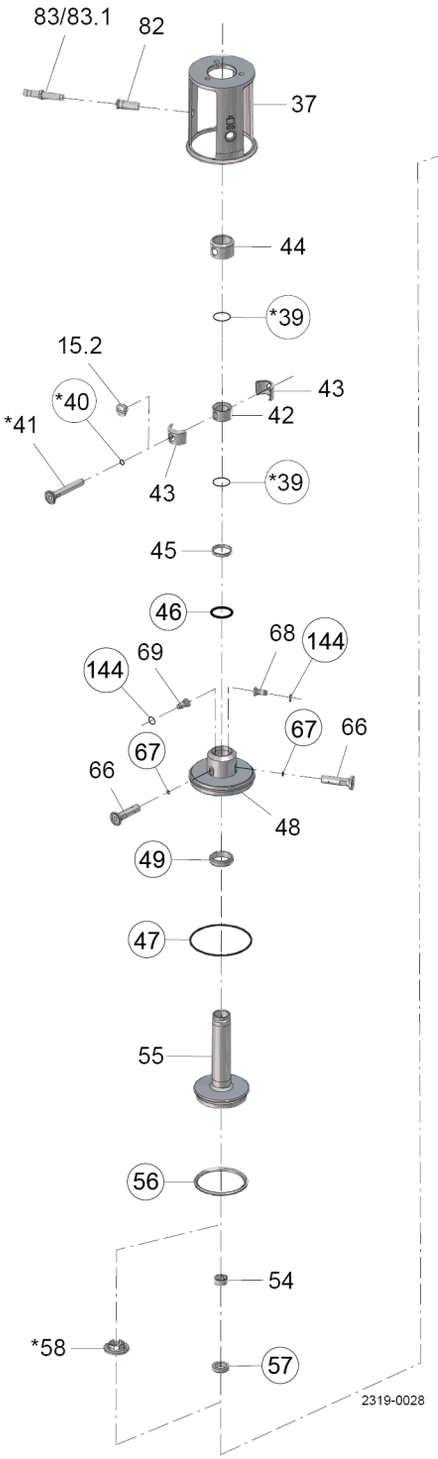

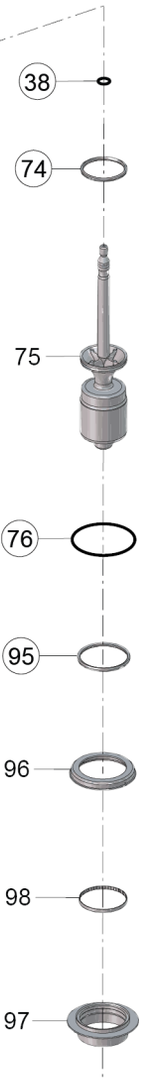

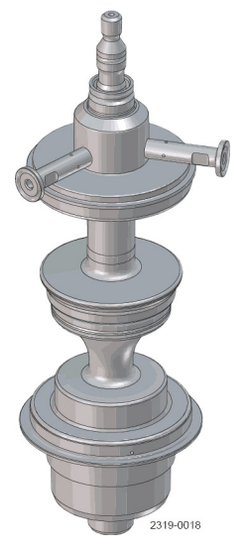

◯ = wear parts

★ = with SpiralClean in leakage chamber

Pos		Qty	Denomination	2”	2½”	3”	4”
Lower plug							
38	♦	1	O-ring, EPDM	9611993555	9611993572	9611993572	9611993572
		1	O-ring set, (10 pcs.) EPDM	8010023163	8010023164	8010023164	8010023164
74	♦	1	Seal ring, EPDM	9613095206	9613095209	9613095209	9613095219
	♦	1	Seal ring, NBR	9613095214	9613095215	9613095215	9613095220
	♦	1	Seal ring, FPM - Alfa Laval recommends EPDM	9613095205	9613095208	9613095208	9613095218
	♦	1	Seal ring, HNBR	9613095204	9613095207	9613095207	9613095217
		1	Seal ring set, (10 pcs.) EPDM	8010023169	8010023170	8010023170	8010023171
75		1	Lower plug	9614204822	9614201622	9614201634	9614217802
Lower sealing element							
76	♦	1	O-ring, EPDM	9611993632	9611993636	9611993636	9611993640
	♦	1	O-ring, NBR	9611993633	9611993637	9611993637	9611993641
	♦	1	O-ring, FPM	9611993634	9611993638	9611993638	9611993642
	♦	1	O-ring, HNBR	9611993635	9611993639	9611993639	9611993643
95	♦	1	Special lip seal, EPDM	9613464215	9613464203	9613464203	9613464219
	♦	1	Special lip seal, NBR	9613464216	9613464204	9613464204	9613464220
	♦	1	Special lip seal, HNBR	9613464213	9613464201	9613464201	9613464217
	♦	1	Special lip seal, FPM	9613464214	9613464202	9613464202	9613464218
96		1	Lower sealing element, upper part	9613475801	9613465201	9613465201	9613476001
97		1	Lower sealing element, lower part	9613475901	9613465301	9613465301	9613476101
98		1	Guide ring, Turcite	9613466104	9613466101	9613466101	9613466105
Extra parts if clamped valve body							
52		1	O-ring, EPDM	9611993632	9611993636	9611993636	9611993640
		1	O-ring, NBR	9611993633	9611993637	9611993637	9611993641
		1	O-ring, FPM	9611993634	9611993638	9611993638	9611993642
		1	O-ring, HNBR	9611993635	9611993639	9611993639	9611993643

NOTE!
If clamped valve body an extra O-ring (pos. 52) is required.
If SpiralClean in leakage chamber, extra O-rings (2x pos. 39 and 1x pos. 40) is required.
Spare parts for mix size please refer to configurator in Alfa Laval Anytime

NOTE!
All FPM service kits are supplied with EPDM seal ring, pos. 74.

Service kits

		2” Seat ø53.3	2½” Seat ø81.3	3” Seat ø81.3	4” Seat ø100.3
♦	Service kit, EPDM	9611928221	9611928225	9611928225	9611928229
♦	Service kit, NBR	9611928222	9611928226	9611928226	9611928230
♦	Service kit, FPM	9611928223	9611928227	9611928227	9611928231
♦	Service kit, HNBR	9611928224	9611928228	9611928228	9611928232

For mixed size housings, the service kit is determined by the smallest size connection on the valve.

NOTE!
All FPM service kits are supplied with EPDM seal ring, pos. 74.

1.7

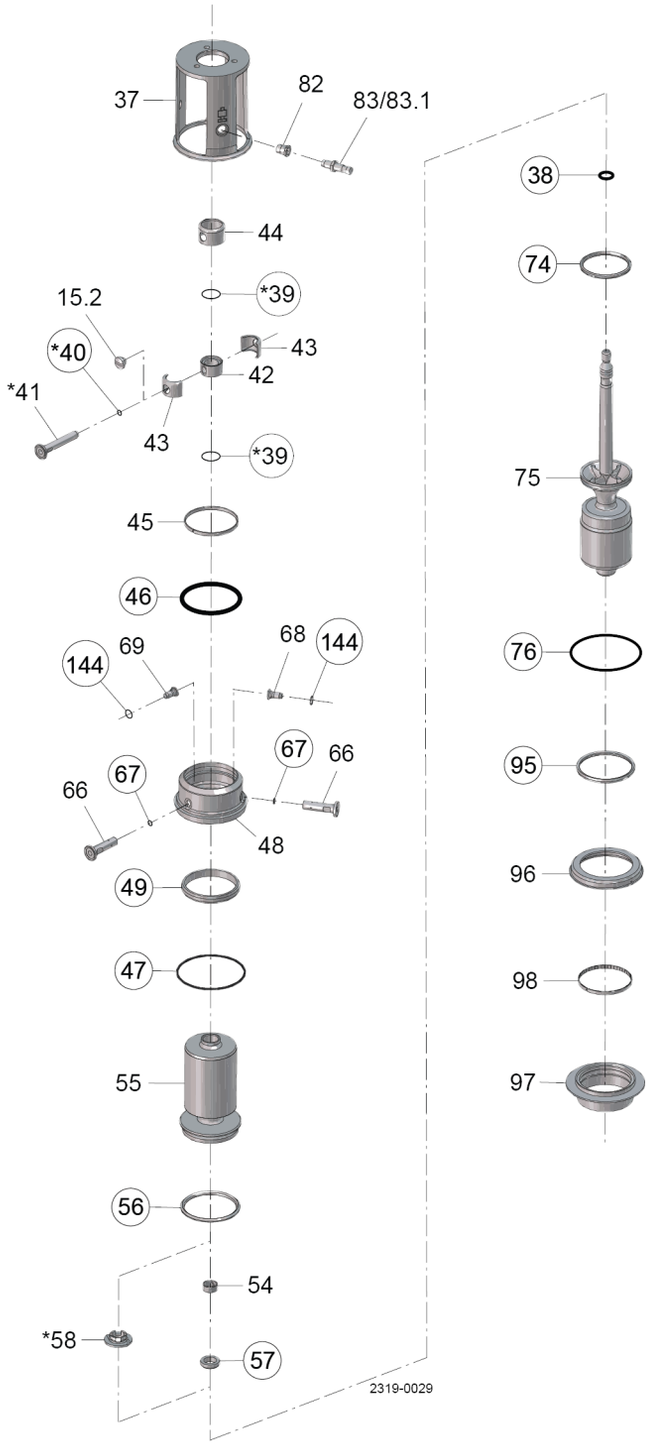

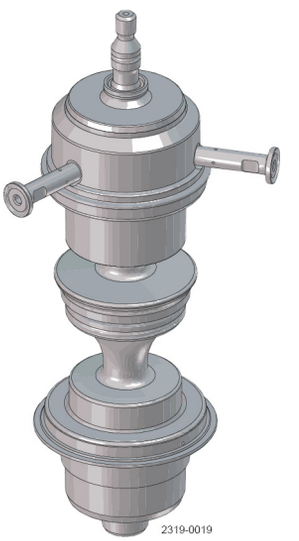

○ = wear parts

★ = with SpiralClean in leakage chamber

Pos		Qty	Denomination	1½"	2"	2½"	3"	4"
Intermediate parts								
37		1	Intermediate piece	9614255502	9614255902	9614256302	9614256304	9614256702
82	Δ	1	Bolt for indication	9614257508	9614257508	9614257508	9614257508	9614257508
83	Δ	1	Sensor for indication	9611995770	9611995770	9611995770	9611995770	9611995770
83.1		1	Cable for sensor for indication	9611994915	9611994915	9611994915	9611994915	9611994915
Spindle liner								
15.2		1	Plug	9615331901	9615331901	9615331901	9615331901	9615331901
42		1	Spindle liner	9614221101	9614221101	9614205301	9614205301	9614205301
43		2	Clamp	9613011801	9613011801	9613009201	9613009201	9613009201
44		1	Lock	9613011701	9613011701	9613009101	9613009101	9613009101
Extra parts if SpiralClean in leakage chamber								
39		2	O-ring, EPDM	9611993492	9611993492	9611993493	9611993493	9611993493
40		1	O-ring, EPDM	9611995521	9611995521	9611995521	9611995521	9611995521
41		1	Flushing tube	9613205401	9613205401	9614205402	9614205402	9614205403
58		1	Spray nozzle, PVDF	9613221301	9613221301	9614221201	9614221201	9614221201
Upper sealing element								
45		1	Guide ring, PTFE	9613008412	9613008413	9613008414	9613008414	9613008420
46	♦	1	O-ring, EPDM	9611993655	9611993650	9611993651	9611993651	9611994407
47	♦	1	O-ring, EPDM	9611993628	9611993632	9611993636	9611993636	9611993640
	♦	1	O-ring, NBR	9611993629	9611993633	9611993637	9611993637	9611993641
	♦	1	O-ring, FPM	9611993630	9611993634	9611993638	9611993638	9611993642
	♦	1	O-ring, HNBR	9611993631	9611993635	9611993639	9611993639	9611993643
48		1	Upper sealing element, (blasted/Ra1.6)	9614220101	9614219801	9614205901	9614205901	9614219901
		1	Upper sealing element, (polished/Ra0.8)	9614220102	9614219802	9614205902	9614205902	9614219902
49	♦	1	Lip seal, EPDM	9613008516	9613008521	9613008526	9613008526	9613008548
	♦	1	Lip seal, NBR	9613008517	9613008522	9613008527	9613008527	9613008549
	♦	1	Lip seal, FPM	9613008518	9613008523	9613008528	9613008528	9613008550
	♦	1	Lip seal, HNBR	9613008519	9613008524	9613008529	9613008529	9613008551
66		2	Flushing tube	9614205801	9614205802	9614205803	9614205803	9614205804
67	♦	2	O-ring, EPDM	9611995523	9611995523	9611995523	9611995523	9611995523
68		1	Drain	8010000689	8010000689	8010000689	8010000689	9614205701
69		1	Nozzle	8010000688	8010000688	8010000688	8010000688	9614205601
144	♦	2	O-ring, EPDM	8010000690	8010000690	8010000690	8010000690	8010000690
Upper plug								
54		1	Guide ring, PTFE	9613008401	9613008401	9613008402	9613008402	9613008402
55		1	Upper plug	9614232502	9614233110	9614234008	9614234008	9614234506
56	♦	1	Seal ring, EPDM	9613095106	9613095106	9613095109	9613095109	9613095119
	♦	1	Seal ring, NBR	9613095114	9613095114	9613095115	9613095115	9613095120
	♦	1	Seal ring, FPM	9613095105	9613095105	9613095108	9613095108	9613095118
	♦	1	Seal ring, HNBR	9613095104	9613095104	9613095107	9613095107	9613095117
		1	Seal ring set, (10 pcs.) EPDM	8010023165	8010023165	8010023166	8010023166	8010023167
57	♦	1	Lip seal, EPDM	9613008706	9613008706	9613008711	9613008711	9613008711
	♦	1	Lip seal, NBR	9613008707	9613008707	9613008712	9613008712	9613008712
	♦	1	Lip seal, FPM	9613008708	9613008708	9613008713	9613008713	9613008713
	♦	1	Lip seal, HNBR	9613008709	9613008709	9613008714	9613008714	9613008714

1.7

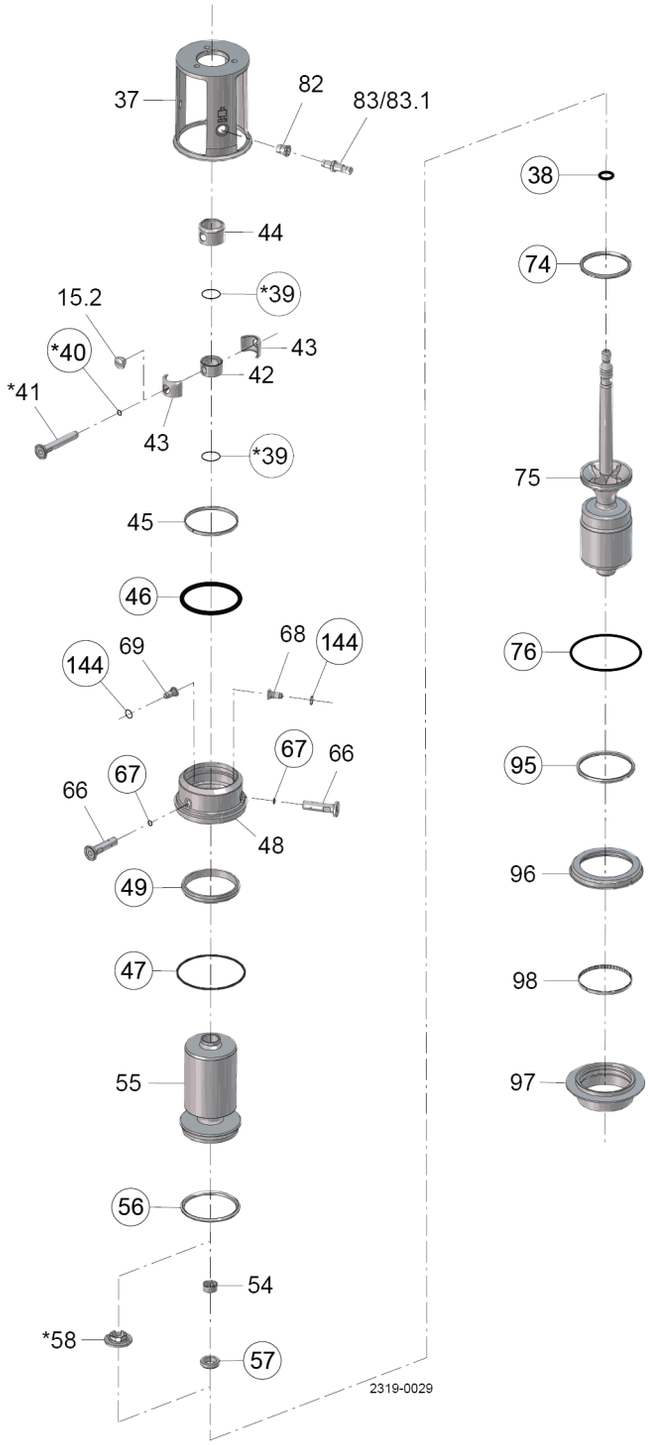

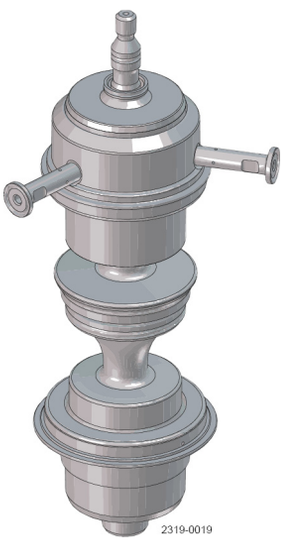

◯ = wear parts

✶ = with SpiralClean in leakage chamber

Pos		Qty	Denomination	1½"	2"	2½"	3"	4"
Lower plug								
38	♦	1	O-ring, EPDM	9611993555	9611993555	9611993572	9611993572	9611993572
		1	O-ring set, (10 pcs.) EPDM	8010023163	8010023163	8010023164	8010023164	8010023164
74	♦	1	Seal ring, EPDM	9613095206	9613095206	9613095209	9613095209	9613095219
	♦	1	Seal ring, NBR	9613095214	9613095214	9613095215	9613095215	9613095220
	♦	1	Seal ring, FPM - Alfa Laval recommends EPDM	9613095205	9613095205	9613095208	9613095208	9613095218
	♦	1	Seal ring, HNBR	9613095204	9613095204	9613095207	9613095207	9613095217
		1	Seal ring set, (10 pcs.) EPDM	8010023169	8010023169	8010023170	8010023170	8010023171
75		1	Lower plug	9614202966	9614204822	9614201622	9614201634	9614217802
Lower sealing element								
76	♦	1	O-ring, EPDM	9611993628	9611993632	9611993636	9611993636	9611993640
	♦	1	O-ring, NBR	9611993629	9611993633	9611993637	9611993637	9611993641
	♦	1	O-ring, FPM	9611993630	9611993634	9611993638	9611993638	9611993642
	♦	1	O-ring, HNBR	9611993631	9611993635	9611993639	9611993639	9611993643
95	♦	1	Special lip seal, EPDM	9613464259	9613464215	9613464203	9613464203	9613464219
	♦	1	Special lip seal, NBR	9613464260	9613464216	9613464204	9613464204	9613464220
	♦	1	Special lip seal, HNBR	9613464257	9613464213	9613464201	9613464201	9613464217
	♦	1	Special lip seal, FPM	9613464258	9613464214	9613464202	9613464202	9613464218
96		1	Lower sealing element, upper part	9614257701	9613475801	9613465201	9613465201	9613476001
97		1	Lower sealing element, lower part	9614257801	9613475901	9613465301	9613465301	9613476101
98		1	Guide ring, Turcite	9613466111	9613466104	9613466101	9613466101	9613466105
Extra parts if clamped valve body								
52		1	O-ring, EPDM	9611993628	9611993632	9611993636	9611993636	9611993640
		1	O-ring, NBR	9611993629	9611993633	9611993637	9611993637	9611993641
		1	O-ring, FPM	9611993630	9611993634	9611993638	9611993638	9611993642
		1	O-ring, HNBR	9611993631	9611993635	9611993639	9611993639	9611993643

NOTE!
If clamped valve body an extra O-ring (pos. 52) is required.
If SpiralClean in leakage chamber extra O-rings (2x pos. 39 and 1x pos. 40) is required.
Δ Sensor service kit for valves delivered prior to October 2015 - 9611928351
Spare parts for mix size please refer to configurator in Alfa Laval Anytime

NOTE!
All FPM service kits are supplied with EPDM seal ring, pos. 74.

Service kits

		1½" Seat ø53.3	2" Seat ø53.3	2½" Seat ø81.3	3" Seat ø81.3	4" Seat ø100.3
♦	**Service kit, EPDM**	**9611928237**	**9611928241**	**9611928245**	**9611928245**	**9611928249**
♦	**Service kit, NBR**	**9611928238**	**9611928242**	**9611928246**	**9611928246**	**9611928250**
♦	**Service kit, FPM**	**9611928239**	**9611928243**	**9611928247**	**9611928247**	**9611928251**
♦	**Service kit, HNBR**	**9611928240**	**9611928244**	**9611928248**	**9611928248**	**9611928252**

For mixed size housings, the service kit is determined by the smallest size connection on the valve.

NOTE!
All FPM service kits are supplied with EPDM seal ring, pos. 74.

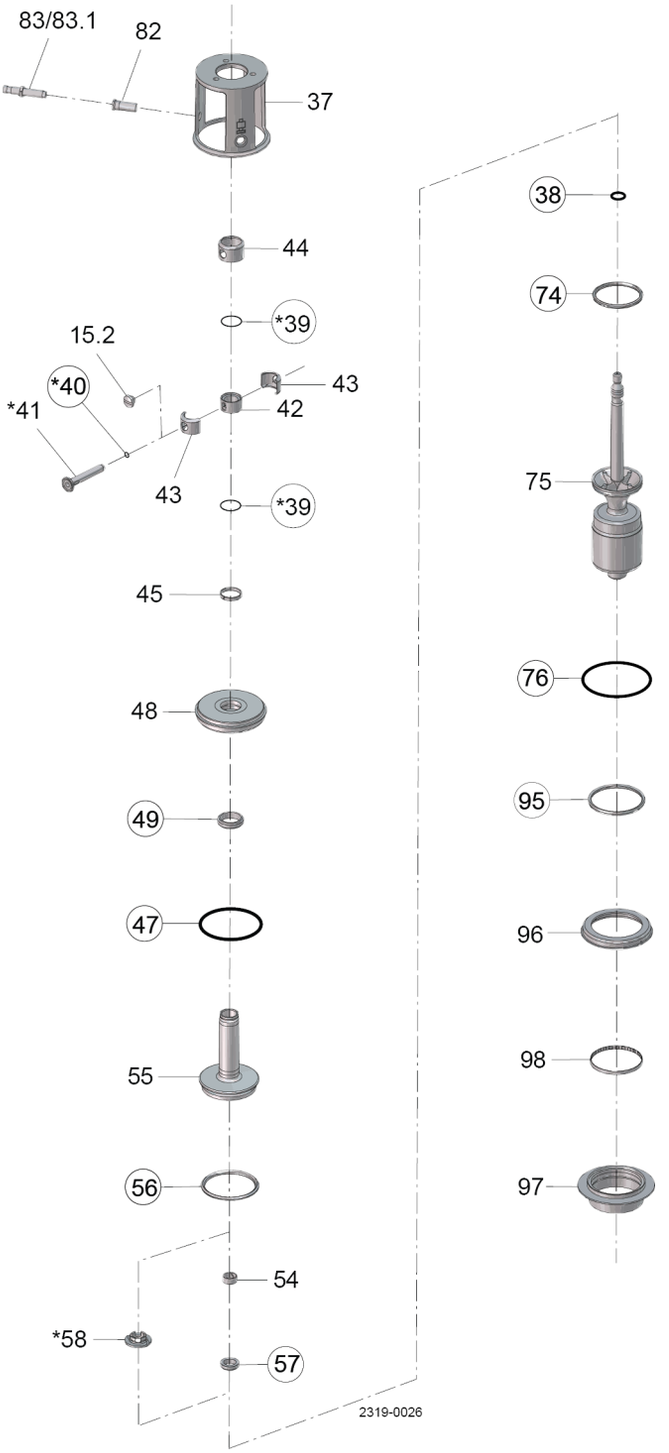

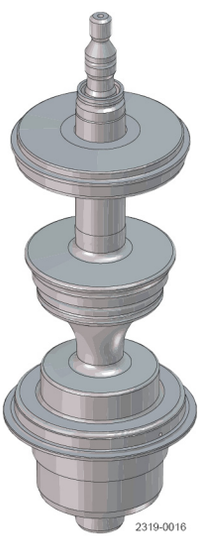

◯ = wear parts

✶ = with SpiralClean in leakage chamber

Pos		Qty	Denomination	2”	2½”	3”	4”
Intermediate parts							
37		1	Intermediate piece	9614255901	9614256301	9614256303	9614256701
82		1	Bolt for indication	9614257508	9614257508	9614257508	9614257508
83		1	Sensor for indication	9611995199	9611995199	9611995199	9611995199
83.1		1	Cable for sensor for indication	9611994915	9611994915	9611994915	9611994915
Spindle liner							
15.2		1	Plug	9615331901	9615331901	9615331901	9615331901
42		1	Spindle liner	9614221101	9614205301	9614205301	9614205301
43		2	Clamp	9613011801	9613009201	9613009201	9613009201
44		1	Lock	9613011701	9613009101	9613009101	9613009101
Extra parts if SpiralClean in leakage chamber							
39		2	O-ring, EPDM	9611993492	9611993493	9611993493	9611993493
40		1	O-ring, EPDM	9611995521	9611995521	9611995521	9611995521
41		1	Flushing tube	9613205401	9614205402	9614205402	9614205403
58		1	Spray nozzle, PVDF	9613221301	9614221201	9614221201	9614221201
Upper sealing element							
45		1	Guide ring, PTFE	9613008416	9613008417	9613008417	9613008417
47	♦	1	O-ring, EPDM	9611993632	9611993636	9611993636	9611993640
	♦	1	O-ring, NBR	9611993633	9611993637	9611993637	9611993641
	♦	1	O-ring, FPM	9611993634	9611993638	9611993638	9611993642
	♦	1	O-ring, HNBR	9611993635	9611993639	9611993639	9611993643
48		1	Upper sealing element, (blasted/Ra1.6)	9613014201	9613006401	9613006401	9613018801
		1	Upper sealing element, (polished/Ra0.8)	9613014203	9613006403	9613006403	9613018803
49	♦	1	Lip seal, EPDM	9613008501	9613008511	9613008511	9613008511
	♦	1	Lip seal, NBR	9613008502	9613008512	9613008512	9613008512
	♦	1	Lip seal, FPM	9613008503	9613008513	9613008513	9613008513
	♦	1	Lip seal, HNBR	9613008504	9613008514	9613008514	9613008514
Upper plug							
54		1	Guide ring, PTFE	9613008401	9613008402	9613008402	9613008402
55		1	Upper plug	9614233101	9614234001	9614234001	9614234501
56	♦	1	Seal ring, EPDM	9613095106	9613095109	9613095109	9613095119
	♦	1	Seal ring, NBR	9613095114	9613095115	9613095115	9613095120
	♦	1	Seal ring, FPM	9613095105	9613095108	9613095108	9613095118
	♦	1	Seal ring, HNBR	9613095104	9613095107	9613095107	9613095117
		1	Seal ring set, (10 pcs.) EPDM	8010023165	8010023166	8010023166	8010023167
57	♦	1	Lip seal, EPDM	9613008706	9613008711	9613008711	9613008711
	♦	1	Lip seal, NBR	9613008707	9613008712	9613008712	9613008712
	♦	1	Lip seal, FPM	9613008708	9613008713	9613008713	9613008713
	♦	1	Lip seal, HNBR	9613008709	9613008714	9613008714	9613008714

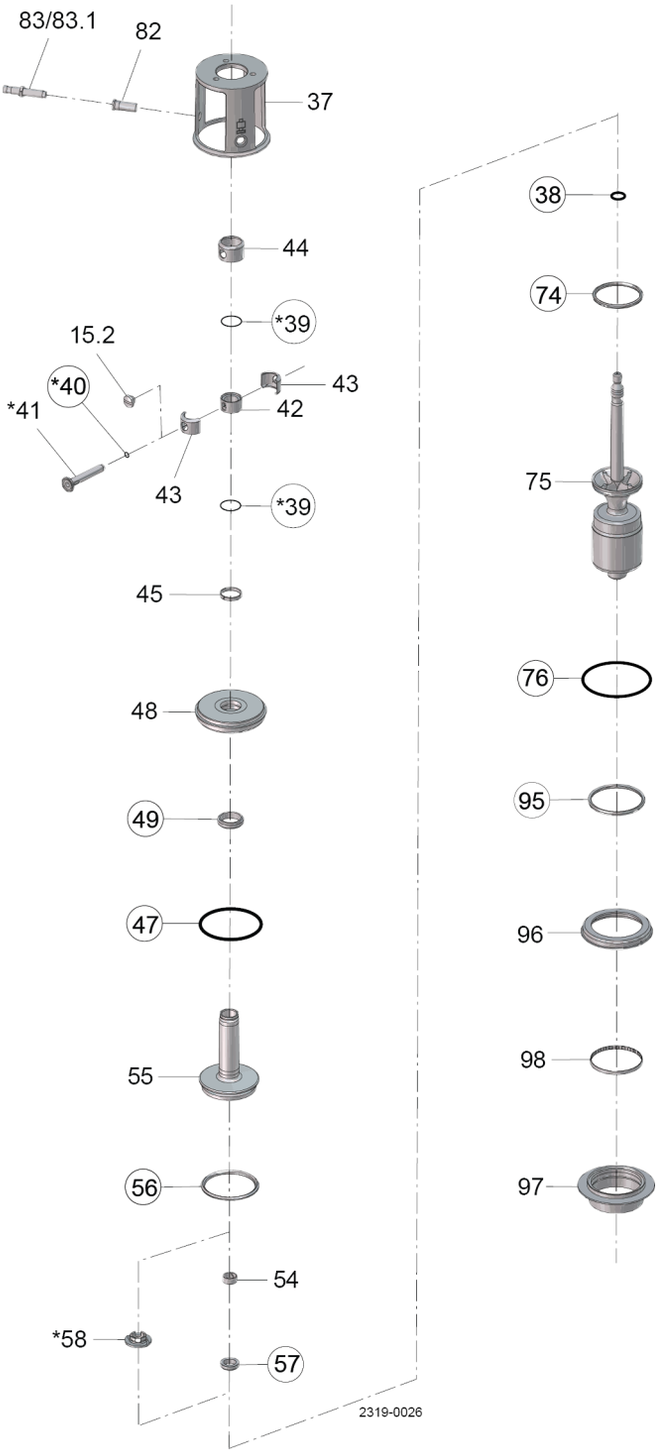

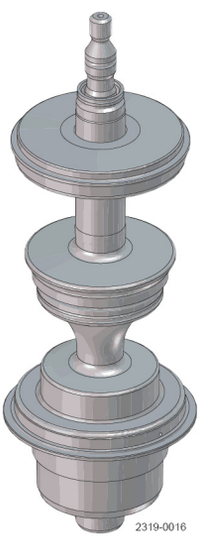

◯ = wear parts

✶ = with SpiralClean in leakage chamber

Pos		Qty	Denomination	2”	2½”	3”	4”
Lower plug							
38	♦	1	O-ring, EPDM	9611993555	9611993572	9611993572	9611993572
		1	O-ring set, (10 pcs.) EPDM	8010023163	8010023164	8010023164	8010023164
74	♦	1	Seal ring, EPDM	9613095206	9613095209	9613095209	9613095219
	♦	1	Seal ring, NBR	9613095214	9613095215	9613095215	9613095220
	♦	1	Seal ring, FPM, Alfa Laval recommends EPDM	9613095205	9613095208	9613095208	9613095218
	♦	1	Seal ring, HNBR	9613095204	9613095207	9613095207	9613095217
		1	Seal ring set, (10 pcs.) EPDM	8010023169	8010023170	8010023170	8010023171
75		1	Lower plug	9614204821	9614201621	9614201633	9614217801
Lower sealing element							
76	♦	1	O-ring, EPDM	9611993632	9611993636	9611993636	9611993640
	♦	1	O-ring, NBR	9611993633	9611993637	9611993637	9611993641
	♦	1	O-ring, FPM	9611993634	9611993638	9611993638	9611993642
	♦	1	O-ring, HNBR	9611993635	9611993639	9611993639	9611993643
95	♦	1	Special lip seal, EPDM	9613464215	9613464203	9613464203	9613464219
	♦	1	Special lip seal, NBR	9613464216	9613464204	9613464204	9613464220
	♦	1	Special lip seal, HNBR	9613464213	9613464201	9613464201	9613464217
	♦	1	Special lip seal, FPM	9613464214	9613464202	9613464202	9613464218
96		1	Lower sealing element, upper part	9613475801	9613465201	9613465201	9613476001
97		1	Lower sealing element, lower part	9613475901	9613465301	9613465301	9613476101
98		1	Guide ring, Turcite	9613466104	9613466101	9613466101	9613466105
Extra parts if clamped valve body							
52		1	O-ring, EPDM	9611993632	9611993636	9611993636	9611993640
		1	O-ring, NBR	9611993633	9611993637	9611993637	9611993641
		1	O-ring, FPM	9611993634	9611993638	9611993638	9611993642
		1	O-ring, HNBR	9611993635	9611993639	9611993639	9611993643

NOTE!
If clamped valve body an extra O-ring (pos. 52) is required.
If SpiralClean in leakage chamber, extra O-rings (2x pos. 39 and 1x pos. 40) is required.
Spare parts for mix size please refer to configurator in Alfa Laval Anytime

NOTE!
All FPM service kits are supplied with EPDM seal ring, pos. 74.

Service kits

		2” Seat ø53.3	2½” Seat ø81.3	3” Seat ø81.3	4” Seat ø100.3
♦	**Service kit, EPDM**	**9611928257**	**9611928261**	**9611928261**	**9611928265**
♦	**Service kit, NBR**	**9611928258**	**9611928262**	**9611928262**	**9611928266**
♦	**Service kit, FPM**	**9611928259**	**9611928263**	**9611928263**	**9611928267**
♦	**Service kit, HNBR**	**9611928260**	**9611928264**	**9611928264**	**9611928268**

For mixed size housings, the service kit is determined by the smallest size connection on the valve.

NOTE!
All FPM service kits are supplied with EPDM seal ring, pos. 74.

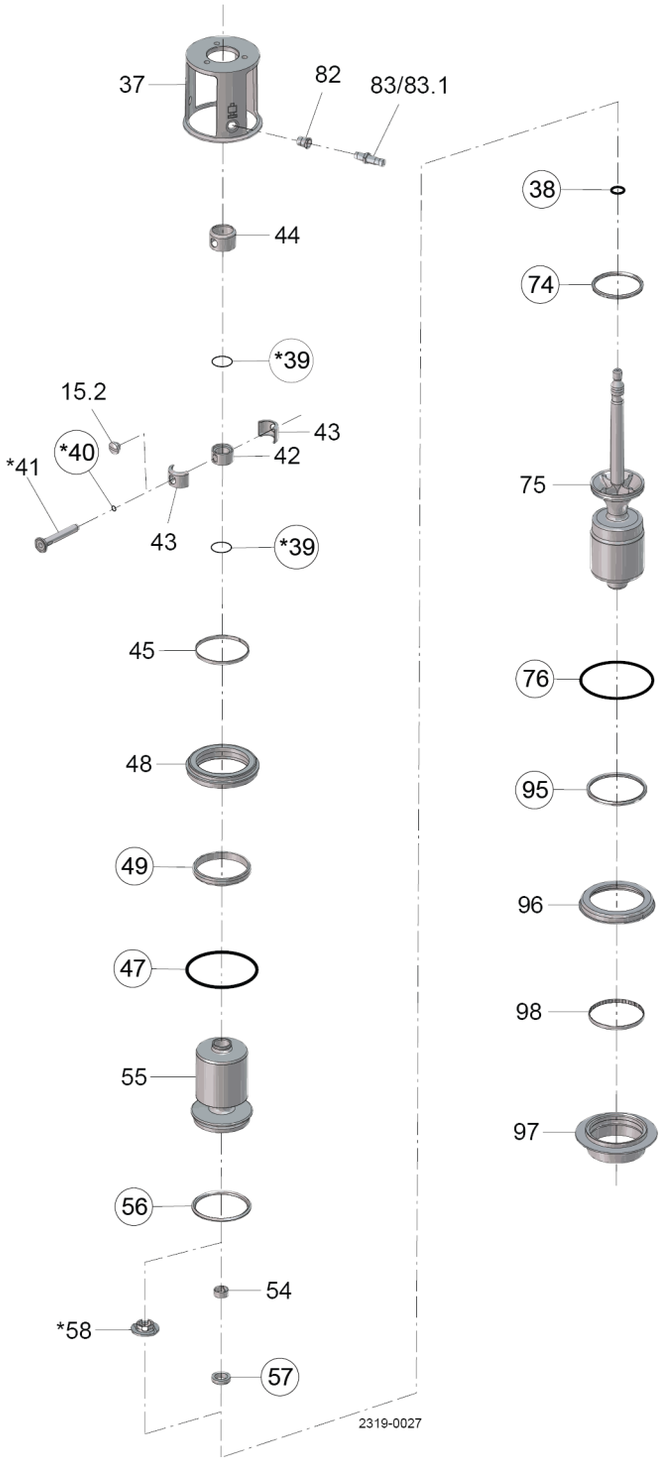

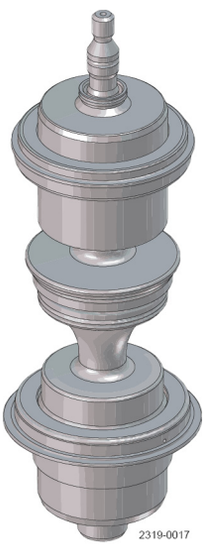

◯ = wear parts

✶ = with SpiralClean in leakage chamber

Pos		Qty	Denomination	1½"	2"	2½"	3"	4"
Intermediate parts								
37		1	Intermediate piece	9614255501	9614255901	9614256301	9614256303	9614256701
82	Δ	1	Bolt for indication	9614257508	9614257508	9614257508	9614257508	9614257508
83	Δ	1	Sensor for indication	9611995770	9611995770	9611995770	9611995770	9611995770
83.1		1	Cable for sensor for indication	9611994915	9611994915	9611994915	9611994915	9611994915
Spindle liner								
15.2		1	Plug	9615331901	9615331901	9615331901	9615331901	9615331901
42		1	Spindle liner	9614221101	9614221101	9614205301	9614205301	9614205301
43		2	Clamp	9613011801	9613011801	9613009201	9613009201	9613009201
44		1	Lock	9613011701	9613011701	9613009101	9613009101	9613009101
Extra parts if SpiralClean in leakage chamber								
39		2	O-ring, EPDM	9611993492	9611993492	9611993493	9611993493	9611993493
40		1	O-ring, EPDM	9611995521	9611995521	9611995521	9611995521	9611995521
41		1	Flushing tube	9613205401	9613205401	9614205402	9614205402	9614205403
58		1	Spray nozzle, PVDF	9613221301	9613221301	9614221201	9614221201	9614221201
Upper sealing element								
45		1	Guide ring, PTFE	9613008412	9613008413	9613008414	9613008414	9613008420
47	♦	1	O-ring, EPDM	9611993628	9611993632	9611993636	9611993636	9611993640
	♦	1	O-ring, NBR	9611993629	9611993633	9611993637	9611993637	9611993641
	♦	1	O-ring, FPM	9611993630	9611993634	9611993638	9611993638	9611993642
	♦	1	O-ring, HNBR	9611993631	9611993635	9611993639	9611993639	9611993643
48		1	Upper sealing element, (blasted/Ra1.6)	9613015701	9613014202	9613006402	9613006402	9613066001
		1	Upper sealing element, (polished/Ra0.8	9613015702	9613014204	9613006404	9613006404	9613066002
49	♦	1	Lip seal, EPDM	9613008516	9613008521	9613008526	9613008526	9613008548
	♦	1	Lip seal, NBR	9613008517	9613008522	9613008527	9613008527	9613008549
	♦	1	Lip seal, FPM	9613008518	9613008523	9613008528	9613008528	9613008550
	♦	1	Lip seal, HNBR	9613008519	9613008524	9613008529	9613008529	9613008551
Upper plug								
54		1	Guide ring, PTFE	9613008401	9613008401	9613008402	9613008402	9613008402
55		1	Upper plug	9614232501	9614233109	9614234007	9614234007	9614234505
56	♦	1	Seal ring, EPDM	9613095106	9613095106	9613095109	9613095109	9613095119
	♦	1	Seal ring, NBR	9613095114	9613095114	9613095115	9613095115	9613095120
	♦	1	Seal ring, FPM	9613095105	9613095105	9613095108	9613095108	9613095118
	♦	1	Seal ring, HNBR	9613095104	9613095104	9613095107	9613095107	9613095117
		1	Seal ring set, (10 pcs.) EPDM	8010023165	8010023165	8010023166	8010023166	8010023167
57	♦	1	Lip seal, EPDM	9613008706	9613008706	9613008711	9613008711	9613008711
	♦	1	Lip seal, NBR	9613008707	9613008707	9613008712	9613008712	9613008712
	♦	1	Lip seal, FPM	9613008708	9613008708	9613008713	9613008713	9613008713
	♦	1	Lip seal, HNBR	9613008709	9613008709	9613008714	9613008714	9613008714

1.7

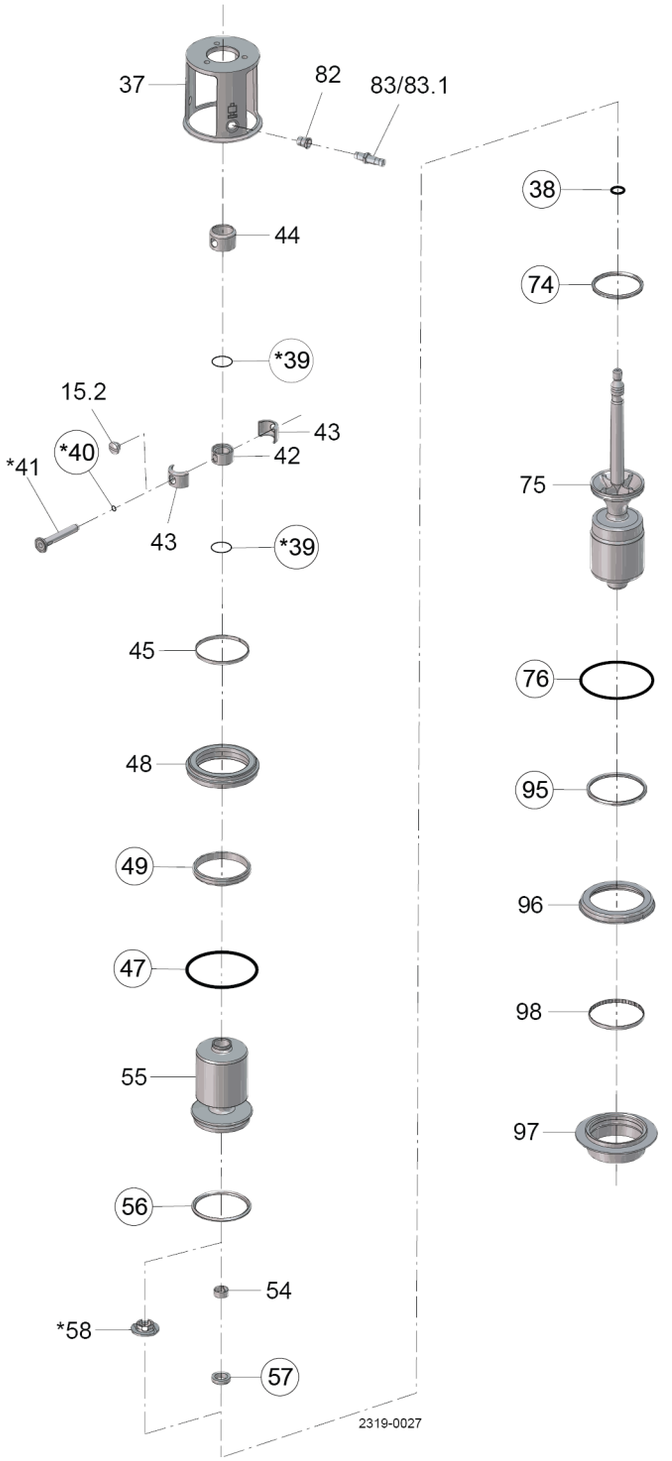

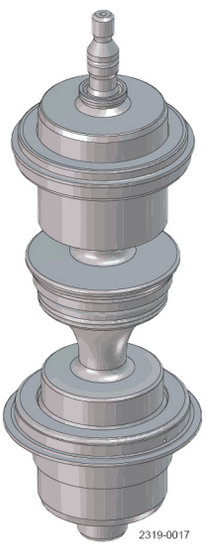

◯ = wear parts

✶ = with SpiralClean in leakage chamber

Pos		Qty	Denomination	1½"	2"	2½"	3"	4"
Lower plug								
38	♦	1	O-ring, EPDM	9611993555	9611993555	9611993572	9611993572	9611993572
		1	O-ring set, (10 pcs.) EPDM	8010023163	8010023163	8010023164	8010023164	8010023164
74	♦	1	Seal ring, EPDM	9613095206	9613095206	9613095209	9613095209	9613095219
	♦	1	Seal ring, NBR	9613095214	9613095214	9613095215	9613095215	9613095220
	♦	1	Seal ring, FPM - Alfa Laval recommends EPDM	9613095205	9613095205	9613095208	9613095208	9613095218
	♦	1	Seal ring, HNBR	9613095204	9613095204	9613095207	9613095207	9613095217
		1	Seal ring set, (10 pcs.) EPDM	8010023169	8010023169	8010023170	8010023170	8010023171
75		1	Lower plug	9614202965	9614204821	9614201621	9614201633	9614217801
Lower sealing element								
76	♦	1	O-ring, EPDM	9611993628	9611993632	9611993636	9611993636	9611993640
	♦	1	O-ring, NBR	9611993629	9611993633	9611993637	9611993637	9611993641
	♦	1	O-ring, FPM	9611993630	9611993634	9611993638	9611993638	9611993642
	♦	1	O-ring, HNBR	9611993631	9611993635	9611993639	9611993639	9611993643
95	♦	1	Special lip seal, EPDM	9613464259	9613464215	9613464203	9613464203	9613464219
	♦	1	Special lip seal, NBR	9613464260	9613464216	9613464204	9613464204	9613464220
	♦	1	Special lip seal, HNBR	9613464257	9613464213	9613464201	9613464201	9613464217
	♦	1	Special lip seal, FPM	9613464258	9613464214	9613464202	9613464202	9613464218
96		1	Lower sealing element, upper part	9614257701	9613475801	9613465201	9613465201	9613476001
97		1	Lower sealing element, lower part	9614257801	9613475901	9613465301	9613465301	9613476101
98		1	Guide ring, Turcite	9613466111	9613466104	9613466101	9613466101	9613466105
Extra parts if clamped valve body								
52		1	O-ring, EPDM	9611993628	9611993632	9611993636	9611993636	9611993640
		1	O-ring, NBR	9611993629	9611993633	9611993637	9611993637	9611993641
		1	O-ring, FPM	9611993630	9611993634	9611993638	9611993638	9611993642
		1	O-ring, HNBR	9611993631	9611993635	9611993639	9611993639	9611993643

NOTE!
If clamped valve body an extra O-ring (pos. 52) is required.
If SpiralClean in leakage chamber, extra O-rings (2x pos. 39 and 1x pos. 40) is required.
Δ Sensor service kit for valves delivered prior to October 2015 - 9611928351
Spare parts for mix size please refer to configurator in Alfa Laval Anytime

NOTE!
All FPM service kits are supplied with EPDM seal ring, pos. 74.

Service kits

		1½" Seat ø53.3	2" Seat ø53.3	2½" Seat ø81.3	3" Seat ø81.3	4" Seat ø100.3
♦	**Service kit, EPDM**	**9611928273**	**9611928277**	**9611928281**	**9611928281**	**9611928285**
♦	**Service kit, NBR**	**9611928274**	**9611928278**	**9611928282**	**9611928282**	**9611928286**
♦	**Service kit, FPM**	**9611928275**	**9611928279**	**9611928283**	**9611928283**	**9611928287**
♦	**Service kit, HNBR**	**9611928276**	**9611928280**	**9611928284**	**9611928284**	**9611928288**

For mixed size housings, the service kit is determined by the smallest size connection on the valve.

NOTE!
All FPM service kits are supplied with EPDM seal ring, pos. 74.

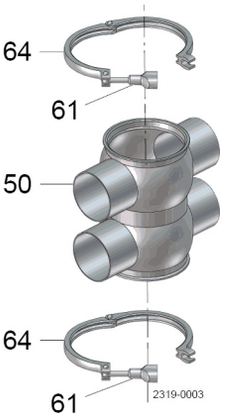

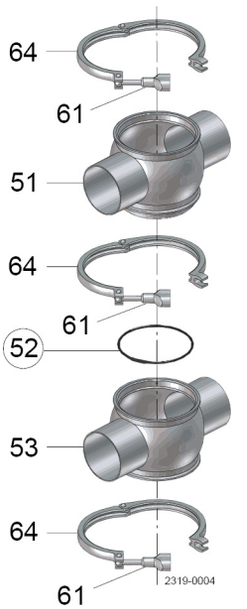

Body combination - welded bodies

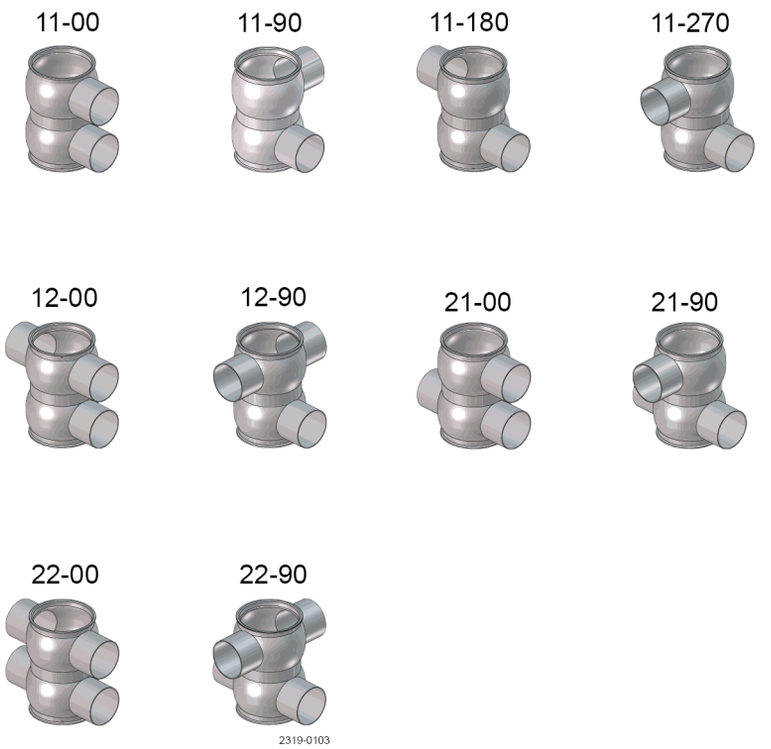

Pos	Qty	Denomination	1½"	2"	2½"	3"	4"
61	2	Wingnut	9612558001	9612558001	9612558001	9612558001	9612558001
64	2	Clamp without nut	9613021401	9613021501	9613021601	9613021601	9613021701
External blasted / internal polished							
50	1	Valve body, 11-00	9615423401	9615423501	9615423601	9615423701	9615423801
	1	Valve body, 12-00	9615423405	9615423505	9615423605	9615423705	9615423805
	1	Valve body, 21-00	9615423407	9615423507	9615423607	9615423707	9615423807
	1	Valve body, 22-00	9615423409	9615423509	9615423609	9615423709	9615423809
	1	Valve body, 11-90	9615423402	9615423502	9615423602	9615423702	9615423802
	1	Valve body, 12-90	9615423406	9615423506	9615423606	9615423706	9615423806
	1	Valve body, 21-90	9615423408	9615423508	9615423608	9615423708	9615423808
	1	Valve body, 22-90	9615423410	9615423510	9615423610	9615423710	9615423810
	1	Valve body, 11-180	9615423403	9615423503	9615423603	9615423703	9615423803
	1	Valve body, 11-270	9615423404	9615423504	9615423604	9615423704	9615423804
External and internal polished							
	1	Valve body, 11-00	9615423421	9615423521	9615423621	9615423721	9615423821
	1	Valve body, 12-00	9615423425	9615423525	9615423625	9615423725	9615423825
	1	Valve body, 21-00	9615423427	9615423527	9615423627	9615423727	9615423827
	1	Valve body, 22-00	9615423429	9615423529	9615423629	9615423729	9615423829
	1	Valve body, 11-90	9615423422	9615423522	9615423622	9615423722	9615423822
	1	Valve body, 12-90	9615423426	9615423526	9615423626	9615423726	9615423826
	1	Valve body, 21-90	9615423428	9615423528	9615423628	9615423728	9615423828
	1	Valve body, 22-90	9615423430	9615423530	9615423630	9615423730	9615423830
	1	Valve body, 11-180	9615423423	9615423523	9615423623	9615423723	9615423823
	1	Valve body, 11-270	9615423424	9615423524	9615423624	9615423724	9615423824

Clamped valve body

Pos	Qty	Denomination	1½"	2"	2½"	3"	4"
External blasted / internal polished							
51	1	Valve body, upper, 1 port	9613058015	9613058017	9613058019	9613058021	9613058039
	1	Valve body, upper, 2 ports	9613058016	9613058018	9613058020	9613058022	9613058040
53	1	Valve body, lower, 1 port	9613058315	9613058317	9613058319	9613058321	9613058323
	1	Valve body, lower, 2 ports	9613058316	9613058318	9613058320	9613058322	9613058324
External and internal polished							
51	1	Valve body, upper, 1 port	9613058027	9613058029	9613058031	9613058033	9613058041
	1	Valve body, upper, 2 ports	9613058028	9613058030	9613058032	9613058034	9613058042
53	1	Valve body, lower, 1 port	9613058327	9613058329	9613058331	9613058333	9613058335
	1	Valve body, lower, 2 ports	9613058328	9613058330	9613058332	9613058334	9613058336
Extra parts if clamped valve body							
52	1	O-ring, EPDM	9611993628	9611993632	9611993636	9611993636	9611993640
	1	O-ring, NBR	9611993629	9611993633	9611993637	9611993637	9611993641
	1	O-ring, FPM	9611993630	9611993634	9611993638	9611993638	9611993642
	1	O-ring, HNBR	9611993631	9611993635	9611993639	9611993639	9611993643

NOTE!

If different connection size on upper and lower body, except for size 6", it is always the smallest body that determines the service kit.

If clamped valve body an extra O-ring (pos. 52) is required.

1.7

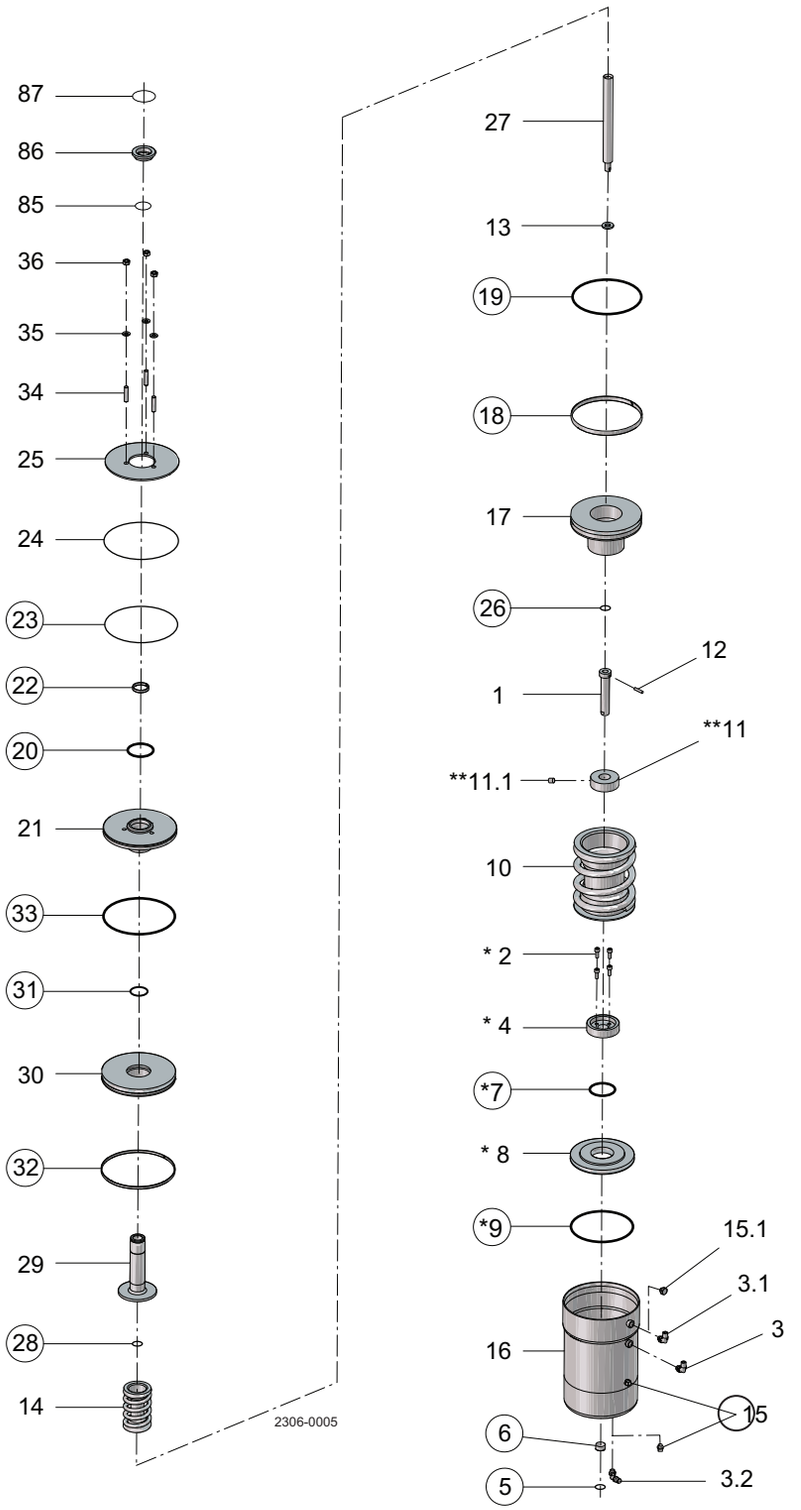

= actuator kit

✶ = Not used in actuator 1½"-2"

✶✶ = Not used in actuator 2½", 3", 4" and 6",

Pos		Qty	Denomination	DN/OD 51 DN 50	DN/OD 63.5 DN 65 DN/OD 76.1 DN 80	LongStroke DN/OD 63.5 DN 65 DN/OD 76.1 DN 80	DN/OD 101.6 DN 100	DN 125 DN 150
1		1	Upper stem	9613010102	9613007401	9613007402	9613007402	9613007402
2		4	Screw		9611993342	9611993342	9611993342	9611993342
3		1	Air fitting	9611991988	9611991988	9611991988	9611991988	9611991988
3.1		1	Air fitting	9611991988	9611991988	9611991988	9611991988	9611991988
3.2		1	Air fitting	9611991988	9611991988	9611991988	9611991988	9611991988
4		1	Stop for upper piston		9613005301	9613005302	9613005302	9613005302
5	□	1	O-ring, NBR	9611993499	9611993499	9611993499	9611993499	9611993499
6	□	1	Guide ring, Turcite	9613008408	9613008408	9613008408	9613008408	9613008408
7	□	1	O-ring, NBR	9611993514	9611993514	9611993514	9611993514	
8		1	Upper piston		9613005601	9613005602	9613005602	9613005602
9	□	1	O-ring, NBR		9611993512	9611993513	9611993513	9611993513
10		1	Spring assembly	9613012501	9613007502	9613025604	9613025604	9613025604
11		1	Distance spacer	9613010202				
11.1		1	Screw	9611991763				
12		1	Pin	9611994197	9611994198	9611994199	9611994199	9611994199
13		1	Washer	9611993594	9611993595	9611993596	9611993596	9611993596
14		1	Spring assembly	9613013101	9613009502	9613009502	9613009502	9613009502
15		1	Plug	9613414101	9613414101	9613414101	9613414101	9613414101
15.1		1	Plug	9611993709	9611993709	9611993709	9611993709	9611993709
17		1	Main piston	9613013201	9613005701	9613015901	9613015901	9613015901
18	□	1	Guide ring, Turcite	9613008409	9613008410	9613008411	9613008411	9613008411
19	□	1	O-ring, NBR	9611993505	9611993507	9611993509	9611993509	9611993509
20	□	1	O-ring, NBR	9611993503	9611993607	9611993607	9611993607	9611993607
21		1	Bottom	9613014001	9613005401	9613016801	9613016801	9613016801
22	□	1	Guide ring, Turcite	9613008403	9613008404	9613008404	9613008404	9613008404
23	□	1	O-ring, NBR	9611992228	9611991489	22340675	22340675	22340675
24		1	Retaining ring	9613024802	9613024803	9613024804	9613024804	9613024804
25		1	Cover disk	9613005802	9613005803	9613005804	9613005804	9613005804
26		1	O-ring, NBR	9611993528	9611993495	9611993530	9611993530	9611993530
27		1	Inner stem	9613010602	9613007301	9613007302	9613007302	9613007302
28	□	1	O-ring	9611993495	9611990030	9611990030	9611990030	9611990030
29		1	Piston rod	9613013401	9613006001	9613006002	9613006002	9613006002
30		1	Lower piston	9613013801	9613005501	9613016601	9613016601	9613016601
31	□	1	O-ring, NBR	42153	42153	42153	42153	42153
32	□	1	Guide ring, Turcite	9613008405	9613008406	9613008407	9613008407	9613008407
33	□	1	O-ring, NBR	22341275	9611993508	9611993510	9611993510	9611993510
34		3	Bolt	9611993618	9611993618	9611993618	9611993618	9611993618
35		3	Washer	9611993594	9611993594	9611993594	9611993594	9611993594
36		3	Nut	9611990360	9611990360	9611990360	9611990360	9611990360
85		1	O-ring, NBR	9611994680	9611990092	9611990092	9611990092	9611990092
86		1	Prop	9613099001	9613099002	9613099002	9613099002	9613099002
87		1	O-ring, NBR	9611994599	9611994599	9611994599	9611994599	9611994599

		DN/OD 51 DN 50	DN/OD 63.5 DN 65 DN/OD 76.1 DN 80	LongStroke DN/OD 63.5 DN 65 DN/OD 76.1 DN 80	DN/OD 101.6 DN 100	DN 125 DN 150
□	**Service kits, actuator**	**9611926414**	**9611926415**	**9611926416**	**9611926416**	**9611926416**

Parts marked with □ are included in the service kits.

1.7

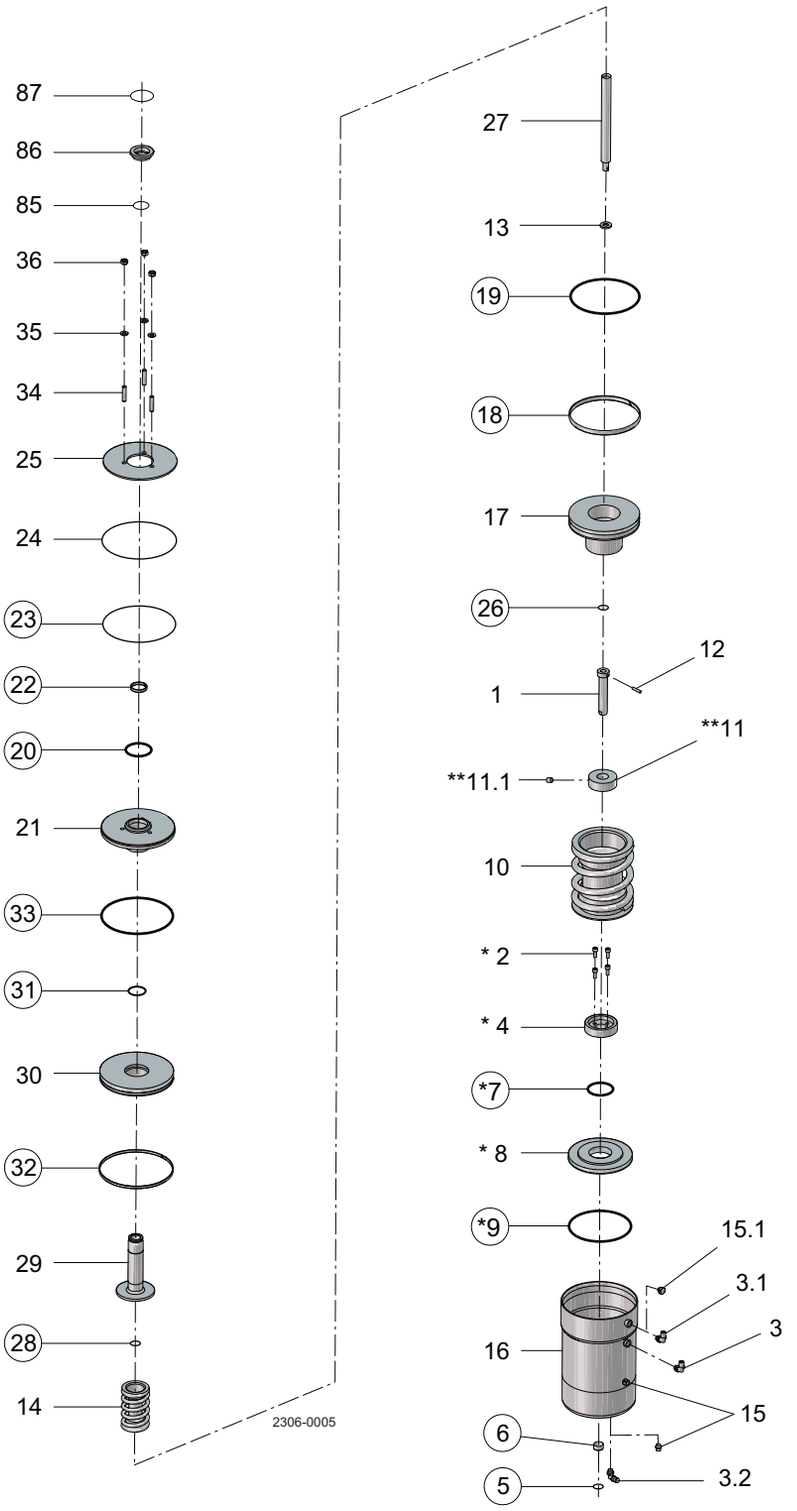

◯ = Actuator kit

★ = Not used in actuator 2”

★★ = Not used in actuator 2½”, 3”, 4”

Pos		Qty	Denomination	2”	2½” & 3”	Long stroke 2½” & 3”	4”
1		1	Upper stem	9613010102	9613007401	9613007402	9613007402
2		4	Screw		9611993342	9611993342	9611993342
3		1	Kit, air fitting and label, (blue, ThinkTop)	9611926026	9611926026	9611926026	9611926026
		1	Kit, air fitting and label, (white, Thinktop V-Series)	8010000754	8010000754	8010000754	8010000754
3.1		1	Kit, air fitting and label, (red, ThinkTop)	9611926028	9611926028	9611926028	9611926028
		1	Kit, air fitting and label, (blue, ThinkTop V-Series)	9611926026	9611926026	9611926026	9611926026
3.2		1	Kit, air fitting and label, (yellow)	9611926027	9611926027	9611926027	9611926027
4		1	Stop for upper piston		9613005301	9613005302	9613005302
5	•	1	O-ring, NBR	9611993499	9611993499	9611993499	9611993499
6	•	1	Guide ring, Turcite	9613008408	9613008408	9613008408	9613008408
7	•	1	O-ring, NBR		9611993514	9611993514	9611993514
8		1	Upper piston		9613005601	9613005602	9613005602
9	•	1	O-ring, NBR	9611993512	9611993513	9611993513	
10		1	Spring assembly	9613012501	9613007502	9613025604	9613025604
11		1	Distance spacer	9613010202			
11.1		1	Screw	9611991763			
12		1	Pin	9611994197	9611994198	9611994199	9611994199
13		1	Washer	9611993594	9611993595	9611993596	9611993596
14		1	Spring assembly	9613013101	9613009502	9613009502	9613009502
15		1	Plug	9613414101	9613414101	9613414101	9613414101
15.1		1	Plug	9611993709	9611993709	9611993709	9611993709
17		1	Main piston	9613013201	9613005701	9613015901	9613015901
18	•	1	Guide ring, Turcite	9613008409	9613008410	9613008411	9613008411
19	•	1	O-ring, NBR	9611993505	9611993507	9611993509	9611993509
20	•	1	O-ring, NBR	9611993503	9611993607	9611993607	9611993607
21		1	Bottom	9613014001	9613005401	9613016801	9613016801
22	•	1	Guide ring, Turcite	9613008403	9613008404	9613008404	9613008404
23	•	1	O-ring, NBR	9611992228	9611991489	22340675	22340675
24		1	Retaining ring	9613024802	9613024803	9613024804	9613024804
25		1	Cover disk	9613005802	9613005803	9613005804	9613005804
26		1	O-ring, NBR	9611993528	9611993495	9611993530	9611993530
27		1	Inner stem	9613010602	9613007301	9613007302	9613007302
28	•	1	O-ring	9611993495	9611990030	9611990030	9611990030
29		1	Piston rod	9613013401	9613006001	9613006002	9613006002
30		1	Lower piston	9613013801	9613005501	9613016601	9613016601
31	•	1	O-ring, NBR	42153	42153	42153	42153
32	•	1	Guide ring, Turcite	9613008405	9613008406	9613008407	9613008407
33	•	1	O-ring, NBR	22341275	9611993508	9611993510	9611993510
34		3	Bolt	9611993618	9611993618	9611993618	9611993618
35		3	Washer	9611993594	9611993594	9611993594	9611993594
36		3	Nut	9611990360	9611990360	9611990360	9611990360
85		1	O-ring, NBR	9611994680	9611990092	9611990092	9611990092
86		1	Prop	9613099001	9613099002	9613099002	9613099002
87		1	O-ring, NBR	9611994599	9611994599	9611994599	9611994599

		2”	2½” & 3”	Long stroke 2½” & 3”	4”
•	**Actuator service kit**	**9611926414**	**9611926415**	**9611926416**	**9611926416**

Parts marked with • are included in the service kits.

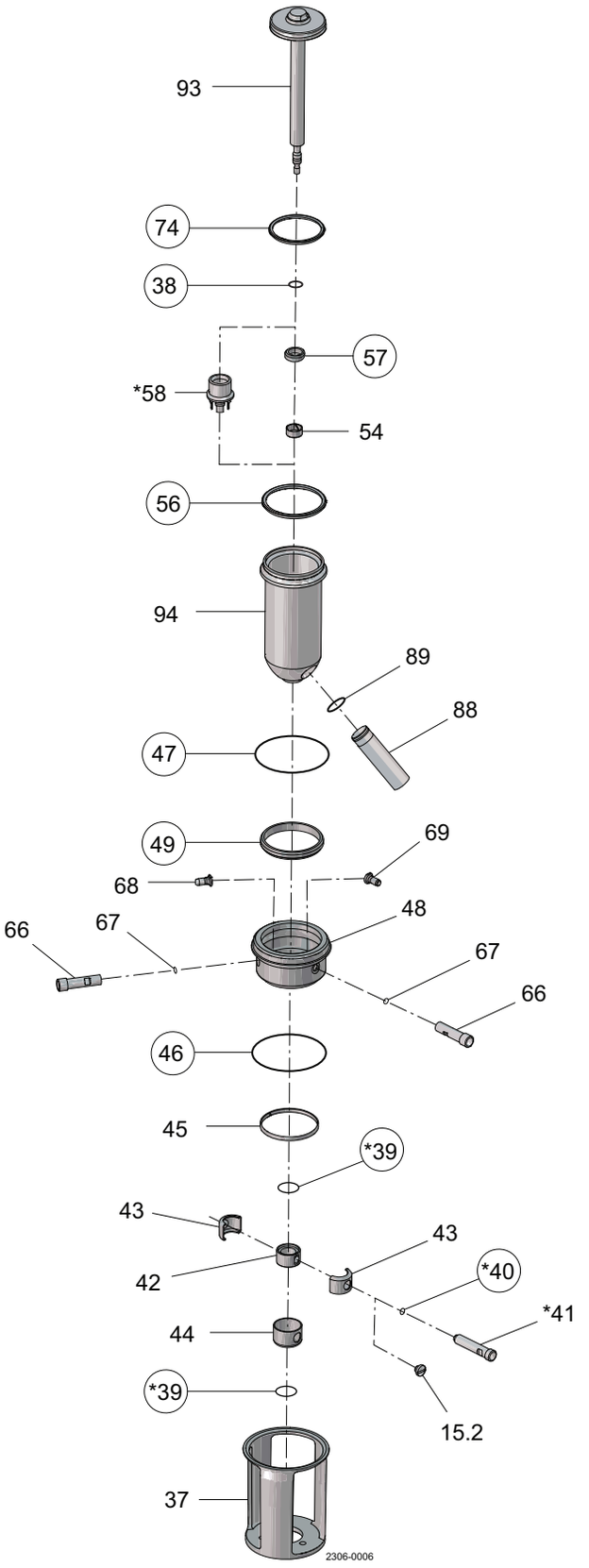

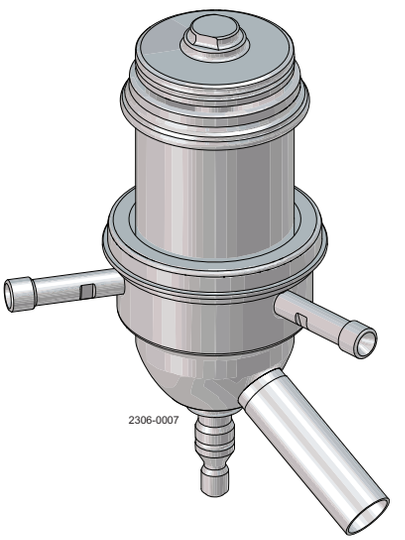

○ = wear parts

* = with SpiralClean in leakage chamber

Pos		Qty	Denomination	DN/OD 51 DN50 Seat ø53.3	DN/OD 63.5 DN/OD 76.1 DN65/DN80 Seat ø81.3	LongStroke DN/OD 63.5 DN/OD 76.1 DN65/DN80 Seat ø81.3	DN/OD 101.6 DN 100 Seat ø100.3	DN 125 Seat ø115.3
Spindle liner								
15		1	Plug	9613414101	9613414101	9613414101	9613414101	9613414101
42		1	Spindle liner	9613011601	9613009001	9613009001	9613009001	9613009001
43		2	Clamp	9613011801	9613009201	9613009201	9613009201	9613009201
44		1	Lock	9613011701	9613009101	9613009101	9613009101	9613009101
Extra parts if SpiralClean in vent cavity								
39		2	O-ring, EPDM	9611993492	9611993493	9611993493	9611993493	9611993493
40		1	O-ring, EPDM	9611993119	9611993119	9611993119	9611993119	9611993119
41		1	Flushing tube	3135710172	3135710172	3135710172	3135710172	3135710172
58		1	Spray nozzle, PVDF	9613098801	9613098901	9613098901	9613098901	9613098901
Sealing element								
45		1	Guide ring	9613008413	9613008414	9613008414	9613008420	9613008415
46	•	1	O-ring, EPDM	9611993650	9611993651	9611993651	9611994407	9611993652
47	•	1	O-ring, EPDM	9611993632	9611993636	9611993636	9611993640	9611993644
	•	1	O-ring, NBR	9611993633	9611993637	9611993637	9611993641	9611993645
	•	1	O-ring, FPM	9611993634	9611993638	9611993638	9611993642	9611993646
	•	1	O-ring, HNBR	9611993635	9611993639	9611993639	9611993643	9611993647
48		1	Sealing element	9613049101	9613049201	9613049201	9613065901	9613049401
49	•	1	Lip seal, EPDM	9613008521	9613008526	9613008526	9613008548	9613008531
	•	1	Lip seal, NBR	9613008522	9613008527	9613008527	9613008549	9613008532
	•	1	Lip seal, FPM	9613008523	9613008528	9613008528	9613008550	9613008533
	•	1	Lip seal, HNBR	9613008524	9613008529	9613008529	9613008551	9613008534
66		2	Flushing tube	9613007902	9613007903	9613007903	9613007904	9613007905
67	•	2	O-ring, EPDM	9611993119	9611993119	9611993119	9611993119	9611993119
68		1	Drain	9613008001	9613008001	9613008001	9613008001	9613008001
69		1	Nozzle	9613008002	9613008002	9613008002	9613008002	9613008002
Upper plug								
54		1	Guide ring, PTFE	9613008401	9613008402	9613008402	9613008402	9613008402
56	•	1	Seal ring, EPDM	9613095106	9613095109	9613095109	9613095119	9613095112
	•	1	Seal ring, NBR	9613095114	9613095115	9613095115	9613095120	9613095116
	•	1	Seal ring , FPM	9613095105	9613095108	9613095108	9613095118	9613095111
	•	1	Seal ring, HNBR	9613095104	9613095107	9613095107	9613095117	9613095110
57	•	1	Lip seal, EPDM	9613008706	9613008711	9613008711	9613008711	9613008711
	•	1	Lip seal, NBR	9613008707	9613008712	9613008712	9613008712	9613008712
	•	1	Lip seal, FPM	9613008708	9613008713	9613008713	9613008713	9613008713
	•	1	Lip seal, HNBR	9613008709	9613008714	9613008714	9613008714	9613008714
88		1	Pipe for balance plug, *	9615248501	9615248502	9615248502	9615248502	9615248502
		1	Pipe for balance plug, **	9613098101	9613098102	9613098102	9613098102	9613098102
89	•	1	O-ring, EPDM, *	9611995937	9611995938	9611995938	9611995938	9611995938
	•	1	O-ring, EPDM, **	9611994603	9611994600	9611994600	9611994600	9611994600
94		1	Balance plug, *	9615248702	9615248802	9615248802	9615248902	9615249002
		1	Balance plug, **					
		1	Balance plug, complete (Pos. 88, 89, 94 - (Period 1702-))	8010007463	8010007465	8010007465	8010007467	8010007469
Lower plug								
38	•	1	O-ring, EPDM	9611993555	9611993572	9611993572	9611993572	9611993572
74	•	1	Seal ring, EPDM	9613095206	9613095209	9613095209	9613095219	9613095212
	•	1	Seal ring, NBR	9613095214	9613095215	9613095215	9613095220	9613095216
	•	1	Seal ring, FPM - Alfa Laval recommends EPDM	9613095205	9613095208	9613095208	9613095218	9613095211
	•	1	Seal ring, HNBR	9613095204	9613095207	9613095207	9613095217	9613095210
93		1	Tank plug	9613096702	9613096802	9613096802	9613096902	9613097002

* = (period 1702 -)

** = (period -1702) - Please buy Balance plug, complete

Pos. 37, please see section

See note below service kits.

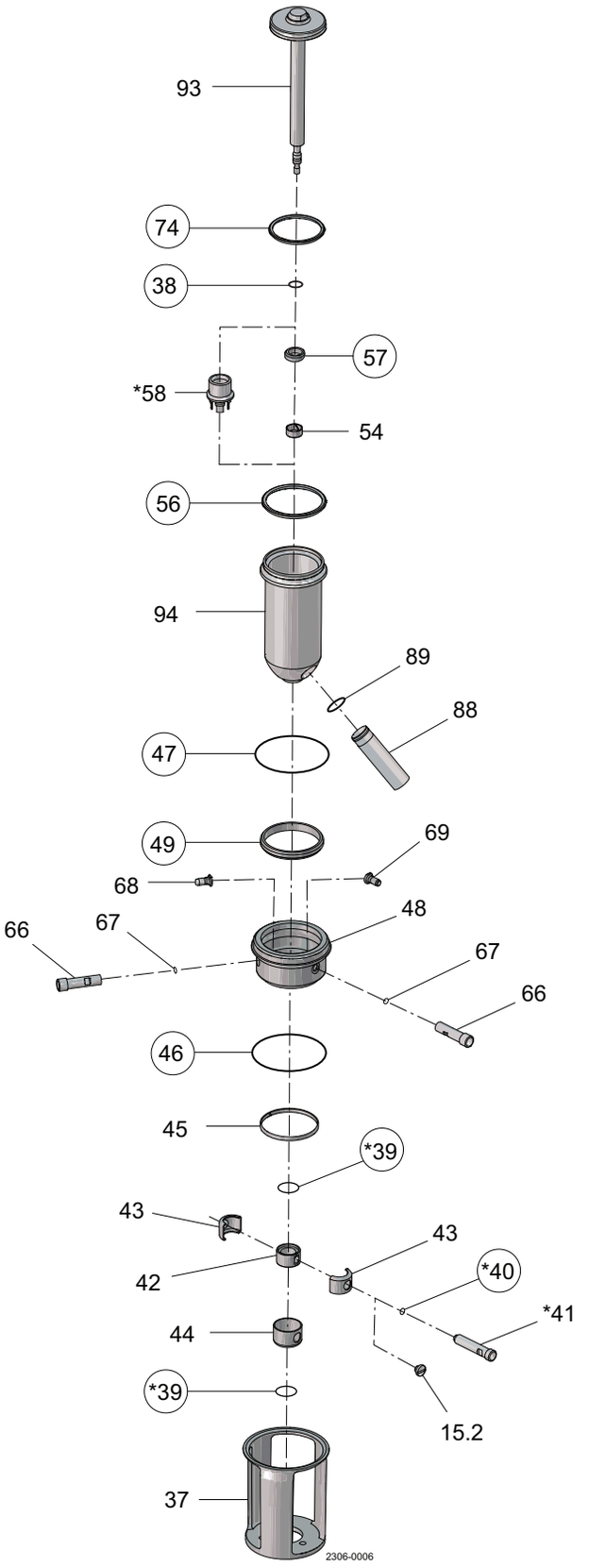

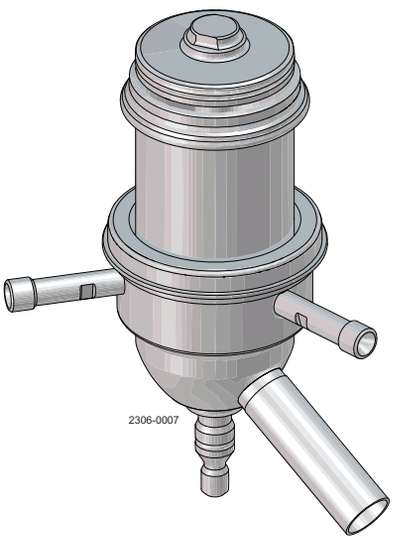

○ = wear parts

* = with SpiralClean in leakage chamber

		DN/OD 51 DN50 Seat ø53.3	DN/OD 63.5 DN/OD 76.1 DN65/DN80 Seat ø81.3	LongStroke DN/OD 63.5 DN/OD 76.1 DN65/DN80 Seat ø81.3	DN/OD 101.6 DN 100 Seat ø100.3	DN 125 Seat ø115.3
•	Service kit, EPDM	9611926449	9611926453	9611926453	9611926457	9611926461
•	Service kit, NBR	9611926450	9611926454	9611926454	9611926458	9611926462
•	Service kit, FPM	9611926451	9611926455	9611926455	9611926459	9611926463
•	Service kit, HNBR	9611926452	9611926456	9611926456	9611926460	9611926464

Parts marked with • are included in the service kits.

NOTE!
If SpiralClean in leakage chamber extra O-rings (2x pos. 39 and 1x pos. 40) is required.
All FPM service kits are supplied with EPDM seal ring, pos. 74.

900698/2

1.7

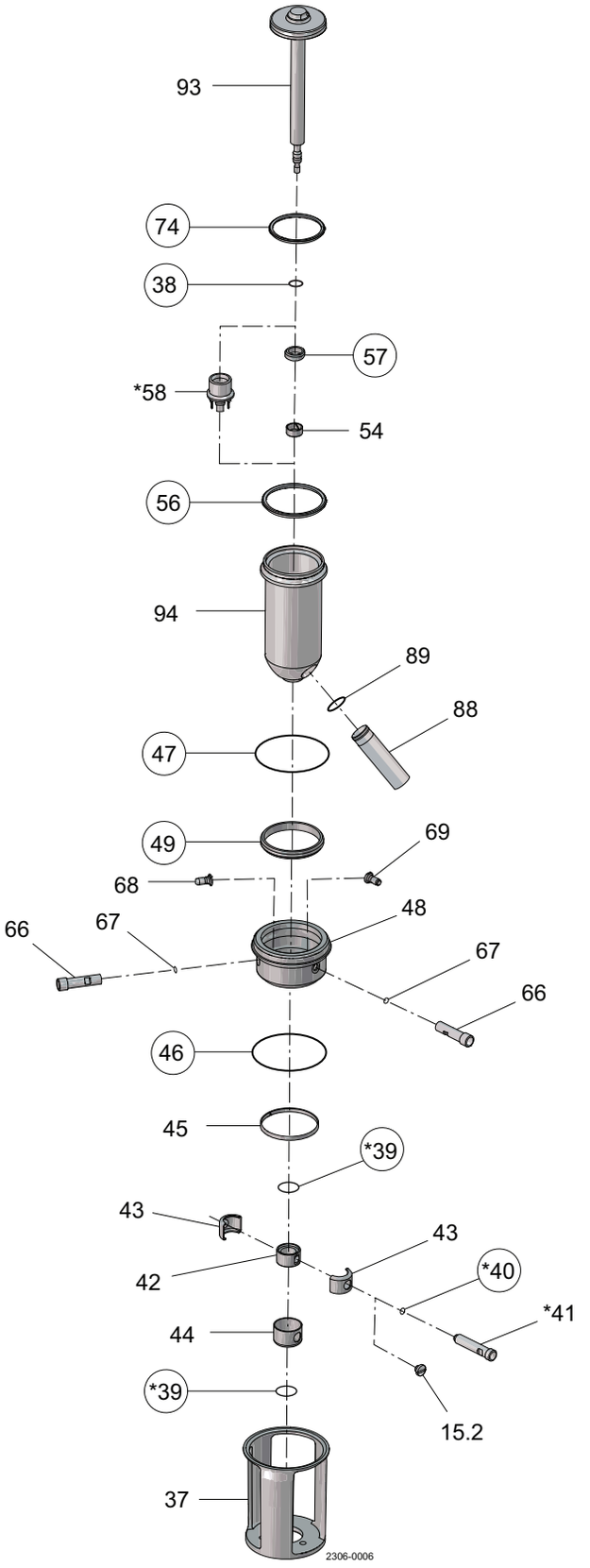

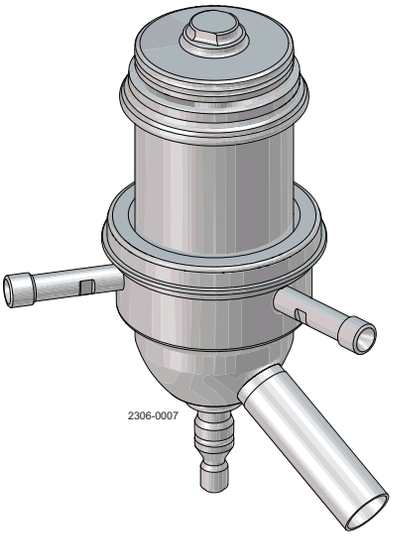

○ = wear parts

* = with SpiralClean in leakage chamber

Pos		Qty	Denomination	2” Seat ø53.3	2½” + 3” Seat ø81.3	Long stroke 2½” & 3” Seat ø81.3	4” Seat ø100.3
Spindle liner							
15		1	Plug	9613414101	9613414101	9613414101	9613414101
42		1	Spindle liner	9613011601	9613009001	9613009001	9613009001
43		2	Clamp	9613011801	9613009201	9613009201	9613009201
44		1	Lock	9613011701	9613009101	9613009101	9613009101
Extra parts if SpiralClean in vent cavity							
39		2	O-ring, EPDM	9611993492	9611993493	9611993493	9611993493
40		1	O-ring, EPDM	9611993119	9611993119	9611993119	9611993119
41		1	Flushing tube	3135710172	3135710172	3135710172	3135710172
58		1	Spray nozzle, PVDF	9613098801	9613098901	9613098901	9613098901
Sealing element							
45		1	Guide ring	9613008413	9613008414	9613008414	9613008420
46	•	1	O-ring, EPDM	9611993650	9611993651	9611993651	9611994407
47	•	1	O-ring, EPDM	9611993632	9611993636	9611993636	9611993640
	•	1	O-ring, NBR	9611993633	9611993637	9611993637	9611993641
	•	1	O-ring, FPM	9611993634	9611993638	9611993638	9611993642
	•	1	O-ring, HNBR	9611993635	9611993639	9611993639	9611993643
48		1	Sealing element, blasted	9613049101	9613049201	9613049201	9613065901
		1	Sealing element, polished	9613049102	9613049202	9613049202	9613065902
49	•	1	Lip seal, EPDM	9613008521	9613008526	9613008526	9613008548
	•	1	Lip seal, NBR	9613008522	9613008527	9613008527	9613008549
	•	1	Lip seal, FPM	9613008523	9613008528	9613008528	9613008550
	•	1	Lip seal, HNBR	9613008524	9613008529	9613008529	9613008551
66		2	Flushing tube	9613007902	9613007903	9613007903	9613007904
67	•	2	O-ring, EPDM	9611993119	9611993119	9611993119	9611993119
68		1	Drain	9613008001	9613008001	9613008001	9613008001
69		1	Nozzle	9613008002	9613008002	9613008002	9613008002
Upper plug							
54		1	Guide ring, PTFE	9613008401	9613008402	9613008402	9613008402
56	•	1	Seal ring, EPDM	9613095106	9613095109	9613095109	9613095119
	•	1	Seal ring, NBR	9613095114	9613095115	9613095115	9613095120
		1	Seal ring, FPM	9613095105	9613095108	9613095108	9613095118
		1	Seal ring, HNBR	9613095104	9613095107	9613095107	9613095117
57		1	Lip seal, EPDM	9613008706	9613008711	9613008711	9613008711
		1	Lip seal, NBR	9613008707	9613008712	9613008712	9613008712
	•	1	Lip seal, FPM	9613008708	9613008713	9613008713	9613008713
	•	1	Lip seal, HNBR	9613008709	9613008714	9613008714	9613008714
88		1	Pipe for balance plug, *	9615248501	9615248502	9615248502	9615248502
		1	Pipe for balance plug, **	9613098101	9613098102	9613098102	9613098102
89	•	1	O-ring, EPDM, *	9611995937	9611995938	9611995938	9611995938
	•	1	O-ring, EPDM, **	9611994603	9611994600	9611994600	9611994600
94		1	Balance plug, *	9615248702	9615248802	9615248802	9615248902
		1	Balance plug, **				
		1	Balance plug, complete (Pos. 88, 89, 94 - (Period 1702-))	8010007463	8010007465	8010007465	8010007467
Lower plug							
38	•	1	O-ring, EPDM	9611993555	9611993572	9611993572	9611993572
74	•	1	Seal ring, EPDM	9613095206	9613095209	9613095209	9613095219
	•	1	Seal ring, NBR	9613095214	9613095215	9613095215	9613095220
	•	1	Seal ring, FPM, Alfa Laval recommends EPDM	9613095205	9613095208	9613095208	9613095218
	•	1	Seal ring, HNBR	9613095204	9613095207	9613095207	9613095217
93		1	Tank plug	9613096702	9613096802	9613096802	9613096902

* = (period 1702 -).

** = (period -1702) - Please buy Balance plug, complete.

Pos. 37, please see section .

See note below service kits.

1.7

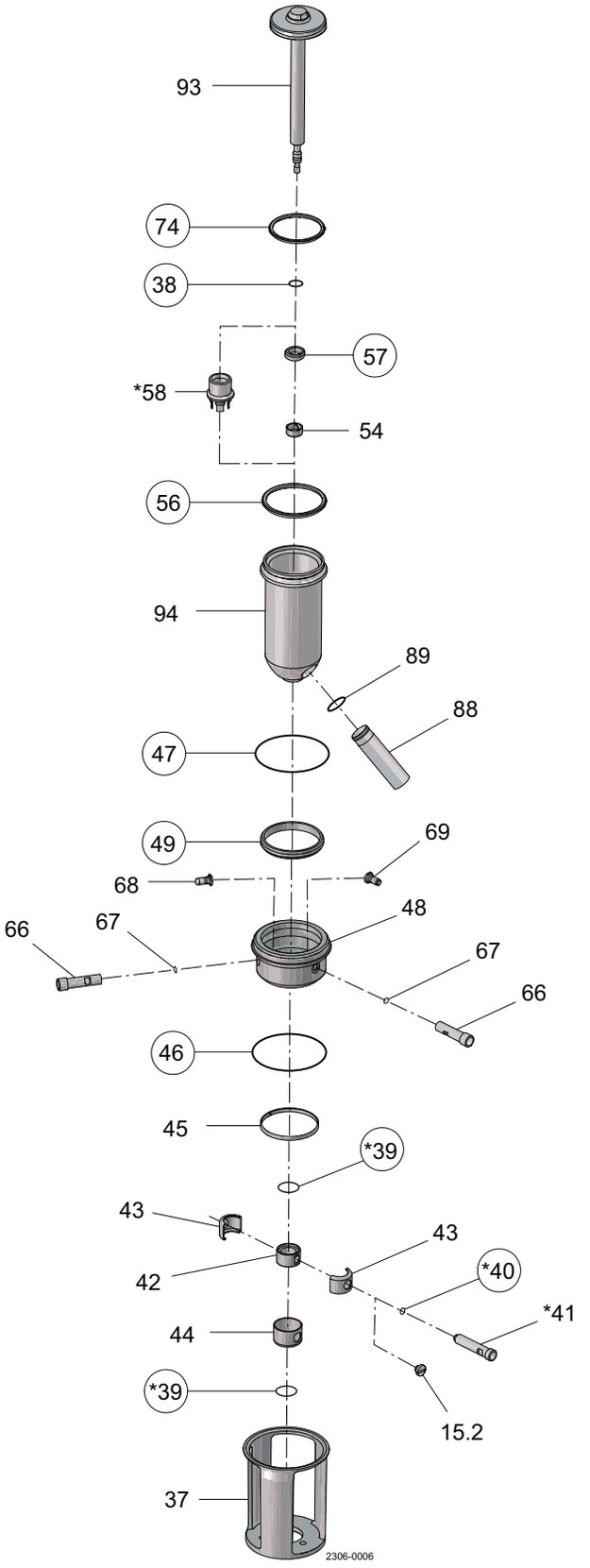

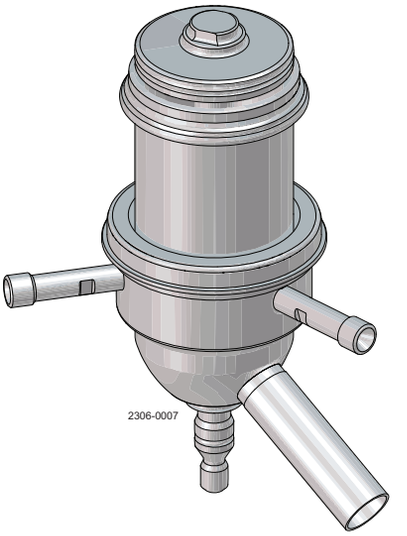

◯ = wear parts

* = with SpiralClean in leakage chamber

		2” Seat ø53.3	2½” + 3” Seat ø81.3	Long stroke 2½” & 3” Seat ø81.3	4” Seat ø100.3
Service kits					
•	Service kit, EPDM	9611926449	9611926453	9611926453	9611926457
•	Service kit, NBR	9611926450	9611926454	9611926454	9611926458
•	Service kit, FPM	9611926451	9611926455	9611926455	9611926459
•	Service kit, HNBR	9611926452	9611926456	9611926456	9611926460

Parts marked with • are included in the service kits.

Note!
If SpiralClean in leakage chamber extra O-rings (2x pos. 39 and 1x pos. 40) is required.
All FPM service kits are supplied with EPDM seal ring, pos. 74.

900699/2

1.7

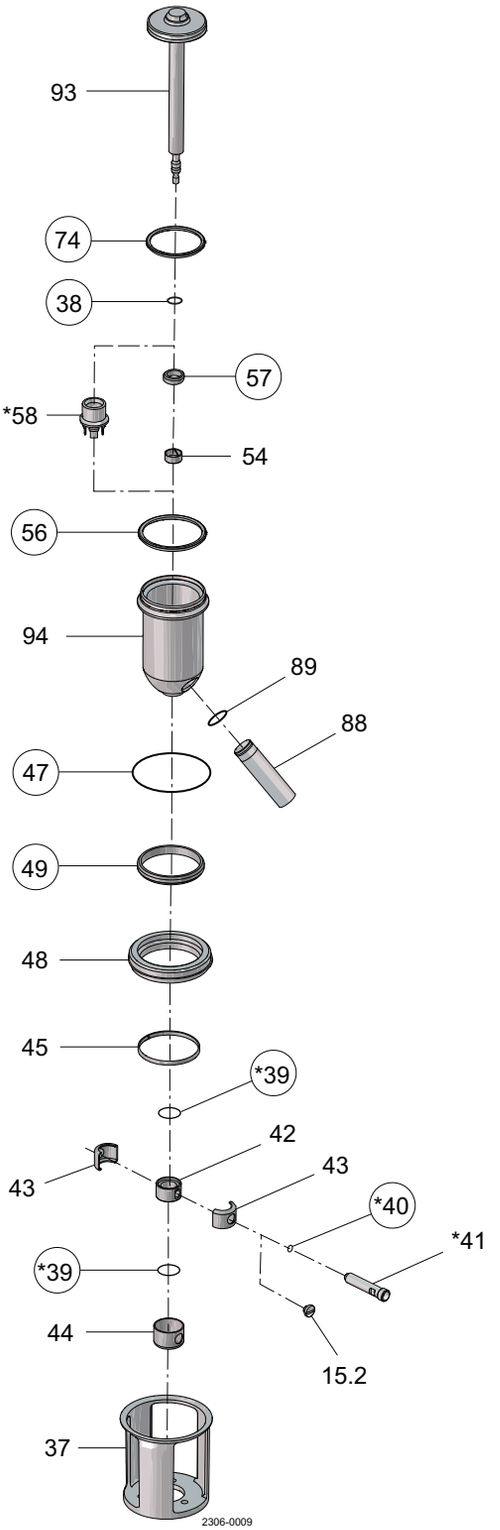

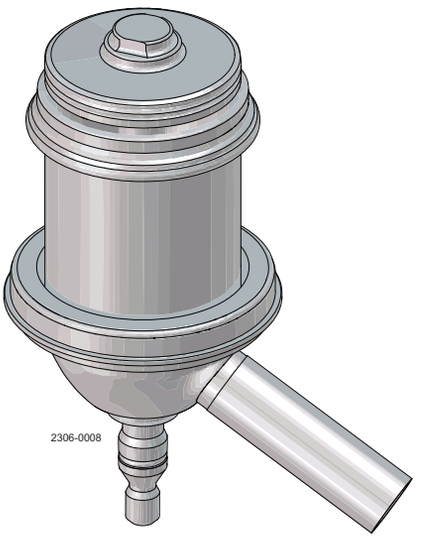

◯ = wear parts

* = with SpiralClean in leakage chamber

Pos		Qty	Denomination	DN/OD 51 DN50 Seat ø53.3	DN/OD 63.5 DN/OD 76.1 DN65/DN80 Seat ø81.3	LongStroke DN/OD 63.5 DN/OD 76.1 DN65/DN80 Seat ø81.3	DN/OD 101.6 DN 100 Seat ø100.3	DN 125 Seat ø115.3	DN 150 Seat ø115.3
Spindle liner									
15		1	Plug	9613414101	9613414101	9613414101	9613414101	9613414101	9613414101
42		1	Spindle liner	9613011601	9613009001	9613009001	9613009001	9613009001	9613009001
43		2	Clamp	9613011801	9613009201	9613009201	9613009201	9613009201	9613009201
44		1	Lock	9613011701	9613009101	9613009101	9613009101	9613009101	9613009101
Extra parts if SpiralClean in vent cavity									
39		2	O-ring, EPDM	9611993492	9611993493	9611993493	9611993493	9611993493	9611993493
40		1	O-ring, EPDM	9611993119	9611993119	9611993119	9611993119	9611993119	9611993119
41		1	Flushing tube	3135710172	3135710172	3135710172	3135710172	3135710172	3135710172
58		1	Spray nozzle, PVDF	9613098801	9613098901	9613098901	9613098901	9613098901	9613098901
Sealing element									
45		1	Guide ring	9613008413	9613008414	9613008414	9613008420	9613008415	9613008415
47	•	1	O-ring, EPDM	9611993632	9611993636	9611993636	9611993640	9611993644	9611993644
	•	1	O-ring, NBR	9611993633	9611993637	9611993637	9611993641	9611993645	9611993645
	•	1	O-ring, FPM	9611993634	9611993638	9611993638	9611993642	9611993646	9611993646
	•	1	O-ring, HNBR	9611993635	9611993639	9611993639	9611993643	9611993647	9611993647
48		1	Sealing element	9613014202	9613006402	9613006402	9613066001	9613017002	9613017002
49	•	1	Lip seal, EPDM	9613008521	9613008526	9613008526	9613008548	9613008531	9613008531
	•	1	Lip seal, NBR	9613008522	9613008527	9613008527	9613008549	9613008532	9613008532
	•	1	Lip seal, FPM	9613008523	9613008528	9613008528	9613008550	9613008533	9613008533
	•	1	Lip seal, HNBR	9613008524	9613008529	9613008529	9613008551	9613008534	9613008534
Upper plug									
54		1	Guide ring, PTFE	9613008401	9613008402	9613008402	9613008402	9613008402	9613008402
56	•	1	Seal ring, EPDM	9613095106	9613095109	9613095109	9613095119	9613095112	9613095112
	•	1	Seal ring, NBR	9613095114	9613095115	9613095115	9613095120	9613095116	9613095116
	•	1	Seal ring, FPM	9613095105	9613095108	9613095108	9613095118	9613095111	9613095111
	•	1	Seal ring, HNBR	9613095104	9613095107	9613095107	9613095117	9613095110	9613095110
57	•	1	Lip seal, EPDM	9613008706	9613008711	9613008711	9613008711	9613008711	9613008711
	•	1	Lip seal, NBR	9613008707	9613008712	9613008712	9613008712	9613008712	9613008712
	•	1	Lip seal, FPM	9613008708	9613008713	9613008713	9613008713	9613008713	9613008713
	•	1	Lip seal, HNBR	9613008709	9613008714	9613008714	9613008714	9613008714	9613008714
88		1	Pipe for balance plug, *	9615248501	9615248502	9615248502	9615248502	9615248502	9615248502
		1	Pipe for balance plug, **	9613098101	9613098102	9613098102	9613098102	9613098102	9613098102
89	•	1	O-ring, EPDM, *	9611995937	9611995938	9611995938	9611995938	9611995938	9611995938
	•	1	O-ring, EPDM, **	9611994603	9611994600	9611994600	9611994600	9611994600	9611994600
94		1	Balance plug, *	9615248701	9615248801	9615248801	9615248901	9615249001	9615249002
		1	Balance plug, **						
		1	Balance plug, complete (Pos. 88, 89, 94 - (Period 1702-))	8010007462	8010007464	8010007464	8010007466	8010007468	8010007469
Lower plug									
38	•	1	O-ring, EPDM	9611993555	9611993572	9611993572	9611993572	9611993572	9611993572
74	•	1	Seal ring, EPDM	9613095206	9613095209	9613095209	9613095219	9613095212	9613095212
	•	1	Seal ring, NBR	9613095214	9613095215	9613095215	9613095220	9613095216	9613095216
	•	1	Seal ring, FPM - Alfa Laval recommends EPDM	9613095205	9613095208	9613095208	9613095218	9613095211	9613095211
	•	1	Seal ring, HNBR	9613095204	9613095207	9613095207	9613095217	9613095210	9613095210
93		1	Tank plug	9613096701	9613096801	9613096801	9613096901	9613097001	9613097002

* = (period 1702 -)

** = (period -1702) - Please buy Balance plug, complete

Pos. 37, please see section

See note below service kits.

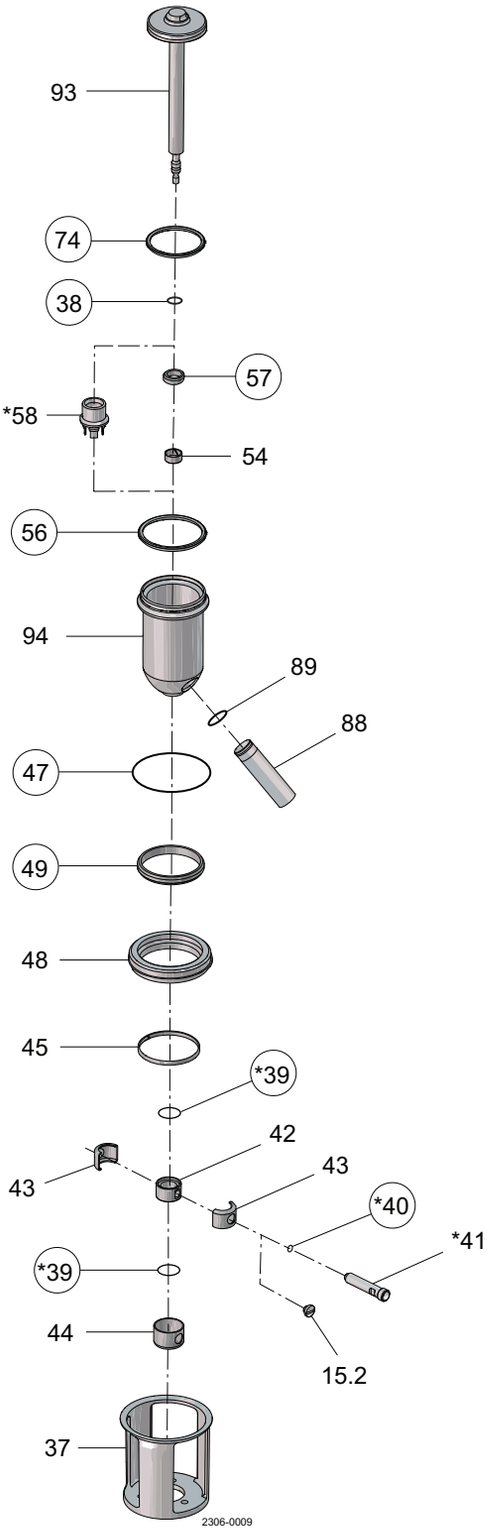

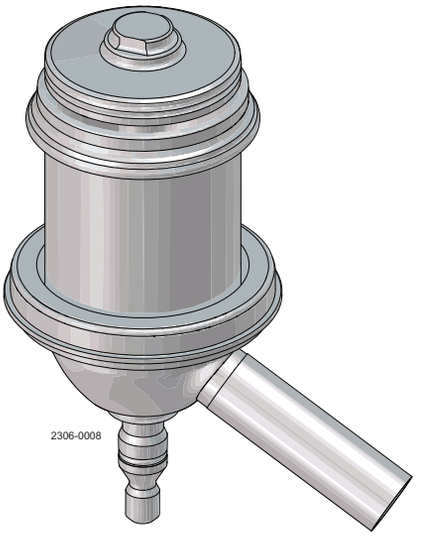

◯ = wear parts

* = with SpiralClean in leakage chamber

		DN/OD 51 DN50 Seat ø53.3	DN/OD 63.5 DN/OD 76.1 DN65/DN80 Seat ø81.3	LongStroke DN/OD 63.5 DN/OD 76.1 DN65/DN80 Seat ø81.3	DN/OD 101.6 DN 100 Seat ø100.3	DN 125 Seat ø115.3	DN 150 Seat ø115.3
•	Service kit, EPDM	9611926433	9611926437	9611926437	9611926441	9611926445	9611926445
•	Service kit, NBR	9611926434	9611926438	9611926438	9611926442	9611926446	9611926446
•	Service kit, FPM	9611926435	9611926439	9611926439	9611926443	9611926447	9611926447
•	Service kit, HNBR	9611926436	9611926440	9611926440	9611926444	9611926448	9611926448

Parts marked with • are included in the service kits.
NOTE!
If SpiralClean in leakage chamber extra O-rings (2x pos. 39 and 1x pos. 40) is required.
All FPM service kits are supplied with EPDM seal ring, pos. 74.

1.7

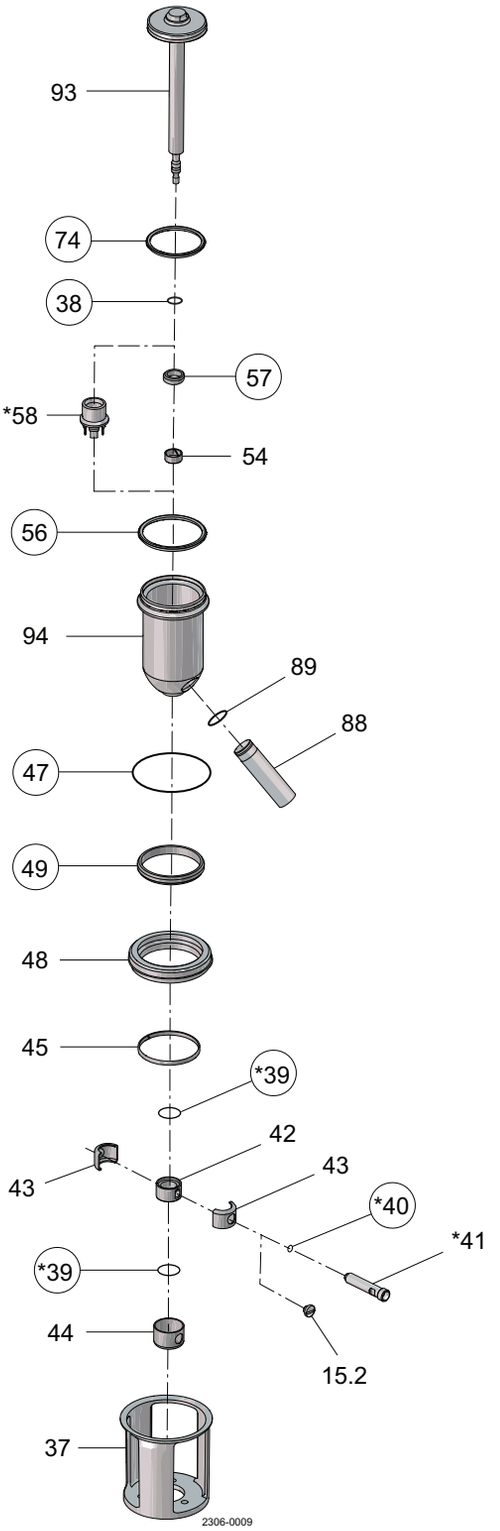

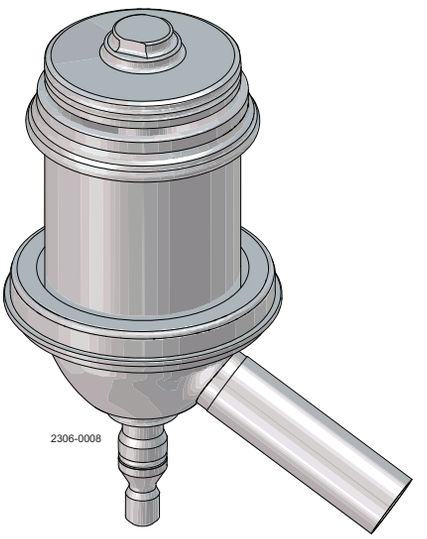

◯ = wear parts

✶ = with SpiralClean in leakage chamber

Pos		Qty	Denomination	2” Seat ø53.3	2½” + 3” Seat ø81.3	Long stroke 2½” & 3” Seat ø81.3	4” Seat ø100.3
Spindle liner							
15		1	Plug	9613414101	9613414101	9613414101	9613414101
42		1	Spindle liner	9613011601	9613009001	9613009001	9613009001
43		2	Clamp	9613011801	9613009201	9613009201	9613009201
44		1	Lock	9613011701	9613009101	9613009101	9613009101
Extra parts if SpiralClean in vent cavity							
39		2	O-ring, EPDM	9611993492	9611993493	9611993493	9611993493
40		1	O-ring, EPDM	9611993119	9611993119	9611993119	9611993119
41		1	Flushing tube	3135710172	3135710172	3135710172	3135710172
58		1	Spray nozzle, PVDF	9613098801	9613098901	9613098901	9613098901
Sealing element							
45		1	Guide ring	9613008413	9613008414	9613008414	9613008420
47	•	1	O-ring , EPDM	9611993632	9611993636	9611993636	9611993640
	•	1	O-ring, NBR	9611993633	9611993637	9611993637	9611993641
	•	1	O-ring, FPM	9611993634	9611993638	9611993638	9611993642
	•	1	O-ring, HNBR	9611993635	9611993639	9611993639	9611993643
48		1	Sealing element, blasted	9613014202	9613006402	9613006402	9613066001
		1	Sealing element, polished	9613014204	9613006404	9613006404	9613066002
49	•	1	Lip seal, EPDM	9613008521	9613008526	9613008526	9613008548
	•	1	Lip seal, NBR	9613008522	9613008527	9613008527	9613008549
	•	1	Lip seal, FPM	9613008523	9613008528	9613008528	9613008550
	•	1	Lip seal, HNBR	9613008524	9613008529	9613008529	9613008551
Upper plug							
54		1	Guide ring, PTFE	9613008401	9613008402	9613008402	9613008402
56	•	1	Seal ring, EPDM	9613095106	9613095109	9613095109	9613095119
	•	1	Seal ring, NBR	9613095114	9613095115	9613095115	9613095120
	•	1	Seal ring, FPM	9613095105	9613095108	9613095108	9613095118
	•	1	Seal ring, HNBR	9613095104	9613095107	9613095107	9613095117
57	•	1	Lip seal, EPDM	9613008706	9613008711	9613008711	9613008711
	•	1	Lip seal, NBR	9613008707	9613008712	9613008712	9613008712
	•	1	Lip seal, FPM	9613008708	9613008713	9613008713	9613008713
	•	1	Lip seal, HNBR	9613008709	9613008714	9613008714	9613008714
88		1	Pipe for balance plug, *	9615248501	9615248502	9615248502	9615248502
		1	Pipe for balance plug, **	9613098101	9613098102	9613098102	9613098102
89	•	1	O-ring, EPDM, *	9611995937	9611995938	9611995938	9611995938
	•	1	O-ring, EPDM, **	9611994603	9611994600	9611994600	9611994600
94		1	Balance plug, *	9615248701	9615248801	9615248801	9615248901
		1	Balance plug, complete (Pos. 88, 89, 94 - (Period 1702-))	8010007462	8010007464	8010007464	8010007466
Lower plug							
38	•	1	O-ring, EPDM	9611993555	9611993572	9611993572	9611993572
74	•	1	Seal ring, EPDM	9613095206	9613095209	9613095209	9613095219
	•	1	Seal ring, NBR	9613095214	9613095215	9613095215	9613095220
	•	1	Seal ring, FPM, Alfa Laval recommends EPDM	9613095205	9613095208	9613095208	9613095218
	•	1	Seal ring, HNBR	9613095204	9613095207	9613095207	9613095217
93		1	Tank plug	9613096701	9613096801	9613096801	9613096901

* = (period 1702 -).

** = (period -1702) - Please buy Balance plug, complete.

Pos. 37, please see section .

See note below service kits.

1.7

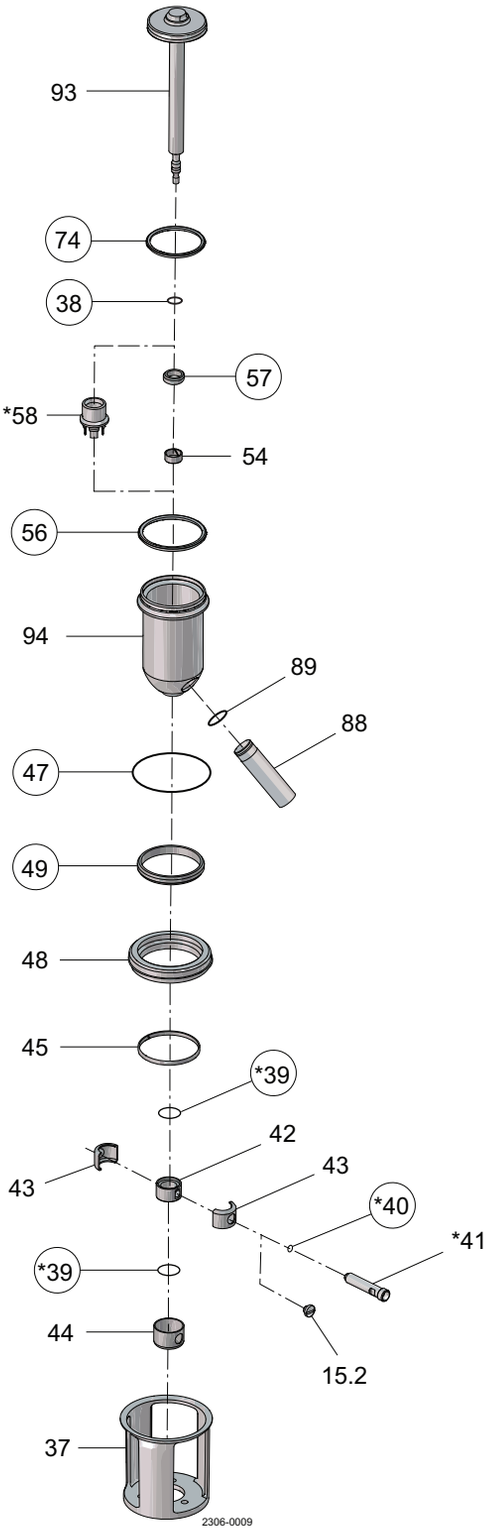

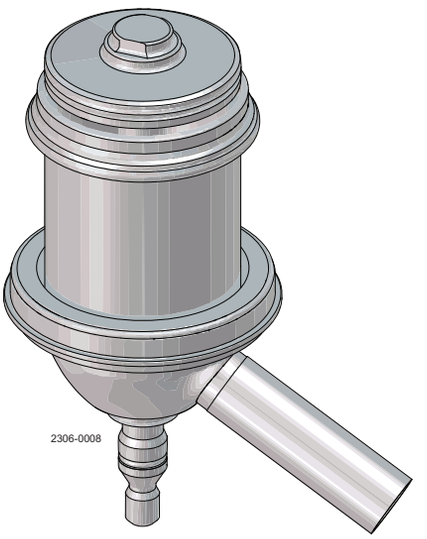

◯ = wear parts

✶ = with SpiralClean in leakage chamber

	2” Seat ø53.3	2½” + 3” Seat ø81.3	Long stroke 2½” & 3” Seat ø81.3	4” Seat ø100.3
Service kits				
• Service kit, EPDM	9611926433	9611926437	9611926437	9611926441
• Service kit, NBR	9611926434	9611926438	9611926438	9611926442
• Service kit, FPM	9611926435	9611926439	9611926439	9611926443
• Service kit, HNBR	9611926436	9611926440	9611926440	9611926444

Parts marked with • are included in the service kits.

NOTE!
If SpiralClean in leakage chamber extra O-rings (2x pos. 39 and 1x pos. 40) is required.
All FPM service kits are supplied with EPDM seal ring, pos. 74.

1.7

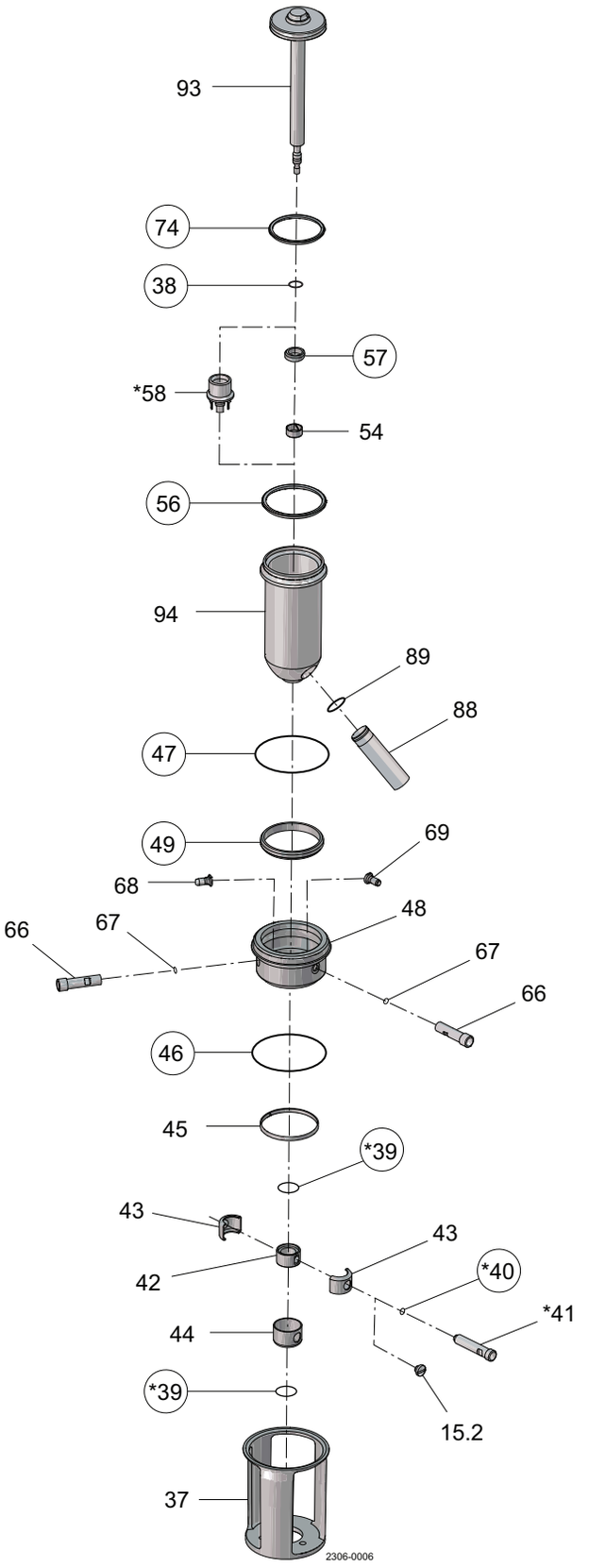

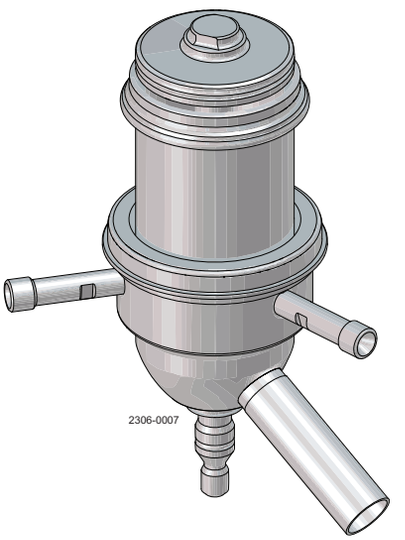

○ = wear parts

* = with SpiralClean in leakage chamber

Pos		Qty	Denomination	DN/OD 51 DN50 Seat ø53.3	DN/OD 63.5 DN/OD 76.1 DN65/DN80 Seat ø81.3	LongStroke DN/OD 63.5 DN/OD 76.1 DN65/DN80 Seat ø81.3	DN/OD 101.6 DN 100 Seat ø100.3	DN 125 Seat ø115.3
Spindle liner								
15		1	Plug	9613414101	9613414101	9613414101	9613414101	9613414101
42		1	Spindle liner	9613011601	9613009001	9613009001	9613009001	9613009001
43		2	Clamp	9613011801	9613009201	9613009201	9613009201	9613009201
44		1	Lock	9613011701	9613009101	9613009101	9613009101	9613009101
Extra parts if SpiralClean in vent cavity								
39		2	O-ring, EPDM	9611993492	9611993493	9611993493	9611993493	9611993493
40		1	O-ring, EPDM	9611993119	9611993119	9611993119	9611993119	9611993119
41		1	Flushing tube	3135710172	3135710172	3135710172	3135710172	3135710172
58		1	Spray nozzle, PVDF	9613098801	9613098901	9613098901	9613098901	9613098901
Sealing element								
45		1	Guide ring	9613008413	9613008414	9613008414	9613008420	9613008415
46	●	1	O-ring, EPDM	9611993650	9611993651	9611993651	9611994407	9611993652
47	●	1	O-ring, EPDM	9611993632	9611993636	9611993636	9611993640	9611993644
	●	1	O-ring, NBR	9611993633	9611993637	9611993637	9611993641	9611993645
	●	1	O-ring, FPM	9611993634	9611993638	9611993638	9611993642	9611993646
	●	1	O-ring, HNBR	9611993635	9611993639	9611993639	9611993643	9611993647
48		1	Sealing element	9613049101	9613049201	9613049201	9613065901	9613049401
49	●	1	Lip seal, EPDM	9613008521	9613008526	9613008526	9613008548	9613008531
	◆	1	Lip seal, NBR	9613008522	9613008527	9613008527	9613008549	9613008532
	●	1	Lip seal, FPM	9613008523	9613008528	9613008528	9613008550	9613008533
	●	1	Lip seal, HNBR	9613008524	9613008529	9613008529	9613008551	9613008534
66		2	Flushing tube	9613007902	9613007903	9613007903	9613007904	9613007905
67	●	2	O-ring, EPDM	9611993119	9611993119	9611993119	9611993119	9611993119
68		1	Drain	9613008001	9613008001	9613008001	9613008001	9613008001
69		1	Nozzle	9613008002	9613008002	9613008002	9613008002	9613008002
Upper plug								
54		1	Guide ring, PTFE	9613008401	9613008402	9613008402	9613008402	9613008402
56	●	1	Seal ring, EPDM	9613095106	9613095109	9613095109	9613095119	9613095112
	●	1	Seal ring, NBR	9613095114	9613095115	9613095115	9613095120	9613095116
	●	1	Seal ring, FPM	9613095105	9613095108	9613095108	9613095118	9613095111
	●	1	Seal ring, HNBR	9613095104	9613095107	9613095107	9613095117	9613095110
57	●	1	Lip seal, EPDM	9613008706	9613008711	9613008711	9613008711	9613008711
	●	1	Lip seal, NBR	9613008707	9613008712	9613008712	9613008712	9613008712
	●	1	Lip seal, FPM	9613008708	9613008713	9613008713	9613008713	9613008713
	●	1	Lip seal, HNBR	9613008709	9613008714	9613008714	9613008714	9613008714
88		1	Pipe for balance plug, *	9615248501	9615248502	9615248502	9615248502	9615248502
		1	Pipe for balance plug, **	9613098101	9613098102	9613098102	9613098102	9613098102
89	●	1	O-ring, EPDM, *	9611995937	9611995938	9611995938	9611995938	9611995938
	●	1	O-ring, EPDM, **	9611994603	9611994600	9611994600	9611994600	9611994600
94		1	Balance plug, *	9615248702	9615248802	9615248802	9615248902	9615249002
		1	Balance plug, **					
		1	Balance plug, complete (Pos. 88, 89, 94 - (Period 1702-))	8010007463	8010007465	8010007465	8010007467	8010007469
Lower plug								
38	●	1	O-ring, EPDM	9611993555	9611993572	9611993572	9611993572	9611993572
74	●	1	Seal ring, EPDM	9613095206	9613095209	9613095209	9613095219	9613095212
	●	1	Seal ring, NBR	9613095214	9613095215	9613095215	9613095220	9613095216
	●	1	Seal ring, FPM - Alfa Laval recommends EPDM	9613095205	9613095208	9613095208	9613095218	9613095211
	●	1	Seal ring, HNBR	9613095204	9613095207	9613095207	9613095217	9613095210
93		1	Tank plug	9613096702	9613096802	9613096802	9613096902	9613097002

* = (period 1702 -)

** = (period -1702) - Please buy Balance plug, complete

Pos. 37, please see section

See note below service kits.

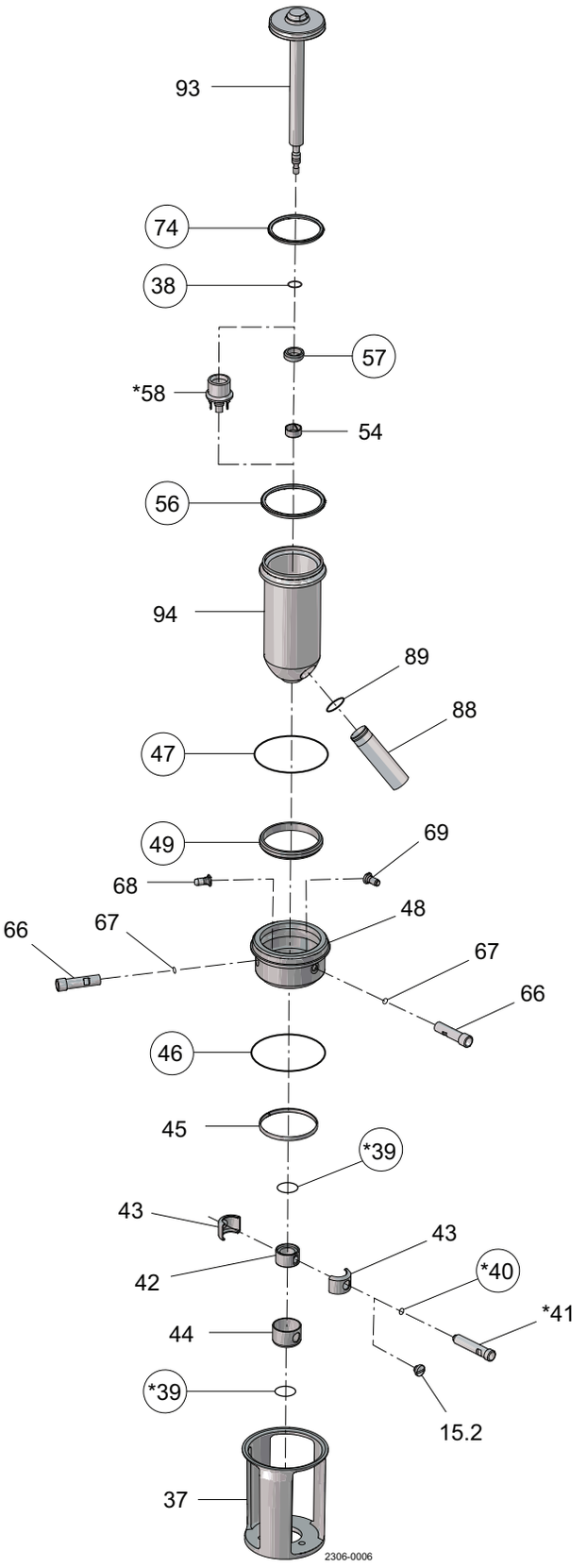

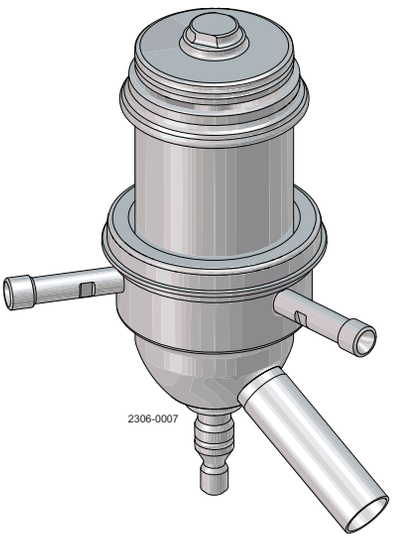

◯ = wear parts

* = with SpiralClean in leakage chamber

				LongStroke		
		DN/OD 51 DN50 Seat ø53.3	DN/OD 63.5 DN/OD 76.1 DN65/DN80 Seat ø81.3	DN/OD 63.5 DN/OD 76.1 DN65/DN80 Seat ø81.3	DN/OD 101.6 DN 100 Seat ø100.3	DN 125 Seat ø115.3
•	Service kit, EPDM	9611926481	9611926485	9611926485	9611926489	9611926493
•	Service kit, NBR	9611926482	9611926486	9611926486	9611926490	9611926494
•	Service kit, FPM	9611926483	9611926487	9611926487	9611926491	9611926495
•	Service kit, HNBR	9611926484	9611926488	9611926488	9611926492	9611926496

Parts marked with • are included in the service kits.

NOTE!
If SpiralClean in leakage chamber extra O-rings (2x pos. 39 and 1x pos. 40) is required.
All FPM service kits are supplied with EPDM seal ring, pos. 74.

1.7

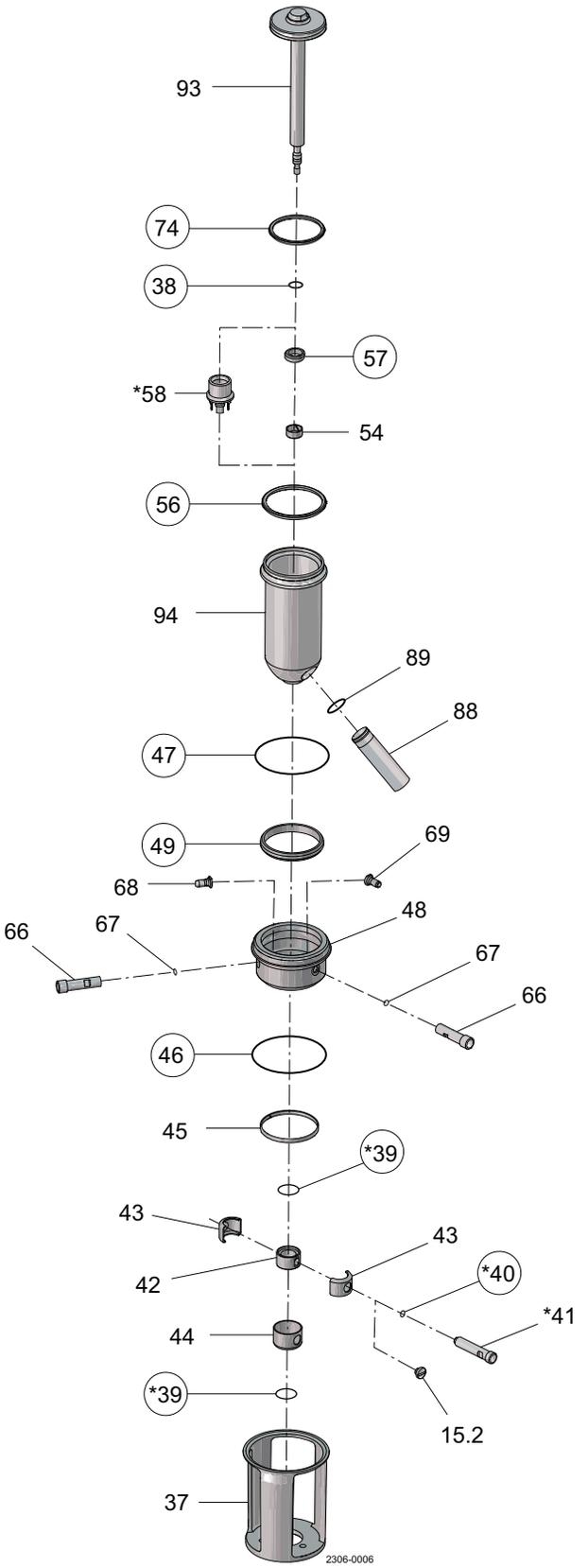

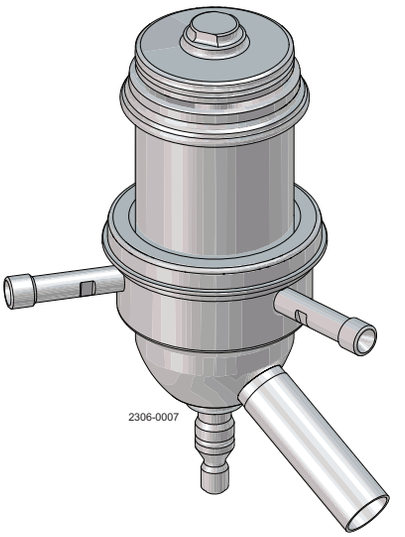

◯ = wear parts

✶ = with SpiralClean in leakage chamber

Pos		Qty	Denomination	2” Seat ø53.3	2½” + 3” Seat ø81.3	Long stroke 2½” & 3” Seat ø81.3	4” Seat ø100.3
Spindle liner							
15		1	Plug	9613414101	9613414101	9613414101	9613414101
42		1	Spindle liner	9613011601	9613009001	9613009001	9613009001
43		2	Clamp	9613011801	9613009201	9613009201	9613009201
44		1	Lock	9613011701	9613009101	9613009101	9613009101
Extra parts if SpiralClean in vent cavity							
39		2	O-ring, EPDM	9611993492	9611993493	9611993493	9611993493
40		1	O-ring, EPDM	9611993119	9611993119	9611993119	9611993119
41		1	Flushing tube	3135710172	3135710172	3135710172	3135710172
58		1	Spray nozzle, PVDF	9613098801	9613098901	9613098901	9613098901
Sealing element							
45		1	Guide ring	9613008413	9613008414	9613008414	9613008420
46	•	1	O-ring, EPDM	9611993650	9611993651	9611993651	9611994407
47	•	1	O-ring, EPDM	9611993632	9611993636	9611993636	9611993640
	•	1	O-ring, NBR	9611993633	9611993637	9611993637	9611993641
	•	1	O-ring, FPM	9611993634	9611993638	9611993638	9611993642
	•	1	O-ring, HNBR	9611993635	9611993639	9611993639	9611993643
48		1	Sealing element, blasted	9613049101	9613049201	9613049201	9613065901
		1	Sealing element, polished	9613049102	9613049202	9613049202	9613065902
49	•	1	Lip seal, EPDM	9613008521	9613008526	9613008526	9613008548
	•	1	Lip seal, NBR	9613008522	9613008527	9613008527	9613008549
	•	1	Lip seal, FPM	9613008523	9613008528	9613008528	9613008550
	•	1	Lip seal, HNBR	9613008524	9613008529	9613008529	9613008551
66		2	Flushing tube	9613007902	9613007903	9613007903	9613007904
67	•	2	O-ring, EPDM	9611993119	9611993119	9611993119	9611993119
68		1	Drain	9613008001	9613008001	9613008001	9613008001
69		1	Nozzle	9613008002	9613008002	9613008002	9613008002
Upper plug							
54		1	Guide ring, PTFE	9613008401	9613008402	9613008402	9613008402
56	•	1	Seal ring, EPDM	9613095106	9613095109	9613095109	9613095119
	•	1	Seal ring, NBR	9613095114	9613095115	9613095115	9613095120
	•	1	Seal ring, FPM	9613095105	9613095108	9613095108	9613095118
	•	1	Seal ring, HNBR	9613095104	9613095107	9613095107	9613095117
57	•	1	Lip seal, EPDM	9613008706	9613008711	9613008711	9613008711
	•	1	Lip seal, NBR	9613008707	9613008712	9613008712	9613008712
	•	1	Lip seal, FPM	9613008708	9613008713	9613008713	9613008713
	•	1	Lip seal, HNBR	9613008709	9613008714	9613008714	9613008714
88		1	Pipe for balance plug, *	9615248501	9615248502	9615248502	9615248502
		1	Pipe for balance plug, **	9613098101	9613098102	9613098102	9613098102
89	•	1	O-ring, EPDM, *	9611995937	9611995938	9611995938	9611995938
	•	1	O-ring, EPDM, **	9611994603	9611994600	9611994600	9611994600
94		1	Balance plug, *	9615248702	9615248802	9615248802	9615248902
		1	Balance plug, **				
		1	Balance plug, complete (Pos. 88, 89, 94 - (Period 1702-))	8010007463	8010007465	8010007465	8010007467
Lower plug							
38	•	1	O-ring, EPDM	9611993555	9611993572	9611993572	9611993572
74	•	1	Seal ring, EPDM	9613095206	9613095209	9613095209	9613095219
	•	1	Seal ring, NBR	9613095214	9613095215	9613095215	9613095220
	•	1	Seal ring, FPM, Alfa Laval recommends EPDM	9613095205	9613095208	9613095208	9613095218
	•	1	Seal ring, HNBR	9613095204	9613095207	9613095207	9613095217
93		1	Tank plug	9613096702	9613096802	9613096802	9613096902

* = (period 1702 -).

** = (period -1702) - Please buy Balance plug, complete.

Pos. 37, please see section .

See note below service kits.

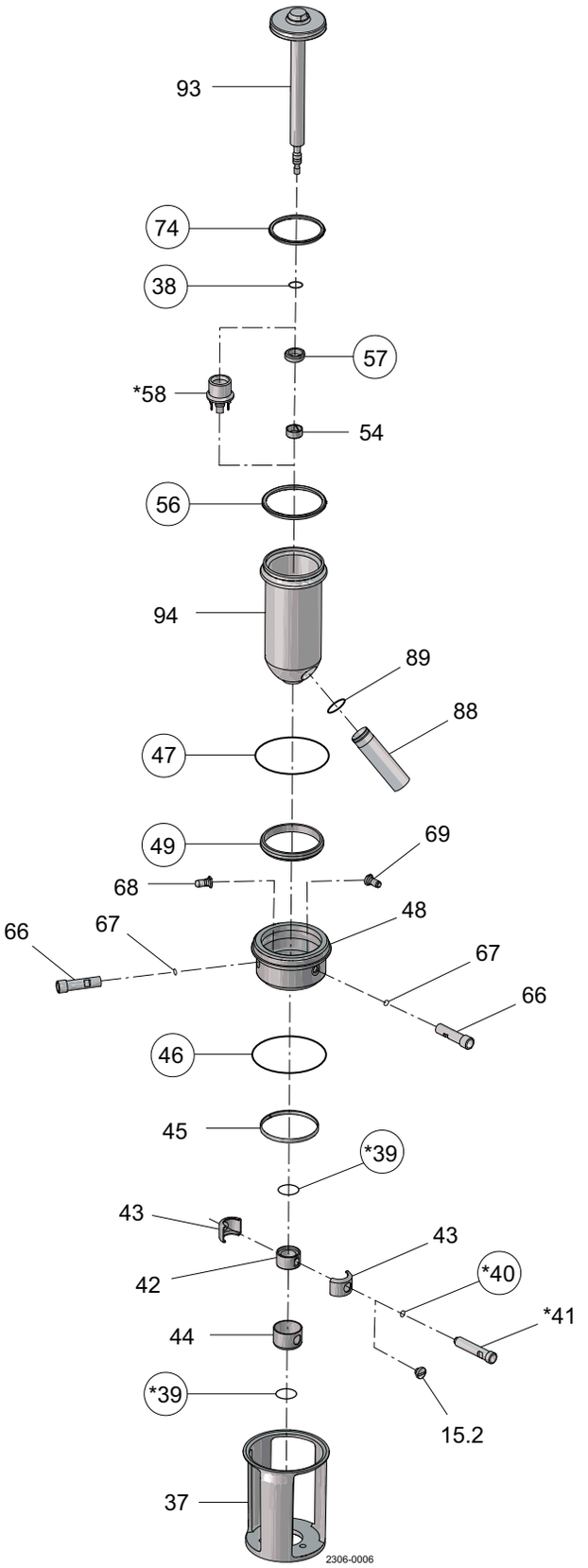

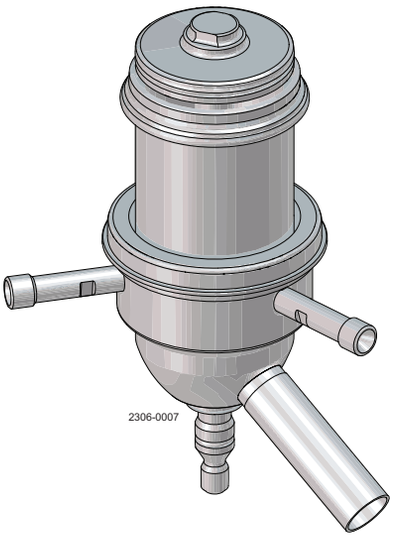

◯ = wear parts

✶ = with SpiralClean in leakage chamber

		2” Seat ø53.3	2½” + 3” Seat ø81.3	Long stroke 2½” & 3” Seat ø81.3	4” Seat ø100.3
Service kits					
•	Service kit, EPDM	9611926481	9611926485	9611926485	9611926489
•	Service kit, NBR	9611926482	9611926486	9611926486	9611926490
•	Service kit, FPM	9611926483	9611926487	9611926487	9611926491
•	Service kit, HNBR	9611926484	9611926488	9611926488	9611926492

Parts marked with • are included in the service kits.

NOTE!
If SpiralClean in leakage chamber extra O-rings (2x pos. 39 and 1x pos. 40) is required.
All FPM service kits are supplied with EPDM seal ring, pos. 74.

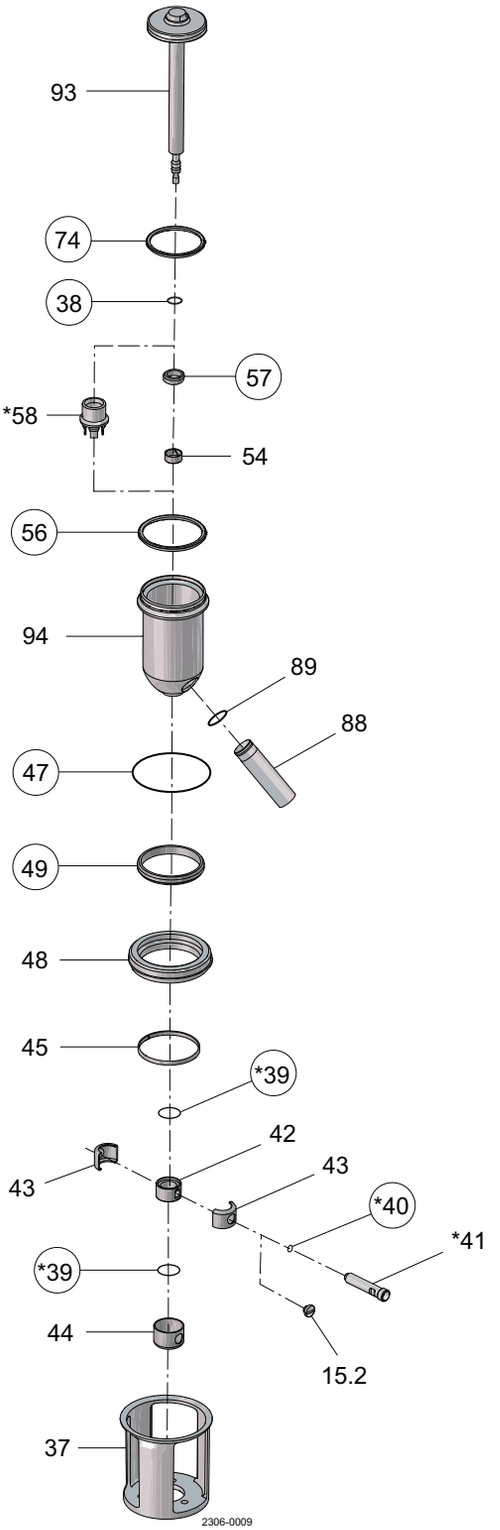

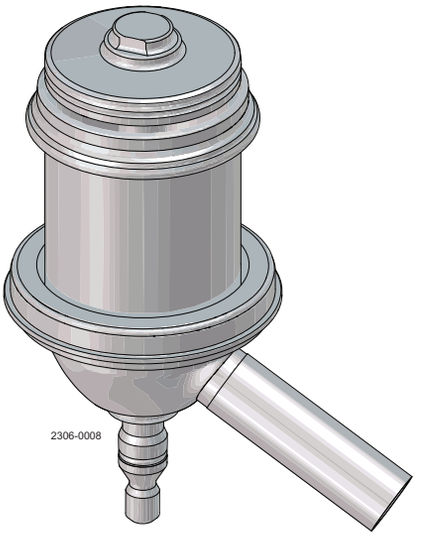

◯ = wear parts

* = with SpiralClean in leakage chamber

Pos		Qty	Denomination	DN/OD 51 DN50 Seat ø53.3	DN/OD 63.5 DN 65 DN/OD 76.1 DN65/DN80 Seat ø81.3	LongStroke DN/OD 63.5 DN 65 DN/OD 76.1 DN65/DN80 Seat ø81.3	DN/OD 101.6 DN 100 Seat ø100.3	DN 125 Seat ø115.3	DN 150 Seat ø115.3
Spindle liner									
15		1	Plug	9613414101	9613414101	9613414101	9613414101	9613414101	9613414101
42		1	Spindle liner	9613011601	9613009001	9613009001	9613009001	9613009001	9613009001
43		2	Clamp	9613011801	9613009201	9613009201	9613009201	9613009201	9613009201
44		1	Lock	9613011701	9613009101	9613009101	9613009101	9613009101	9613009101
Extra parts if SpiralClean in vent cavity									
39		2	O-ring, EPDM	9611993492	9611993493	9611993493	9611993493	9611993493	9611993493
40		1	O-ring, EPDM	9611993119	9611993119	9611993119	9611993119	9611993119	9611993119
41		1	Flushing tube	3135710172	3135710172	3135710172	3135710172	3135710172	3135710172
58		1	Spray nozzle, PVDF	9613098801	9613098901	9613098901	9613098901	9613098901	9613098901
Sealing element									
45		1	Guide ring	9613008413	9613008414	9613008414	9613008420	9613008415	9613008415
47	•	1	O-ring, EPDM	9611993632	9611993636	9611993636	9611993640	9611993644	9611993644
	•	1	O-ring, NBR	9611993633	9611993637	9611993637	9611993641	9611993645	9611993645
	•	1	O-ring, FPM	9611993634	9611993638	9611993638	9611993642	9611993646	9611993646
	•	1	O-ring, HNBR	9611993635	9611993639	9611993639	9611993643	9611993647	9611993647
48		1	Ssealing element	9613014202	9613006402	9613006402	9613066001	9613017002	9613017002
49	•	1	Lip seal, EPDM	9613008521	9613008526	9613008526	9613008548	9613008531	9613008531
	•	1	Lip seal, NBR	9613008522	9613008527	9613008527	9613008549	9613008532	9613008532
	•	1	Lip seal, FPM	9613008523	9613008528	9613008528	9613008550	9613008533	9613008533
	•	1	Lip seal, HNBR	9613008524	9613008529	9613008529	9613008551	9613008534	9613008534
Upper plug									
54		1	Guide ring, PTFE	9613008401	9613008402	9613008402	9613008402	9613008402	9613008402
56	•	1	Seal ring, EPDM	9613095106	9613095109	9613095109	9613095119	9613095112	9613095112
	•	1	Seal ring, NBR	9613095114	9613095115	9613095115	9613095120	9613095116	9613095116
	•	1	Seal ring, FPM	9613095105	9613095108	9613095108	9613095118	9613095111	9613095111
	•	1	Seal ring, HNBR	9613095104	9613095107	9613095107	9613095117	9613095110	9613095110
57	•	1	Lip seal, EPDM	9613008706	9613008711	9613008711	9613008711	9613008711	9613008711
	•	1	Lip seal, NBR	9613008707	9613008712	9613008712	9613008712	9613008712	9613008712
	•	1	Lip seal, FPM	9613008708	9613008713	9613008713	9613008713	9613008713	9613008713
	•	1	Lip seal, HNBR	9613008709	9613008714	9613008714	9613008714	9613008714	9613008714
88		1	Pipe for balance plug, *	9615248501	9615248502	9615248502	9615248502	9615248502	9615248502
		1	Pipe for balance plug, **	9613098101	9613098102	9613098102	9613098102	9613098102	9613098102
89	•	1	O-ring, EPDM, *	9611995937	9611995938	9611995938	9611995938	9611995938	9611995938
	•	1	O-ring, EPDM, **	9611994603	9611994600	9611994600	9611994600	9611994600	9611994600
94		1	Balance plug, *	9615248701	9615248801	9615248801	9615248901	9615249001	9615249002
		1	Balance plug, **						
		1	Balance plug, complete (Pos. 88, 89, 94 - (Period 1702-))	8010007462	8010007464	8010007464	8010007466	8010007468	8010007469
Lower plug									
38	•	1	O-ring, EPDM	9611993555	9611993572	9611993572	9611993572	9611993572	9611993572
74	•	1	Seal ring, EPDM	9613095206	9613095209	9613095209	9613095219	9613095212	9613095212
	•	1	Seal ring, NBR	9613095214	9613095215	9613095215	9613095220	9613095216	9613095216
	•	1	Seal ring, FPM Alfa Laval recommends EPDM	9613095205	9613095208	9613095208	9613095218	9613095211	9613095211
	•	1	Seal ring, HNBR	9613095204	9613095207	9613095207	9613095217	9613095210	9613095210
93		1	Tank plug	9613096701	9613096801	9613096801	9613096901	9613097001	9613097002

* = (period 1702 -)

** = (period -1702) - Please buy Balance plug, complete

Pos. 37, please see section

See note below service kits.

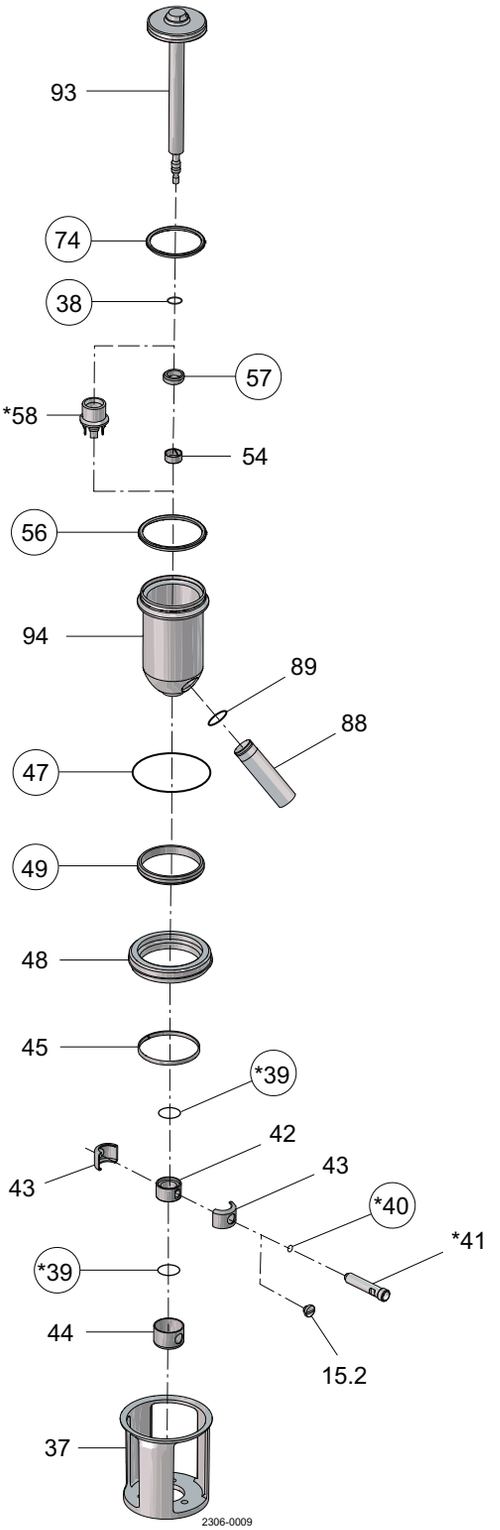

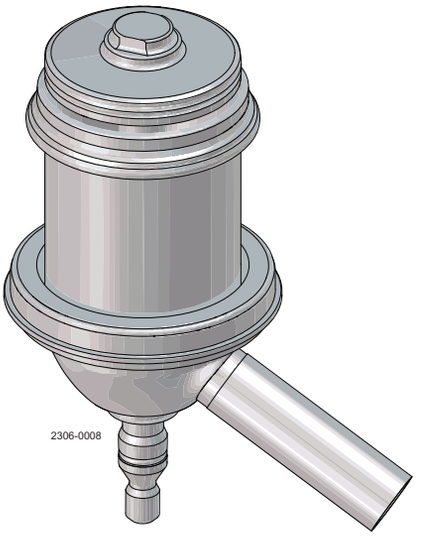

◯ = wear parts

* = with SpiralClean in leakage chamber

				LongStroke			
			DN/OD 63.5	DN/OD 63.5			
			DN65	DN65			
		DN/OD 51	DN/OD 76.1	DN/OD 76.1	DN/OD 101.6		
		DN50	DN65/DN80	DN65/DN80	DN 100	DN 125	DN 150
		Seat ø53.3	Seat ø81.3	Seat ø81.3	Seat ø100.3	Seat ø115.3	Seat ø115.3
•	Service kit, EPDM	9611926465	9611926469	9611926469	9611926473	9611926477	9611926477
•	Service kit, NBR	9611926466	9611926470	9611926470	9611926474	9611926478	9611926478
•	Service kit, FPM	9611926467	9611926471	9611926471	9611926475	9611926479	9611926479
•	Service kit, HNBR	9611926468	9611926472	9611926472	9611926476	9611926480	9611926480

Parts marked with • are included in the service kits.

NOTE!
If SpiralClean in leakage chamber extra O-rings (2x pos. 39 and 1x pos. 40) is required.
All FPM service kits are supplied with EPDM seal ring, pos. 74.

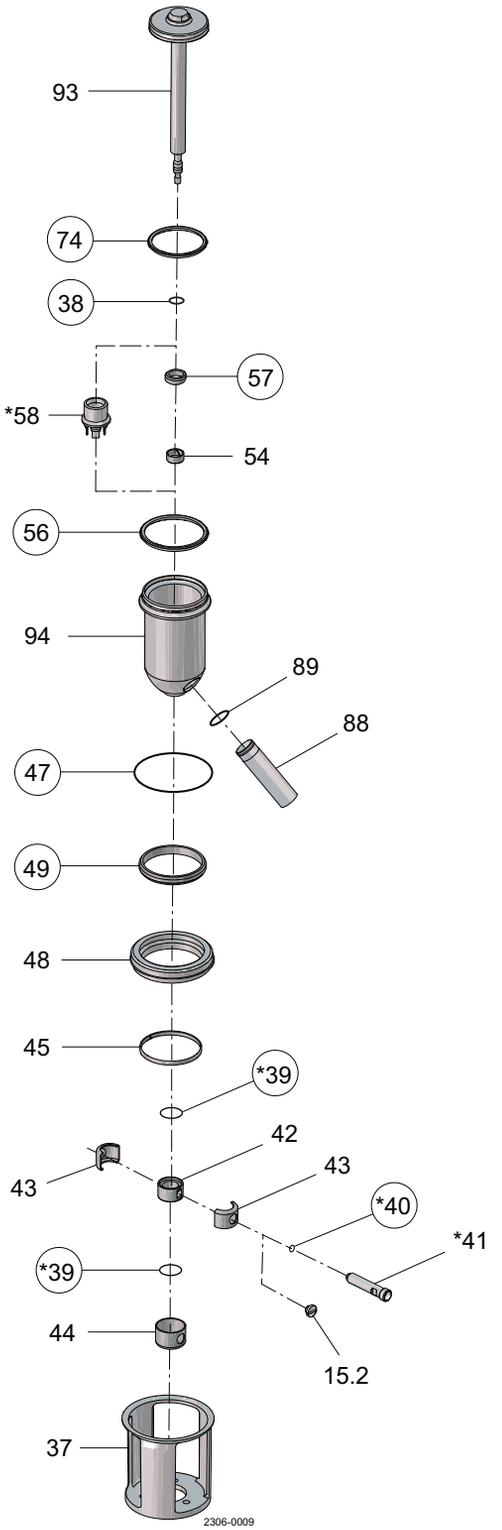

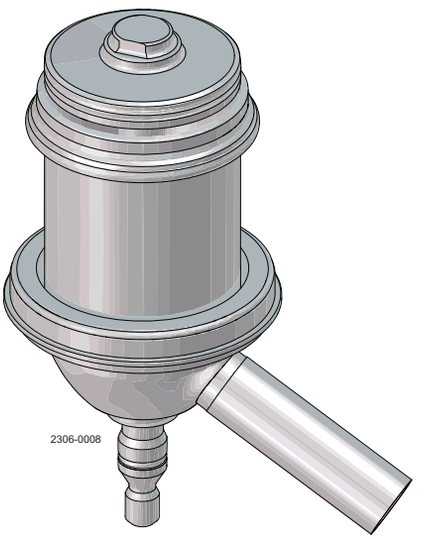

◯ = wear parts

✶ = with SpiralClean in leakage chamber

Pos		Qty	Denomination	2” Seat ø53.3	2½” + 3” Seat ø81.3	Long stroke 2½” & 3” Seat ø81.3	4” Seat ø100.3
Spindle liner							
15		1	Plug	9613414101	9613414101	9613414101	9613414101
42		1	Spindle liner	9613011601	9613009001	9613009001	9613009001
43		2	Clamp	9613011801	9613009201	9613009201	9613009201
44		1	Lock	9613011701	9613009101	9613009101	9613009101
Extra parts if SpiralClean in vent cavity							
39		2	O-ring, EPDM	9611993492	9611993493	9611993493	9611993493
40		1	O-ring, EPDM	9611993119	9611993119	9611993119	9611993119
41		1	Flushing tube	3135710172	3135710172	3135710172	3135710172
58		1	Spray nozzle, PVDF	9613098801	9613098901	9613098901	9613098901
Sealing element							
45		1	Guide ring	9613008413	9613008414	9613008414	9613008420
47	•	1	O-ring, EPDM	9611993632	9611993636	9611993636	9611993640
	•	1	O-ring, NBR	9611993633	9611993637	9611993637	9611993641
	•	1	O-ring, FPM	9611993634	9611993638	9611993638	9611993642
	•	1	O-ring, HNBR	9611993635	9611993639	9611993639	9611993643
48		1	Sealing element, blasted	9613014202	9613006402	9613006402	9613066001
		1	Sealing element, polished	9613014204	9613006404	9613006404	9613066002
49	•	1	Lip seal, EPDM	9613008521	9613008526	9613008526	9613008548
	•	1	Lip seal, NBR	9613008522	9613008527	9613008527	9613008549
	•	1	Lip seal, FPM	9613008523	9613008528	9613008528	9613008550
	•	1	Lip seal, HNBR	9613008524	9613008529	9613008529	9613008551
Upper plug							
54		1	Guide ring, PTFE	9613008401	9613008402	9613008402	9613008402
56	•	1	Seal ring, EPDM	9613095106	9613095109	9613095109	9613095119
	•	1	Seal ring, NBR	9613095114	9613095115	9613095115	9613095120
	•	1	Seal ring, FPM	9613095105	9613095108	9613095108	9613095118
	•	1	Seal ring, HNBR	9613095104	9613095107	9613095107	9613095117
57	•	1	Lip seal, EPDM	9613008706	9613008711	9613008711	9613008711
	•	1	Lip seal, NBR	9613008707	9613008712	9613008712	9613008712
	•	1	Lip seal, FPM	9613008708	9613008713	9613008713	9613008713
	•	1	Lip seal, HNBR	9613008709	9613008714	9613008714	9613008714
88		1	Pipe for balance plug, *	9615248501	9615248502	9615248502	9615248502
		1	Pipe for balance plug, **	9613098101	9613098102	9613098102	9613098102
89	•	1	O-ring, EPDM, *	9611995937	9611995938	9611995938	9611995938
	•	1	O-ring, EPDM, **	9611994603	9611994600	9611994600	9611994600
94		1	Balance plug, *	9615248701	9615248801	9615248801	9615248901
		1	Balance plug, **				
		1	Balance plug, complete (Pos. 88, 89, 94 - (Period 1702-))	8010007462	8010007464	8010007464	8010007466
Lower plug							
38	•	1	O-ring, EPDM	9611993555	9611993572	9611993572	9611993572
74	•	1	Seal ring, EPDM	9613095206	9613095209	9613095209	9613095219
	•	1	Seal ring, NBR	9613095214	9613095215	9613095215	9613095220
	•	1	Seal ring, FPM, Alfa Laval recommends EPDM	9613095205	9613095208	9613095208	9613095218
	•	1	Seal ring, HNBR	9613095204	9613095207	9613095207	9613095217
93		1	Tank plug	9613096701	9613096801	9613096801	9613096901

* = (period 1702 -).

** = (period -1702) - Please buy Balance plug, complete.

Pos. 37, please see section .

See note below service kits.

1.7

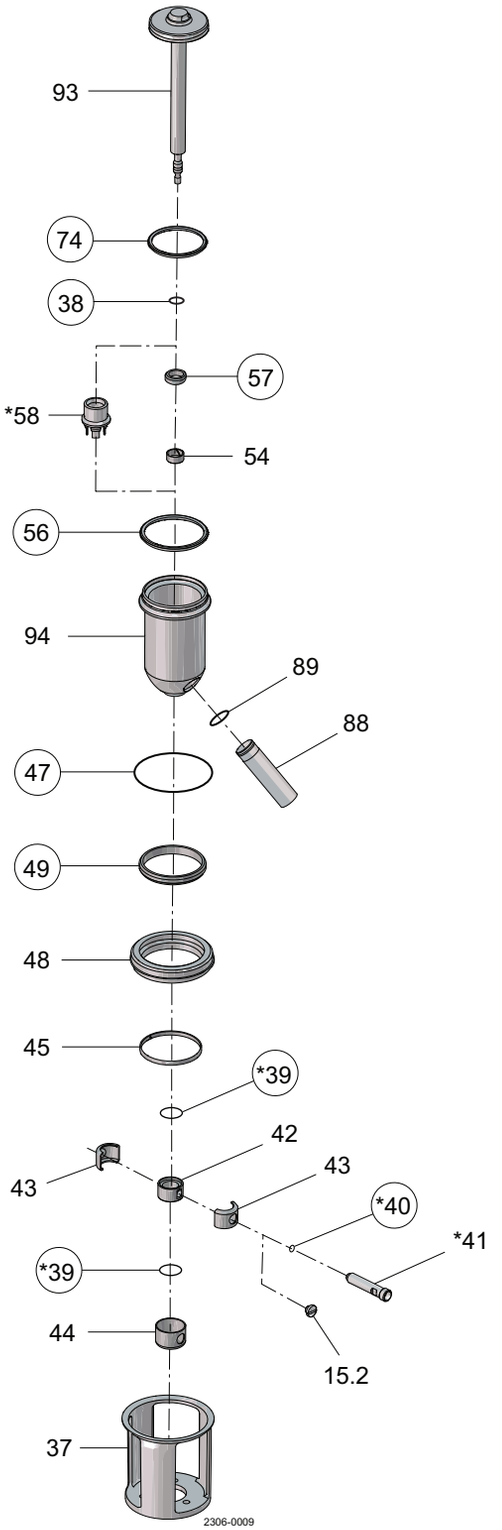

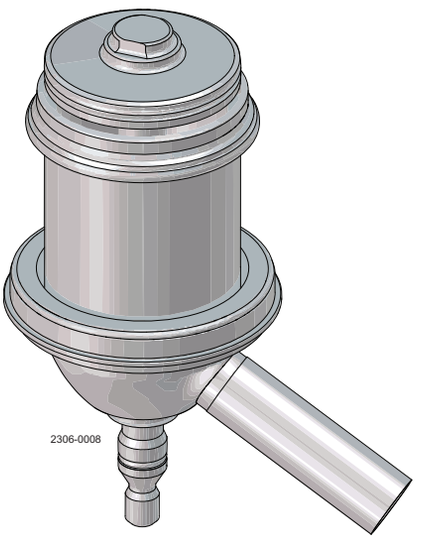

◯ = wear parts

✶ = with SpiralClean in leakage chamber

		2” Seat ø53.3	2½” + 3” Seat ø81.3	Long stroke 2½” & 3” Seat ø81.3	4” Seat ø100.3
Service kits					
•	Service kit, EPDM	9611926433	9611926437	9611926437	9611926441
•	Service kit, NBR	9611926434	9611926438	9611926438	9611926442
•	Service kit,FPM	9611926435	9611926439	9611926439	9611926443
•	Service kit, HNBR	9611926436	9611926440	9611926440	9611926444

Parts marked with • are included in the service kits.

Note!
If SpiralClean in leakage chamber extra O-rings (2x pos. 39 and 1x pos. 40) is required.
All FPM service kits are supplied with EPDM seal ring, pos. 74.

1.7

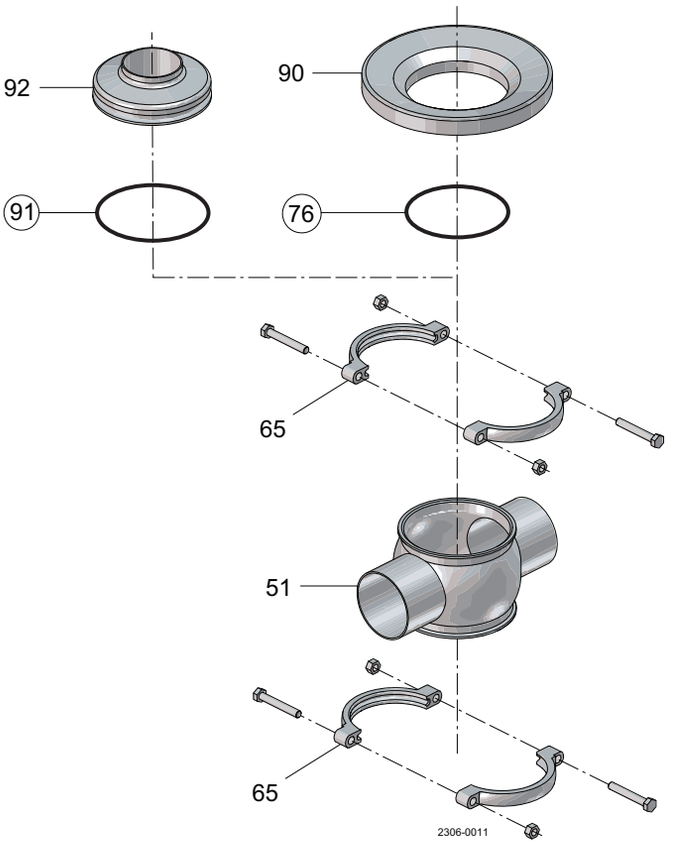

Pos	Qty	Denomination	DN/OD 51 seat ø53.3	DN 50 seat ø53.3	DN/OD 63.5 seat ø81.3	DN 65 seat ø81.3	DN/OD 76.1 seat ø81.3	DN 80 seat ø81.3
37	1	Intermediate piece, setup12	9613097501	9613097502	9613097601	9613097602	9613097603	9613097604
	1	Intermediate piece, setup 6	9613097503	9613097504	9613097605	9613097606	9613097607	9613097608
65	2	Clamp with screws	9613017802	9613017802	9613017902	9613017902	9613017902	9613017902
51	1	Valve body, upper, type 20	9613058005	9613058105	9613058007	9613058107	9613058009	9613058109
	1	Valve body, upper, type 30	9613058006	9613058106	9613058008	9613058108	9613058010	9613058110
Tank flange								
76	1	O-ring, EPDM	9611993632	9611993632	9611993636	9611993636	9611993636	9611993636
	1	O-ring, NBR	9611993633	9611993633	9611993637	9611993637	9611993637	9611993637
	1	O-ring, FPM	9611993634	9611993634	9611993638	9611993638	9611993638	9611993638
	1	O-ring, HNBR	9611993635	9611993635	9611993639	9611993639	9611993639	9611993639
90	1	Tank flange	9613099101	9613099101	9613099201	9613099201	9613099201	9613099201
Stub flange								
91	1	O-ring, EPDM	9611994606	9611994606	9611994610	9611994610	9611994610	9611994610
	1	O-ring, NBR	9611994607	9611994607	9611994611	9611994611	9611994611	9611994611
	1	O-ring, FPM	9611994290	9611994290	9611994612	9611994612	9611994612	9611994612
	1	O-ring, HNBR	9611994609	9611994609	9611994613	9611994613	9611994613	9611994613
92	1	Stub flange	9613004701	9613004702	9613004801	9613004802	9613004803	9613004804

Pos	Qty	Denomination	LongStroke DN/OD 63.5 seat ø81.3	LongStroke DN65 seat ø81.3	LongStroke DN/OD 76.1 seat ø81.3	LongStroke DN/OD 80 seat ø81.3
37	1	Intermediate piece, setup 12	9613097617	9613097618	9613097619	9613097620
	1	Intermediate piece, setup 6	9613097621	9613097622	9613097623	9613097624
65	2	Clamp with screws	9613017902	9613017902	9613017902	9613017902
51	1	Valve body, upper, type 20	9613058007	9613058107	9613058009	9613058109
	1	Valve body, upper, type 30	9613058008	9613058108	9613058010	9613058110
Tank flange						
76	1	O-ring,, EPDM	9611993636	9611993636	9611993636	9611993636
	1	O-ring, NBR	9611993637	9611993637	9611993637	9611993637
	1	O-ring, FPM	9611993638	9611993638	9611993638	9611993638
	1	O-ring,, HNBR	9611993639	9611993639	9611993639	9611993639
90	1	Tank flange	9613099201	9613099201	9613099201	9613099201
Stub flange						
91	1	O-ring, EPDM	9611994610	9611994610	9611994610	9611994610
	1	O-ring, NBR	9611994611	9611994611	9611994611	9611994611
	1	O-ring, FPM	9611994612	9611994612	9611994612	9611994612
	1	O-ring, HNBR	9611994613	9611994613	9611994613	9611994613
92	1	Stub flange	9613004801	9613004802	9613004803	9613004804

Pos	Qty	Denomination	DN/OD 101.6 seat ø100.3	DN100 seat ø100.3	DN 125 seat ø115.3	DN 150 seat ø115.3
37	1	Intermediate piece, setup 12	9613097701	9613097702	9613097801	9613097802
	1	Intermediate piece, setup 6	9613097703	9613097704	9613097803	N/A
65	2	Clamp with screws	9613018002	9613018002		
	1	Clamp with screws			9613018002	9613018002
	1	Clamp with screws			9613018102	9613018102
51	1	Valve body, upper, type 20	9613058037	9613058149	9613058113	9613058115
	1	Valve body, upper, type 30	9613058038	9613058150	9613058114	9613058116
Tank flange						
76	1	O-ring, EPDM	9611993640	9611993640	9611993640	9611993640
	1	O-ring, NBR	9611993641	9611993641	9611993641	9611993641
	1	O-ring, FPM	9611993642	9611993642	9611993642	9611993642
	1	O-ring, HNBR	9611993643	9611993643	9611993643	9611993643
90	1	Tank flange	9613099301	9613099301	9613099301	9613099301
Stub flange						
91	1	O-ring, EPDM	9611994614	9611994614	9611993640	9611993640
	1	O-ring, NBR	9611994615	9611994615	9611993641	9611993641
	1	O-ring, FPM	9611994616	9611994616	9611993642	9611993642
	1	O-ring, HNBR	9611994617	9611994617	9611993643	9611993643
92	1	Stub flange	9613004901	9613004902	9613005001	9613005001

1.7

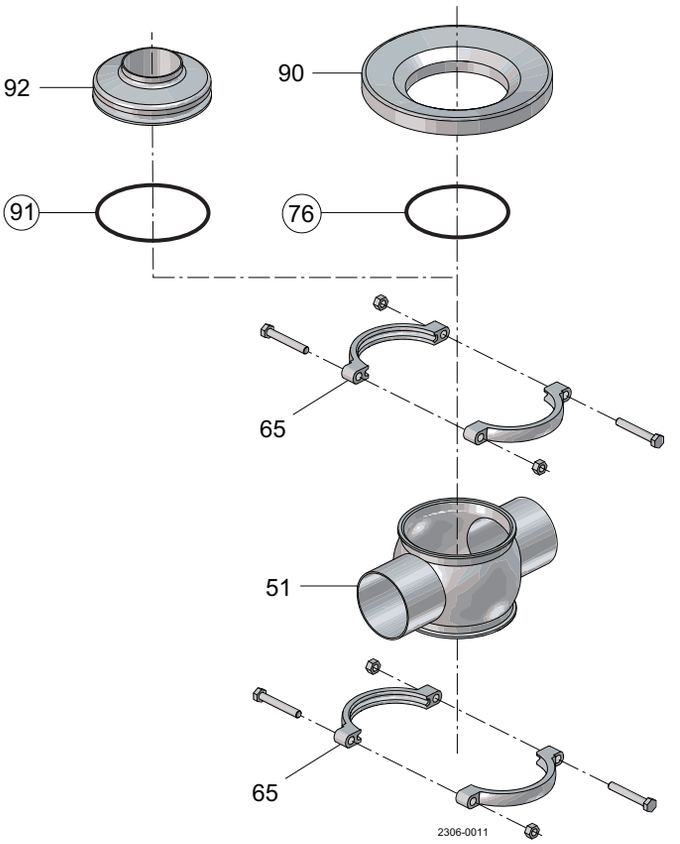

Pos		Qty	Denomination	2” Seat ø53.3	2½” Seat ø81.3	3” Seat ø81.3	Longstroke 2½” Seat ø81.3	Longstroke 3” Seat ø81.3	4” Seat ø100.3
37		1	Intermediate piece, without cip, blasted	9613097501	9613097601	9613097603	9613097617	9613097619	9613097701
		1	Intermediate piece, with cip, blasted	9613097503	9613097605	9613097607	9613097621	9613097623	9613097703
		1	Intermediate piece, without cip, polished	9613097505	9613097609	9613097611	9613097625	9613097627	9613097705
		1	Intermediate piece, with cip, polished	9613097507	9613097613	9613097615	9613097629	9613097631	9613097707
65		2	Clamp with screws	9613017803	9613017903	9613017903	9613017903	9613017903	9613018003
External and internal blasted									
51		1	Valve body, upper, type 20	9613058005	9613058007	9613058009	9613058007	9613058009	9613058037
		1	Valve body, upper, type 30	9613058006	9613058008	9613058010	9613058008	9613058010	9613058038
External blasted / internal polished									
		1	Valve body, upper, type 20	9613058017	9613058019	9613058021	9613058019	9613058021	9613058039
		1	Valve body, upper, type 30	9613058018	9613058020	9613058022	9613058020	9613058022	9613058040
External and internal polished									
		1	Valve body, upper, type 20	9613058029	9613058031	9613058033	9613058031	9613058033	9613058041
		1	Valve body, upper, type 30	9613058030	9613058032	9613058034	9613058032	9613058034	9613058042
Tank flange									
76	•	1	O-ring, EPDM	9611993632	9611993636	9611993636	9611993636	9611993636	9611993640
	•	1	O-ring, NBR	9611993633	9611993637	9611993637	9611993637	9611993637	9611993641
	•	1	O-ring, FPM	9611993634	9611993638	9611993638	9611993638	9611993638	9611993642
	•	1	O-ring, HNBR	9611993635	9611993639	9611993639	9611993639	9611993639	9611993643
90		1	Tank flange	9613099101	9613099201	9613099201	9613099201	9613099201	9613099301
Stub flange									
91	•	1	O-ring, EPDM	9611994606	9611994610	9611994610	9611994610	9611994610	9611994614
	•	1	O-ring, NBR	9611994607	9611994611	9611994611	9611994611	9611994611	9611994615
	•	1	O-ring, FPM	9611994290	9611994612	9611994612	9611994612	9611994612	9611994616
	•	1	O-ring, HNBR	9611994609	9611994613	9611994613	9611994613	9611994613	9611994617
92		1	Pipe flange	9613004701	9613004801	9613004803	9613004801	9613004803	9613004901

1.7

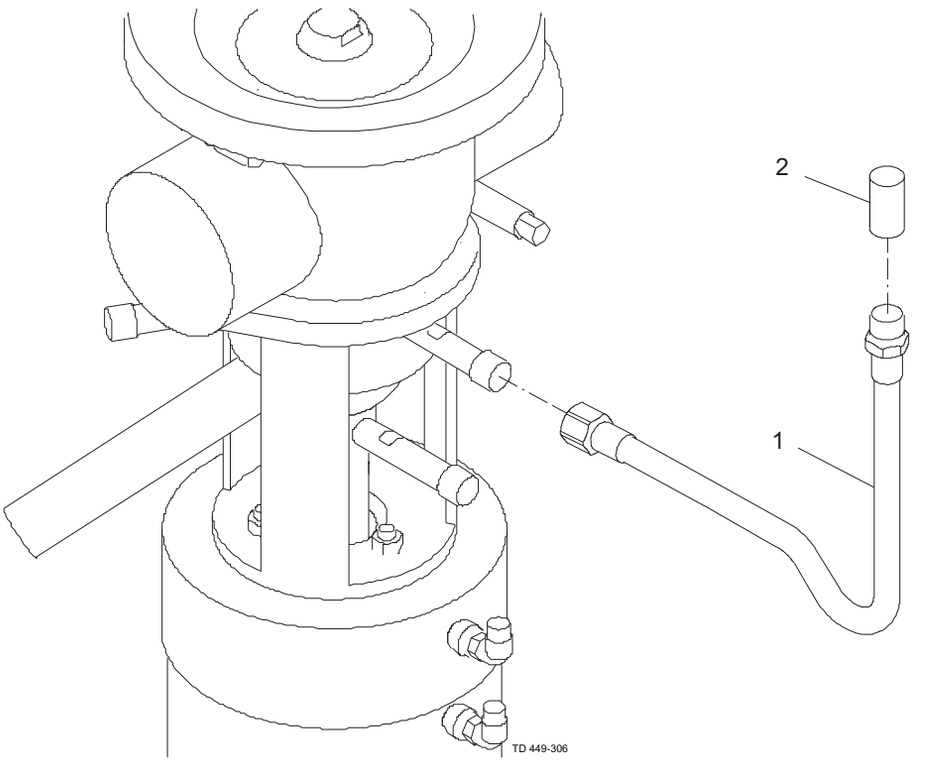

Pos	Qty	Denomination	
1	1	Hose PTFE with stainless steel weave	3135707451
2	1	Welding socket	9611990917

900-324

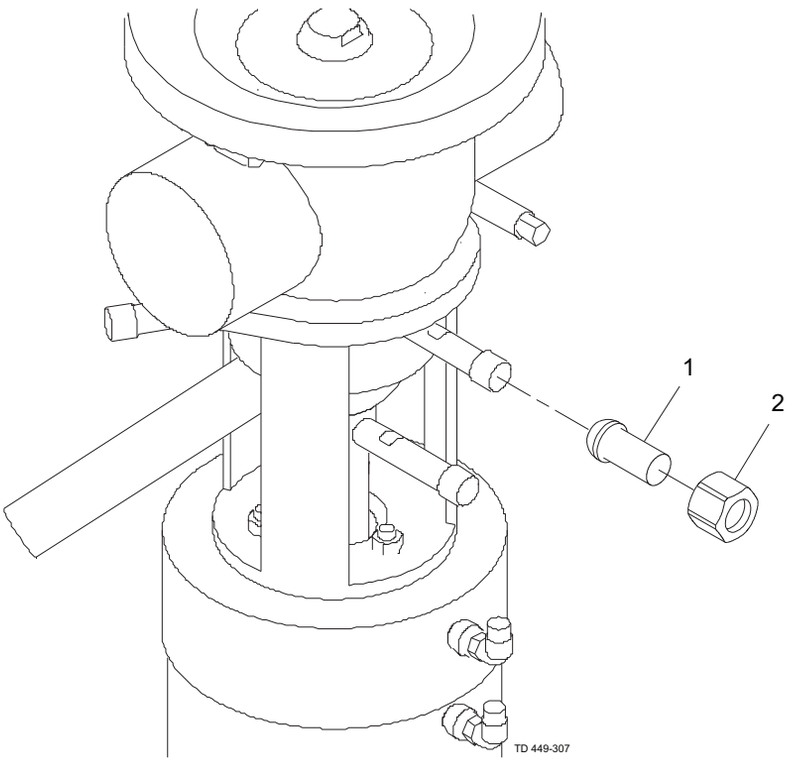
1
2
TD 449-307

Pos	Qty	Denomination	
1	1	Welding liner	3135707431
2	1	Nut	3135707441

900-325/1

1.7

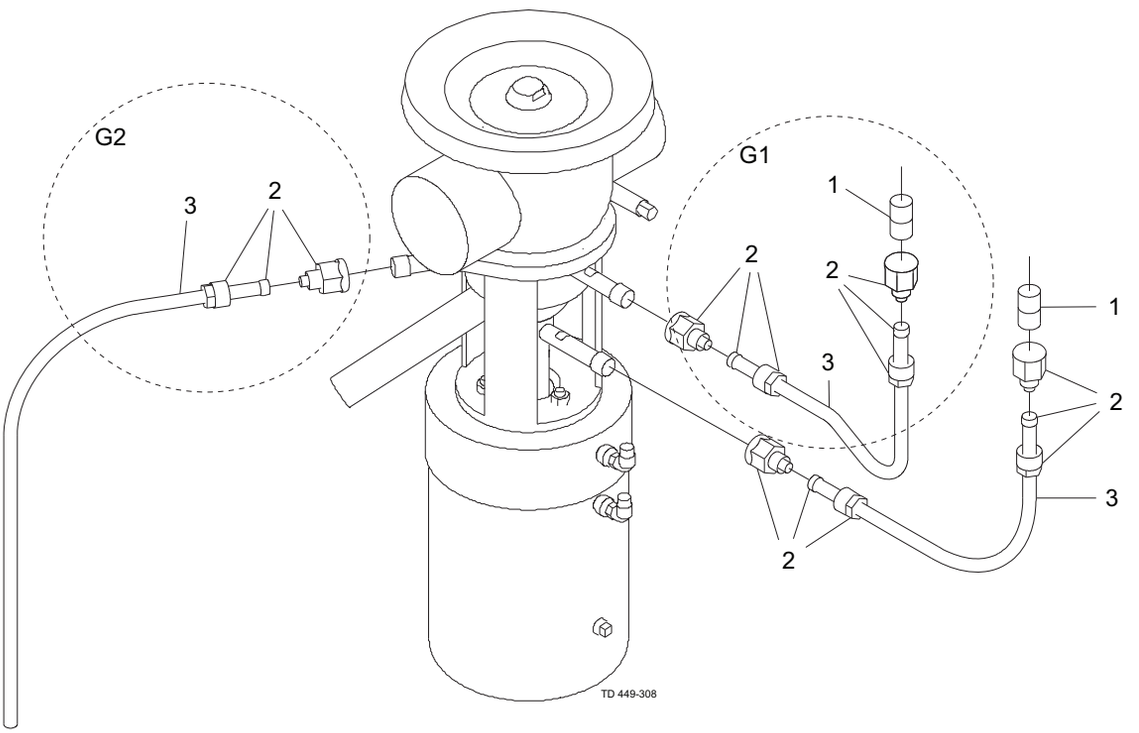

Installation kit G1

Pos	Qty	Denomination	
1	1	Welding male part, AISI 316	3135707471
2	2	3/8" 10 mm Female PVDF	9611992372
3	1	10 mm PVDF hose, 1m	9611992607

Installation kit G2

Pos	Qty	Denomination	
2	1	3/8" 10 mm Female PVDF	9611992372
3	1	10 mm PVDF hose, 1m	9611992607

900-329

1.7

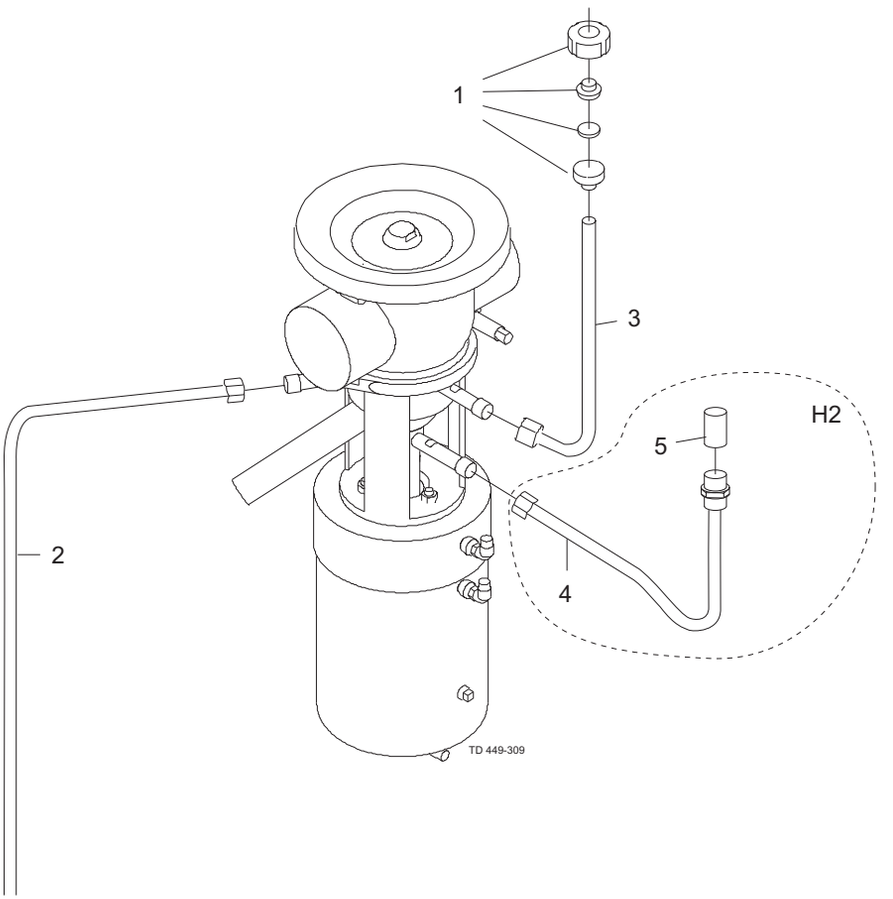

Installation kit H

Pos	Qty	Denomination	
1	1	DIN union DN10	9611305791
	1	Nut, DN10	9611306420
	1	Welding liner DIN, DN10	9611305950
	1	Packing NBR, DN10	52734601
	1	Male part DIN, DN10	9611305900
2	1	12 mm CIP pipe long	3135710014
3	1	12 mm CIP pipe	3135710013

Installation kit H2

Pos	Qty	Denomination	
4	1	Hose PTFE with stainless steel weave	3135707451
5	1	Welding socket	9611990917

900-326

1.7

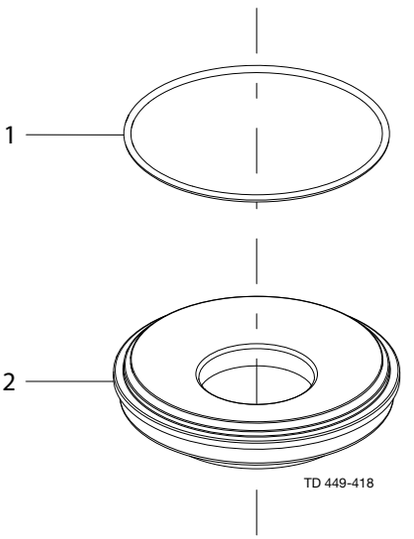

Pos	Qty	Denomination	DN/OD 51 DN 50	DN/OD 63.5 DN 65 DN/OD 76.1 DN 80	DN/OD 101.6 DN 100
1	1	O-ring, EPDM	9611991056	9611991056	9611991056
	1	O-ring, NBR	9611990007	9611990007	9611990007
	1	O-ring, FPM	9611992883	9611992883	9611992883
2	1	Conversion flange	9613444501	9613444601	9613444701

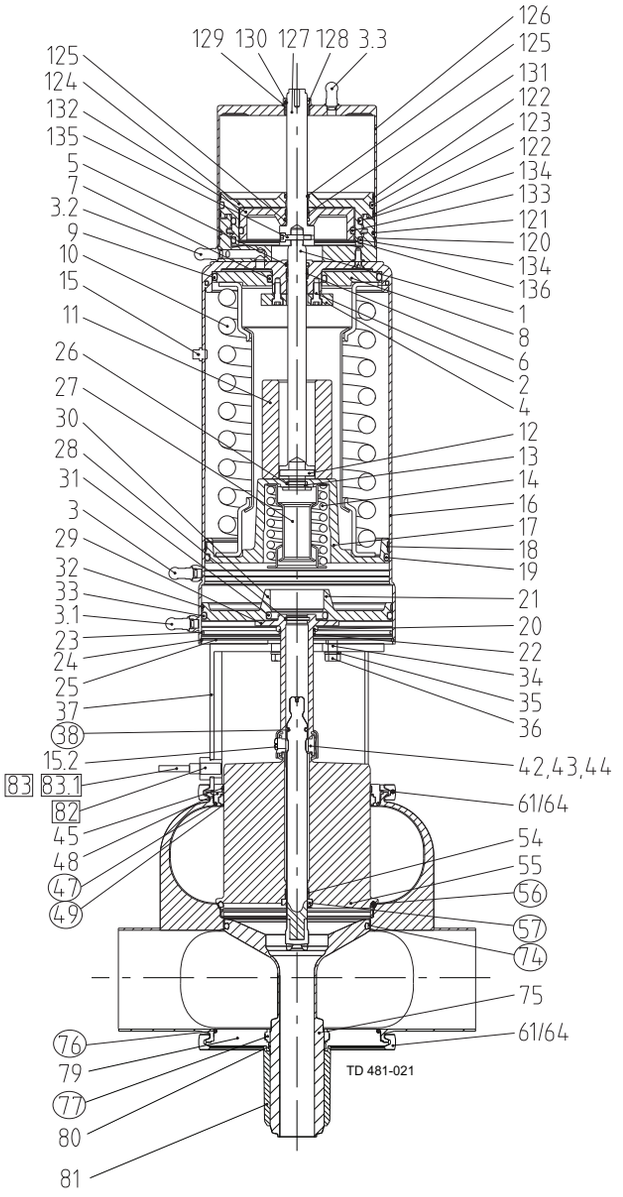

4”

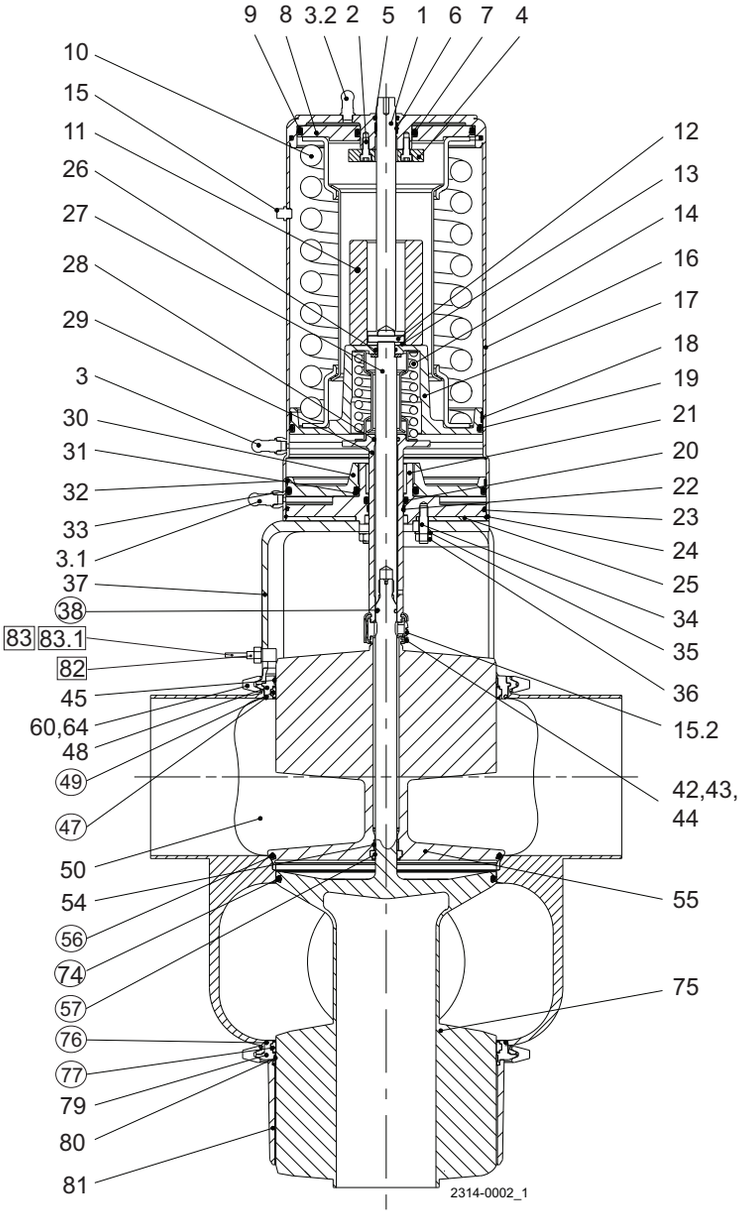

6”

= Sensor kit

= Wear parts

Pos	Qty	Denomination	4” Seat ø143.9	6” Seat ø206.1
38	1	O-ring, EPDM	9611993572	9611993572
47	1	O-ring, EPDM (Standard)	9611993644	9611995003
	1	O-ring, NBR	9611993645	9611995004
	1	O-ring, HNBR	9611993647	9611995006
	1	O-ring, FPM	9611993646	9611995005
49	1	Lip seal, EPDM (Standard)	9613008536	9613008560
	1	Lip seal, NBR	9613008537	9613008561
	1	Lip seal, HNBR	9613008539	9613008563
	1	Lip seal, FPM	9613008538	9613008562
56	1	Seal ring, EPDM (Standard)	9613095123	9613095151
	1	Seal ring, NBR	9613095124	9613095152
	1	Seal ring, HNBR	9613095121	9613095149
	1	Seal ring, FPM	9613095122	9613095150
57	1	Lip seal, EPDM (Standard)	9613008711	9613008711
	1	Lip seal, NBR	9613008712	9613008712
	1	Lip seal, HNBR	9613008714	9613008714
	1	Lip seal, FPM	9613008713	9613008713
74	1	Seal ring, EPDM (Standard)	9613095223	9613095247
	1	Seal ring, NBR	9613095224	9613095248
	1	Seal ring, HNBR	9613095221	9613095245
	1	Seal ring, FPM - Alfa Laval recommends EPDM	9613095222	9613095246
76	1	O-ring, EPDM (Standard)	9611993644	9611995003
	1	O-ring, NBR	9611993645	9611995004
	1	O-ring, HNBR	9611993647	9611995006
	1	O-ring, FPM	9611993646	9611995005
77	1	Lip seal, EPDM (Standard)	9613008521	9613008560
	1	Lip seal, NBR	9613008522	9613008561
	1	Lip seal, HNBR	9613008524	9613008563
	1	Lip seal, FPM	9613008523	9613008562

NOTE! All FPM service kits are supplied with EPDM seal ring, pos. 74.

1.7

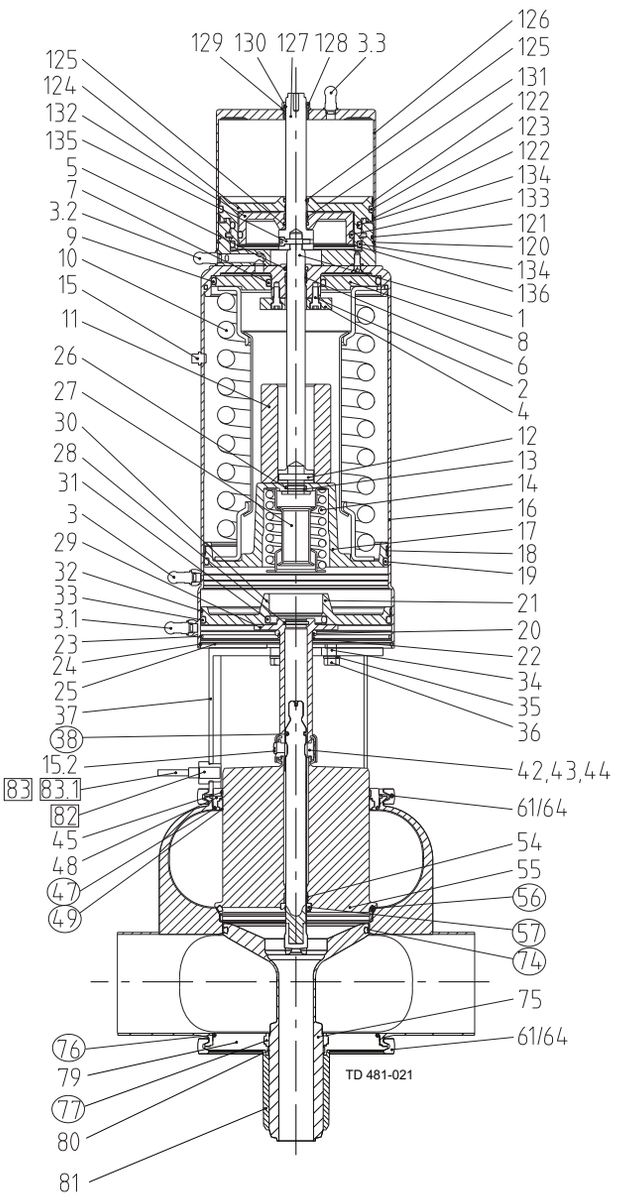

4”

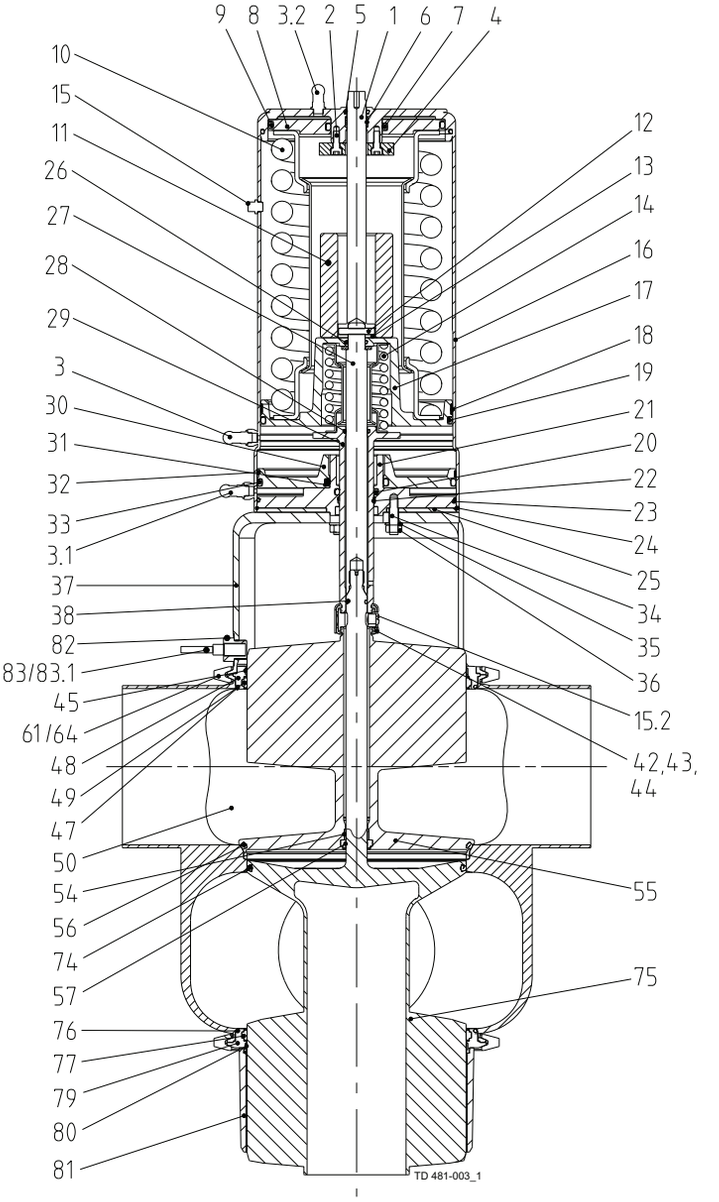

6”

□ = Sensor kit

○ = Wear parts

Pos	Qty	Denomination	4” Seat ø143.9	6” Seat ø206.1
38	1	O-ring, EPDM	9611993572	9611993572
47	1	O-ring, EPDM (standard)	9611993644	9611995003
	1	O-ring, NBR	9611993645	9611995004
	1	O-ring, HNBR	9611993647	9611995006
	1	O-ring, FPM	9611993646	9611995005
49	1	Lip seal, EPDM (standard)	9613008536	9613008560
	1	Lip seal, NBR	9613008537	9613008561
	1	Lip seal, HNBR	9613008539	9613008563
	1	Lip seal, FPM	9613008538	9613008562
56	1	Seal ring, EPDM (standard)	9613095123	9613095151
	1	Seal ring, NBR	9613095124	9613095152
	1	Seal ring, HNBR	9613095121	9613095149
	1	Seal ring, FPM	9613095122	9613095150
57	1	Lip seal, EPDM (standard)	9613008711	9613008711
	1	Lip seal, NBR	9613008712	9613008712
	1	Lip seal, HNBR	9613008714	9613008714
	1	Lip seal, FPM	9613008713	9613008713
74	1	Seal ring, EPDM (standard)	9613095223	9613095247
	1	Seal ring, NBR	9613095224	9613095248
	1	Seal ring, HNBR	9613095221	9613095245
	1	Seal ring, FPM - Alfa Laval recommends EPDM	9613095222	9613095246
76	1	O-ring, EPDM (standard)	9611993644	9611995003
	1	O-ring, NBR	9611993645	9611995004
	1	O-ring, HNBR	9611993647	9611995006
	1	O-ring, FPM	9611993646	9611995005
77	1	Lip seal, EPDM (standard)	9613008521	9613008560
	1	Lip seal, NBR	9613008522	9613008561
	1	Lip seal, HNBR	9613008524	9613008563
	1	Lip seal, FPM	9613008523	9613008562

1.7

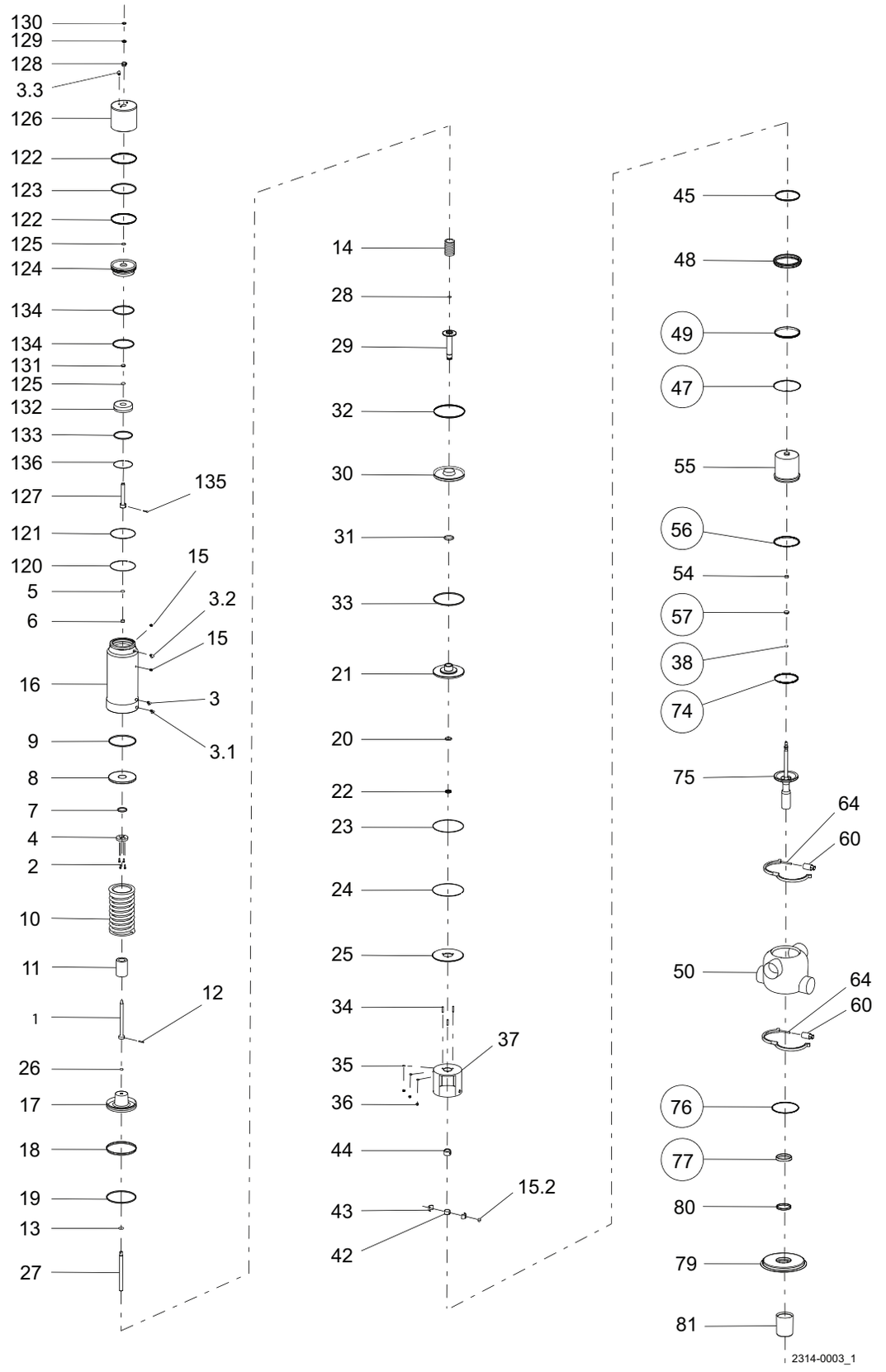

○ = Wear parts

Pos		Qty	Denomination	4" Seat ø143.9
			Cpl. Actuator	9614031316
1		1	Upper stem	9614072401
2		4	Screw	9611990144
3		1	Air fitting	9611991988
3.1		1	Air fitting	9611991988
3.2		1	Air fitting	9611991988
3.3		1	Air fitting	9611991988
4		1	Stop for upper piston	9613488301
5	•	1	O-ring, NBR	9611993499
6	•	1	Guide ring, Turcite	9613008408
7	•	1	O-ring, NBR	9611993514
8		1	Upper piston	9613005602
9	•	1	O-ring, NBR	9611993513
10		1	Spring assembly	9613025605
11		1	Distance spacer	9613010207
12		1	Pin	9611994199
13		1	Washer	9611993596
14		1	Spring assembly	9613009503
15		3	Plug	9613414101
16		1	Cylinder	9613015025
17		1	Main piston	9613015901
18	•	1	Guide ring, Turcite	9613008411
19	•	1	O-ring, NBR	9611993509
20	•	1	O-ring, NBR	9611993607
21		1	Bottom	9613016801
22	•	1	Guide ring, Turcite	9613008404
23	•	1	O-ring, NBR	22340675
24		1	Retaining ring	9613024804
25		1	Cover disk	9613005804
26		1	O-ring, NBR	9611993530
27		1	Inner stem	9613007305
28	•	1	O-ring	9611990030
29		1	Piston rod	9613006004
30		1	Lower piston	9613016601
31	•	1	O-ring, NBR	42153
32	•	1	Guide ring, Turcite	9613008407
33	•	1	O-ring, NBR	9611993510
34		3	Bolt	9611993618
35		3	Washer	9611993594
36		3	Nut	9611990360
42		1	Spindle liner	9613009001
43		2	Clamp	9613009201
44		1	Lock	9613009101
45		1	Guide ring, PTFE	9613008421
48		1	Upper sealing element	9613071301
54		1	Guide ring, PTFE	9613008402
55		1	Upper plug	9613498301
60		2	Hexnut	9613023201
64		2	Clamp without nut	9613021801
75		1	Lower plug	9613497901
79		1	Lower sealing element	9613082704
80		1	Guide ring, PTFE	9613008413
81		1	Cover for Plug	9613049027
120		1	Lock ring	9613143203
121	•	1	O-ring, NBR	9611992579
122	•	2	Guide ring	9613008428
123	•	1	O-ring, NBR	9611994283
124		1	Piston	9614072201
125	•	2	O-ring, NBR	9611994300
126		1	Cylinder	9614058303
127		1	Upper stem, cpl.	9614072301
128	•	1	Bushing	9613132801
129	•	1	O-ring	9611994680
130	•	1	O-ring	9611994300
131	•	1	Guide ring, Turcite	9613008424
132		1	Inner piston	9614072501
133	•	1	O-ring	9611990033
134	•	2	O-ring	9611990035
135		1	Screw	9611995302
136		1	Lock ring	9614072601

TD 900-633/4

		4" Seat ø143.9
•	**Actuator service kit**	**9611926990**

Parts marked with • are included in the service kit.

1.7

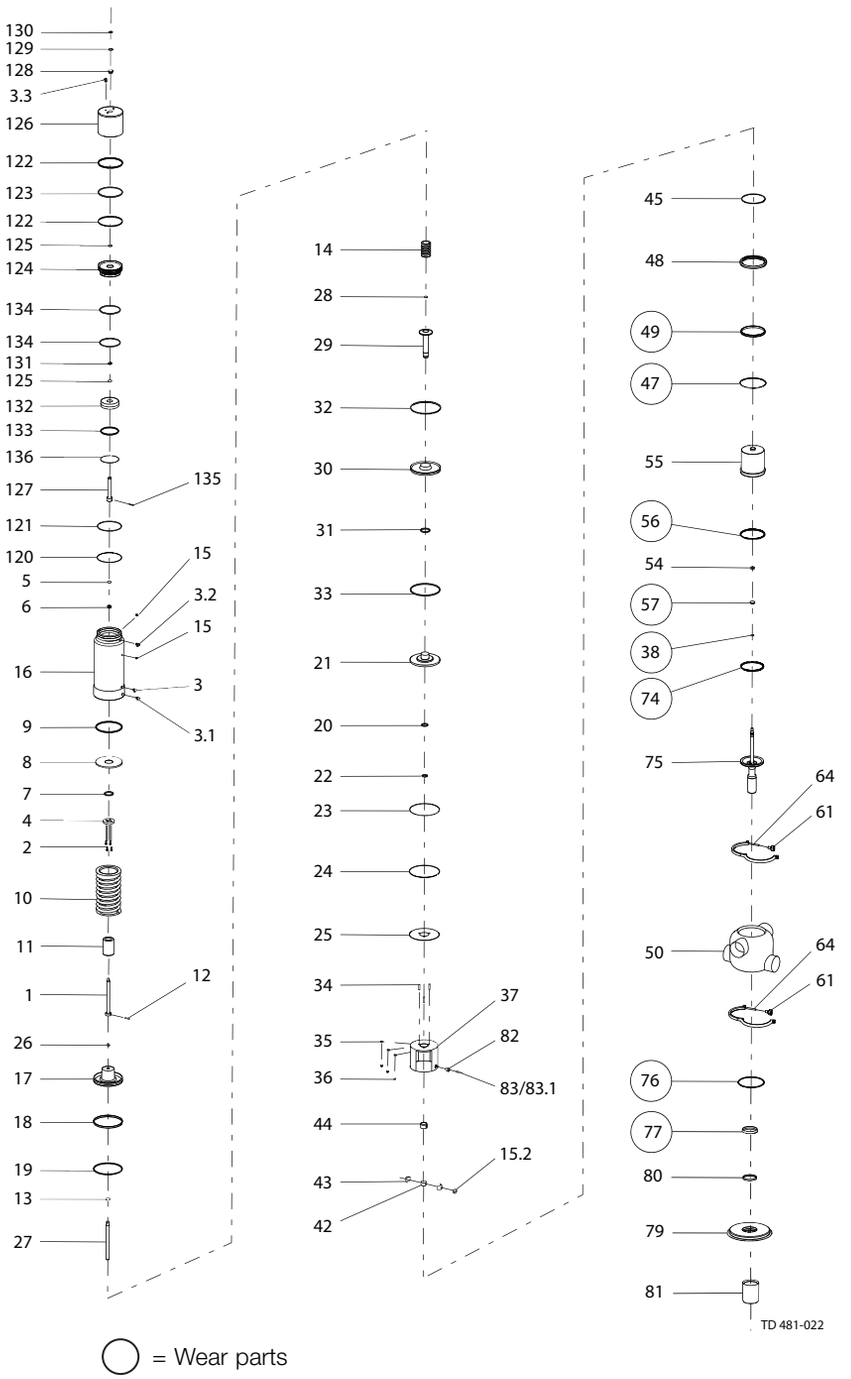
130
129
128
3.3
126
122
123
122
125
124
134
134
131
125
132
133
136
127
135
121
120
15
5
3.2
6
15
16
3
3.1
9
8
7
4
2
10
11
12
1
26
17
18
19
13
27
14
28
29
32
30
31
33
21
20
22
23
24
25
34
37
35
82
36
83/83.1
44
15.2
43
42
45
48
49
47
55
56
54
57
38
74
75
64
61
50
64
61
76
77
80
79
81
TD 481-022
= Wear parts

Pos		Qty	Denomination	4" Seat ø143.9
			Cpl. Actuator	9613489036
1		1	Upper stem	9614072401
2		4	Screw	9611990144
3		1	Kit, air fitting and label, (blue, ThinkTop)	9611926026
		1	Kit, air fitting and label, (white, Thinktop V-Series)	8010000754
3.1		1	Kit, air fitting and label, (red, ThinkTop)	9611926028
		1	Kit, air fitting and label, (blue, Thinktop V-Series)	9611926026
3.2		1	Kit, air fitting and label, (yellow)	9611926027
3.3		1	Kit, air fitting and label, (blue, ThinkTop)	9611926026
		1	Kit, air fitting and label, (white, Thinktop V-Series)	8010000754
4		1	Stop for upper piston	9613488301
5	•	1	O-ring, NBR	9611993499
6	•	1	Guide ring, Turcite	9613008408
7	•	1	O-ring, NBR	9611993514
8		1	Upper piston	9613005602
9	•	1	O-ring, NBR	9611993513
10		1	Spring assembly	9613025605
11		1	Distance spacer	9613010207
12		1	Pin	9611994199
13		1	Washer	9611993596
14		1	Spring assembly	9613009503
15		3	Plug	9613414101
16		1	Cylinder (3A marking)	9614053704
17		1	Main piston	9613015901
18	•	1	Guide ring, Turcite	9613008411
19	•	1	O-ring, NBR	9611993509
20	•	1	O-ring, NBR	9611993607
21		1	Bottom	9613016801
22	•	1	Guide ring, Turcite	9613008404
23	•	1	O-ring, NBR	22340675
24		1	Retaining ring	9613024804
25	•	1	Cover disk	9613005804
26		1	O-ring, NBR	9611993530
27		1	Inner stem	9613007305
28	•	1	O-ring	9611990030
29		1	Piston rod	9613006004
30		1	Lower piston	9613016601
31	•	1	O-ring, NBR	42153
32	•	1	Guide ring, Turcite	9613008407
33	•	1	O-ring, NBR	9611993510
34		3	Bolt	9611993618
35		3	Washer	9611993594
36		3	Nut	9611990360
42		1	Spindle liner	9613009001
43		2	Clamp	9613009201
44		1	Lock	9613009101
45		1	Guide ring, PTFE	9613008421
48		1	Upper sealing element	9613071301
54		1	Guide ring, PTFE	9613008402
55		1	Upper plug	9613498301
61		2	Wingnut	9612558001
64		2	Clamp without nut	9613021801
75		1	Lower plug	9613497901
79		1	Lower sealing element	9613082704
80		1	Guide ring, PTFE	9613008413
81		1	Cover for Plug	9613049027
82	Δ	1	Bolt for indication	9613092604
83	Δ	1	Sensor for indication	9611995770
83.1		1	Cable for sensor for indication	9611994915

• Actuator service kit, part no. 9611926990

1.7

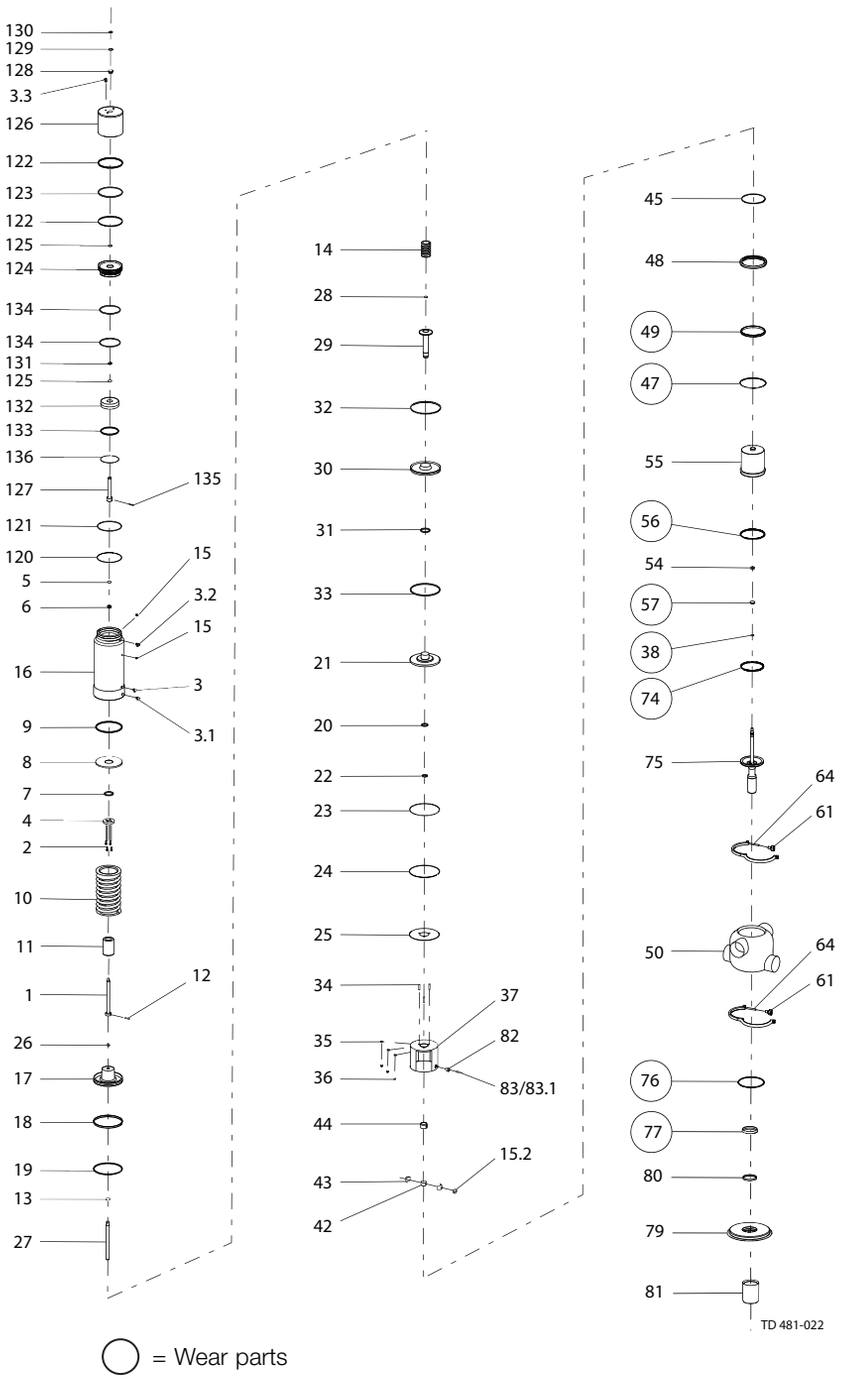
130
129
128
3.3
126
122
123
122
125
124
134
134
131
125
132
133
136
127
121
120
5
6
16
9
8
7
4
2
10
11
1
26
17
18
19
13
27
135
15
3.2
15
3
3.1
12
14
28
29
32
30
31
33
21
20
22
23
24
25
34
35
36
44
43
42
37
82
83/83.1
15.2
45
48
49
47
55
56
54
57
38
74
75
64
61
50
64
61
76
77
80
79
81
TD 481-022
= Wear parts

Pos	Qty	Denomination	4" Seat ø143.9
120	1	Lock ring	9613143203
121 ●	1	O-ring, NBR	9611992579
122 ●	2	Guide ring	9613008428
123 ●	1	O-ring, NBR	9611994283
124	1	Piston	9614072201
125 ●	2	O-ring, NBR	9611994300
126	1	Cylinder	9614058302
127	1	Upper stem, cpl.	9614072301
128 ●	1	Bushing	9613132801
129 ●	1	O-ring	9611994680
130 ●	1	O-ring	9611994300
131 ●	1	Guide ring	9613008424
132	1	Inner piston	9614072501
133 ●	1	O-ring	9611990033
134 ●	2	O-ring	9611990035
135	1	Screw	9611995302
136	1	Lock ring	9614072601

Note!

Δ Sensor service kit for valves delivered prior to October 2015 - 9611928352

900-575/6

1.7

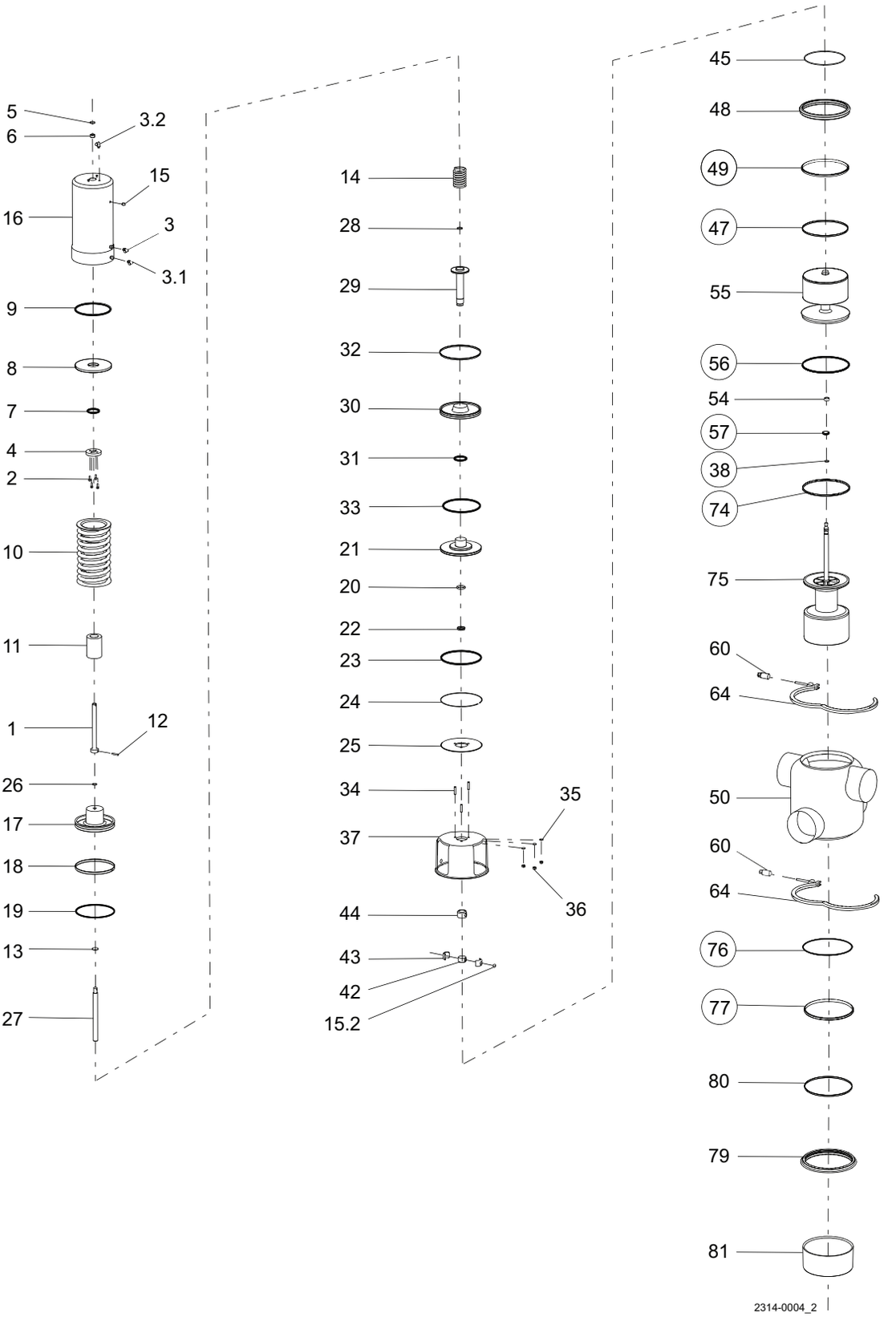

◯ = Wear parts

Pos		Qty	Denomination	6” Seat ø206.1
			Cpl. Actuator	9614031312
1		1	Upper stem	9613007404
2		4	Screw	9611990144
3		1	Air fitting	9611991988
3.1		1	Air fitting	9611991988
3.2		1	Air fitting	9611991988
4		1	Stop for upper piston	9613488301
5	•	1	O-ring, NBR	9611993499
6	•	1	Guide ring, Turcite	9613008408
7	•	1	O-ring, NBR	9611993514
8		1	Upper piston	9613005602
9	•	1	O-ring, NBR	9611993513
10		1	Spring assembly	9613025605
11		1	Distance spacer	9613010207
12		1	Pin	9611994199
13		1	Washer	9611993596
14		1	Spring assembly	9613009503
15		2	Plug	9613414101
16		1	Cylinder	9613015036
17		1	Main piston	9613015901
18	•	1	Guide ring, Turcite	9613008411
19	•	1	O-ring, NBR	9611993509
20	•	1	O-ring, NBR	9611993607
21		1	Bottom	9613016801
22	•	1	Guide ring, Turcite	9613008404
23	•	1	O-ring, NBR	22340675
24		1	Retaining ring	9613024804
25		1	Cover disk	9613005804
26		1	O-ring, NBR	9611993530
27		1	Inner stem	9613007305
28	•	1	O-ring	9611990030
29		1	Piston rod	9613006004
30		1	Lower piston	9613016601
31	•	1	O-ring, NBR	42153
32	•	1	Guide ring, Turcite	9613008407
33	•	1	O-ring, NBR	9611993510
34		3	Bolt	9611993618
35		3	Washer	9611993594
36		3	Nut	9611990360
42		1	Spindle liner	9613009001
43		2	Clamp	9613009201
44		1	Lock	9613009101
45		1	Guide ring, PTFE	9613008421
48		1	Upper sealing element	9613488001
54		1	Guide ring, PTFE	9613008402
55		1	Upper plug	9613488901
60		2	Hexnut	9613146001
64		2	Clamp without nut	9613488401
75		1	Lower plug	9613497801
79		1	Lower sealing element	9613489101
80		1	Guide ring, PTFE	9613008426
81		1	Cover for Plug	9613049025

		6” Seat ø206.1
•	**Actuator service kit**	**9611926416**

Parts marked with • are included in the service kit.

1.7

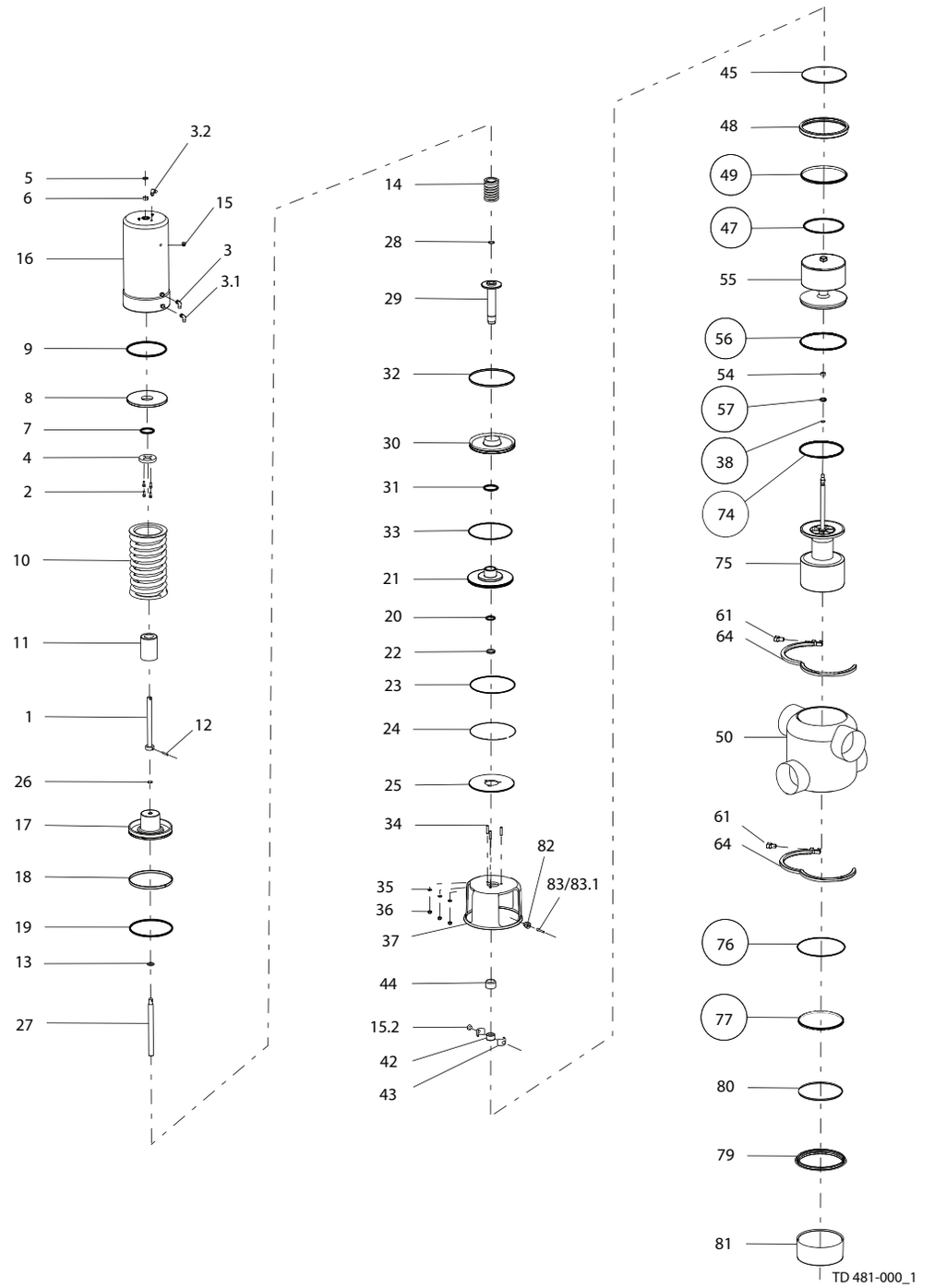

◯ = Wear parts

Pos		Qty	Denomination	6” Seat ø206.1
			Cpl. Actuator	9613489032
1		1	Upper stem	9613007404
2		4	Screw	9611990144
3		1	Kit, air fitting and label, (blue, ThinkTop)	9611926026
		1	Kit, air fitting and label, (white, Thinktop V-Series)	8010000754
3.1		1	Kit, air fitting and label, (red, ThinkTop)	9611926028
		1	Kit, air fitting and label, (blue, Thinktop V-Series)	9611926026
3.2		1	Kit, air fitting and label, (yellow)	9611926027
4		1	Stop for upper piston	9613488301
5	•	1	O-ring, NBR	9611993499
6	•	1	Guide ring, Turcite	9613008408
7	•	1	O-ring, NBR	9611993514
8		1	Upper piston	9613005602
9	•	1	O-ring, NBR	9611993513
10		1	Spring assembly	9613025605
11		1	Distance spacer	9613010207
12		1	Pin	9611994199
13		1	Washer	9611993596
14		1	Spring assembly	9613009503
15		2	Plug	9613414101
16		1	Cylinder (3A marking)	9613015037
17		1	Main piston	9613015901
18	•	1	Guide ring, Turcite	9613008411
19	•	1	O-ring, NBR	9611993509
20	•	1	O-ring, NBR	9611993607
21		1	Bottom	9613016801
22	•	1	Guide ring, Turcite	9613008404
23	•	1	O-ring, NBR	22340675
24		1	Retaining ring	9613024804
25		1	Cover disk	9613005804
26		1	O-ring, NBR	9611993530
27		1	Inner stem	9613007305
28	•	1	O-ring	9611990030
29		1	Piston rod	9613006004
30		1	Lower piston	9613016601
31	•	1	O-ring, NBR	42153
32	•	1	Guide ring, Turcite	9613008407
33	•	1	O-ring, NBR	9611993510
34		3	Bolt	9611993618
35		3	Washer	9611993594
36		3	Nut	9611990360
42		1	Spindle liner	9613009001
43		2	Clamp	9613009201
44		1	Lock	9613009101

• Actuator service kit, part no. 9611926416

Pos		Qty	Denomination	
45		1	Guide ring, PTFE	9613008426
48		1	Upper sealing element	9613488001
54		1	Guide ring, PTFE	9613008402
55		1	Upper plug	9613488901
61		2	Wing nut	9613149501
64		2	Clamp without nut	9613488401
75		1	Lower plug	9613497801
79		1	Lower sealing element	9613489101
80		1	Guide ring, PTFE	9613008426
81		1	Cover for Plug	9613049025
82	Δ	1	Bolt for indication	9613092604
83	Δ	1	Sensor for indication	9611995770
83.1		1	Cable for sensor for indication	9611994915

Note!

Δ Sensor service kit for valves delivered prior to October 2015 - 9611928352

1.7

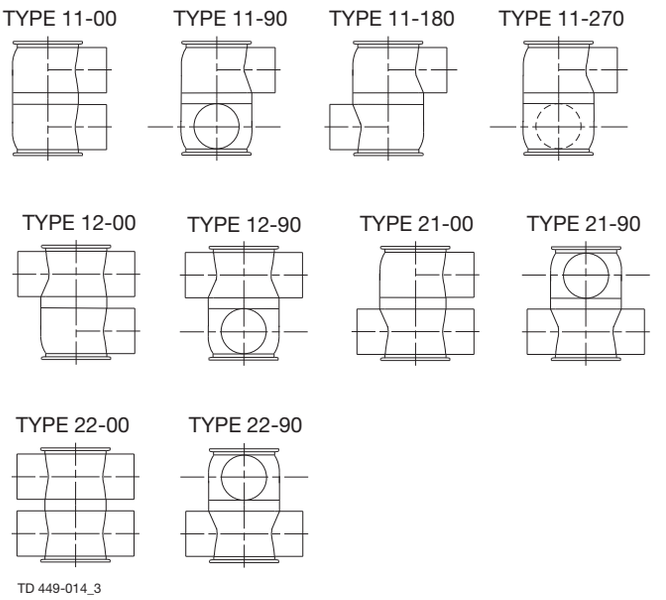

Service kits

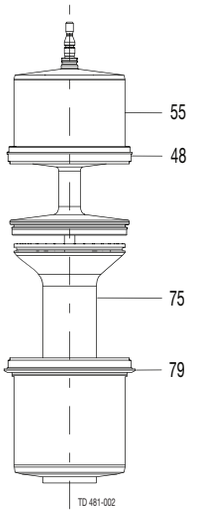

Pos	Qty	Denomination	4” Seat ø143.9	6” Seat ø206.1
37	1	Intermediate piece	9613019319	9613496601
50	1	Valve body, 11-00	9614196601	9614196611
	1	Valve body, 12-00	9614196605	9614196615
	1	Valve body, 21-00	9614196607	9614196617
	1	Valve body, 22-00	9614196609	9614196619
	1	Valve body, 11-90	9614196602	9614196612
	1	Valve body, 12-90	9614196606	9614196616
	1	Valve body, 21-90	9614196608	9614196618
	1	Valve body, 22-90	9614196610	9614196620
	1	Valve body, 11-180	9614196603	9614196613
	1	Valve body, 11-270	9614196604	9614196614

		4”	6”
□	**Service kit, NBR**	**9611926861**	**9611926849**
□	**Service kit, EPDM**	**9611926862**	**9611926850**
□	**Service kit, HNBR**	**9611926863**	**9611926851**
□	**Service kit, FPM**	**9611926864**	**9611926852**

NOTE!
All FPM service kits are supplied with EPDM seal ring, pos. 74.

1.7

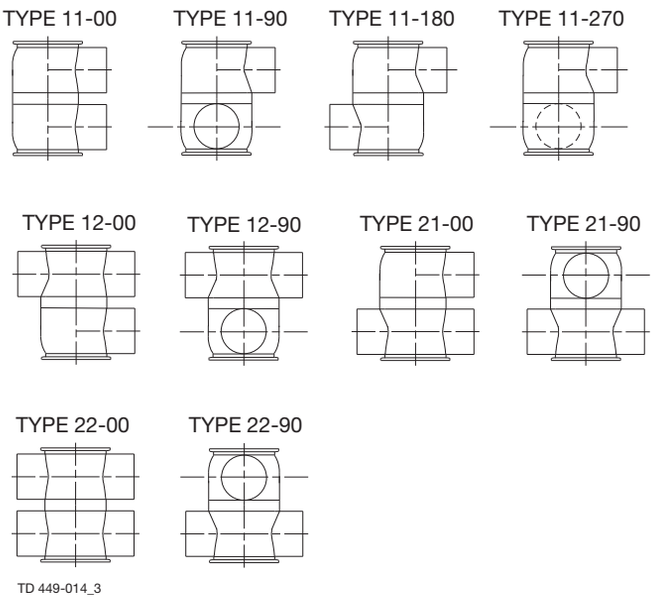

Service kits

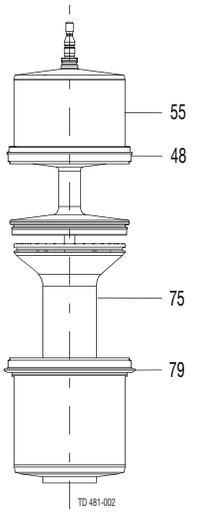

Pos	Qty	Denomination	4” Seat ø143.9	6” Seat ø206.1
37	1	Intermediate piece	9613019319	9613496601
50	1	Valve body, 11-00	9613493301	9613492001
	1	Valve body, 12-00	9613493305	9613492005
	1	Valve body, 21-00	9613493307	9613492007
	1	Valve body, 22-00	9613493309	9613492009
	1	Valve body, 11-90	9613493302	9613492002
	1	Valve body, 12-90	9613493306	9613492006
	1	Valve body, 21-90	9613493308	9613492008
	1	Valve body, 22-90	9613493310	9613492010
	1	Valve body, 11-180	9613493303	9613492003
	1	Valve body, 11-270	9613493304	9613492004

Service Kits

4"		
Service kit, NBR		9611926861
Service kit, EPDM		9611926862
Service kit, HNBR		9611926863
Service kit, FPM		9611926864
6"		
Service kit, NBR		9611926849
Service kit, EPDM		9611926850
Service kit, HNBR		9611926851
Service kit, FPM		9611926852

NOTE!
All FPM service kits are supplied with EPDM seal ring, pos. 74.

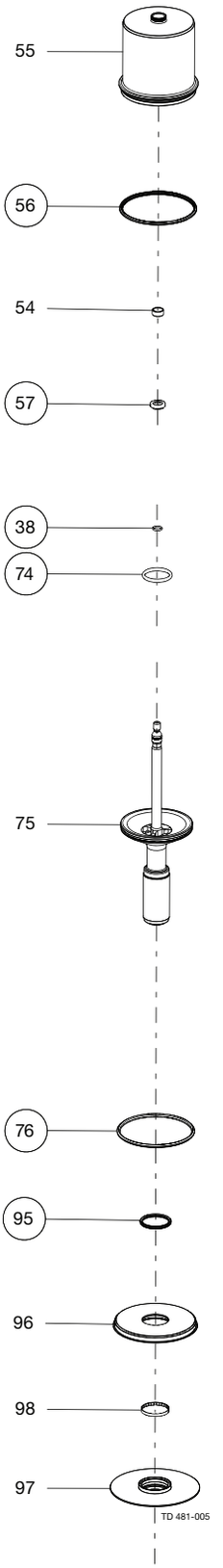
55
56
54
57
38
74
75
76
95
96
98
97
TD 481-005

Pos	Qty	Denomination	4” Seat ø143.9	6” Seat ø206.1
		Lower plug, cpl., NBR	9614057401	9614057402
		Lower plug, cpl., EPDM	9614057403	9614057404
		Lower plug, cpl., HNBR	9614057405	9614057406
		Lower plug, cpl., FPM	9614057407	9614057408

Pos	Qty	Denomination
38	1	O-ring
74	1	Seal ring
75	1	Lower plug
76	1	O-ring
95	1	Special lip seal
96	1	Lower sealing element, upper part
97	1	Lower sealing element, lower part
98	1	Guide ring

1.7

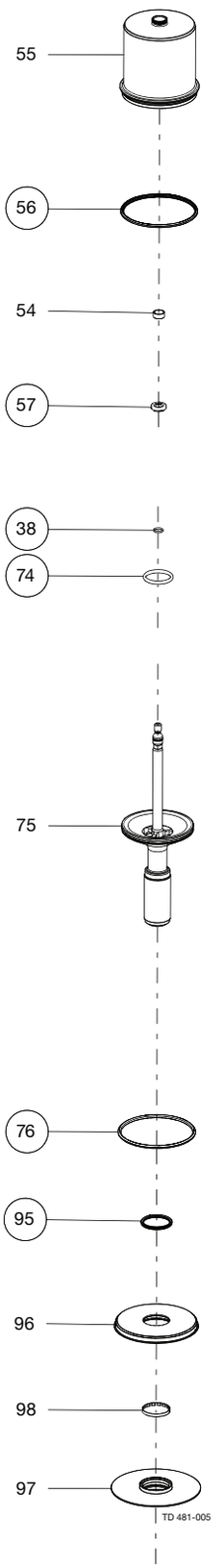

Pos	Qty	Denomination	4" Seat ø143.9	6" Seat ø206.1
		Lower plug, cpl., NBR	9614057401	9614057402
		Lower plug, cpl., EPDM	9614057403	9614057404
		Lower plug, cpl., HNBR	9614057405	9614057406
		Lower plug, cpl., FPM	9614057407	9614057408

Pos	Qty	Denomination
38	1	O-ring
74	1	Seal ring
75	1	Lower plug
76	1	O-ring
95	1	Special lip seal
96	1	Lower sealing element, upper part
97	1	Lower sealing element, lower part
98	1	Guide ring

1.7

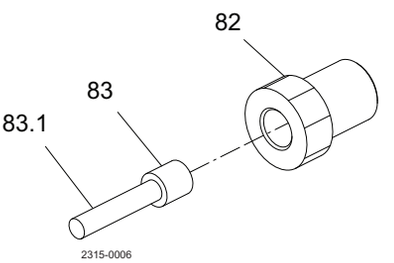

Pos	Qty	Denomination	4”-6”
82	1	Bolt for indication	9613092601
83	1	Sensor for indication	9611994916
83,1	1	Cable for sensor for indication	9611994915

900-640

1.7

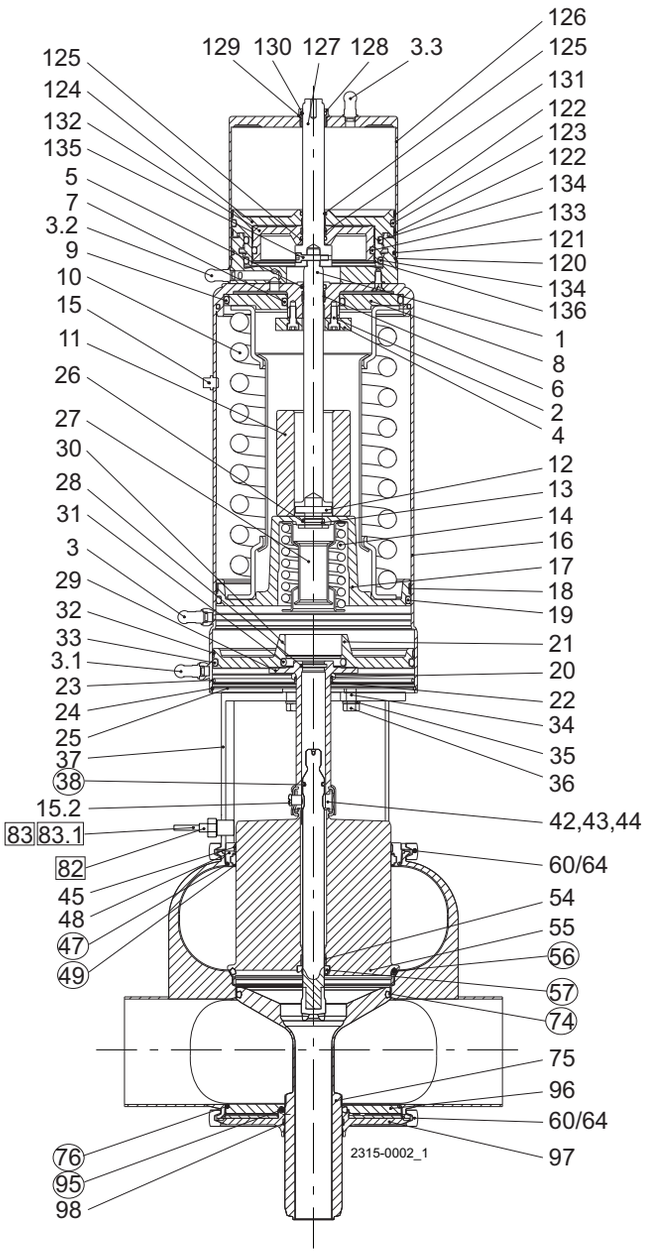

4”

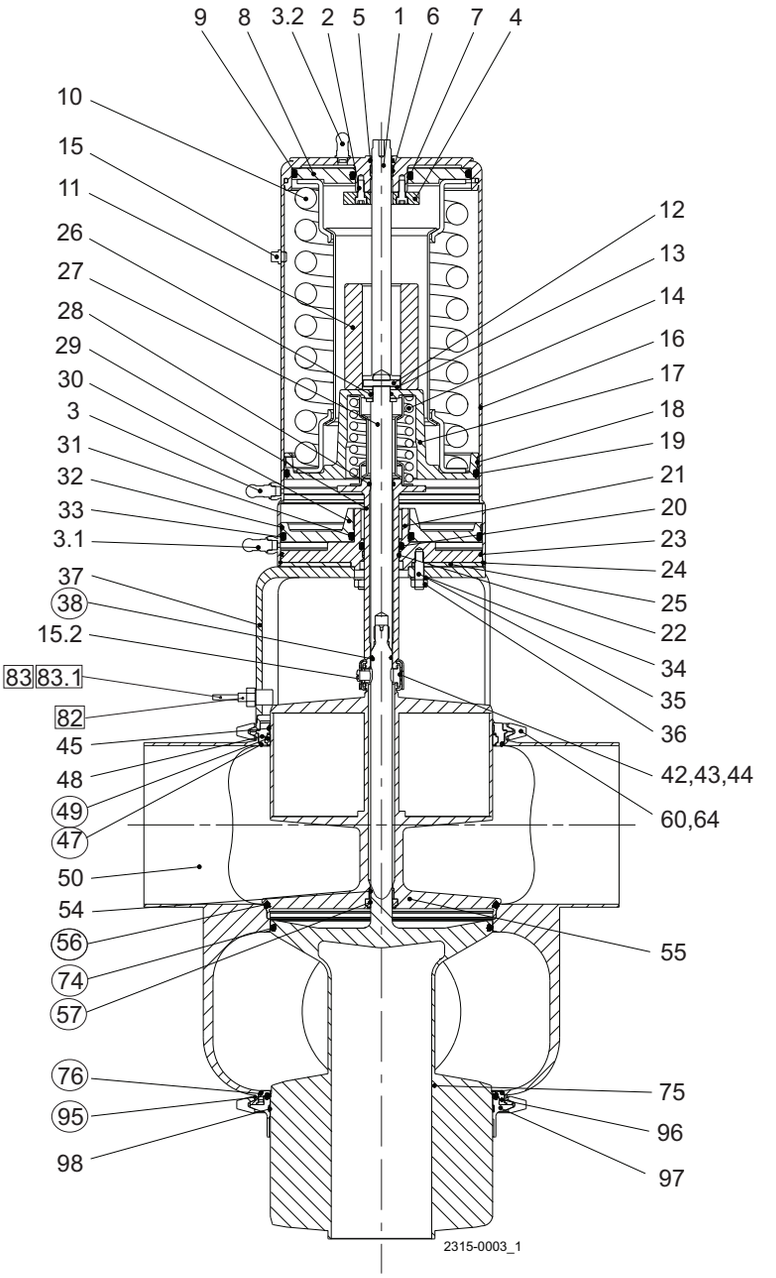

6”

= sensor kit

= wear parts

Pos	Qty	Denomination	4” Seat ø143.9	6" Seat ø206.1
38	1	O-ring, EPDM	9611993572	9611993572
47	1	O-ring, EPDM (Standard)	9611993644	9611995003
	1	O-ring, NBR	9611993645	9611995004
	1	O-ring, HNBR	9611993647	9611995006
	1	O-ring, , FPM	9611993646	9611995005
49	1	Lip seal, , EPDM (Standard)	9613008536	9613008560
	1	Lip seal, , NBR	9613008537	9613008561
	1	Lip seal, HNBR	9613008539	9613008563
	1	Lip seal, FPM	9613008538	9613008562
56	1	Seal ring, EPDM (Standard)	9613095123	9613095151
	1	Seal ring, NBR	9613095124	9613095152
	1	Seal ring, HNBR	9613095121	9613095149
	1	Seal ring, FPM	9613095122	9613095150
57	1	Lip seal, EPDM (Standard)	9613008711	9613008711
	1	Lip seal, NBR	9613008712	9613008712
	1	Lip seal, HNBR	9613008714	9613008714
	1	Lip seal, FPM	9613008713	9613008713
74	1	Seal ring, EPDM (Standard)	9613095223	9613095247
	1	Seal ring, NBR	9613095224	9613095248
	1	Seal ring, HNBR	9613095221	9613095245
	1	Seal ring, FPM - Alfa Laval recommends EPDM	9613095222	9613095246
76	1	O-ring, EPDM (Standard)	9611993644	9611995003
	1	O-ring, NBR	9611993645	9611995004
	1	O-ring, HNBR	9611993647	9611995006
	1	O-ring, FPM	9611993646	9611995005
95	1	Special lip seal, EPDM (Standard)	9613464215	9613464247
	1	Special lip seal, NBR	9613464216	9613464248
	1	Special lip seal, HNBR	9613464213	9613464245
	1	Special lip seal, FPM	9613464214	9613464246

NOTE! All FPM service kits are supplied with EPDM seal ring, pos. 74.

1.7

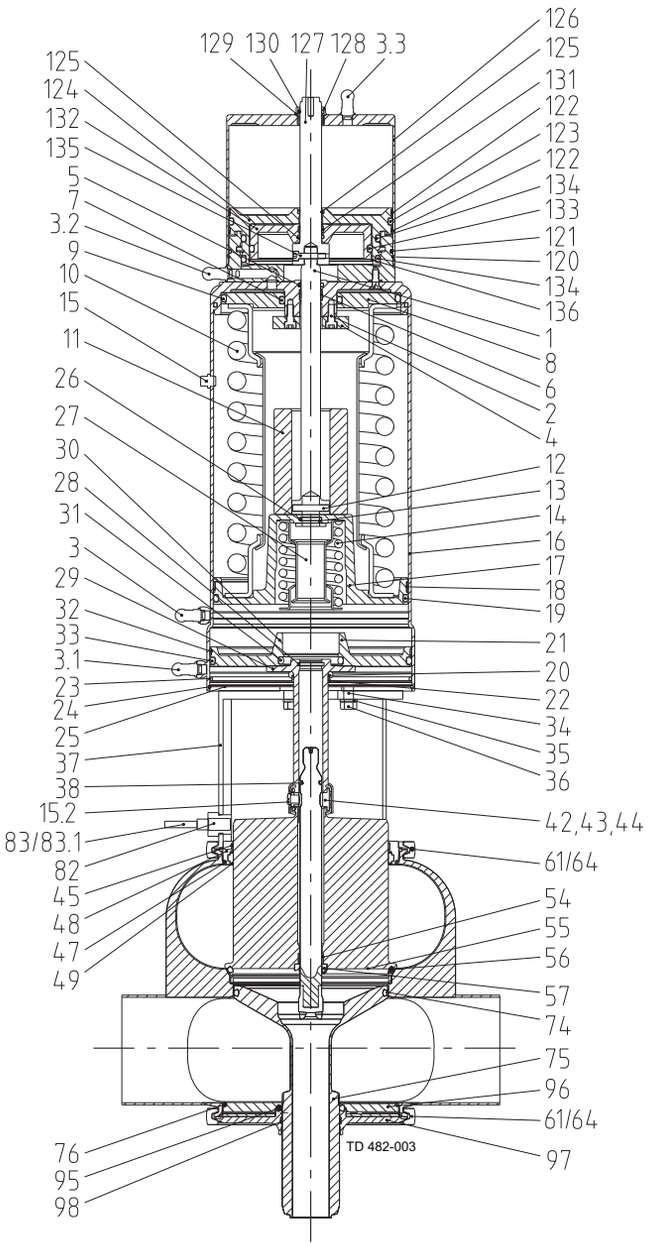
129 130 127 128 3.3
125
124
132
135
5
7
3.2
9
10
15
11
26
27
30
28
31
3
29
32
33
3.1
23
24
25
37
38
15.2
83/83.1
82
45
48
47
49
126
125
131
122
123
122
134
133
121
120
134
136
1
8
6
2
4
12
13
14
16
17
18
19
21
20
22
34
35
36
42,43,44
61/64
54
55
56
57
74
75
96
61/64
97
76
95
98
TD 482-003

4”

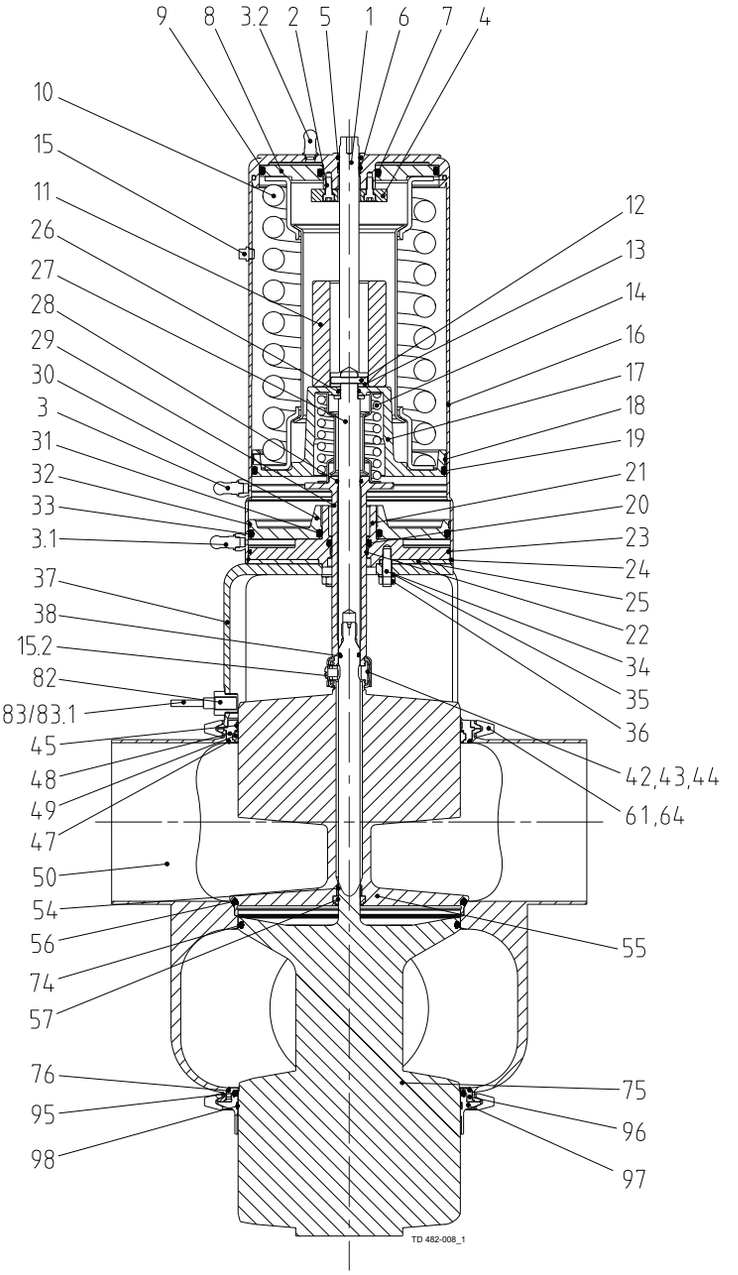
9 8 3.2 2 5 1 6 7 4
10
15
11
26
27
28
29
30
3
31
32
33
3.1
37
38
15.2
82
83/83.1
45
48
49
47
50
54
56
74
57
76
95
98
12
13
14
16
17
18
19
21
20
23
24
25
22
34
35
36
42,43,44
61,64
55
75
96
97
TD 482-008_1

6”

Pos	Qty	Denomination	4" Seat ø143.9	6" Seat ø206.1
38	1	O-ring, EPDM	9611993572	9611993572
47	1	O-ring, EPDM (Standard)	9611993644	9611995003
	1	O-ring, NBR	9611993645	9611995004
	1	O-ring, HNBR	9611993647	9611995006
	1	O-ring, FPM	9611993646	9611995005
49	1	Lip seal, EPDM (Standard)	9613008536	9613008560
	1	Lip seal, NBR	9613008537	9613008561
	1	Lip seal, HNBR	9613008539	9613008563
	1	Lip seal, FPM	9613008538	9613008562
56	1	Seal ring, EPDM (Standard)	9613095123	9613095151
	1	Seal ring, NBR	9613095124	9613095152
	1	Seal ring, HNBR	9613095121	9613095149
	1	Seal ring, FPM	9613095122	9613095150
57	1	Lip seal, EPDM (Standard)	9613008711	9613008711
	1	Lip seal, NBR	9613008712	9613008712
	1	Lip seal, HNBR	9613008714	9613008714
	1	Lip seal, FPM	9613008713	9613008713
74	1	Seal ring, EPDM (Standard)	9613095223	9613095247
	1	Seal ring, NBR	9613095224	9613095248
	1	Seal ring, HNBR	9613095221	9613095245
	1	Seal ring, FPM - Alfa Laval recommends EPDM	9613095222	9613095246
76	1	O-ring, EPDM (Standard)	9611993644	9611995003
	1	O-ring, NBR	9611993645	9611995004
	1	O-ring, HNBR	9611993647	9611995006
	1	O-ring, FPM	9611993646	9611995005
95	1	Special lip seal , EPDM (standard)	9613464215	9613464247
	1	Special lip seal , NBR	9613464216	9613464248
	1	Special lip seal , HNBR	9613464213	9613464245
	1	Special lip seal , FPM	9613464214	9613464246

NOTE!
All FPM service kits are supplied with EPDM seal ring, pos. 74.

1.7

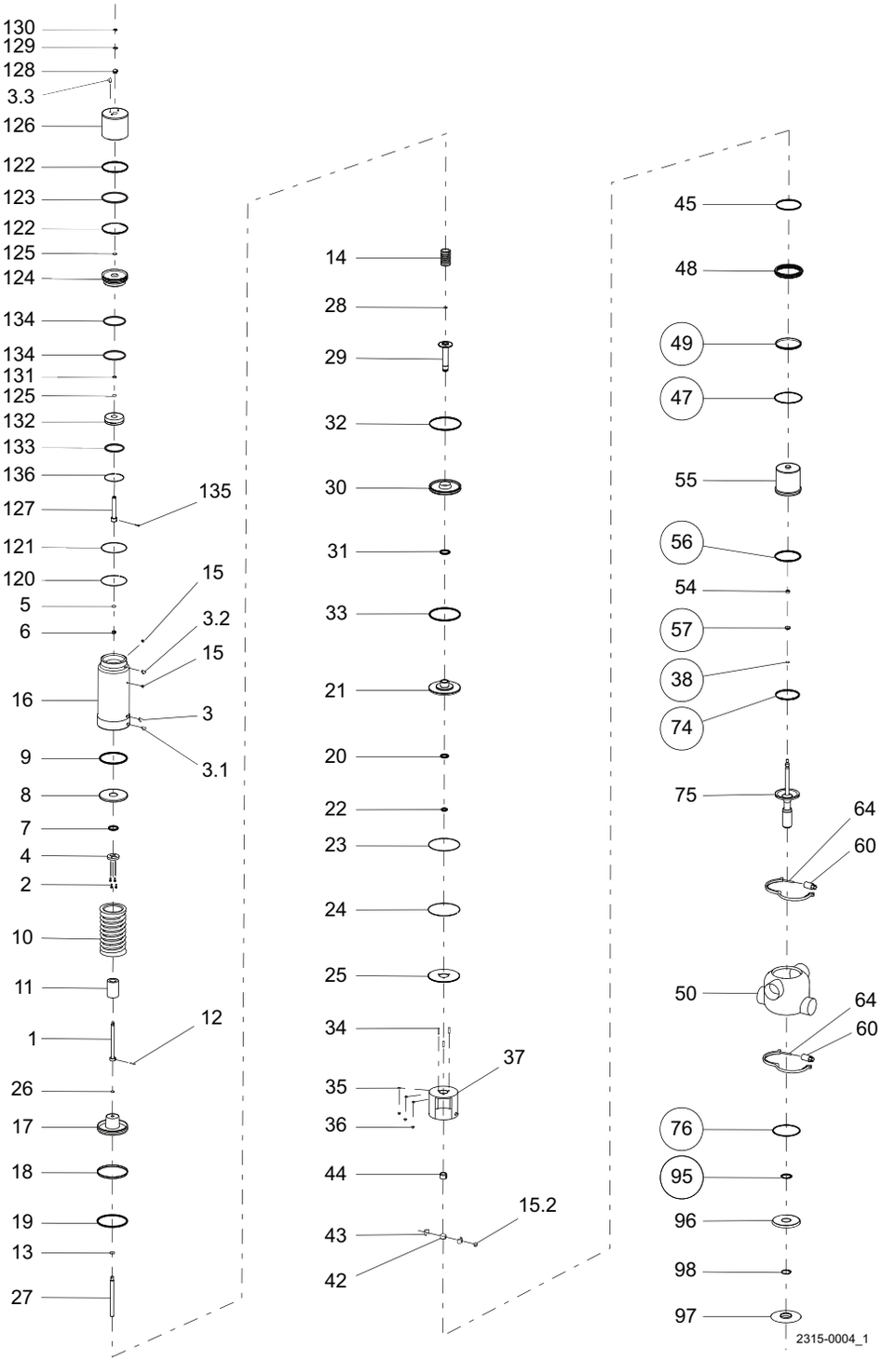

◯ = Wear parts

Pos		Qty	Denomination	4" Seat ø143.9
			Cpl. Actuator	9614031316
1		1	Upper stem	9614072401
2		4	Screw	9611990144
3		1	Air fitting	9611991988
3.1		1	Air fitting	9611991988
3.2		1	Air fitting	9611991988
3.3		1	Air fitting	9611991988
4		1	Stop for upper piston	9613488301
5	•	1	O-ring, NBR	9611993499
6	•	1	Guide ring, Turcite	9613008408
7	•	1	O-ring, NBR	9611993514
8		1	Upper piston	9613005602
9	•	1	O-ring, NBR	9611993513
10		1	Spring assembly	9613025605
11		1	Distance spacer	9613010207
12		1	Pin	9611994199
13		1	Washer	9611993596
14		1	Spring assembly	9613009503
15		3	Plug	9613414101
16		1	Cylinder	9613015025
17		1	Main piston	9613015901
18	•	1	Guide ring, Turcite	9613008411
19	•	1	O-ring, NBR	9611993509
20	•	1	O-ring, NBR	9611993607
21		1	Bottom	9613016801
22	•	1	Guide ring, Turcite	9613008404
23	•	1	O-ring, NBR	22340675
24		1	Retaining ring	9613024804
25		1	Cover disk	9613005804
26		1	O-ring, NBR	9611993530
27		1	Inner stem	9613007305
28	•	1	O-ring	9611990030
29		1	Piston rod	9613006004
30		1	Lower piston	9613016601
31	•	1	O-ring, NBR	42153
32	•	1	Guide ring, Turcite	9613008407
33	•	1	O-ring, NBR	9611993510
34		3	Bolt	9611993618
35		3	Washer	9611993594
36		3	Nut	9611990360
42		1	Spindle liner	9613009001
43		2	Clamp	9613009201
44		1	Lock	9613009101
45		1	Guide ring, PTFE	9613008421
48		1	Upper sealing element	9613071301
54		1	Guide ring, PTFE	9613008402
55		1	Upper plug	9613498301
60		2	Hexnut	9613023201
64		2	Clamp without nut	9613021801
75		1	Lower plug	9613495501
96		1	Lower sealing element, upper part	9613498101
97		1	Lower sealing element, lower part	9613498001
98		1	Guide ring, Turcite	9613466107
120		1	Lock ring	9613143203
121	•	1	O-ring, NBR	9611992579
122	•	2	Guide ring	9613008428
123	•	1	O-ring, NBR	9611994283
124		1	Piston	9614072201
125	•	2	O-ring, NBR	9611994300
126		1	Cylinder	9614058303
127		1	Upper stem, cpl.	9614072301
128	•	1	Bushing	9613132801
129	•	1	O-ring	9611994680
130	•	1	O-ring	9611994300
131	•	1	Guide ring, Turcite	9613008424
132		1	Inner piston	9614072501
133	•	1	O-ring	9611990033
134	•	2	O-ring	9611990035
135		1	Screw	9611995302
136		1	Lock ring	9614072601

TD 900-634/4

		4" Seat ø143.9
•	**Actuator service kit**	**9611926990**

Parts marked with • are included in the service kit.

1.7

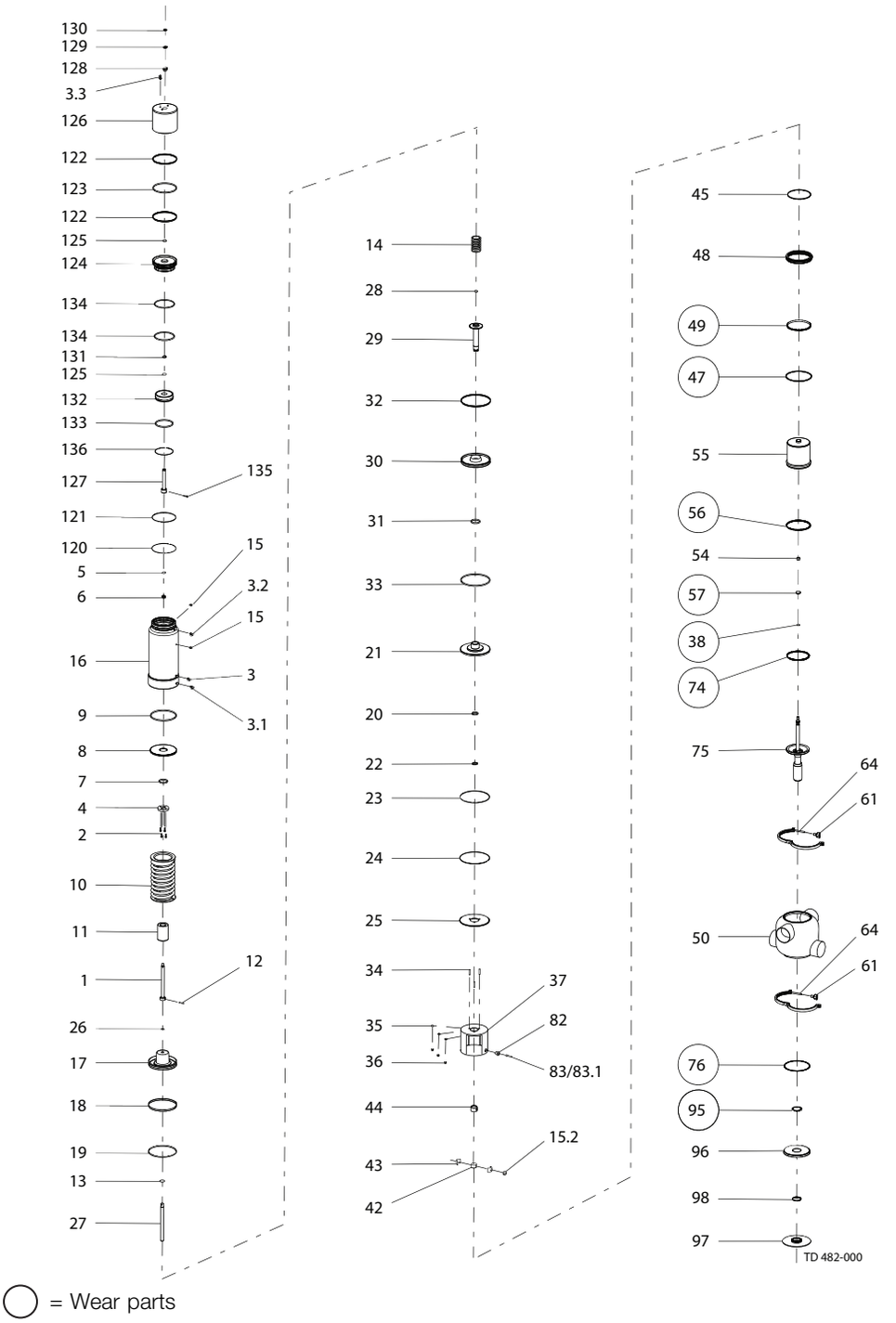
130
129
128
3.3
126
122
123
122
125
124
134
134
131
125
132
133
136
127
135
121
120
15
5
3.2
6
15
16
3
3.1
9
8
7
4
2
10
11
12
1
26
17
18
19
13
27
14
28
29
32
30
31
33
21
20
22
23
24
25
34
37
35
82
36
83/83.1
44
15.2
43
42
45
48
49
47
55
56
54
57
38
74
75
64
61
50
64
61
76
95
96
98
97
TD 482-000
= Wear parts

Pos		Qty	Denomination	4" Seat ø143.9
			Cpl. Actuator	9613489036
1		1	Upper stem	9614072401
2		4	Screw	9611990144
3		1	Kit, air fitting and label, (blue, ThinkTop)	9611926026
		1	Kit, air fitting and label, (white, Thinktop V-Series)	8010000754
3.1		1	Kit, air fitting and label, (red, ThinkTop)	9611926028
		1	Kit, air fitting and label, (blue, Thinktop V-Series)	9611926026
3.2		1	Kit, air fitting and label, (yellow)	9611926027
3.3		1	Kit, air fitting and label, (blue, ThinkTop)	9611926026
		1	Kit, air fitting and label, (white, Thinktop V-Series)	8010000754
4		1	Stop for upper piston	9613488301
5	•	1	O-ring, NBR	9611993499
6	•	1	Guide ring, Turcite	9613008408
7	•	1	O-ring, NBR	9611993514
8		1	Upper piston	9613005602
9	•	1	O-ring, NBR	9611993513
10		1	Spring assembly	9613025605
11		1	Distance spacer	9613010207
12		1	Pin	9611994199
13		1	Washer	9611993596
14		1	Spring assembly	9613009503
15		3	Plug	9613414101
16		1	Cylinder (3A marking)	9614053704
17		1	Main piston	9613015901
18	•	1	Guide ring, Turcite	9613008411
19	•	1	O-ring, NBR	9611993509
20	•	1	O-ring, NBR	9611993607
21		1	Bottom	9613016801
22	•	1	Guide ring, Turcite	9613008404
23	•	1	O-ring, NBR	22340675
24		1	Retaining ring	9613024804
25		1	Cover disk	9613005804
26		1	O-ring, NBR	9611993530
27		1	Inner stem	9613007305
28	•	1	O-ring	9611990030
29		1	Piston rod	9613006004
30		1	Lower piston	9613016601
31	•	1	O-ring, NBR	42153
32	•	1	Guide ring, Turcite	9613008407
33	•	1	O-ring, NBR	9611993510
34		3	Bolt	9611993618
35		3	Washer	9611993594
36		3	Nut	9611990360
42		1	Spindle liner	9613009001
43		2	Clamp	9613009201
44		1	Lock	9613009101

• Actuator service kit, part no. 9611926990

1.7

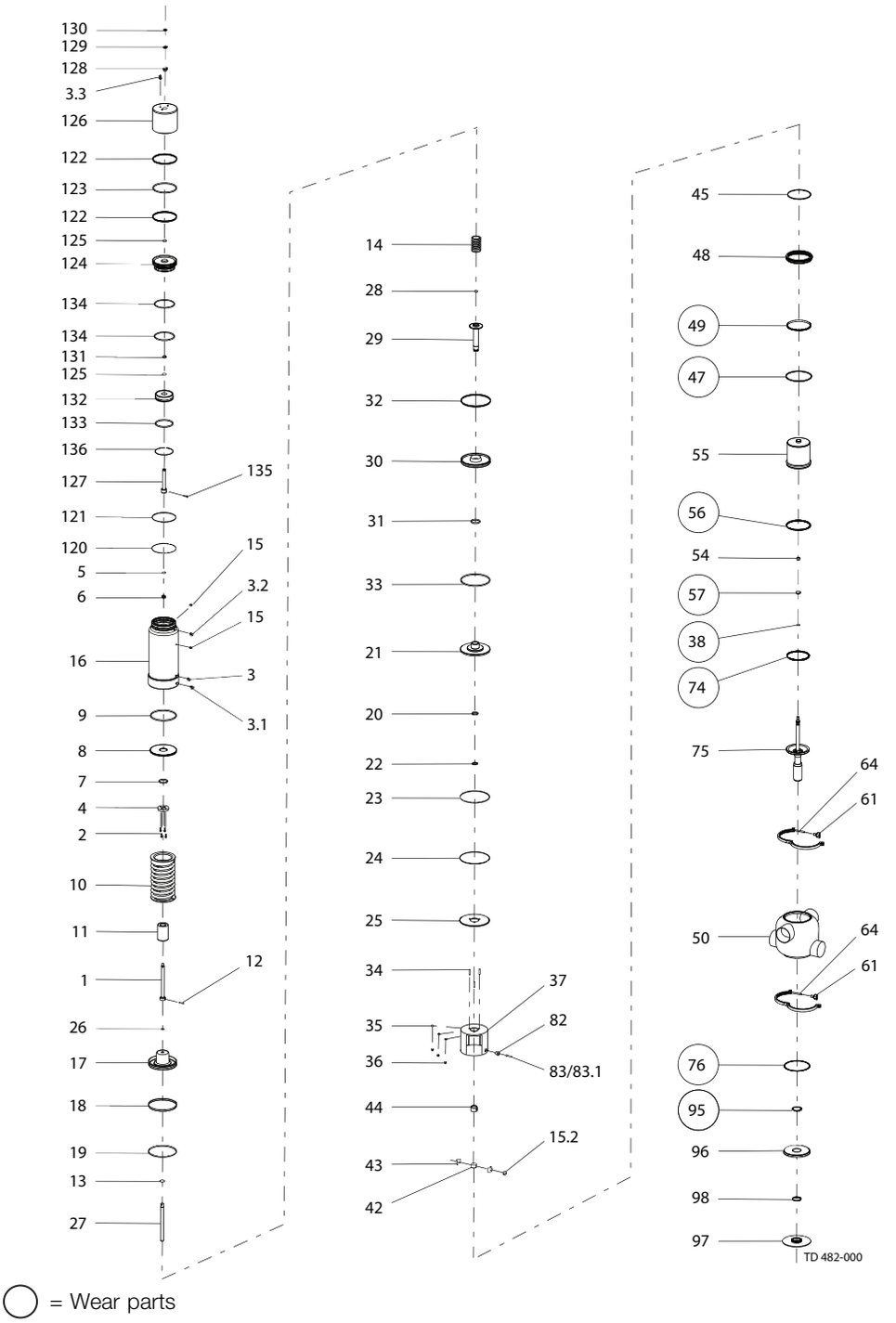
130
129
128
3.3
126
122
123
122
125
124
134
134
131
125
132
133
136
127
135
121
120
15
5
3.2
6
15
16
3
3.1
9
8
7
4
2
10
11
12
1
26
17
18
19
13
27
14
28
29
32
30
31
33
21
20
22
23
24
25
34
37
35
82
36
83/83.1
44
15.2
43
42
45
48
49
47
55
56
54
57
38
74
75
64
61
50
64
61
76
95
96
98
97
TD 482-000
= Wear parts

Pos	Qty	Denomination	4" Seat ø143.9
45	1	Guide ring, PTFE	9613008421
48	1	Upper sealing element	9613071301
54	1	Guide ring, PTFE	9613008402
55	1	Upper plug	9613498301
61	2	Wingnut	9612558001
64	2	Clamp without nut	9613021801
75	1	Lower plug	9613495501
82 Δ	1	Bolt for indication	9613092604
83 Δ	1	Sensor for indication	9611995770
83.1	1	Cable for sensor for indication	9611994915
96	1	Lower sealing element, upper part	9613498101
97	1	Lower sealing element, lower part	9613498001
98	1	Guide ring, Turcite	9613466107
120	1	Lock ring	9613143203
121 ●	1	O-ring, NBR	9611992579
122 ●	2	Guide ring	9613008428
123 ●	1	O-ring, NBR	9611994283
124	1	Piston	9614072201
125 ●	2	O-ring, NBR	9611994300
126	1	Cylinder	9614058302
127	1	Upper stem, cpl.	9614072301
128 ●	1	Bushing	9613132801
129 ●	1	O-ring	9611994680
130 ●	1	O-ring	9611994300
131 ●	1	Guide ring, Turcite	9613008424
132	1	Inner piston	9614072501
133 ●	1	O-ring	9611990033
134 ●	2	O-ring	9611990035
135	1	Screw	9611995302
136	1	Lock ring	9614072601

Note!

Δ Sensor service kit for valves delivered prior to October 2015 - 9611928352

900-584/5

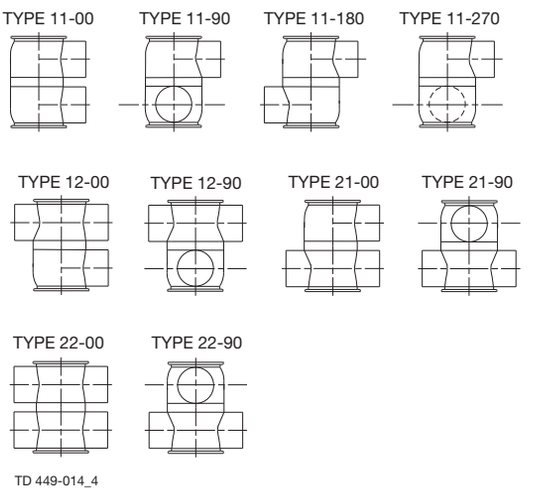
TYPE 11-00
TYPE 11-90
TYPE 11-180
TYPE 11-270
TYPE 12-00
TYPE 12-90
TYPE 21-00
TYPE 21-90
TYPE 22-00
TYPE 22-90
TD 449-014_4

Pos	Qty	Denomination	4" Seat ø143.9
37	1	Intermediate piece	9613019319
50	1	Valve body , 11-00	9613493301
	1	Valve body , 12-00	9613493305
	1	Valve body , 21-00	9613493307
	1	Valve body , 22-00	9613493309
	1	Valve body , 11-90	9613493302
	1	Valve body , 12-90	9613493306
	1	Valve body , 21-90	9613493308
	1	Valve body , 22-90	9613493310
	1	Valve body , 11-180	9613493303
	1	Valve body , 11-270	9613493304

1.7

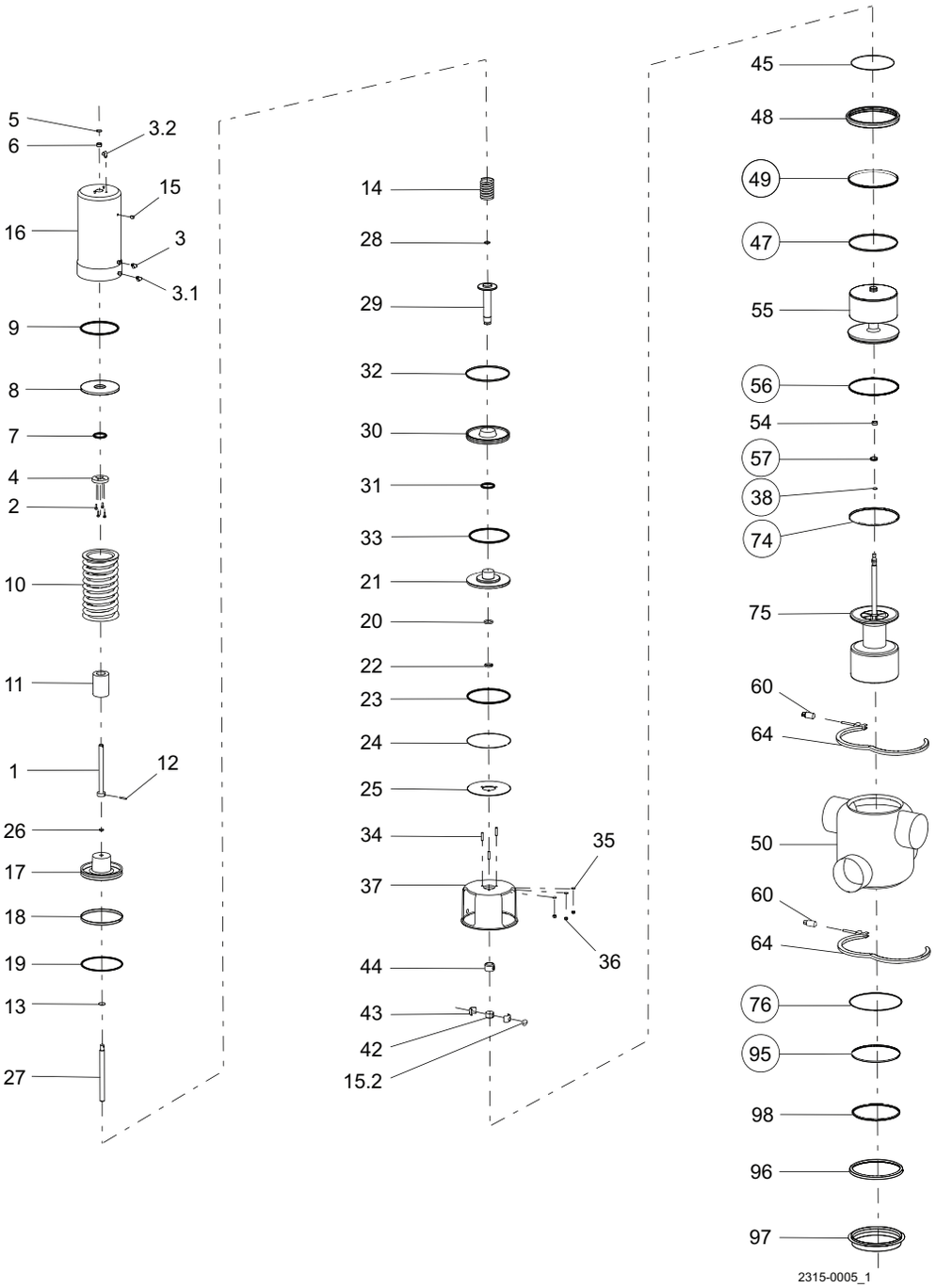

◯ = Wear parts

Pos		Qty	Denomination	6" Seat 206.1
			Cpl. Actuator	9614031312
1		1	Upper stem	9613007404
2		4	Screw	9611990144
3		1	Air fitting	9611991988
3.1		1	Air fitting	9611991988
3.2		1	Air fitting	9611991988
4		1	Stop for upper piston	9613488301
5	•	1	O-ring, NBR	9611993499
6	•	1	Guide ring, Turcite	9613008408
7	•	1	O-ring, NBR	9611993514
8		1	Upper piston	9613005602
9	•	1	O-ring, NBR	9611993513
10		1	Spring assembly	9613025605
11		1	Distance spacer	9613010207
12		1	Pin	9611994199
13		1	Washer	9611993596
14		1	Spring assembly	9613009503
15		2	Plug	9613414101
16		1	Cylinder	9613015036
17		1	Main piston	9613015901
18	•	1	Guide ring, Turcite	9613008411
19	•	1	O-ring, NBR	9611993509
20	•	1	O-ring, NBR	9611993607
21		1	Bottom	9613016801
22	•	1	Guide ring, Turcite	9613008404
23	•	1	O-ring, NBR	22340675
24		1	Retaining ring	9613024804
25		1	Cover disk	9613005804
26		1	O-ring, NBR	9611993530
27		1	Inner stem	9613007305
28	•	1	O-ring	9611990030
29		1	Piston rod	9613006004
30		1	Lower piston	9613016601
31	•	1	O-ring, NBR	42153
32	•	1	Guide ring, Turcite	9613008407
33	•	1	O-ring, NBR	9611993510
34		3	Bolt	9611993618
35		3	Washer	9611993594
36		3	Nut	9611990360
42		1	Spindle liner	9613009001
43		2	Clamp	9613009201
44		1	Lock	9613009101
45		1	Guide ring, PTFE	9613008426
48		1	Upper sealing element	9613488001
54		1	Guide ring, PTFE	9613008402
55		1	Upper plug	9613488901
60		2	Hexnut	9613146001
64		2	Clamp without nut	9613488401
75		1	Lower plug	9613494601
96		1	Lower sealing element, upper part	9613488101
97		1	Lower sealing element, lower part	9613488201
98		1	Guide ring, Turcite	9613466106

		6" Seat 206.1
•	**Actuator service kit**	**9611926416**

Parts marked with • are included in the service kit.

1.7

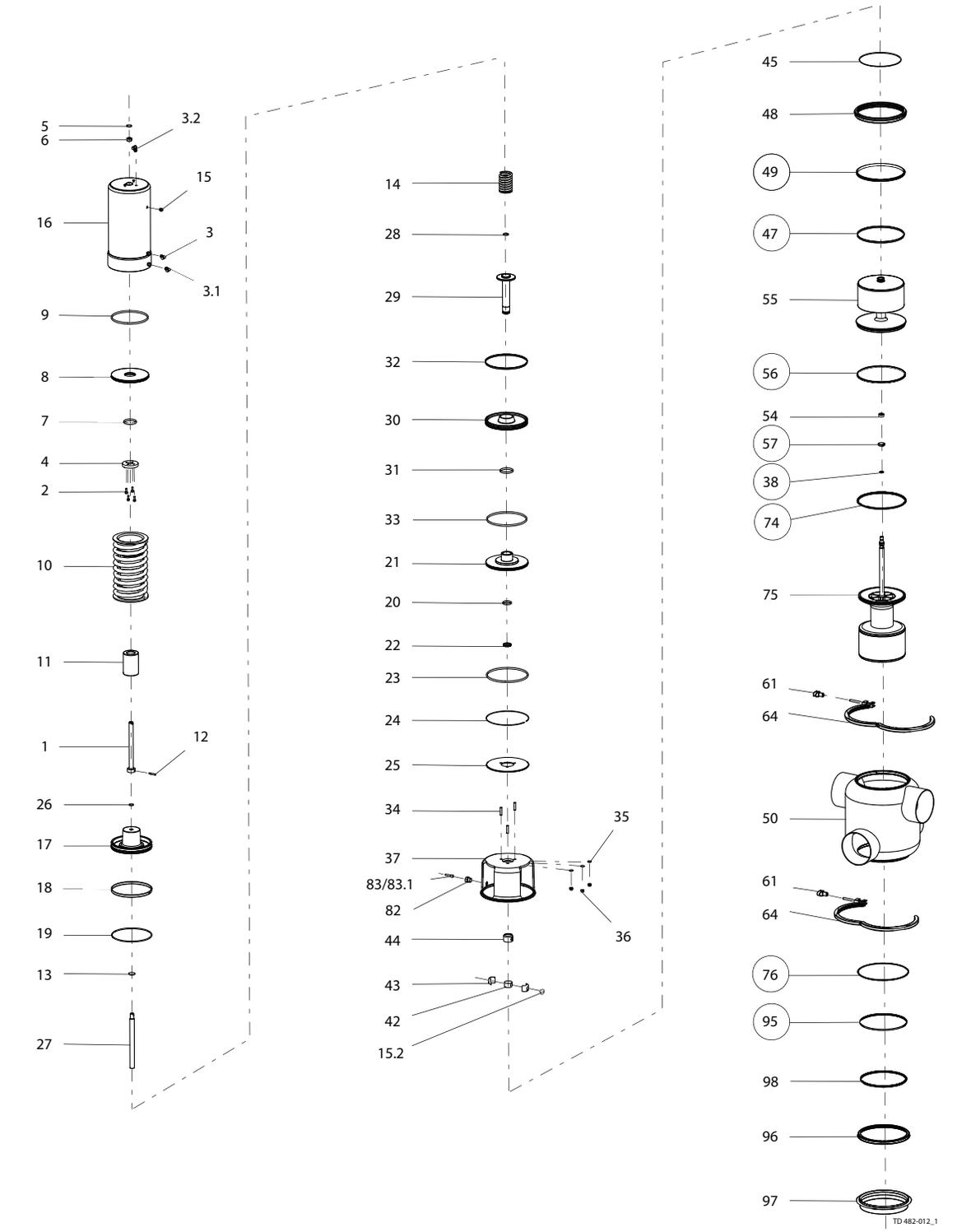

◯ = Wear parts

Pos		Qty	Denomination	6" Seat ø206.1
			Cpl. Actuator	9613489032
1		1	Upper stem	9613007404
2		4	Screw	9611990144
3		1	Kit, air fitting and label, (blue, ThinkTop)	9611926026
		1	Kit, air fitting and label, (white, Thinktop V-Series)	8010000754
3.1		1	Kit, air fitting and label, (red, ThinkTop)	9611926028
		1	Kit, air fitting and label, (blue, Thinktop V-Series)	9611926026
3.2		1	Kit, air fitting and label, (yellow)	9611926027
4		1	Stop for upper piston	9613488301
5	•	1	O-ring, NBR	9611993499
6	•	1	Guide ring, Turcite	9613008408
7	•	1	O-ring, NBR	9611993514
8		1	Upper piston	9613005602
9	•	1	O-ring, NBR	9611993513
10		1	Spring assembly	9613025605
11		1	Distance spacer	9613010207
12		1	Pin	9611994199
13		1	Washer	9611993596
14		1	Spring assembly	9613009503
15		2	Plug	9613414101
16		1	Cylinder (3A marking)	9613015037
17		1	Main piston	9613015901
18	•	1	Guide ring, Turcite	9613008411
19	•	1	O-ring, NBR	9611993509
20	•	1	O-ring, NBR	9611993607
21		1	Bottom	9613016801
22	•	1	Guide ring, Turcite	9613008404
23	•	1	O-ring, NBR	22340675
24		1	Retaining ring	9613024804
25		1	Cover disk	9613005804
26		1	O-ring, NBR	9611993530
27		1	Inner stem	9613007305
28	•	1	O-ring	9611990030
29		1	Piston rod	9613006004
30		1	Lower piston	9613016601
31	•	1	O-ring, NBR	42153
32	•	1	Guide ring, Turcite	9613008407
33	•	1	O-ring, NBR	9611993510
34		3	Bolt	9611993618
35		3	Washer	9611993594
36		3	Nut	9611990360
42		1	Spindle liner	9613009001
43		2	Clamp	9613009201
44		1	Lock	9613009101

• Actuator service kit, part no. 9611926416

Pos		Qty	Denomination	
45		1	Guide ring, PTFE	9613008426
48		1	Upper sealing element	9613488001
54		1	Guide ring, PTFE	9613008402
55		1	Upper plug	9613488901
61		2	Wing nut	9613149501
64		2	Clamp without nut	9613488401
75		1	Lower plug	9613494601
82	Δ	1	Bolt for indication	9613092604
83	Δ	1	Sensor for indication	9611995770
83.1		1	Cable for sensor for indication	9611994915
96		1	Lower sealing element, upper part	9613488101
97		1	Lower sealing element, lower part	9613488201
98		1	Guide ring, Turcite	9613466106

Note!

Δ Sensor service kit for valves delivered prior to October 2015 - 9611928352

900-584/4

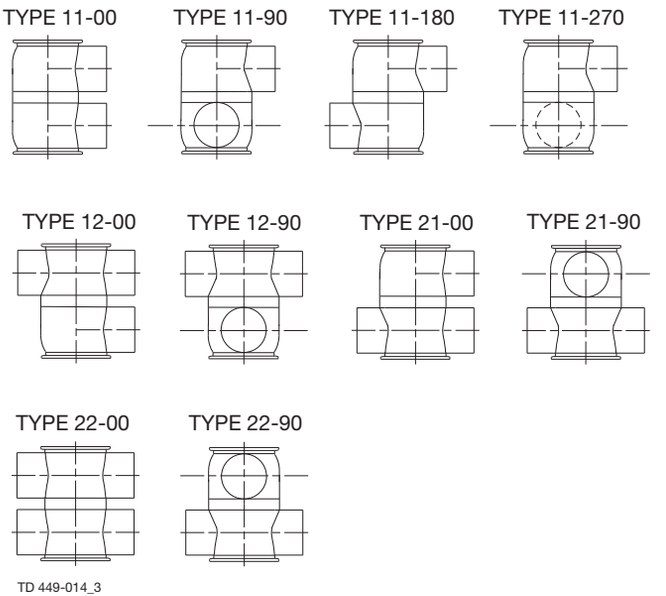
TYPE 11-00
TYPE 11-90
TYPE 11-180
TYPE 11-270
TYPE 12-00
TYPE 12-90
TYPE 21-00
TYPE 21-90
TYPE 22-00
TYPE 22-90
TD 449-014_3

Pos	Qty	Denomination	6" Seat ø206.1
37	1	Intermediate piece	9613496601
50	1	Valve body , 11-00	9613492001
	1	Valve body , 12-00	9613492005
	1	Valve body , 21-00	9613492007
	1	Valve body , 22-00	9613492009
	1	Valve body , 11-90	9613492002
	1	Valve body , 12-90	9613492006
	1	Valve body , 21-90	9613492008
	1	Valve body , 22-90	9613492010
	1	Valve body , 11-180	9613492003
	1	Valve body , 11-270	9613492004

1.7

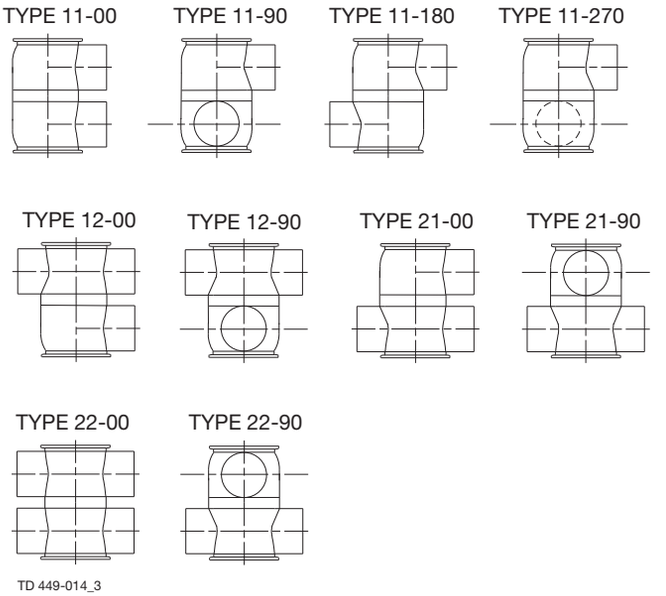

Service Kits

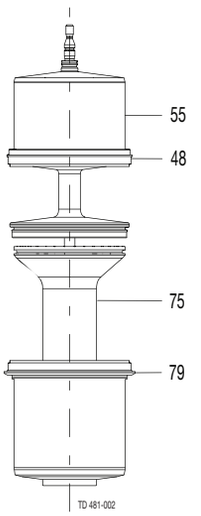

Pos	Qty	Denomination	4”	6”
37	1	Intermediate piece	9613019319	9613496601
50	1	Valve body, 11-00	9614196601	9614196611
	1	Valve body , 12-00	9614196605	9614196615
	1	Valve body , 21-00	9614196607	9614196617
	1	Valve body , 22-00	9614196609	9614196619
	1	Valve body , 11-90	9614196602	9614196612
	1	Valve body , 12-90	9614196606	9614196616
	1	Valve body , 21-90	9614196608	9614196618
	1	Valve body , 22-90	9614196610	9614196620
	1	Valve body , 11-180	9614196603	9614196613
	1	Valve body , 11-270	9614196604	9614196614

Service kits

4”

☐	**Service kit, NBR**	**9611926865**
☐	**Service kit, EPDM**	**9611926866**
☐	**Service kit, HNBR**	**9611926867**
☐	**Service kit, FPM**	**9611926868**

6”

☐	**Service kit, NBR**	**9611926857**
☐	**Service kit, EPDM**	**9611926858**
☐	**Service kit, HNBR**	**9611926859**
☐	**Service kit, FPM**	**9611926860**

NOTE!
All FPM service kits are supplied with EPDM seal ring, pos. 74.

1.7

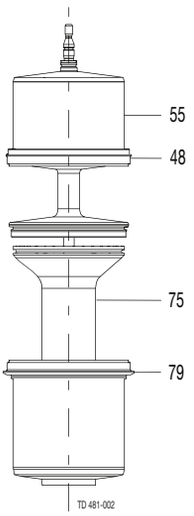

Plug set-up 12

Service Kits

4"

Service kit, NBR	9611926865
Service kit, EPDM	9611926866
Service kit, HNBR	9611926867
Service kit, FPM	9611926868

6"

Service kit, NBR	9611926857
Service kit, EPDM	9611926858
Service kit, HNBR	9611926859
Service kit, FPM	9611926860

NOTE!
All FPM service kits are supplied with EPDM seal ring, pos. 74.

900-584/4

1.7

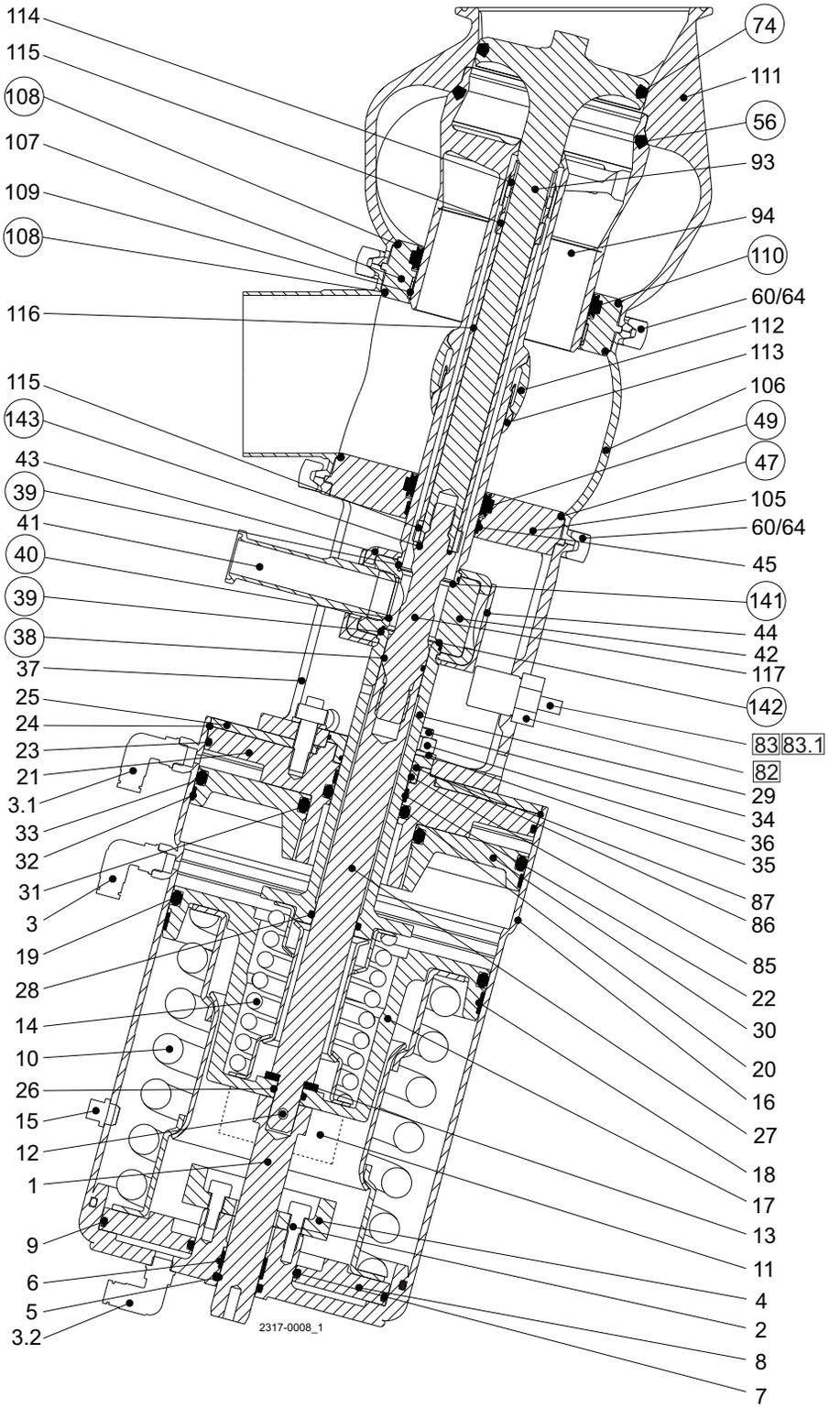

○ = wear parts

□ = sensor kit

Pos	Qty	Denomination	2½ 3” seat ø81.3	4” Seat ø115.3
38	1	O-ring, EPDM	9611992671	9611992671
39	2	O-ring, EPDM	9611993493	9611993493
	1	O-ring, EPDM		
	1	O-ring, EPDM		
40	1	O-ring, EPDM	9611992671	9611992671
47	1	O-ring, EPDM (Standard)	9611993636	9611993640
	1	O-ring, NBR	9611993637	9611993641
	1	O-ring, HNBR	9611993639	9611993643
	1	O-ring, FPM	9611993638	9611993642
49	1	Lip seal, EPDM (Standard)	9613008511	9613008511
	1	Lip seal, NBR	9613008512	9613008512
	1	Lip seal, HNBR	9613008514	9613008514
	1	Lip seal, FPM	9613008513	9613008513
56	1	Seal ring, EPDM (Standard)	9613095109	9613095112
	1	Seal ring, NBR	9613095115	9613095116
	1	Seal ring, HNBR	9613095107	9613095110
	1	Seal ring, FPM	9613095108	9613095111
74	1	Seal ring, EPDM (Standard)	9613095209	9613095212
	1	Seal ring, NBR	9613095215	9613095216
	1	Seal ring, HNBR	9613095207	9613095210
	1	Seal ring, FPM - Alfa Laval recommends EPDM	9613095208	9613095211
108	2	O-ring, EPDM (Standard)	9611993636	9611993640
	2	O-ring, NBR	9611993637	9611993641
	2	O-ring, HNBR	9611993639	9611993643
	2	O-ring, FPM	9611993638	9611993642
110	1	Lip seal, EPDM (Standard)	9613008526	9613008531
	1	Lip seal, NBR	9613008527	9613008532
	1	Lip seal, HNBR	9613008529	9613008534
	1	Lip seal, FPM	9613008528	9613008533
118	1	Clamp packing, EPDM (Standard)	290025	290131
	1	Clamp packing, NBR	298349	298220
	1	Clamp packing, HNBR	290172	290182
	1	Clamp packing, FPM	290172	290182
141	1	O-ring, EPDM	9611993493	9611993493
142	1	O-ring, EPDM	9611993493	9611993493
143	1	O-ring, EPDM	9611995345	9611995345

NOTE! All FPM service kits are supplied with EPDM seal ring, pos. 74.

1.7

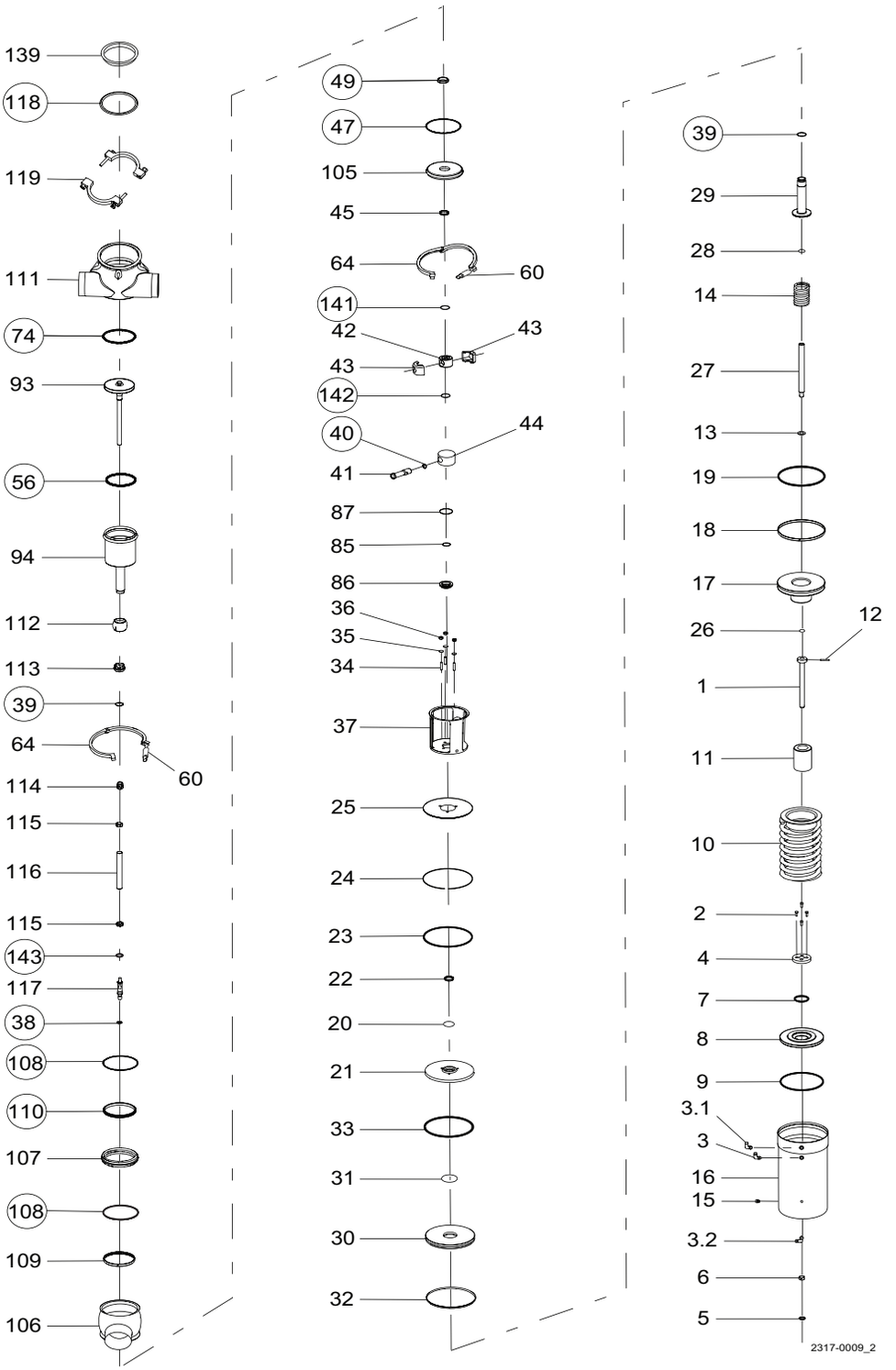
139
118
119
111
74
93
56
94
112
113
39
64
60
114
115
116
115
143
117
38
108
110
107
108
109
106
49
47
105
45
64
60
141
42
43
43
142
40
44
41
87
85
86
36
35
34
37
25
24
23
22
20
21
33
31
30
32
39
29
28
14
27
13
19
18
17
26
12
1
11
10
2
4
7
8
9
3.1
3
16
15
3.2
6
5
2317-0009_2

Pos		Qty	Denomination	2½" Seat ø81.3	3" Seat ø81.3	4" Seat ø115.3
			Cpl. Actuator	9613099541	9613099541	9614031332
1		1	Upper stem	9613007406	9613007406	9613007405
2		4	Screw	9611993342	9611993342	9611990144
3		1	Air fitting	9611991988	9611991988	9611991988
3.1		1	Air fitting	9611991988	9611991988	9611991988
3.2		1	Air fitting	9611991988	9611991988	9611991988
4		1	Stop for upper piston	9613005301	9613005301	9613488301
5	•	1	O-ring, NBR	9611993499	9611993499	9611993499
6		1	Guide ring, Turcite	9613008408	9613008408	9613008408
7	•	1	O-ring, NBR	9611995099	9611995099	9611995099
8		1	Upper piston	9614032101	9614032101	9614032102
9	•	1	O-ring, NBR	9611995097	9611995097	9611995098
10		1	Spring assembly	9613007502	9613007502	9613025607
11		1	Distance spacer			9613010207
12		1	Pin	9611994198	9611994198	9611994199
13		1	Washer	9611993595	9611993595	9611993596
14		1	Spring assembly	9613009504	9613009504	9613009504
15		1	Plug	9613414101	9613414101	9613414101
16		1	Cylinder	9613005113	9613005113	9613015027
17		1	Main piston	9614032201	9614032201	9614032202
18		1	Guide ring, Turcite	9613008410	9613008410	9613008411
19	•	1	O-ring, NBR	9611993507	9611993507	9611993509
20	•	1	O-ring, NBR	9611993607	9611993607	9611993607
21		1	Bottom	9613005401	9613005401	9613016801
22		1	Guide ring, Turcite	9613008404	9613008404	9613008404
23	•	1	O-ring, NBR	9611991489	9611991489	22340675
24		1	Retaining ring	9613024803	9613024803	9613024804
25		1	Cover disk	9613005803	9613005803	9613005804
26		1	O-ring, NBR	9611993495	9611993495	9611993530
27		1	Inner stem	9613007301	9613007301	9613007305
28	•	1	O-ring	9611990030	9611990030	9611990030
29		1	Piston rod	9613006006	9613006006	9613006005
30		1	Lower piston	9613005501	9613005501	9613016601
31	•	1	O-ring, NBR	42153	42153	42153
32		1	Guide ring, Turcite	9613008406	9613008406	9613008407
33	•	1	O-ring, NBR	9611993508	9611993508	9611993510
34		3	Bolt	9611995392	9611995392	9611995392
35		2	Washer	9611993594	9611993594	9611993594
35.1		1	Washer	9611992559	9611992559	9611992559
36		3	Nut	9611990360	9611990360	8010001387
41		1	Flushing tube	9614030801	9614030801	9614030802
42		1	Spindle liner	9614030701	9614030701	9614030701
43		2	Clamp	9614030601	9614030601	9614030601

		Ø157	Ø186
	Actuator diameter		
	Actuator type	4-TO Basic	6-TO Basic
			6-TO Strong
	Connection size*	2.5" + 3"	4"
•	Actuator service kit, part no.	9611928349	9611928350

1.7

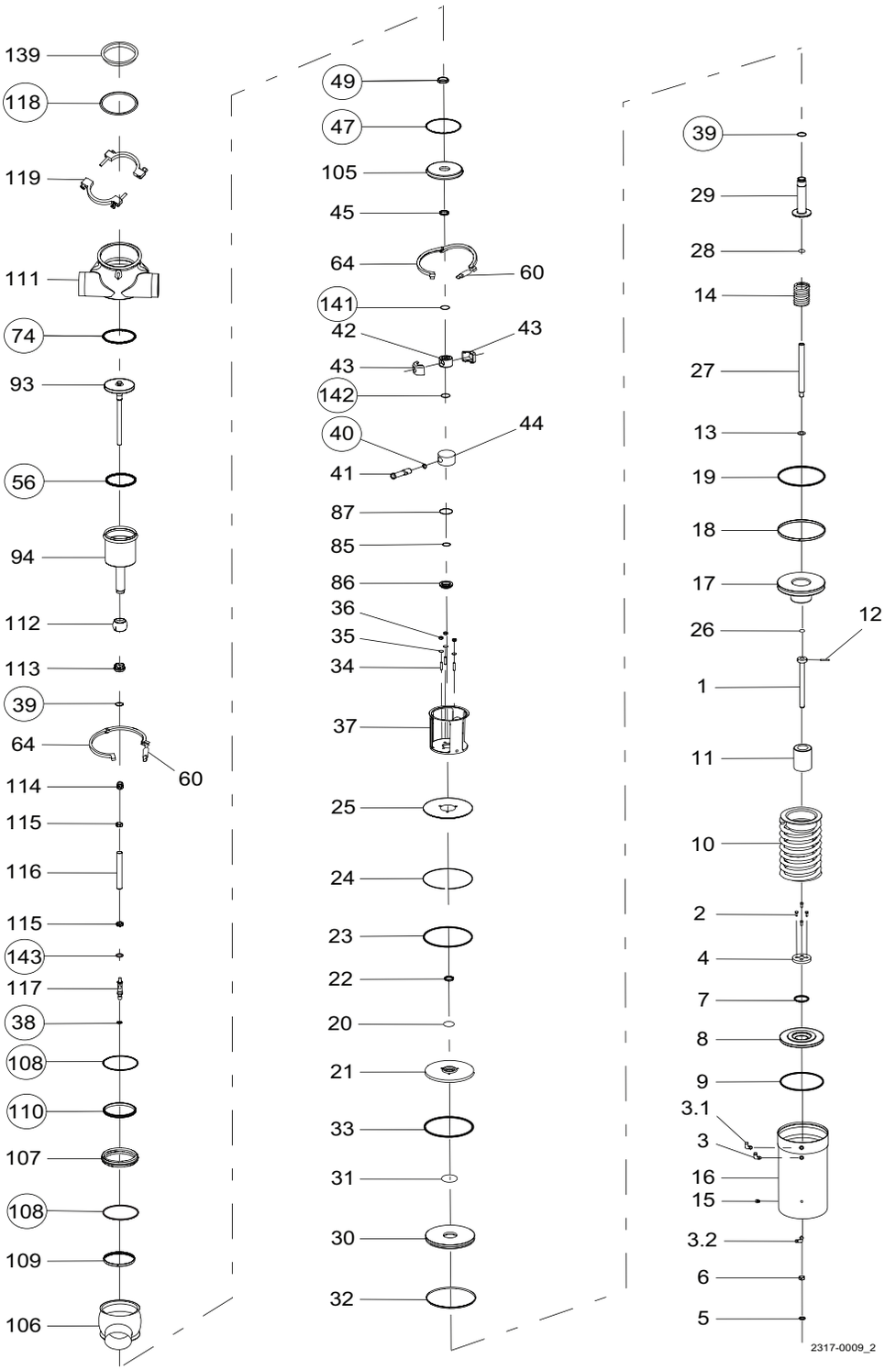
139
118
119
111
74
93
56
94
112
113
39
64
60
114
115
116
115
143
117
38
108
110
107
108
109
106
49
47
105
45
64
60
141
42
43
43
142
40
44
41
87
85
86
36
35
34
37
25
24
23
22
20
21
33
31
30
32
39
29
28
14
27
13
19
18
17
12
26
1
11
10
2
4
7
8
9
3.1
3
16
15
3.2
6
5
2317-0009_2

Pos	Qty	Denomination	2½" Seat ø81.3	3" Seat ø81.3	4" Seat ø115.3
44	1	Lock	9614030501	9614030501	9614030502
45	1	Guide ring, PTFE	9613008417	9613008417	9613008417
60	2	Hexnut	9613023201	9613023201	9613023201
64	2	Clamp without nut	9613021601	9613021601	9614076601
85	1	O-ring	9611990092	9611990092	9611990092
86	1	Plug for actuator	9613099002	9613099002	9613099002
87	1	O-ring	9611994599	9611994599	9611994599
93	1	Tank plug	9614007901	9614006601	9614008201
94	1	Balance plug	9614010701	9614009301	9614011001
105	1	Upper sealing element	9613006403	9613006403	9613018803
107	1	Sealing element	9614001301	9614001301	9614001401
109	1	Guide ring, PTFE	9613466108	9613466108	9613466109
112	1	Rotating nozzle	9614010101	9614010101	9614010101
113	1	Lockring rotating nozzle	9614010201	9614010201	9614010201
114	1	Rotating nozzle	9614007101	9614007101	9614007101
115	2	Guidering rotating nozzle	9614007201	9614007201	9614007201
116	1	Pipe	9614007302	9614007303	9614007304
117	1	Spindle	9614007401	9614007401	9614007401
119	1	Clamp	210042	210042	9634048982
139	1	Clamp ferrule	610373	610373	9634049938

900-636/6

1.7

TC

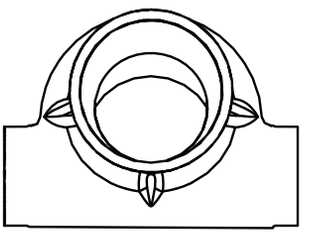

Service kits

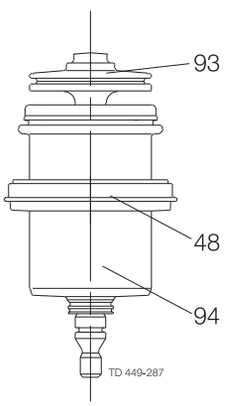

Pos	Qty	Denomination	2½" Seat ø81.3	3" Seat ø81.3	4" Seat ø115.3
37	1	Intermediate piece	9613019123	9613019123	9613019217
111	1	Valve body, TC, clamp end	9614197603	9614197609	9614197615
	1	Valve body, TC, welding end	9614197606	9614197612	9614197618
106	1	Vent body	9614197802	9614197803	9614197804

Service kits

2½" + 3"

Service kit, EPDM	9611926881
Service kit, NBR	9611926882
Service kit, HNBR	9611926883
Service kit, FPM	9611926884

4"

Service kit, EPDM	9611926885
Service kit, NBR	9611926886
Service kit, HNBR	9611926887
Service kit, FPM	9611926888

NOTE!
All FPM service kits are supplied with EPDM seal ring, pos. 74.

1.7

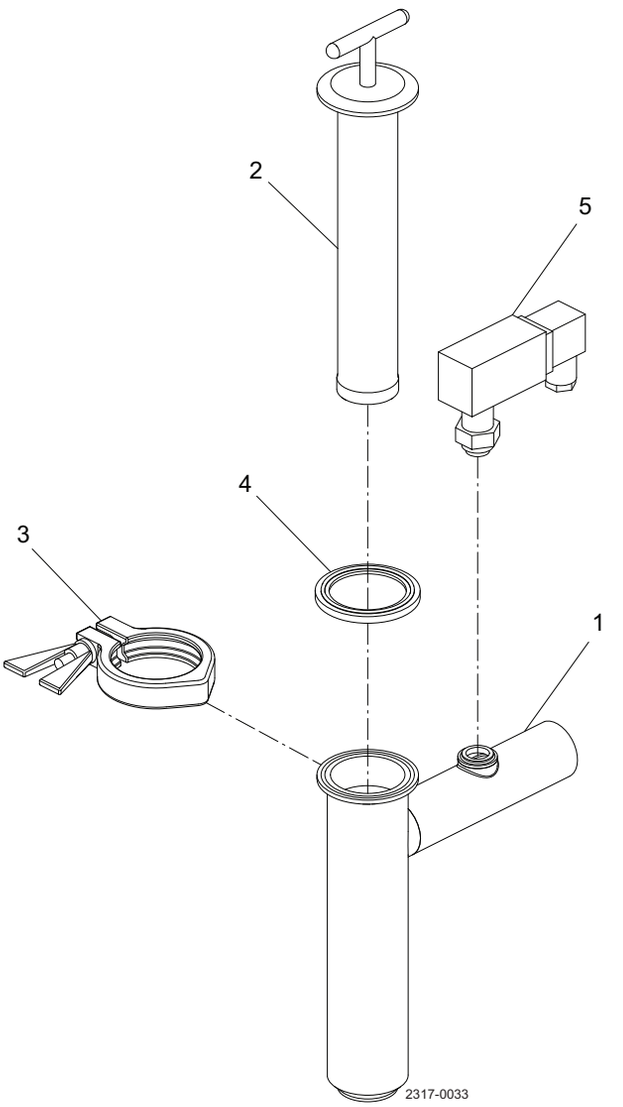

Pos	Qty	Denomination	
1	1	Filter house	
3	1	Clamp ring	9611994454
4	1	Gasket	9611990767

900-649

1.7

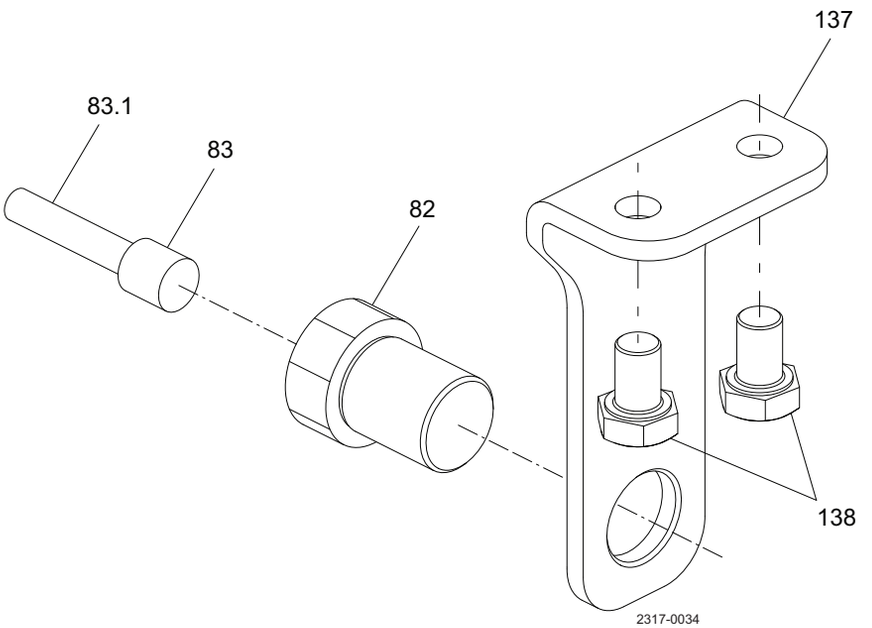

Pos	Qty	Denomination	2½"-4"	6"
82	1	Bolt for indication	9613092603	9613092603
83	1	Sensor for indication	9611994916	9611994916
83.1	1	Cable for sensor for indication	9611994915	9611994915
137	1	Indication bracket	N/A	9614046401
138	2	Screw for indication bracket	N/A	9611992105

900-639

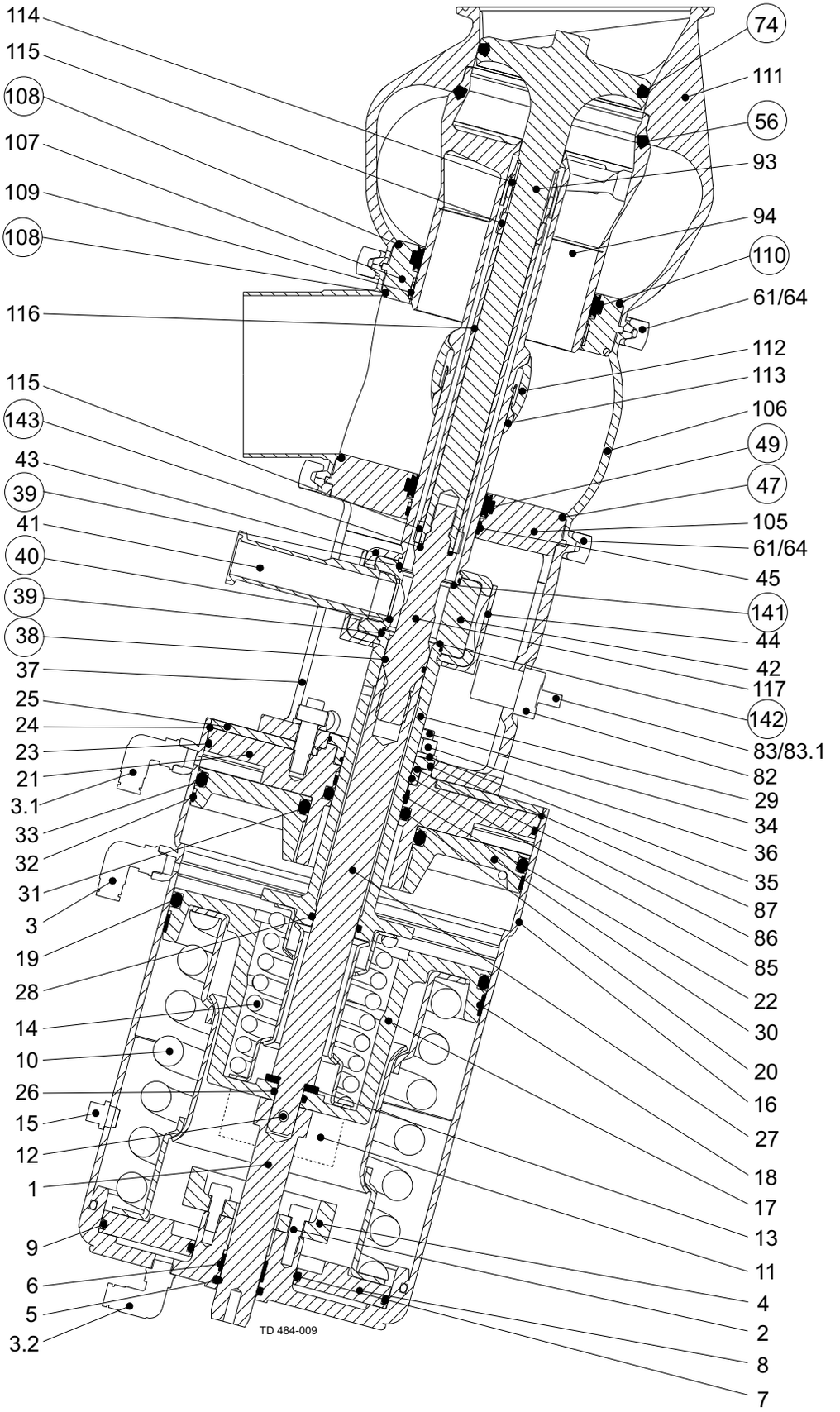
114
115
108
107
109
108
116
115
143
43
39
41
40
39
38
37
25
24
23
21
3.1
33
32
31
3
19
28
14
10
26
15
12
1
9
6
5
3.2
74
111
56
93
94
110
61/64
112
113
106
49
47
105
61/64
45
141
44
42
117
142
83/83.1
82
29
34
36
35
87
86
85
22
30
20
16
27
18
17
13
11
4
2
8
7
TD 484-009

Wear parts

Pos	Qty	Denomination	2½" 3" Seat ø81.3	4" Seat ø115.3
38	1	O-ring, EPDM	9611992671	9611992671
39	2	O-ring, EPDM	9611993493	9611993493
	1	O-ring, EPDM		
	1	O-ring, EPDM		
40	1	O-ring, EPDM	9611992671	9611992671
47	1	O-ring, EPDM (Standard)	9611993636	9611993640
	1	O-ring, NBR	9611993637	9611993641
	1	O-ring, HNBR	9611993639	9611993643
	1	O-ring, FPM	9611993638	9611993642
49	1	Lip seal, EPDM (Standard)	9613008511	9613008511
	1	Lip seal, NBR	9613008512	9613008512
	1	Lip seal, HNBR	9613008514	9613008514
	1	Lip seal, FPM	9613008513	9613008513
56	1	Seal ring, EPDM (Standard)	9613095109	9613095112
	1	Seal ring, NBR	9613095115	9613095116
	1	Seal ring, HNBR	9613095107	9613095110
	1	Seal ring, FPM	9613095108	9613095111
74	1	Seal ring, EPDM (Standard)	9613095209	9613095212
	1	Seal ring, NBR	9613095215	9613095216
	1	Seal ring, HNBR	9613095207	9613095210
	1	Seal ring, FPM - Alfa Laval recommends EPDM	9613095208	9613095211
108	2	O-ring, EPDM (Standard)	9611993636	9611993640
	2	O-ring, NBR	9611993637	9611993641
	2	O-ring, HNBR	9611993639	9611993643
	2	O-ring, FPM	9611993638	9611993642
110	1	Lip seal, EPDM (Standard)	9613008526	9613008531
	1	Lip seal, NBR	9613008527	9613008532
	1	Lip seal, HNBR	9613008529	9613008534
	1	Lip seal, FPM	9613008528	9613008533
118	1	Clamp packing, EPDM (Standard)	290025	290131
	1	Clamp packing, NBR	298349	298220
	1	Clamp packing, HNBR	290172	290182
	1	Clamp packing, FPM	290172	290182
141	1	O-ring, EPDM	9611993493	9611993493
142	1	O-ring, EPDM	9611993493	9611993493
143	1	O-ring, EPDM	9611995345	9611995345

NOTE!

All FPM service kits are supplied with EPDM seal ring, pos. 74.

1.7

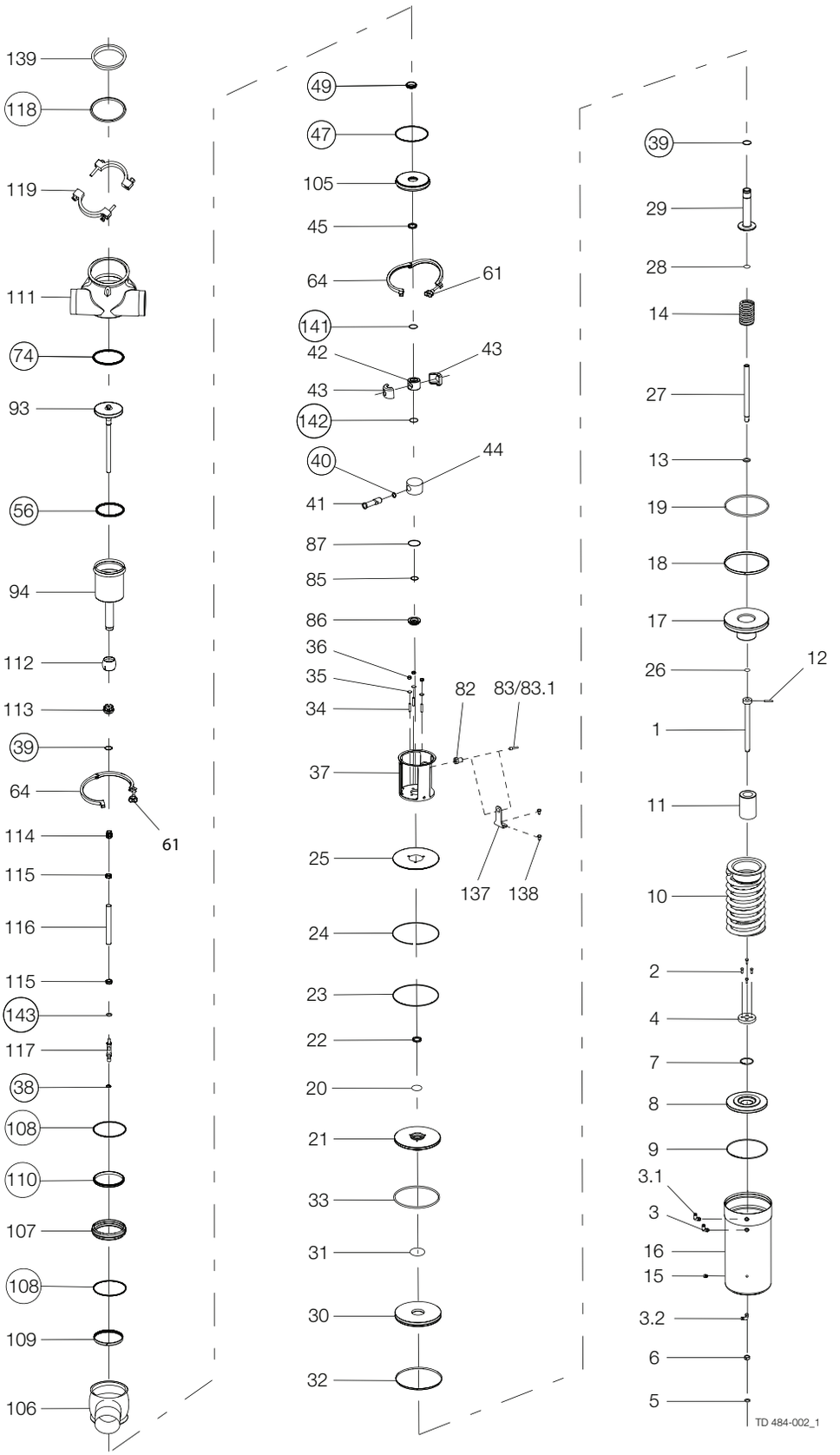
139
118
119
111
74
93
56
94
112
113
39
64
61
114
115
116
115
143
117
38
108
110
107
108
109
106
49
47
105
45
64
61
141
42
43
43
142
40
44
41
87
85
86
36
35
34
82
83/83.1
37
25
137
138
24
23
22
20
21
33
31
30
32
39
29
28
14
27
13
19
18
17
26
12
1
11
10
2
4
7
8
9
3.1
3
16
15
3.2
6
5
TD 484-002_1

Parts

Pos		Qty	Denomination	2½" Seat ø81.3	3" Seat ø81.3	4" Seat ø115.3
		1	Cpl. Actuator	9613099525	9613099525	9613489052
1		1	Upper stem	9613007406	9613007406	9613007405
2		4	Screw	9611993342	9611993342	9611990144
3		1	Kit, air fitting and label, (blue, ThinkTop)	9611926026	9611926026	9611926026
		1	Kit, air fitting and label, (white, Thinktop V-Series)	8010000754	8010000754	8010000754
3.1		1	Kit, air fitting and label, (red, ThinkTop)	9611926028	9611926028	9611926028
		1	Kit, air fitting and label, (blue, Thinktop V-Series)	9611926026	9611926026	9611926026
3.2		1	Kit, air fitting and label, (yellow)	9611926027	9611926027	9611926027
4		1	Stop for upper piston	9613005301	9613005301	9613488301
5	•	1	O-ring, NBR	9611993499	9611993499	9611993499
6	•	1	Guide ring, Turcite	9613008408	9613008408	9613008408
7	•	1	O-ring, NBR	9611995099	9611995099	9611995099
8		1	Upper piston	9614032101	9614032101	9614032102
9	•	1	O-ring, NBR	9611995097	9611995097	9611995097
10		1	Spring assembly	9613007502	9613007502	9613025607
11		1	Distance spacer			9613010207
12		1	Pin	9611994198	9611994198	9611994199
13		1	Washer	9611993595	9611993595	9611993596
14		1	Spring assembly	9613009504	9613009504	9613009504
15		1	Plug	9613414101	9613414101	9613414101
16		1	Cylinder (3A marking)	9613005112	9613005112	9613015028
17		1	Main piston	9614032201	9614032201	9614032202
18	•	1	Guide ring, Turcite	9613008410	9613008410	9613008411
19	•	1	O-ring, NBR	9611993507	9611993507	9611993509
20	•	1	O-ring, NBR	9611993607	9611993607	9611993607
21		1	Bottom	9613005401	9613005401	9613016801
22	•	1	Guide ring, Turcite	9613008404	9613008404	9613008404
23	•	1	O-ring, NBR	9611991489	9611991489	22340675
24		1	Retaining ring	9613024803	9613024803	9613024804
25		1	Cover disk	9613005803	9613005803	9613005804
26		1	O-ring, NBR	9611993495	9611993495	9611993530
27		1	Inner stem	9613007301	9613007301	9613007305
28	•	1	O-ring	9611990030	9611990030	9611990030
29		1	Piston rod	9613006006	9613006006	9613006005
30		1	Lower piston	9613005501	9613005501	9613016601
31	•	1	O-ring, NBR	42153	42153	42153
32	•	1	Guide ring, Turcite	9613008406	9613008406	9613008407
33	•	1	O-ring, NBR	9611993508	9611993508	9611993510
34		3	Bolt	9611995392	9611995392	9611995392
35		2	Washer	9611993594	9611993594	9611993594
35.1		1	Washer	9611992559	9611992559	9611992559
36		3	Nut	9611990360	9611990360	8010001387
41		1	Flushing tube	9614030801	9614030801	9614030802
42		1	Spindle liner	9614030701	9614030701	9614030701
43		2	Clamp	9614030601	9614030601	9614030601
44		1	Lock	9614030501	9614030501	9614030501

Actuator diameter	Ø157	Ø186
Actuator type	4-TO Basic	6-TO Basic 6-TO Strong
Connection size*	2.5" + 3"	4"
• Actuator service kit, part no.	9611928349	9611928350

Parts

1.7

Pos	Qty	Denomination	2½" Seat ø81.3	3" Seat ø81.3	4" Seat ø115.3
45	1	Guide ring, PTFE	9613008417	9613008417	9613008417
61	2	Wingnut	9612558001	9612558001	9612558001
64	2	Clamp without nut	9613021601	9613021601	9614076601
82 Δ	1	Bolt for indication	9613092604	9613092604	9613092604
83 Δ	1	Sensor for indication	9611995770	9611995770	9611995770
83.1	1	Cable for sensor for indication	9611994915	9611994915	9611994915
85	1	O-ring	9611990092	9611990092	9611990092
86	1	Plug for actuator	9613099002	9613099002	9613099002
87	1	O-ring	9611994599	9611994599	9611994599
93	1	Tank plug	9614007901	9614006601	9614008201
94	1	Balance plug	9614010701	9614009301	9614011001
105	1	Upper sealing element	9613006403	9613006403	9613018803
107	1	Sealing element	9614001301	9614001301	9614001401
109	1	Guide ring, PTFE	9613466108	9613466108	9613466109
112	1	Rotating nozzle	9614010101	9614010101	9614010101
113	1	Lock ring rotating nozzle	9614010201	9614010201	9614010201
114	1	Rotating nozzle	9614007101	9614007101	9614007101
115	2	Guidering rotating nozzle	9614007201	9614007201	9614007201
116	1	Pipe	9614007302	9614007303	9614007304
117	1	Spindle	9614007401	9614007401	9614007401
119	1	Clamp	210042	210042	9634048982
137	1	Indication bracket	N/A	N/A	N/A
138	2	Screw for indication bracket	N/A	N/A	N/A
139	1	Clamp ferrule	610373	610373	9634049938

Note!

Δ Sensor service kit for valves delivered prior to October 2015 - 9611928352

900577/9

Parts

TC

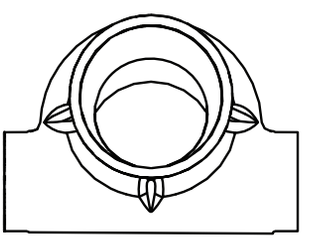

2317-0100

Pos	Qty	Denomination	2½" Seat ø81.3	3" Seat ø81.3	4" Seat ø115.3
37	1	Intermediate piece	9613019123	9613019123	9613019217
111	1	Valve body TC, clamp end	9614005003	9614005303	9614005603
	1	Valve body TC, welding end	9614005006	9614005306	9614005606
106	1	Vent body	9614001901	9614002201	9614002501

Service kits for Product Wetted Parts

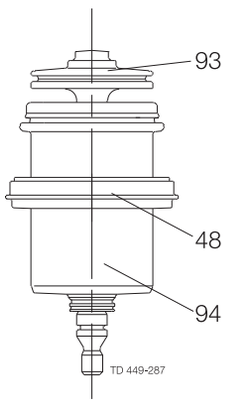

2.5" + 3"

Service kit, EPDM	9611926881
Service kit, NBR	9611926882
Service kit, HNBR	9611926883
Service kit, FPM	9611926884

4”

Service kit, EPDM	9611926885
Service kit, NBR	9611926886
Service kit, HNBR	9611926887
Service kit, FPM	9611926888

NOTE!
All FPM service kits are supplied with EPDM seal ring, pos. 74.

1.7

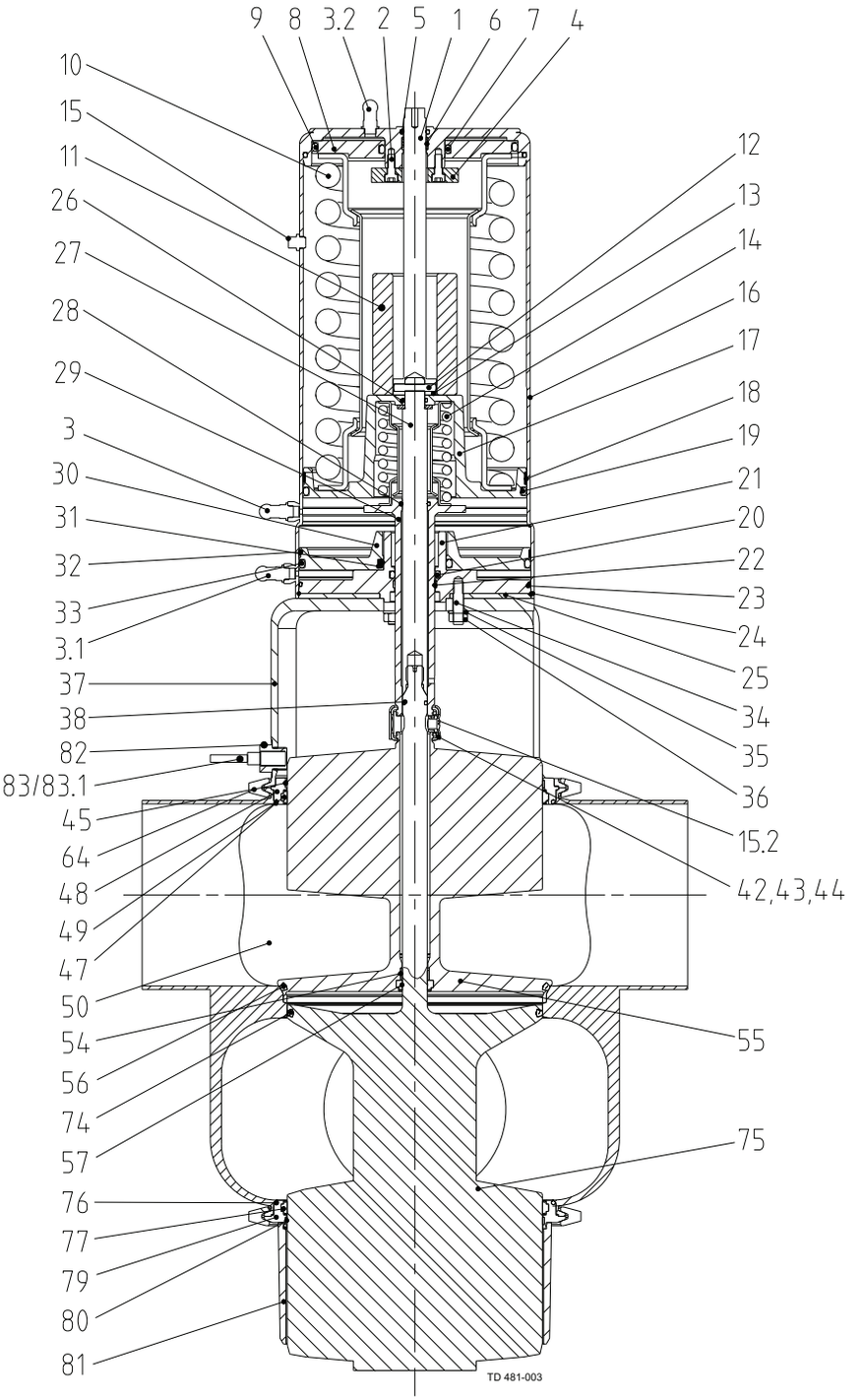
9
8
3.2
2
5
1
6
7
4
10
15
11
26
27
28
29
3
30
31
32
33
3.1
37
38
82
83/83.1
45
64
48
49
47
50
54
56
74
57
76
77
79
80
81
12
13
14
16
17
18
19
21
20
22
23
24
25
34
35
36
15.2
42,43,44
55
75
TD 481-003

Wear Parts

Pos	Qty	Denomination	PMO 4" Seat ø143.9	PMO 6" Seat ø206.1
38	1	O-ring, EPDM	9611993572	9611993572
47	1	O-ring, EPDM (Standard)	9611993644	9611995003
	1	O-ring, NBR	9611993645	9611995004
	1	O-ring, HNBR	9611993647	9611995006
	1	O-ring, FPM	9611993646	9611995005
49	1	Lip seal, EPDM (Standard)	9613008536	9613008560
	1	Lip seal, NBR	9613008537	9613008561
	1	Lip seal, HNBR	9613008539	9613008563
	1	Lip seal, FPM	9613008538	9613008562
56	1	Seal ring, EPDM (Standard)	9613095123	9613095151
	1	Seal ring, NBR	9613095124	9613095152
	1	Seal ring, HNBR	9613095121	9613095149
	1	Seal ring, FPM	9613095122	9613095150
57	1	Lip seal, EPDM (Standard)	9613008711	9613008711
	1	Lip seal, NBR	9613008712	9613008712
	1	Lip seal, HNBR	9613008714	9613008714
	1	Lip seal, FPM	9613008713	9613008713
74	1	Seal ring, EPDM (Standard)	9613095223	9613095247
	1	Seal ring, NBR	9613095224	9613095248
	1	Seal ring, HNBR	9613095221	9613095245
	1	Seal ring , FPM - Alfa Laval recommends EPDM	9613095222	9613095246
76	1	O-ring , EPDM (Standard)	9611993644	9611995003
	1	O-ring, NBR	9611993645	9611995004
	1	O-ring , HNBR	9611993647	9611995006
	1	O-ring, FPM	9611993646	9611995005
77	1	Lip seal, EPDM (Standard)	9613008521	9613008560
	1	Lip seal, NBR	9613008522	9613008561
	1	Lip seal, HNBR	9613008524	9613008563
	1	Lip seal, FPM	9613008523	9613008562

NOTE!
All FPM service kits are supplied with EPDM seal ring, pos. 74.

1.7

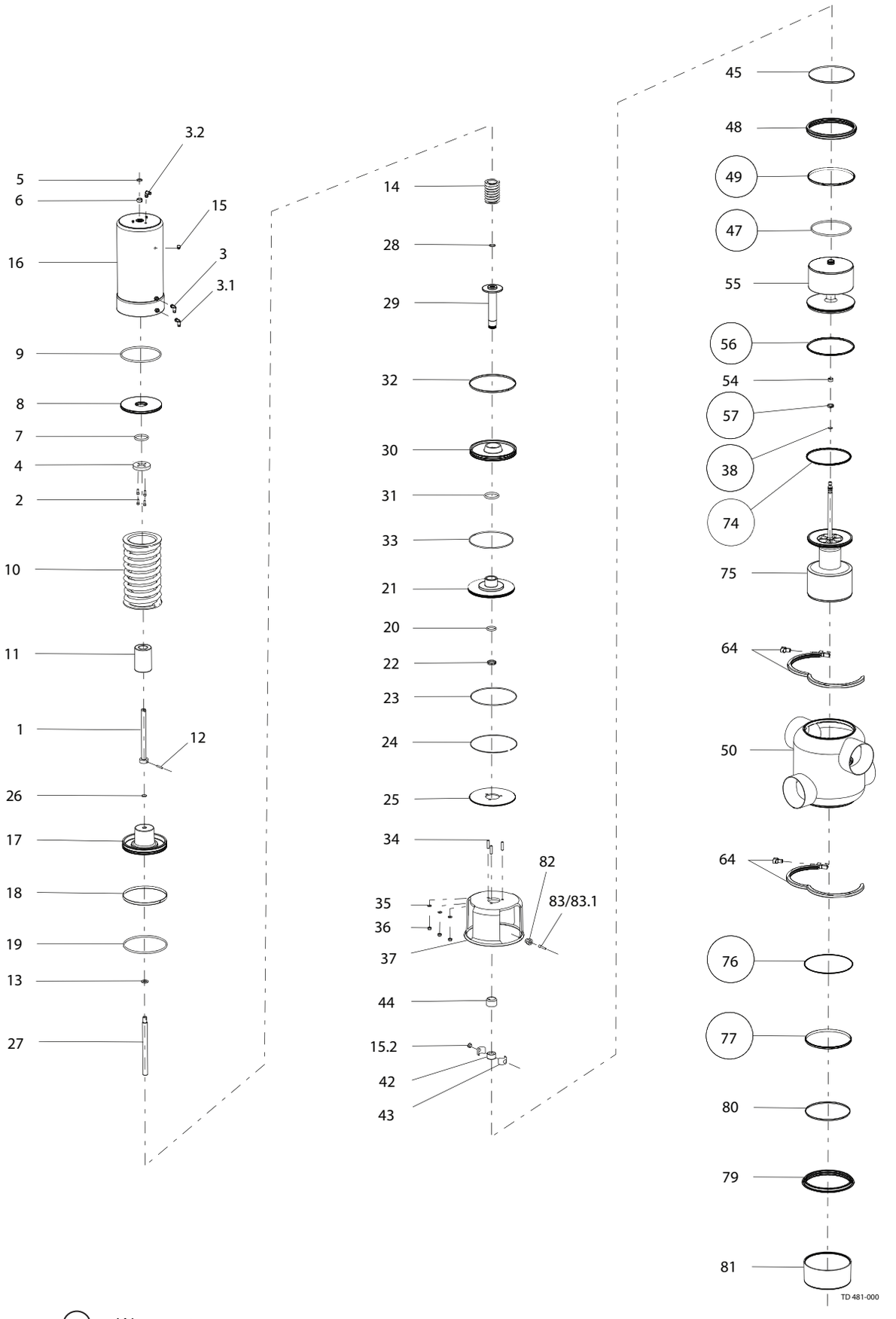

◯ = Wear parts

Parts

Pos		Qty	Denomination	4" Seat ø143.9	6" Seat ø206.1
			Cpl. Actuator	9613489024	9613489016
1		1	Upper stem	9613007404	9613007404
2		4	Screw	9611990144	9611990144
3		1	Kit, air fitting and label , (blue, ThinkTop)	9611926026	9611926026
		1	Kit, air fitting and label , (white, ThinkTop V-Series)	8010000754	8010000754
3.1		1	Kit, air fitting and label, (red, ThinkTop)	9611926028	9611926028
		1	Kit, air fitting and label, (blue, ThinkTop V-Series)	9611926026	9611926026
3.2		1	Kit, air fitting and label, (yellow)	9611926027	9611926027
4		1	Stop for upper piston	9613488301	9613488301
5	•	1	O-ring, NBR	9611993499	9611993499
6	•	1	Guide ring, Turcite	9613008408	9613008408
7	•	1	O-ring, NBR	9611993514	9611993514
8		1	Upper piston	9613005602	9613005602
9	•	1	O-ring, NBR	9611993513	9611993513
10		1	Spring assembly	9613025607	9613025605
11		1	Distance spacer	9613010207	9613010207
12		1	Pin	9611994199	9611994199
13		1	Washer	9611993596	9611993596
14		1	Spring assembly	9613009502	9613009503
15		2	Plug	9613414101	9613414101
16		1	Cylinder (3A marking)	9613015023	9613015023
17		1	Main piston	9613015901	9613015901
18	•	1	Guide ring, Turcite	9613008411	9613008411
19	•	1	O-ring, NBR	9611993509	9611993509
20	•	1	O-ring, NBR	9611993607	9611993607
21		1	Bottom	9613016801	9613016801
22	•	1	Guide ring, Turcite	9613008404	9613008404
23	•	1	O-ring, NBR	22340675	22340675
24		1	Retaining ring	9613024804	9613024804
25		1	Cover disk	9613005804	9613005804
26		1	O-ring, NBR	9611993530	9611993530
27		1	Inner stem	9613007305	9613007305
28	•	1	O-ring	9611990030	9611990030
29		1	Piston rod	9613006004	9613006004
30		1	Lower piston	9613016601	9613016601
31	•	1	O-ring, NBR	42153	42153
32	•	1	Guide ring, Turcite	9613008407	9613008407
33	•	1	O-ring, NBR	9611993510	9611993510
34		3	Bolt	9611993618	9611993618
35		3	Washer	9611993594	9611993594
36		3	Nut	9611990360	9611990360
42		1	Spindle liner	9613009001	9613009001
43		2	Clamp	9613009201	9613009201
44		1	Lock	9613009101	9613009101
			• Actuator service kit, part.no.	9611926416	9611926416

Pos		Qty	Denomination		
45		1	Guide ring, PTFE	9613008421	9613008426
48		1	Upper sealing element	9613071301	9613488001
54		1	Guide ring, PTFE	9613008402	9613008402
55		1	Upper plug	9613498301	9613488901
61		2	Wingnut	9612558001	9613149501
64		2	Clamp	9613021801	9613488401
75		1	Lower plug	9613497901	9613497801
79		1	Lower sealing element	9613082704	9613489101
80		1	Guide ring, PTFE	9613008413	9613008426
81		1	Cover for Plug	9613049027	9613049025
82	Δ	1	Bolt for indication	9613092604	9613092604
83	Δ	1	Sensor for indication	9611995770	9611995770
83.1		1	Cable for sensor for indication	9611994915	9611994915

Note!

Δ Sensor service kit for valves delivered prior to October 2015 - 9611928352

1.7

Parts

Pos	Qty	Denomination	PMO 4" Seat ø143.9	PMO 6" Seat ø206.1
37	1	Intermediate piece	9613019319	9613496601
50	1	Valve body , 11-00	9613493301	9613492001
	1	Valve body , 12-00	9613493305	9613492005
	1	Valve body , 21-00	9613493307	9613492007
	1	Valve body , 22-00	9613493309	9613492009
	1	Valve body , 11-90	9613493302	9613492002
	1	Valve body , 12-90	9613493306	9613492006
	1	Valve body , 21-90	9613493308	9613492008
	1	Valve body , 22-90	9613493310	9613492010
	1	Valve body , 11-180	9613493303	9613492003
	1	Valve body , 11-270	9613493304	9613492004

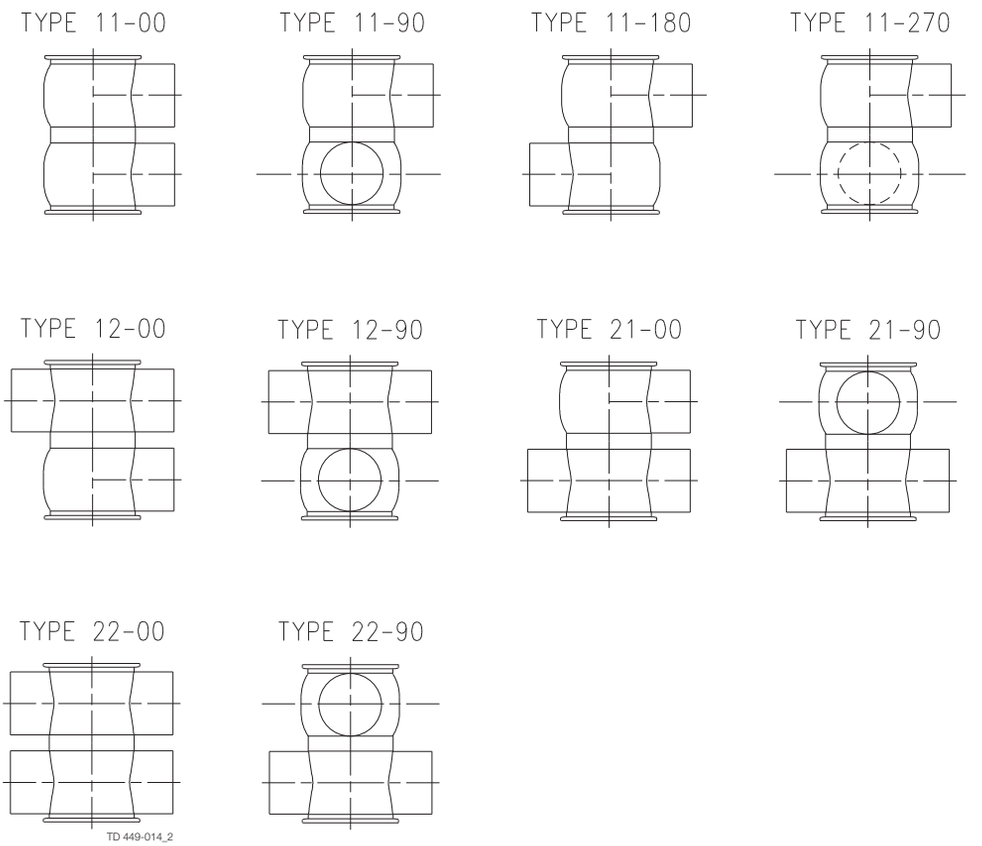

Service kits for Product Wetted Parts

Plug set-up

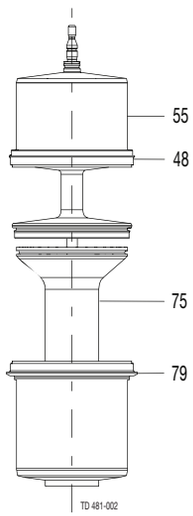

(Plug set-up 12)

PMO 4"

Service kit, NBR	9611926861
Service kit, EPDM	9611926862
Service kit, HNBR	9611926863
Service kit, FPM	9611926864

PMO 6"

Service kit, NBR	9611926849
Service kit, EPDM	9611926850
Service kit, HNBR	9611926851
Service kit, FPM	9611926852

NOTE!
All FPM service kits are supplied with EPDM seal ring, pos. 74.

Rebuilding set - Unique PMO Curd to Unique PMO Curd CP

1.7

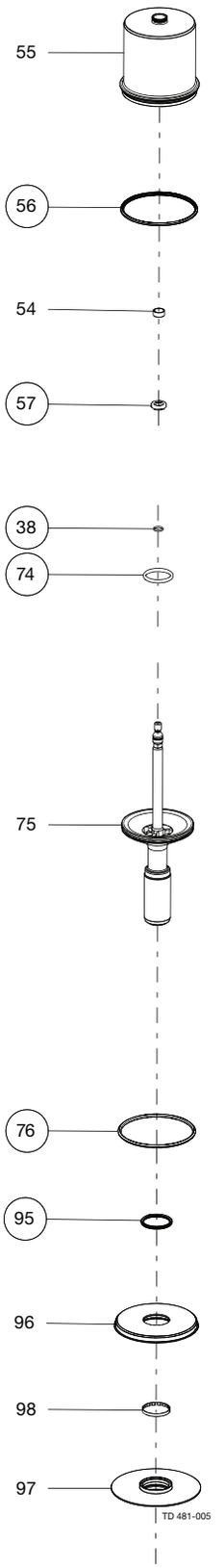

Rebuilding set - Unique PMO Curd to Unique PMO Curd CP

Pos	Qty	Denomination	PMO 4" Seat ø143.9	PMO 6" Seat ø206.1
		Upper plug, cpl., NBR	9614052901	9614052902
		Upper plug, cpl., EPDM	9614052903	9614052904
		Upper plug, cpl., HNBR	9614052905	9614052906
		Upper plug, cpl., FPM	9614052907	9614052908

Pos	Qty	Denomination
54	1	Guide ring
55	1	Upper plug
56	1	Seal ring
57	1	Lip seal
99	1	Label

Pos	Qty	Denomination	PMO 4" Seat ø143.9	PMO 6" Seat ø206.1
		Lower plug, cpl., NBR	9614052909	9614052910
		Lower plug, cpl., EPDM	9614052911	9614052912
		Lower plug, cpl., HNBR	9614052913	9614052914
		Lower plug, cpl., FPM	9614052915	9614052916

Pos	Qty	Denomination
38	1	O-ring
74	1	Seal ring
75	1	Lower plug
76	1	O-ring
95	1	Special lip seal
96	1	Lower sealing element, upper part
97	1	Lower sealing element, lower part
98	1	Guide ring

1.7

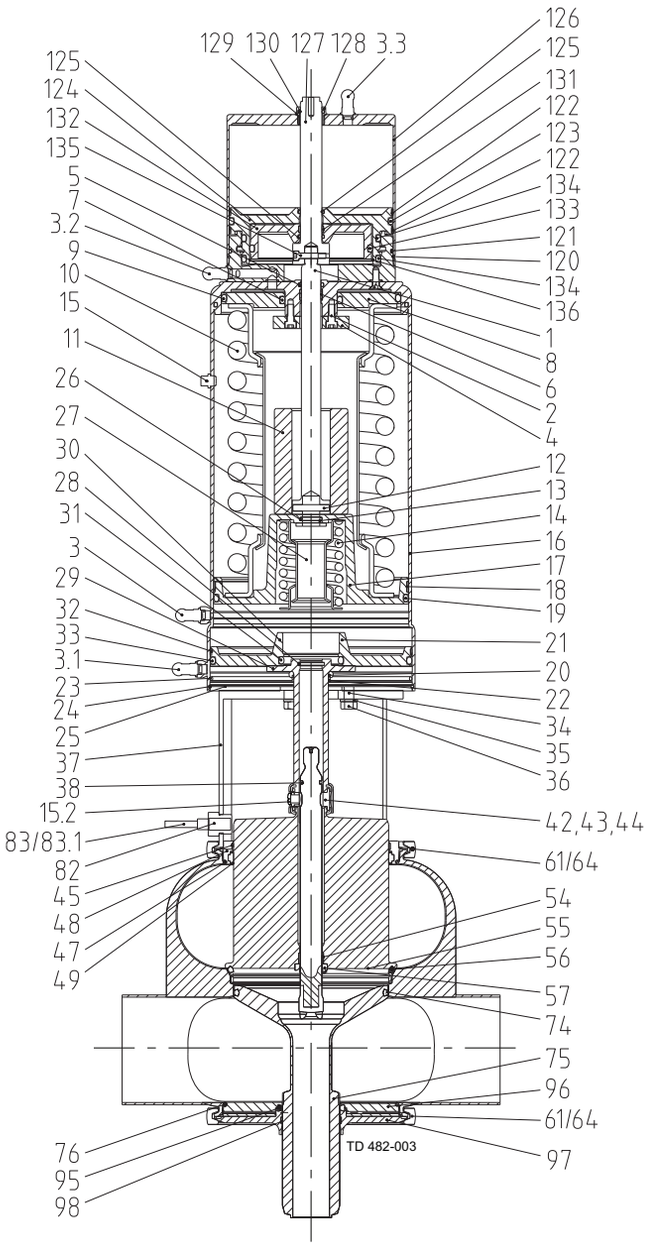
129 130 127 128 3.3
125
124
132
135
5
7
3.2
9
10
15
11
26
27
30
28
31
3
29
32
33
3.1
23
24
25
37
38
15.2
83/83.1
82
45
48
47
49
126
125
131
122
123
122
134
133
121
120
134
136
1
8
6
2
4
12
13
14
16
17
18
19
21
20
22
34
35
36
42,43,44
61/64
54
55
56
57
74
75
96
61/64
97
76
95
98
TD 482-003

4”

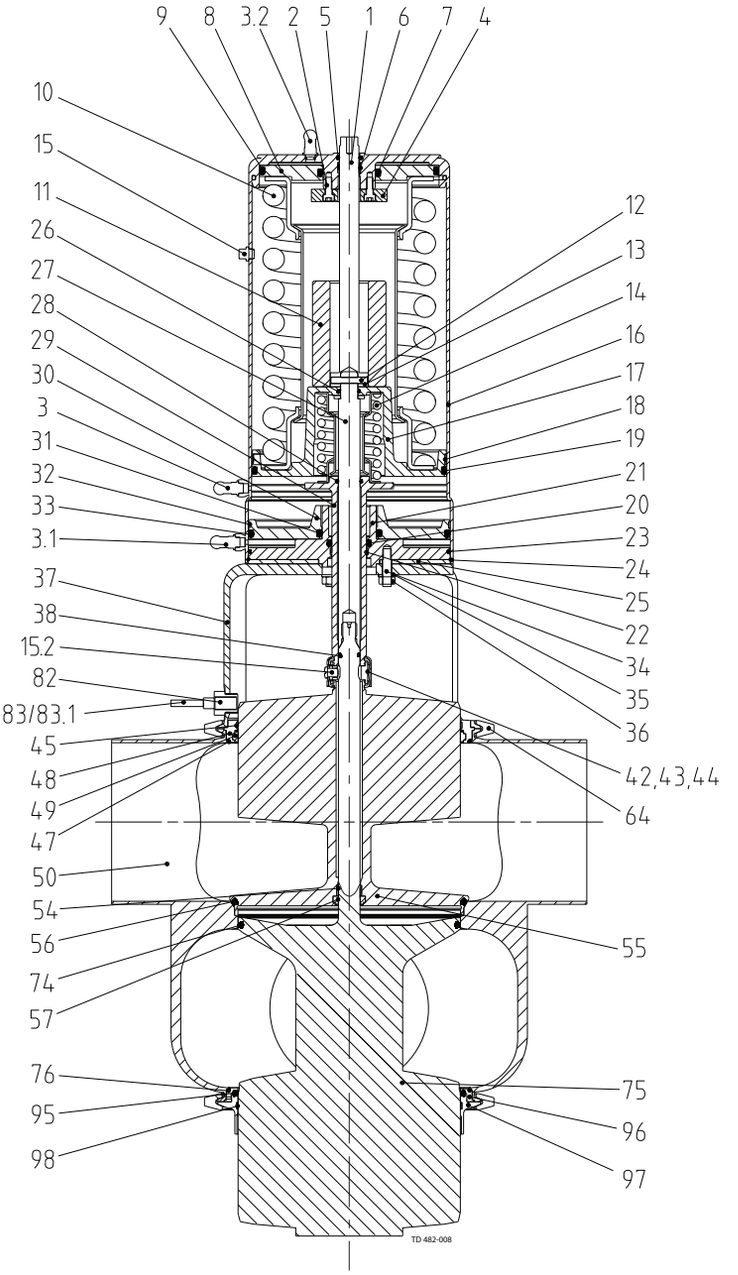
9 8 3.2 2 5 1 6 7 4
10
15
11
26
27
28
29
30
3
31
32
33
3.1
37
38
15.2
82
83/83.1
45
48
49
47
50
54
56
74
57
76
95
98
12
13
14
16
17
18
19
21
20
23
24
25
22
34
35
36
42,43,44
64
55
75
96
97
TD 482-008

6”

Wear Parts

Pos	Qty	Denomination	PMO 4" Seat ø143.9	PMO 6" Seat ø206.1
38	1	O-ring , EPDM	9611993572	9611993572
47	1	O-ring, EPDM (Standard)	9611993644	9611995003
	1	O-ring, NBR	9611993645	9611995004
	1	O-ring, HNBR	9611993647	9611995006
	1	O-ring, FPM	9611993646	9611995005
49	1	Lip seal, EPDM (Standard)	9613008536	9613008560
	1	Lip seal, NBR	9613008537	9613008561
	1	Lip seal, HNBR	9613008539	9613008563
	1	Lip seal, FPM	9613008538	9613008562
56	1	Seal ring, EPDM (Standard)	9613095123	9613095151
	1	Seal ring, NBR	9613095124	9613095152
	1	Seal ring, HNBR	9613095121	9613095149
	1	Seal ring, FPM	9613095122	9613095150
57	1	Lip seal, EPDM (Standard)	9613008711	9613008711
	1	Lip seal, NBR	9613008712	9613008712
	1	Lip seal, HNBR	9613008714	9613008714
	1	Lip seal, FPM	9613008713	9613008713
74	1	Seal ring, EPDM (Standard)	9613095223	9613095247
	1	Seal ring, NBR	9613095224	9613095248
	1	Seal ring, HNBR	9613095221	9613095245
	1	Seal ring, FPM - Alfa Laval recommeds EPDM	9613095222	9613095246
76	1	O-ring, EPDM (Standard)	9611993644	9611995003
	1	O-ring, NBR	9611993645	9611995004
	1	O-ring, HNBR	9611993647	9611995006
	1	O-ring, FPM	9611993646	9611995005
95	1	Special lip seal, EPDM (Standard)	9613464215	9613464247
	1	Special lip seal, NBR	9613464216	9613464248
	1	Special lip seal, HNBR	9613464213	9613464245
	1	Special lip seal, FPM	9613464214	9613464246

NOTE!
All FPM service kits are supplied with EPDM seal ring, pos. 74.

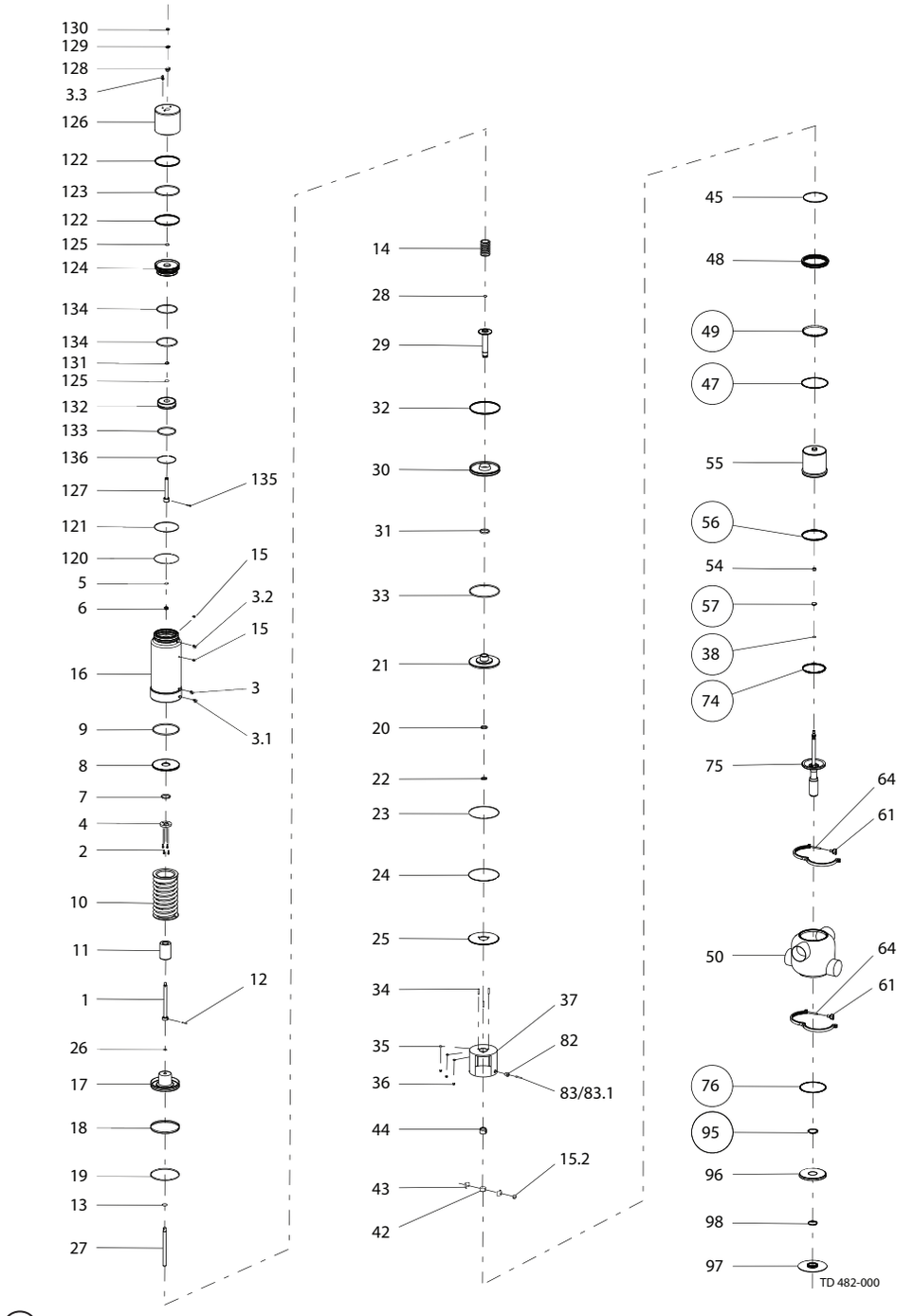
130
129
128
3.3
126
122
123
122
125
124
134
134
131
125
132
133
136
127
121
120
5
6
16
9
8
7
4
2
10
11
1
26
17
18
19
13
27
135
15
3.2
15
3
3.1
12
14
28
29
32
30
31
33
21
20
22
23
24
25
34
35
36
44
43
42
37
82
83/83.1
15.2
45
48
49
47
55
56
54
57
38
74
75
64
61
50
64
61
76
95
96
98
97
TD 482-000

◯ = Wear parts

Parts

Pos		Qty	Denomination	4" Seat ø143.9
			Cpl. Actuator	9613489072
1		1	Upper stem	9614072401
2		4	Screw	9611990144
3		1	Kit, air fitting and label, (blue, ThinkTop)	9611926026
		1	Kit, air fitting and label, (white, ThinkTop V-Series)	8010000754
3.1		1	Kit, air fitting and label, (red, ThinkTop)	9611926028
		1	Kit, air fitting and label, (blue, ThinkTop V-Series)	9611926026
3.2		1	Kit, air fitting and label, (yellow)	9611926027
3.3		1	Kit, air fitting and label, (blue, ThinkTop)	9611926026
		1	Kit, air fitting and label, (white, ThinkTop V-Series)	8010000754
4		1	Stop for upper piston	9613488301
5	•	1	O-ring, NBR	9611993499
6	•	1	Guide ring, Turcite	9613008408
7	•	1	O-ring, NBR	9611993514
8		1	Upper piston	9613005602
9	•	1	O-ring, NBR	9611993513
10		1	Spring assembly	9613025607
11		1	Distance spacer	9613010207
12		1	Pin	9611994199
13		1	Washer	9611993596
14		1	Spring assembly	9613009502
15		3	Plug	9613414101
16		1	Cylinder (3A marking)	9614053703
17		1	Main piston	9613015901
18	•	1	Guide ring, Turcite	9613008411
19	•	1	O-ring, NBR	9611993509
20	•	1	O-ring, NBR	9611993607
21		1	Bottom	9613016801
22	•	1	Guide ring, Turcite	9613008404
23	•	1	O-ring, NBR	22340675
24		1	Retaining ring	9613024804
25		1	Cover disk	9613005804
26		1	O-ring, NBR	9611993530
27		1	Inner stem	9613007305
28	•	1	O-ring	9611990030
29		1	Piston rod	9613006004
30		1	Lower piston	9613016601
31	•	1	O-ring, NBR	42153
32	•	1	Guide ring, Turcite	9613008407
33	•	1	O-ring, NBR	9611993510
34		3	Bolt	9611993618
35		3	Washer	9611993594
36		3	Nut	9611990360
42		1	Spindle liner	9613009001
43		2	Clamp	9613009201
44		1	Lock	9613009101

• Actuator service kits, part no. 9611926990

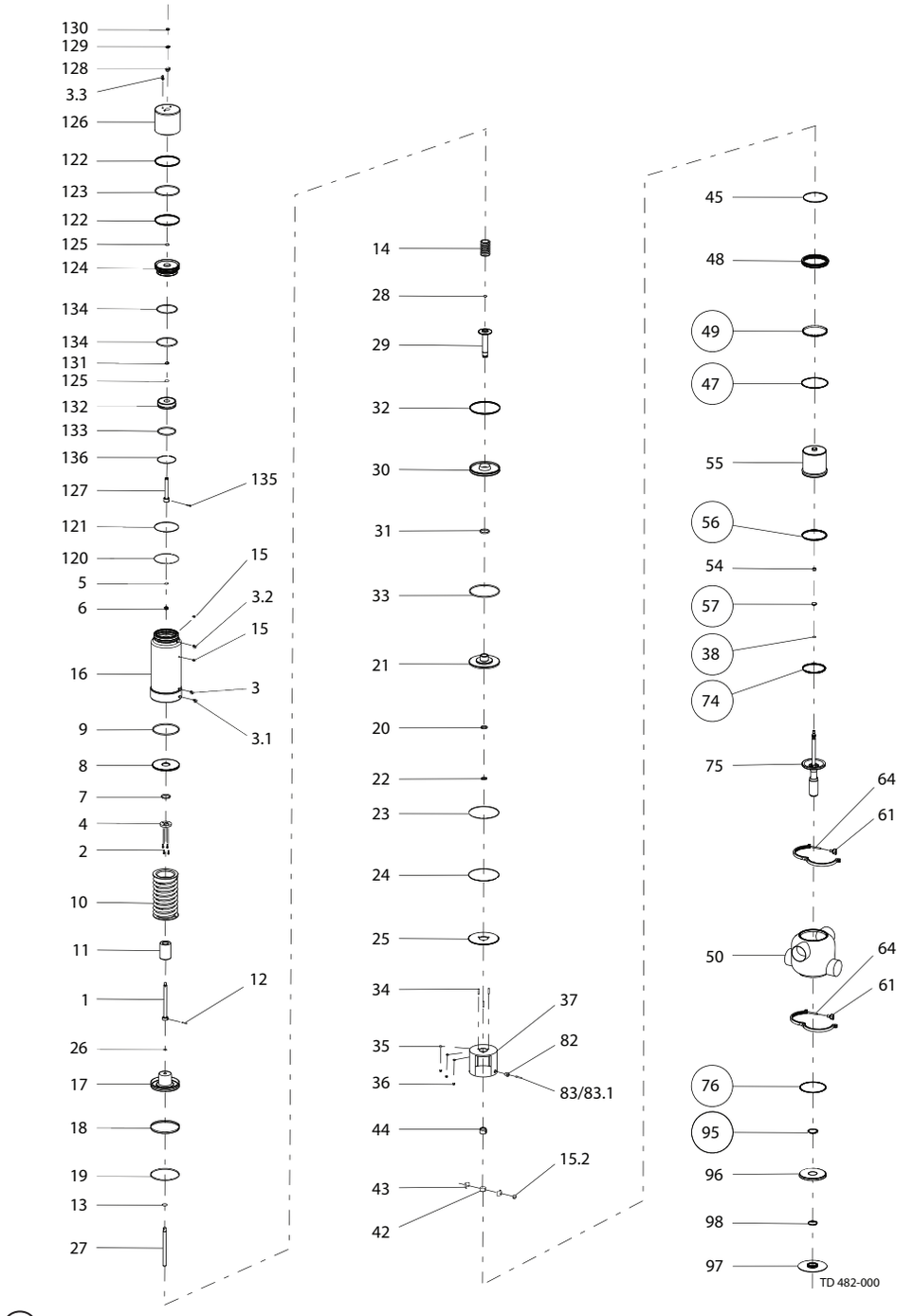
130
129
128
3.3
126
122
123
122
125
124
134
134
131
125
132
133
136
127
121
120
5
6
16
9
8
7
4
2
10
11
1
26
17
18
19
13
27
135
15
3.2
15
3
3.1
12
14
28
29
32
30
31
33
21
20
22
23
24
25
34
35
36
44
43
42
37
82
83/83.1
15.2
45
48
49
47
55
56
54
57
38
74
75
64
61
50
64
61
76
95
96
98
97
TD 482-000

◯ = Wear parts

Pos	Qty	Denomination	4" Seat ø143.9
45	1	Guide ring, PTFE	9613008421
48	1	Upper sealing element	9613071301
54	1	Guide ring, PTFE	9613008402
55	1	Upper plug	9613498201
61	2	Wingnut	9612558001
64	2	Clamp without nut	9613021801
75	1	Lower plug	9613495501
82 Δ	1	Bolt for indication	9613092604
83 Δ	1	Sensor for indication	9611995770
83.1	1	Cable for sensor for indication	9611994915
96	1	Lower sealing element, upper part	9613498101
97	1	Lower sealing element, lower part	9613498001
98	1	Guide ring, Turcite	9613466107
120	1	Lock ring	9613143203
121 ●	1	O-ring, NBR	9611992579
122 ●	2	Guide ring	9613008428
123 ●	1	O-ring, NBR	9611994283
124	1	Piston	9614072201
125 ●	2	O-ring, NBR	9611994300
126	1	Cylinder	9614058302
127	1	Upper stem, cpl.	9614072301
128 ●	1	Bushing	9613132801
129 ●	1	O-ring	9611994680
130 ●	1	O-ring	9611994300
131 ●	1	Guide ring	9613008424
132	1	Inner piston	9614072501
133 ●	1	O-ring	9611990033
134 ●	2	O-ring	9611990035
135	1	Screw	9611995302
136	1	Lock ring	9614072601

Note!

Δ Sensor service kit for valves delivered prior to October 2015 - 9611928352

900-574/5

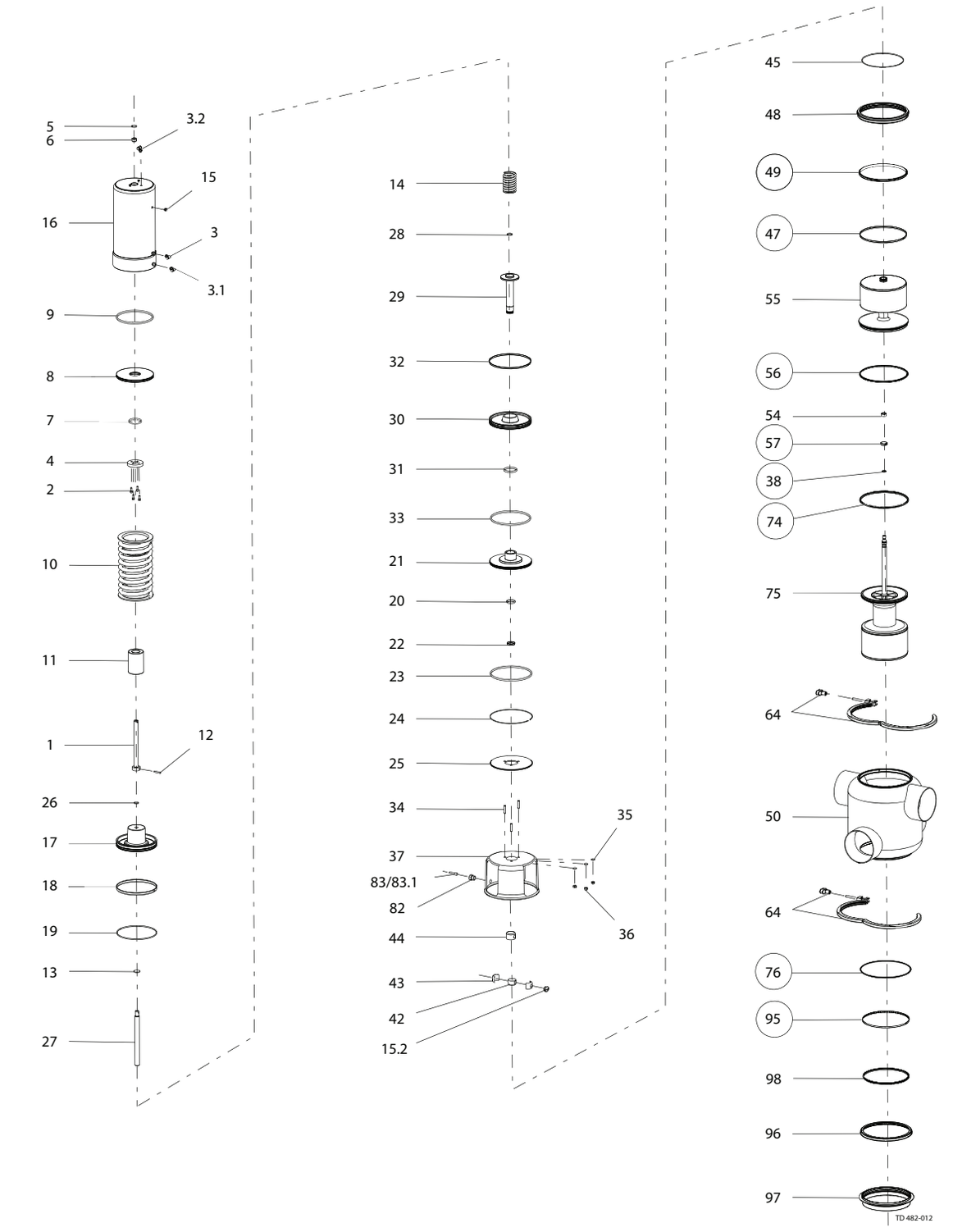
5
6
3.2
15
16
3
3.1
9
8
7
4
2
10
11
1
12
26
17
18
19
13
27
14
28
29
32
30
31
33
21
20
22
23
24
25
34
35
37
83/83.1
82
44
36
43
42
15.2
45
48
49
47
55
56
54
57
38
74
75
64
50
64
76
95
98
96
97
TD 482-012

◯ = Wear parts

Parts

Pos		Qty	Denomination	6" Seat ø206.1
			Cpl. Actuator	9613489020
1		1	Upper stem	9613007404
2		4	Screw	9611990144
3		1	Kit, air fitting and label, (blue, ThinkTop)	9611926026
		1	Kit, air fitting and label, (white, ThinkTop V-Series)	8010000754
3.1		1	Kit, air fitting and label, (red, ThinkTop)	9611926028
		1	Kit, air fitting and label, (blue, ThinkTop V-Series)	9611926026
3.2		1	Kit, air fitting and label, (yellow)	9611926027
4		1	Stop for upper piston	9613488301
5	•	1	O-ring, NBR	9611993499
6	•	1	Guide ring, Turcite	9613008408
7	•	1	O-ring, NBR	9611993514
8		1	Upper piston	9613005602
9	•	1	O-ring, NBR	9611993513
10		1	Spring assembly	9613025605
11		1	Distance spacer	9613010207
12		1	Pin	9611994199
13		1	Washer	9611993596
14		1	Spring assembly	9613009503
15		2	Plug	9613414101
16		1	Cylinder (3A marking)	9613015024
17		1	Main piston	9613015901
18	•	1	Guide ring, Turcite	9613008411
19	•	1	O-ring, NBR	9611993509
20	•	1	O-ring, NBR	9611993607
21		1	Bottom	9613016801
22	•	1	Guide ring, Turcite	9613008404
23	•	1	O-ring, NBR	22340675
24		1	Retaining ring	9613024804
25		1	Cover disk	9613005804
26		1	O-ring, NBR	9611993530
27		1	Inner stem	9613007305
28	•	1	O-ring	9611990030
29		1	Piston rod	9613006004
30		1	Lower piston	9613016601
31	•	1	O-ring, NBR	42153
32	•	1	Guide ring, Turcite	9613008407
33	•	1	O-ring, NBR	9611993510
34		3	Bolt	9611993618
35		3	Washer	9611993594
36		3	Nut	9611990360
42		1	Spindle liner	9613009001
43		2	Clamp	9613009201
44		1	Lock	9613009101

• Actuator service kits, part no. 9611926416

Pos		Qty	Denomination	
45		1	Guide ring, PTFE	9613008426
48		1	Upper sealing element	9613488001
54		1	Guide ring, PTFE	9613008402
55		1	Upper plug	9613486301
61		2	Wing nut	9613149501
64		2	Clamp	9613488401
75		1	Lower plug	9613494601
82	Δ	1	Bolt for indication	9613092604
83	Δ	1	Sensor for indication	9611995770
83.1		1	Cable for sensor for indication	9611994915
96		1	Lower sealing element, upper part	9613488101
97		1	Lower sealing element, lower part	9613488201
98		1	Guide ring, Turcite	9613466106

Note!

Δ Sensor service kit for valves delivered prior to October 2015 - 9611928352

1.7

Parts

Pos	Qty	Denomination	PMO 4" Seat ø143.9	PMO 6" Seat ø206.1
37	1	Intermediate piece	9613019319	9613496601
50	1	Valve body , 11-00	9613493301	9613492001
	1	Valve body , 12-00	9613493305	9613492005
	1	Valve body , 21-00	9613493307	9613492007
	1	Valve body , 22-00	9613493309	9613492009
	1	Valve body , 11-90	9613493302	9613492002
	1	Valve body , 12-90	9613493306	9613492006
	1	Valve body , 21-90	9613493308	9613492008
	1	Valve body , 22-90	9613493310	9613492010
	1	Valve body , 11-180	9613493303	9613492003
	1	Valve body , 11-270	9613493304	9613492004

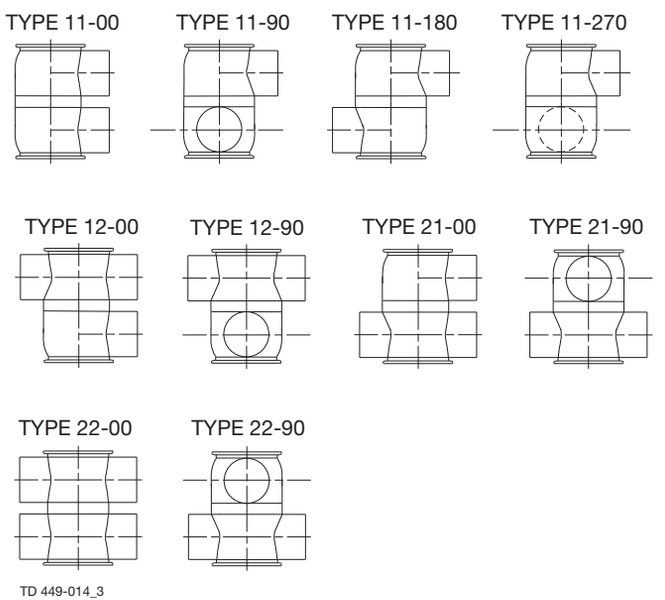

TD 449-014_3

Service kits for Product Wetted Parts

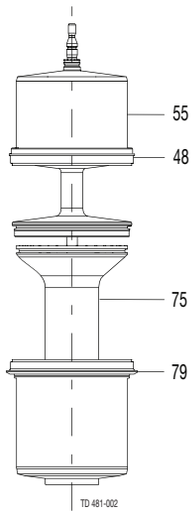

(Plug set-up 12)

PMO 4"

Service kit, NBR	9611926865
Service kit, EPDM	9611926866
Service kit, HNBR	9611926867
Service kit, FPM	9611926868

PMO 6"

Service kit, NBR	9611926857
Service kit, EPDM	9611926858
Service kit, HNBR	9611926859
Service kit, FPM	9611926860

1.7

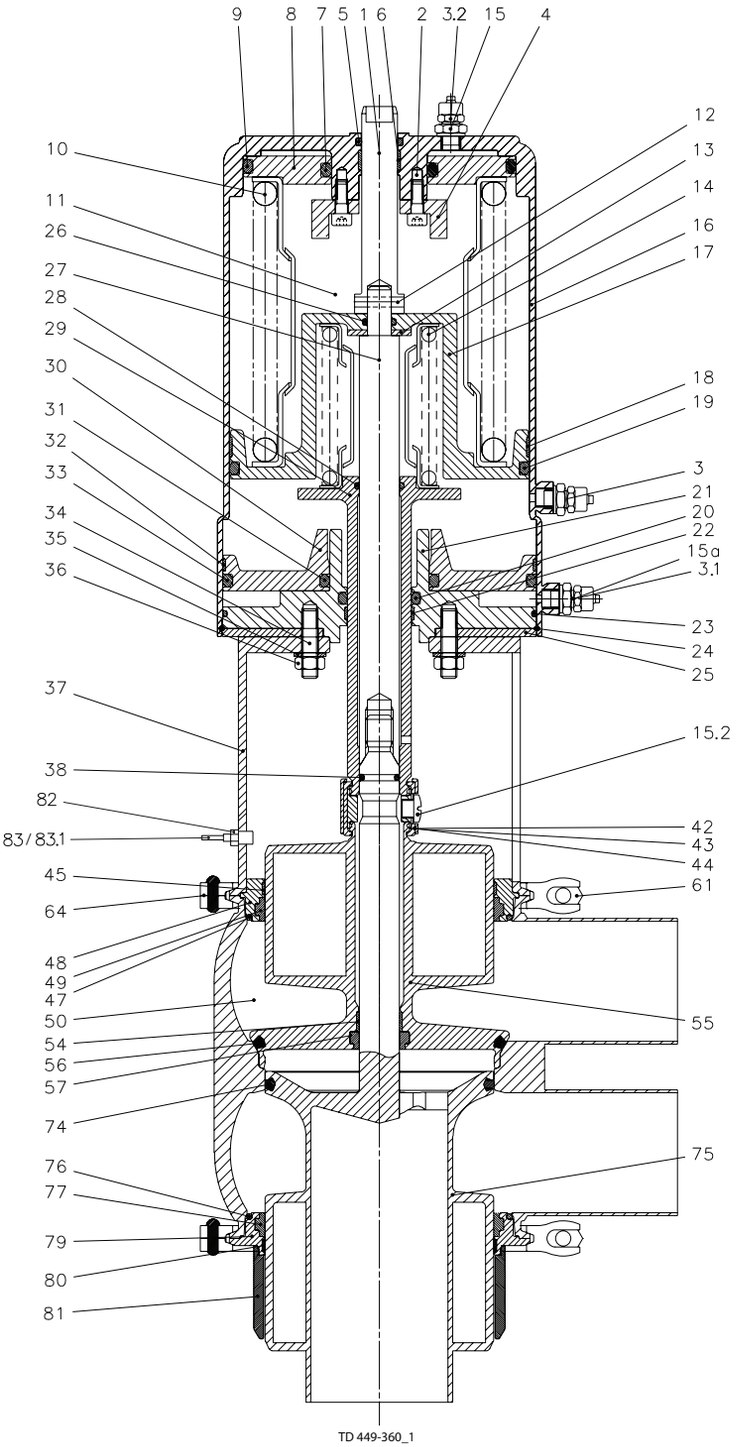
9
8
7
5
1
6
2
3.2
15
4
12
13
14
16
17
10
11
26
27
28
29
30
31
32
33
34
35
36
18
19
3
21
20
22
15a
3.1
23
24
25
37
38
82
83/83.1
45
64
48
49
47
50
54
56
57
74
76
77
79
80
81
15.2
42
43
44
61
55
75
TD 449-360_1

Wear Parts

Pos	Qty	Denomination	PMO 1½" Seat ø53.3*)	PMO 2" Seat ø81.3*)	PMO 2½" PMO 3" Seat ø115.3*)	PMO 4" Seat ø143.9*)	PMO 6" Seat ø206.1
38	1	O-ring, EPDM	9611993555	9611993555	9611993572	9611993572	9611993572
47	1	O-ring, , EPDM (Standard)	9611993628	9611993636	9611993640	9611993644	9611995003
	1	O-ring , NBR	9611993629	9611993637	9611993641	9611993645	9611995004
	1	O-ring, HNBR	9611993631	9611993639	9611993643	9611993647	9611995006
	1	O-ring, FPM	9611993630	9611993638	9611993642	9611993646	9611995005
49	1	Lip seal, EPDM (Standard)	9613008521	9613008526	9613008531	9613008536	9613008560
	1	Lip seal, NBR	9613008522	9613008527	9613008532	9613008537	9613008561
	1	Lip seal, HNBR	9613008524	9613008529	9613008534	9613008539	9613008563
	1	Lip seal , FPM	9613008523	9613008528	9613008533	9613008538	9613008562
56	1	Seal ring, EPDM (Standard)	9613095106	9613095109	9613095112	9613095123	9613095151
	1	Seal ring, , NBR	9613095114	9613095115	9613095116	9613095124	9613095152
	1	Seal ring , HNBR	9613095104	9613095107	9613095110	9613095121	9613095149
	1	Seal ring , FPM	9613095105	9613095108	9613095111	9613095122	9613095150
57	1	Lip seal, EPDM (Standard)	9613008706	9613008711	9613008711	9613008711	9613008711
	1	Lip seal, NBR	9613008707	9613008712	9613008712	9613008712	9613008712
	1	Lip seal, HNBR	9613008709	9613008714	9613008714	9613008714	9613008714
	1	Lip seal, FPM	9613008708	9613008713	9613008713	9613008713	9613008713
74	1	Seal ring, EPDM (Standard)	9613095206	9613095209	9613095212	9613095223	9613095247
	1	Seal ring, NBR	9613095214	9613095215	9613095216	9613095224	9613095248
	1	Seal ring, HNBR	9613095204	9613095207	9613095210	9613095221	9613095245
	1	Seal ring, FPM Alfa Laval recommends EPDM	9613095205	9613095208	9613095211	9613095222	9613095246
76	1	O-ring, EPDM (Standard)	9611993628	9611993636	9611993640	9611993644	9611995003
	1	O-ring, NBR	9611993629	9611993637	9611993641	9611993645	9611995004
	1	O-ring , HNBR	9611993631	9611993639	9611993643	9611993647	9611995006
	1	O-ring , FPM	9611993630	9611993638	9611993642	9611993646	9611995005
77	1	Lip seal, EPDM (Standard)	9613008554	9613008526	9613008531	9613008536	9613008560
	1	Lip seal , NBR	9613008555	9613008527	9613008532	9613008537	9613008561
	1	Lip seal, HNBR	9613008557	9613008529	9613008534	9613008539	9613008563
	1	Lip seal, FPM	9613008556	9613008528	9613008533	9613008538	9613008562

NOTE!
All FPM service kits are supplied with EPDM seal ring, pos. 74.

NOTE!
*) From January 1st 2019, this valve size is not manufactured anymore. Spare parts will still be available.

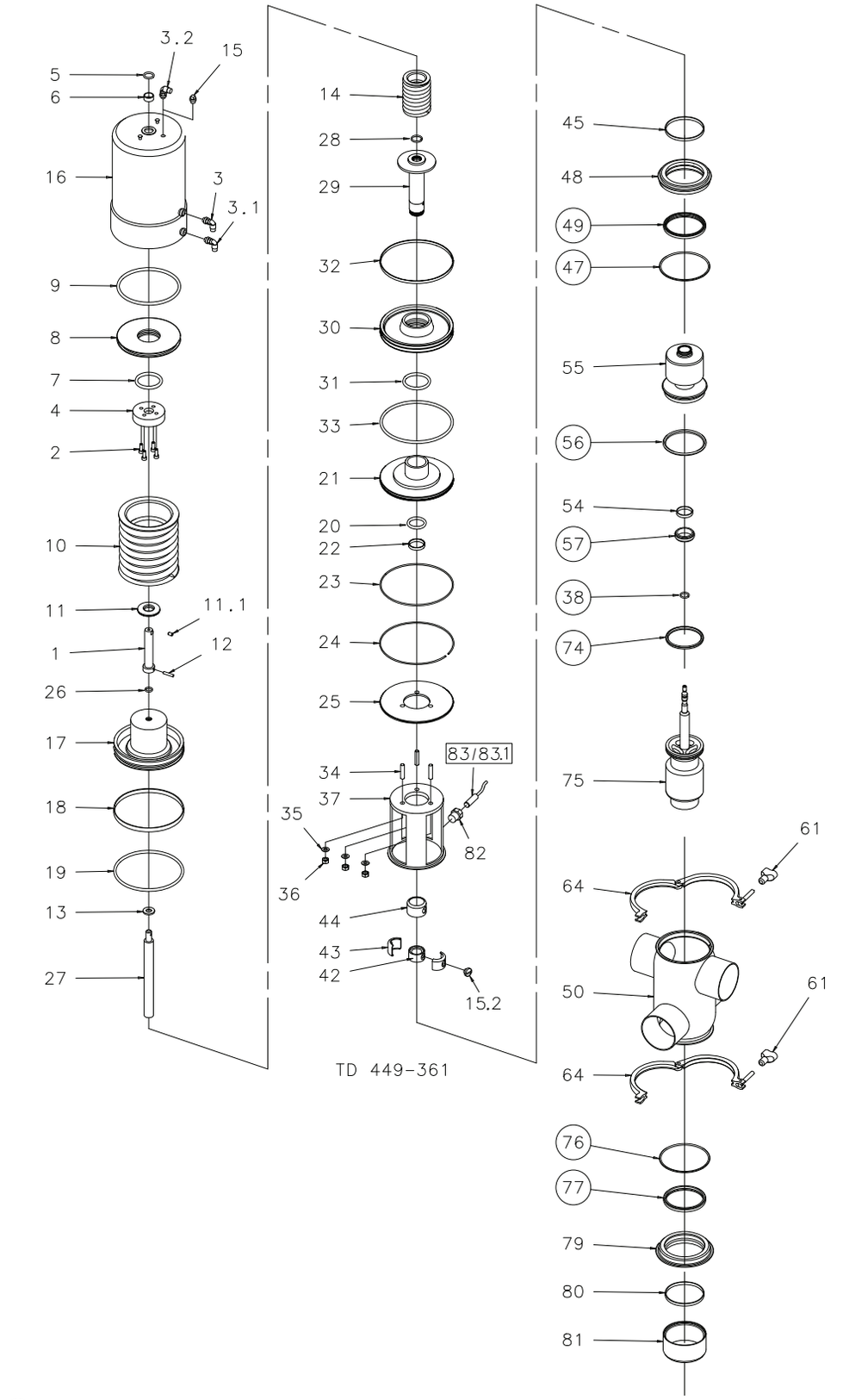
3.2
15
5
6
16
3
3.1
9
8
7
4
2
10
11
11.1
1
12
26
17
18
19
13
27
14
28
29
32
30
31
33
21
20
22
23
24
25
34
37
35
36
44
43
42
15.2
83/83.1
82
45
48
49
47
55
56
54
57
38
74
75
61
64
50
61
64
76
77
79
80
81
TD 449-361

◯ = Wear parts

Parts

Pos		Qty	Denomination	PMO 1½" Seat ø53.3*)	PMO 2" Seat ø81.3*)	PMO 2½" Seat ø115.3*)	PMO 3" Seat ø115.3*)	PMO 4" Seat ø143.9*)	PMO 6" Seat ø206.1
			Cpl. Actuator	9613055480	9613055468	9613099509	9613099509	9613083769	9613489012
1		1	Upper stem	9613010102	9613010102	9613007401	9613007401	9613007402	9613007404
2		4	Screw			9611993342	9611993342	9611993342	9611990144
3		1	Kit, air fitting and label, (blue, ThinkTop)	9611926026	9611926026	9611926026	9611926026	9611926026	9611926026
		1	Kit, air fitting and label, (white, ThinkTop V-Series)	8010000754	8010000754	8010000754	8010000754	8010000754	8010000754
3.1		1	Kit, air fitting and label, (red, ThinkTop)	9611926028	9611926028	9611926028	9611926028	9611926028	9611926028
		1	Kit, air fitting and label, (blue, ThinkTop V-Series)	9611926026	9611926026	9611926026	9611926026	9611926026	9611926026
3.2		1	Kit, air fitting and label, (yellow)	9611926027	9611926027	9611926027	9611926027	9611926027	9611926027
4		1	Stop for upper piston			9613005301	9613005301	9613005302	9613488301
5	•	1	O-ring, NBR	9611993499	9611993499	9611993499	9611993499	9611993499	9611993499
6	•	1	Guide ring, Turcite	9613008408	9613008408	9613008408	9613008408	9613008408	9613008408
7	•	1	O-ring, NBR			9611993514	9611993514	9611993514	9611993514
8		1	Upper piston			9613005601	9613005601	9613005602	9613005602
9	•	1	O-ring, NBR			9611993512	9611993512	9611993513	9611993513
10		1	Spring assembly	9613012501	9613012501	9613007501	9613007501	9613025603	9613025605
11		1	Distance spacer	9613010202	9613010202				9613010207
11.1		1	Screw	9611991763	9611991763				
12		1	Pin	9611994197	9611994197	9611994198	9611994198	9611994199	9611994199
13		1	Washer	9611993594	9611993594	9611993595	9611993595	9611993596	9611993596
14		1	Spring assembly	9613013101	9613013102	9613009502	9613009502	9613009502	9613009503
15		1	Plug	9613414101	9613414101	9613414101	9613414101	9613414101	9613414101
16		1	Cylinder (3A marking)	9613012611	9613012611	9613005111	9613005111	9613015016	9613015022
17		1	Main piston	9613013201	9613013201	9613005701	9613005701	9613015901	9613015901
18	•	1	Guide ring, Turcite	9613008409	9613008409	9613008410	9613008410	9613008411	9613008411
19	•	1	O-ring, NBR	9611993505	9611993505	9611993507	9611993507	9611993509	9611993509
20	•	1	O-ring, NBR	9611993503	9611993503	9611993607	9611993607	9611993607	9611993607
21		1	Bottom	9613014001	9613014001	9613005401	9613005401	9613016801	9613016801
22	•	1	Guide ring, Turcite	9613008403	9613008403	9613008404	9613008404	9613008404	9613008404
23	•	1	O-ring, NBR	9611992228	9611992228	9611991489	9611991489	22340675	22340675
24		1	Retaining ring	9613024802	9613024802	9613024803	9613024803	9613024804	9613024804
25		1	Cover disk	9613005802	9613005802	9613005803	9613005803	9613005804	9613005804
26		1	O-ring, NBR	9611993528	9611993528	9611993495	9611993495	9611993530	9611993530
27		1	Inner stem	9613010602	9613010603	9613007303	9613007303	9613007302	9613007305
28	•	1	O-ring	9611993495	9611993495	9611990030	9611990030	9611990030	9611990030
29		1	Piston rod	9613013401	9613013402	9613006002	9613006002	9613006002	9613006004
30		1	Lower piston	9613013801	9613013801	9613005501	9613005501	9613016601	9613016601
31	•	1	O-ring, NBR	42153	42153	42153	42153	42153	42153
32	•	1	Guide ring, Turcite	9613008405	9613008405	9613008406	9613008406	9613008407	9613008407
33	•	1	O-ring, NBR	22341275	22341275	9611993508	9611993508	9611993510	9611993510
34		3	Bolt	9611993618	9611993618	9611993618	9611993618	9611993618	9611993618
35		3	Washer	9611993594	9611993594	9611993594	9611993594	9611993594	9611993594
36		3	Nut	9611990360	9611990360	9611990360	9611990360	9611990360	9611990360
42		1	Spindle liner	9613011601	9613033501	9613009001	9613009001	9613009001	9613009001
43		2	Clamp	9613011801	9613033601	9613009201	9613009201	9613009201	9613009201
44		1	Lock	9613011701	9613009102	9613009101	9613009101	9613009101	9613009101

Actuator diameter	Ø120	Ø157	Ø186
Actuator type	3	4BS	4SS, 5BS, 5SS
Connection size*	DN/OD 1½"-2"*	DN/OD 2½"-3"*	DN/OD 4"-6"*
• Actuator service kit, part no.	9611926414	9611926415	9611926416

Pos		Qty	Denomination						
45		1	Guide ring, PTFE	9613008413	9613008414	9613008415	9613008415	9613008421	9613008426
48		1	Upper sealing element	9613490401	9613006404	9613018804	9613018804	9613071301	9613488001
54		1	Guide ring, PTFE	9613008401	9613008402	9613008402	9613008402	9613008402	9613008402
55		1	Upper plug	9613489801	9613458601	9613458701	9613458703	9613458801	9613486301
61		2	Wingnut	9612558001	9612558001	9612558001	9612558001	9612558001	9613149501
64		2	Clamp without nut	9613021501	9613021601	9613021701	9613021701	9613021801	9613488401
75		1	Lower plug	9613490601	9613070501	9613070601		9613070801	9613496501
79		1	Lower sealing element	9613490001	9613024104	9613024304	9613024304	9613071501	9613489101
80		1	Guide ring, PTFE	9613008427	9613008414	9613008415	9613008415	9613008421	9613008426
81		1	Cover	9613049026	9613049006	9613049007	9613049007	9613049016	9613049025
82	Δ	1	Bolt for indication	9613490102	9613092604	9613092604	9613092604	9613092604	9613092604
83	Δ	1	Sensor for indication	9611995770	9611995770	9611995770	9611995770	9611995770	9611995770

83.1	1	Cable for sensor for indication	9611994915	9611994915	9611994915	9611994915	9611994915	9611994915

NOTE!

Δ Sensor service kit for 1½" valves delivered prior to October 2015 - 9611928353

Δ Sensor service kit for 2" - 6" valves delivered prior to October 2015 - 9611928352

NOTE!

*) From January st 2019, this valve size is not manufactured anymore. Spare parts will still be available.

900-547/8

Parts

Pos	Qty	Denomination	PMO 1½" Seat ø53.3*)	PMO 2" Seat ø81.3*)	PMO 2½" Seat ø115.3*)	PMO 3" Seat ø115.3*)	PMO 4" Seat ø143.9*)	PMO 6" Seat ø206.1
37	1	Intermediate piece	9613015609	9613019121	9613019215	9613019213	9613019317	9613496601
50	1	Valve body, 11-00	9613489201	9613070901	9613071001	9613071101	9613071201	9613484801
	1	Valve body, 12-00	9613489205	9613070905	9613071005	9613071105	9613071205	9613484805
	1	Valve body, 21-00	9613489207	9613070907	9613071007	9613071107	9613071207	9613484807
	1	Valve body, 22-00	9613489209	9613070909	9613071009	9613071109	9613071209	9613484809
	1	Valve body, 11-90	9613489202	9613070902	9613071002	9613071102	9613071202	9613484802
	1	Valve body, 12-90	9613489206	9613070906	9613071006	9613071106	9613071206	9613484806
	1	Valve body, 21-90	9613489208	9613070908	9613071008	9613071108	9613071208	9613484808
	1	Valve body, 22-90	9613489210	9613070910	9613071010	9613071110	9613071210	9613484810
	1	Valve body, 11-180	9613489203	9613070903	9613071003	9613071103	9613071203	9613484803
	1	Valve body, 11-270	9613489204	9613070904	9613071004	9613071104	9613071204	9613484804

NOTE!

*) From January 1st 2019, this valve size is not manufactured anymore. Spare parts will still be available.

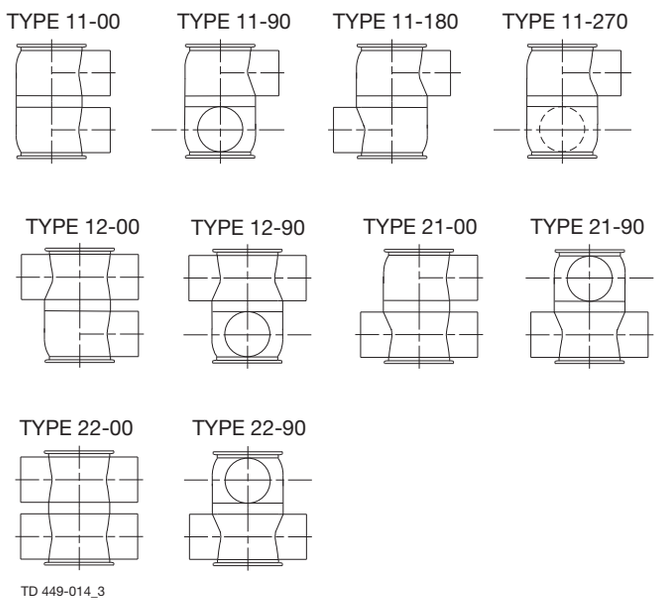

Service kits for Product Wetted Parts

Plug set-up

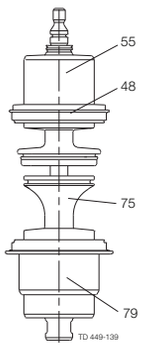

(Plug set-up 12)

PMO 1.5" *)

Service kit, NBR	9611926845
Service kit, EPDM	9611926846
Service kit, HNBR	9611926847
Service kit, FPM	9611926848

PMO 2" *)

Service kit, NBR	9611926016
Service kit, EPDM	9611926013
Service kit, HNBR	9611926022
Service kit, FPM	9611926019

PMO 2.5"+3" *)

Service kit, NBR	9611926017
Service kit, EPDM	9611926014
Service kit, HNBR	9611926023
Service kit, FPM	9611926020

PMO 4" *)

Service kit, NBR	9611926018
Service kit, EPDM	9611926015
Service kit, HNBR	9611926024
Service kit, FPM	9611926021

PMO 6"

Service kit, NBR	9611926849
Service kit, EPDM	9611926850
Service kit, HNBR	9611926851
Service kit, FPM	9611926852

NOTE!
All FPM service kits are supplied with EPDM seal ring, pos. 74.

NOTE!
*) From January 1st 2019, this valve size is not manufactured anymore. Spare parts will still be available.

Rebuilding Set PMO Plus to PMO Plus CP

1.7

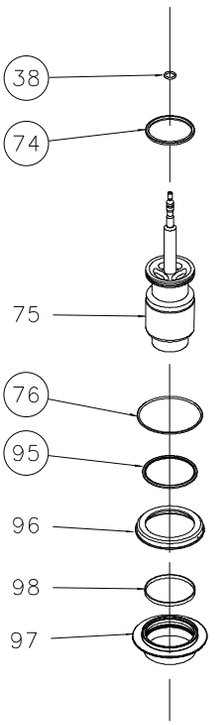

TD 449-362

Rebuilding Set PMO Plus to PMO Plus CP

Pos	Qty	Denomination	PMO 1½" Seat ø53.3*)	PMO 2" Seat ø81.3*)	PMO 2½" Seat ø115.3*)	PMO 3" Seat ø115.3*)	PMO 4" Seat ø143.9*)	PMO 6" Seat ø206.1
		Lower plug, cpl., NBR	9613466273	9613466217	9613466218	9613466219	9613466220	9613466274
		Lower plug, cpl., EPDM	9613466275	9613466221	9613466222	9613466223	9613466224	9613466276
		Lower plug, cpl., HNBR	9613466277	9613466225	9613466226	9613466227	9613466228	9613466278
		Lower plug, cpl., FPM	9613466279	9613466229	9613466230	9613466231	9613466232	9613466280

Pos	Qty	Denomination
38	1	O-ring
74	1	Seal ring
75	1	Lower plug
76	1	O-ring
95	1	Special lip seal
96	1	Lower sealing element, upper part
97	1	Lower sealing element, lower part
98	1	Guide ring

NOTE!

*) From January 1st 2019, this valve size is not manufactured anymore. Spare parts will still be available.

1.7

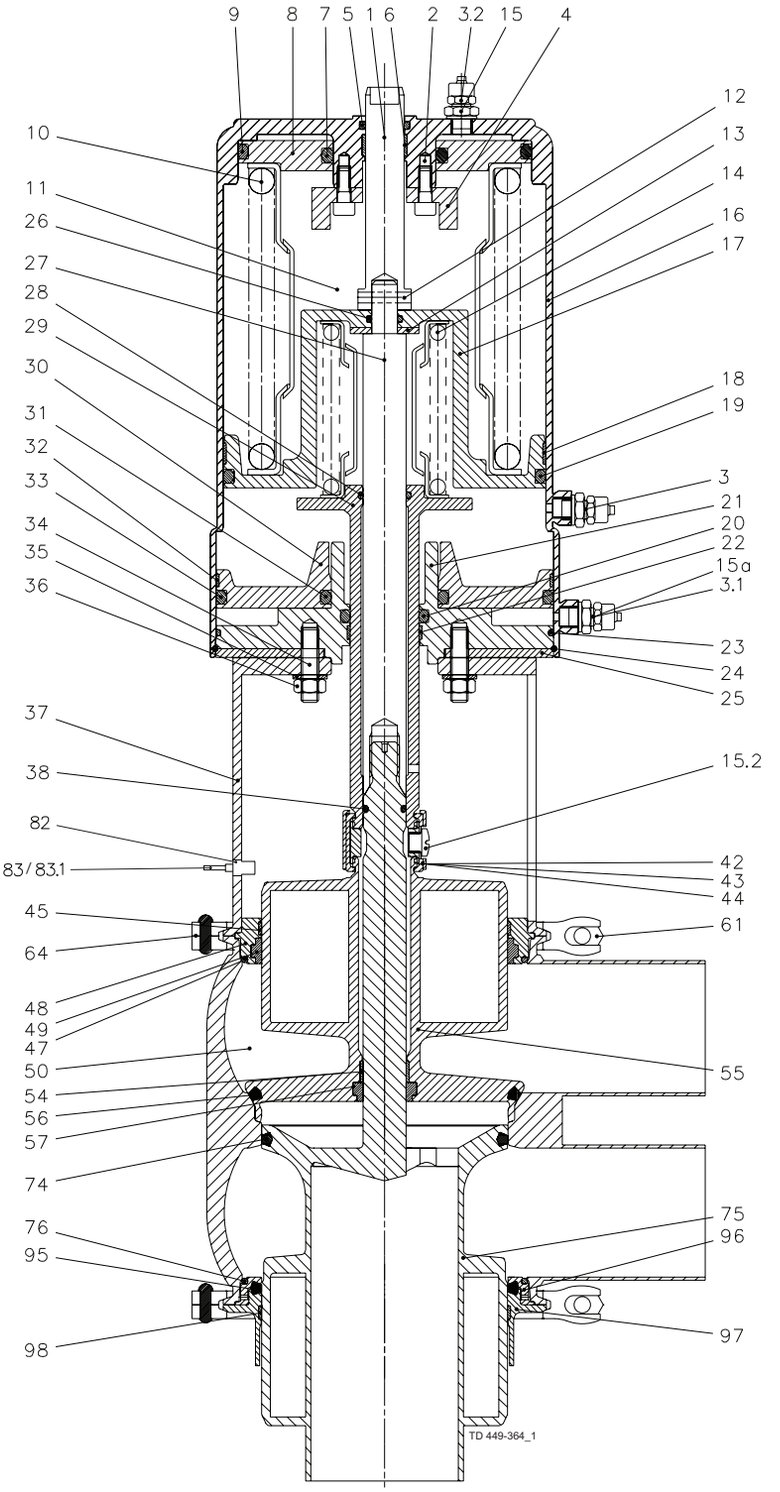
9
8
7
5
1
6
2
3.2
15
4
12
13
14
16
17
10
11
26
27
28
29
30
31
32
33
34
35
36
18
19
3
21
20
22
15a
3.1
23
24
25
37
38
82
83/83.1
15.2
42
43
44
61
45
64
48
49
47
50
54
56
57
74
55
75
96
76
95
98
97
TD 449-364_1

Wear Parts

Pos	Qty	Denomination	PMO 1½" Seat ø53.3*)	PMO 2" Seat ø81.3*)	PMO 2½" PMO 3" Seat ø115.3*)	PMO 4" Seat ø143.9*)	PMO 6" Seat ø206.1
38	1	O-ring, EPDM	9611993555	9611993555	9611993572	9611993572	9611993572
47	1	O-ring, EPDM (Standard)	9611993628	9611993636	9611993640	9611993644	9611995003
	1	O-ring, NBR	9611993629	9611993637	9611993641	9611993645	9611995004
	1	O-ring, HNBR	9611993630	9611993639	9611993643	9611993647	9611995006
	1	O-ring, FPM	9611993631	9611993638	9611993642	9611993646	9611995005
49	1	Lip seal, EPDM (Standard)	9613008521	9613008526	9613008531	9613008536	9613008560
	1	Lip seal, NBR	9613008522	9613008527	9613008532	9613008537	9613008561
	1	Lip seal, HNBR	9613008524	9613008529	9613008534	9613008539	9613008563
	1	Lip seal, FPM	9613008523	9613008528	9613008533	9613008538	9613008562
56	1	Seal ring , EPDM (Standard)	9613095106	9613095109	9613095112	9613095123	9613095151
	1	Seal ring, NBR	9613095114	9613095115	9613095116	9613095124	9613095152
	1	Seal ring, HNBR	9613095104	9613095107	9613095110	9613095121	9613095149
	1	Seal ring, FPM	9613095105	9613095108	9613095111	9613095122	9613095150
57	1	Lip seal, EPDM (Standard)	9613008706	9613008711	9613008711	9613008711	9613008711
	1	Lip seal, NBR	9613008707	9613008712	9613008712	9613008712	9613008712
	1	Lip seal, HNBR	9613008709	9613008714	9613008714	9613008714	9613008714
	1	Lip seal, FPM	9613008708	9613008713	9613008713	9613008713	9613008713
74	1	Seal ring, EPDM (Standard)	9613095206	9613095209	9613095212	9613095223	9613095247
	1	Seal ring, NBR	9613095214	9613095215	9613095216	9613095224	9613095248
	1	Seal ring, HNBR	9613095204	9613095207	9613095210	9613095221	9613095245
	1	Seal ring, FPM - Alfa Laval recommends EPDM	9613095205	9613095208	9613095211	9613095222	9613095246
76	1	O-ring, EPDM (Standard)	9611993628	9611993636	9611993640	9611993644	9611995003
	1	O-ring, NBR	9611993629	9611993637	9611993641	9611993645	9611995004
	1	O-ring, HNBR	9611993630	9611993639	9611993643	9611993647	9611995006
	1	O-ring, FPM	9611993631	9611993638	9611993642	9611993646	9611995005
95	1	Special lip seal, EPDM (standard)	9613464243	9613464203	9613464207	9613464211	9613464247
	1	Special lip seal, NBR	9613464244	9613464204	9613464208	9613464212	9613464248
	1	Special lip seal, HNBR	9613464241	9613464201	9613464205	9613464209	9613464245
	1	Special lip seal, FPM	9613464242	9613464202	9613464206	9613464210	9613464246

NOTE!
All FPM service kits are supplied with EPDM seal ring, pos. 74.

NOTE!
*) From January 1st 2019, this valve size is not manufactured anymore. Spare parts will still be available.

Parts

1.7

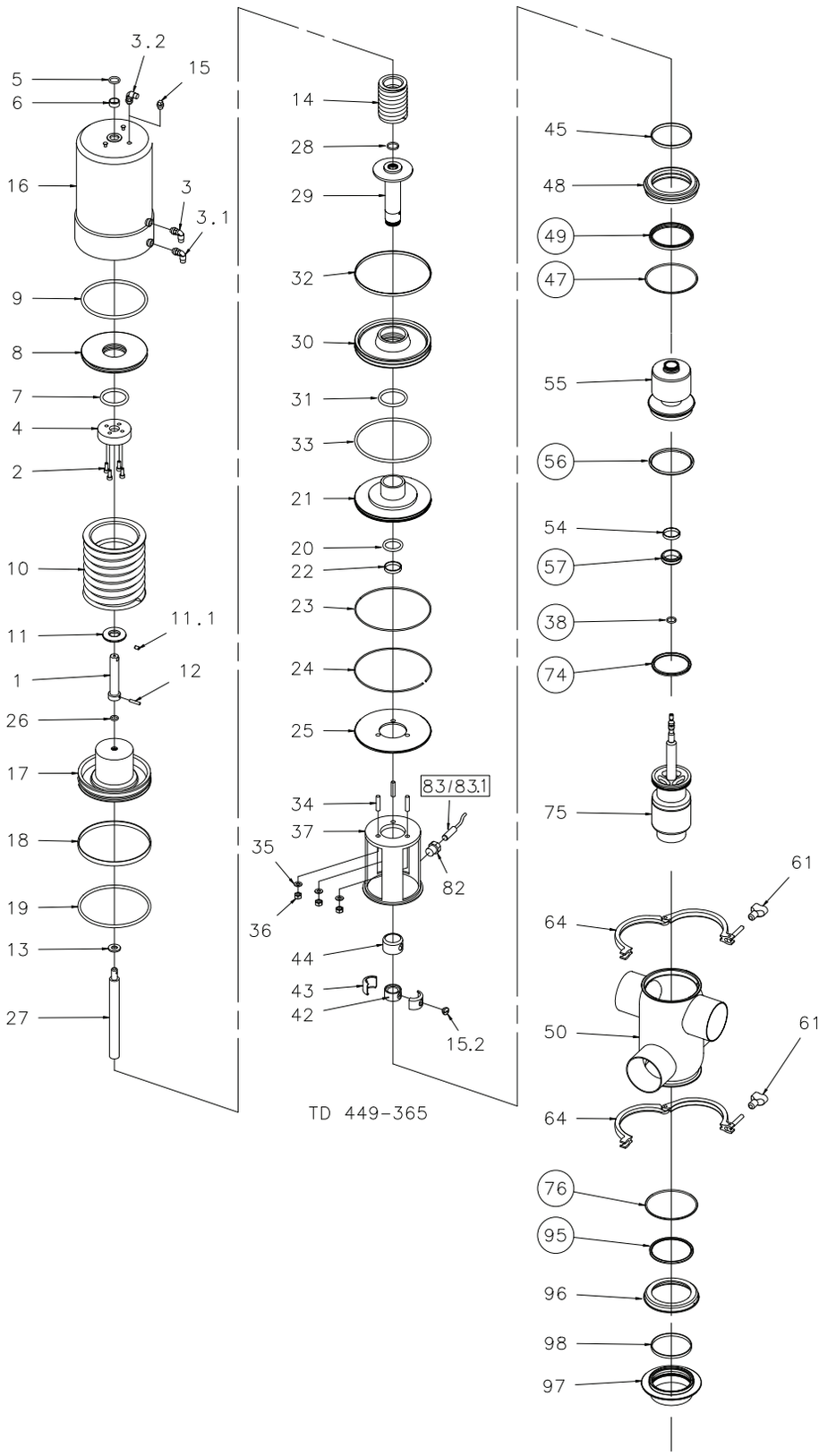

◯ = Wear parts

Parts

Pos	Qty	Denomination	PMO 1½" Seat ø53.3*)	PMO 2" Seat ø81.3*)	PMO 2.5" Seat ø115.3*)	PMO 3" Seat ø115.3*)	PMO 4" Seat ø143.9*)	PMO 6" Seat ø206.1
		Cpl. Actuator	9613055480	9613055468	9613099509	9613099509	9613083769	9613489012
1	1	Upper stem	9613010102	9613010102	9613007401	9613007401	9613007402	9613007404
2	4	Screw			9611993342	9611993342	9611993342	9611990144
3	1	Kit, air fitting and label, (blue, ThinkTop)	9611926026	9611926026	9611926026	9611926026	9611926026	9611926026
	1	Kit, air fitting and label, (white, ThinkTop V-Series)	8010000754	8010000754	8010000754	8010000754	8010000754	8010000754
3.1	1	Kit, air fitting and label, (red, ThinkTop)	9611926028	9611926028	9611926028	9611926028	9611926028	9611926028
	1	Kit, air fitting and label, (blue, ThinkTop V-Series)	9611926026	9611926026	9611926026	9611926026	9611926026	9611926026
3.2	1	Kit, air fitting and label, (yellow)	9611926027	9611926027	9611926027	9611926027	9611926027	9611926027
4	1	Stop for upper piston			9613005301	9613005301	9613005302	9613488301
5	1	O-ring, NBR	9611993499	9611993499	9611993499	9611993499	9611993499	9611993499
6	1	Guide ring, Turcite	9613008408	9613008408	9613008408	9613008408	9613008408	9613008408
7	1	O-ring, NBR			9611993514	9611993514	9611993514	9611993514
8	1	Upper piston			9613005601	9613005601	9613005602	9613005602
9	1	O-ring, NBR			9611993512	9611993512	9611993513	9611993513
10	1	Spring assembly	9613012501	9613012501	9613007501	9613007501	9613025603	9613025605
11	1	Distance spacer	9613010202	9613010202				9613010207
11.1	1	Screw	9611991763	9611991763				
12	1	Pin	9611994197	9611994197	9611994198	9611994198	9611994199	9611994199
13	1	Washer	9611993594	9611993594	9611993595	9611993595	9611993596	9611993596
14	1	Spring assembly	9613013101	9613013102	9613009502	9613009502	9613009502	9613009503
15	1	Plug	9613414101	9613414101	9613414101	9613414101	9613414101	9613414101
16	1	Cylinder (3A marking)	9613012611	9613012611	9613005111	9613005111	9613015016	9613015022
17	1	Main piston	9613013201	9613013201	9613005701	9613005701	9613015901	9613015901
18	1	Guide ring, Turcite	9613008409	9613008409	9613008410	9613008410	9613008411	9613008411
19	1	O-ring, NBR	9611993505	9611993505	9611993507	9611993507	9611993509	9611993509
20	1	O-ring, NBR	9611993503	9611993503	9611993607	9611993607	9611993607	9611993607
21	1	Bottom	9613014001	9613014001	9613005401	9613005401	9613016801	9613016801
22	1	Guide ring, Turcite	9613008403	9613008403	9613008404	9613008404	9613008404	9613008404
23	1	O-ring, NBR	9611992228	9611992228	9611991489	9611991489	22340675	22340675
24	1	Retaining ring	9613024802	9613024802	9613024803	9613024803	9613024804	9613024804
25	1	Cover disk	9613005802	9613005802	9613005803	9613005803	9613005804	9613005804
26	1	O-ring, NBR	9611993528	9611993528	9611993495	9611993495	9611993530	9611993530
27	1	Inner stem	9613010602	9613010603	9613007303	9613007303	9613007302	9613007305
28	1	O-ring	9611993495	9611993495	9611990030	9611990030	9611990030	9611990030
29	1	Piston rod	9613013401	9613013402	9613006002	9613006002	9613006002	9613006004
30	1	Lower piston	9613013801	9613013801	9613005501	9613005501	9613016601	9613016601
31	1	O-ring, NBR	42153	42153	42153	42153	42153	42153
32	1	Guide ring, Turcite	9613008405	9613008405	9613008406	9613008406	9613008407	9613008407
33	1	O-ring, NBR	22341275	22341275	9611993508	9611993508	9611993510	9611993510
34	3	Bolt	9611993618	9611993618	9611993618	9611993618	9611993618	9611993618
35	3	Washer	9611993594	9611993594	9611993594	9611993594	9611993594	9611993594
36	3	Nut	9611990360	9611990360	9611990360	9611990360	9611990360	9611990360
42	1	Spindle liner	9613011601	9613033501	9613009001	9613009001	9613009001	9613009001
43	2	Clamp	9613011801	9613033601	9613009201	9613009201	9613009201	9613009201
44	1	Lock	9613011701	9613009102	9613009101	9613009101	9613009101	9613009101

Actuator diameter	Ø120	Ø157	Ø186
Actuator type	3	4BS	4SS, 5BS, 5SS
Connection size*	DN/OD 1½"-2"*	DN/OD 2½-3*	DN/OD 4-6*
• Actuator service kit, part no.	9611926414	9611926415	9611926416

Pos	Qty	Denomination				
45	1	Guide ring, PTFE	9613008413	9613008414	9613008415	9613008415
48	1	Upper sealing element	9613490401	9613006404	9613018804	9613018804
54	1	Guide ring, PTFE	9613008401	9613008402	9613008402	9613008402
55	1	Upper plug	9613489801	9613458601	9613458701	9613458703
61	2	Wingnut	9612558001	9612558001	9612558001	9612558001
64	2	Clamp without nut	9613021501	9613021601	9613021701	9613021701
75	1	Lower plug	9613491001	9613465801	9613465802	9613465803
82 Δ	1	Bolt for indication	9613490102	9613092604	9613092604	9613092604
83 Δ	1	Sensor for indication	9611995770	9611995770	9611995770	9611995770
83.1	1	Cable for sensor for indication	9611994915	9611994915	9611994915	9611994915
96	1	Lower sealing element, upper part	9613490201	9613465201	9613465401	9613465401
97	1	Lower sealing element, lower part	9613490301	9613465301	9613465501	9613465501
98	1	Guide ring, Turcite	9613466107	9613466101	9613466102	9613466102

NOTE!
Δ Sensor service kit for 1½" valves delivered prior to October 2015 - 9611928353
Δ Sensor service kit for 2" - 6" valves delivered prior to October 2015 - 9611928352

NOTE!
*) From January 1st 2019, this valve size is not manufactured anymore. Spare parts will still be available.

900-543/8

Parts

Pos	Qty	Denomination	PMO 1½" Seat ø53.3*)	PMO 2" Seat ø81.3*)	PMO 2.5" Seat ø115.3*)	PMO 3" Seat ø115.3*)	PMO 4" Seat ø143.9*)	PMO 6" Seat ø206.1
37	1	Intermediate piece	9613015609	9613019121	9613019215	9613019213	9613019317	9613496601
50	1	Valve body, 11-00	9613489201	9613070901	9613071001	9613071101	9613071201	9613484801
	1	Valve body, 12-00	9613489205	9613070905	9613071005	9613071105	9613071205	9613484805
	1	Valve body, 21-00	9613489207	9613070907	9613071007	9613071107	9613071207	9613484807
	1	Valve body, 22-00	9613489209	9613070909	9613071009	9613071109	9613071209	9613484809
	1	Valve body, 11-90	9613489202	9613070902	9613071002	9613071102	9613071202	9613484802
	1	Valve body, 12-90	9613489206	9613070906	9613071006	9613071106	9613071206	9613484806
	1	Valve body, 21-90	9613489208	9613070908	9613071008	9613071108	9613071208	9613484808
	1	Valve body, 22-90	9613489210	9613070910	9613071010	9613071110	9613071210	9613484810
	1	Valve body, 11-180	9613489203	9613070903	9613071003	9613071103	9613071203	9613484803
	1	Valve body, 11-270	9613489204	9613070904	9613071004	9613071104	9613071204	9613484804

NOTE!
*) From January 1st 2019, this valve size is not manufactured anymore. Spare parts will still be available.

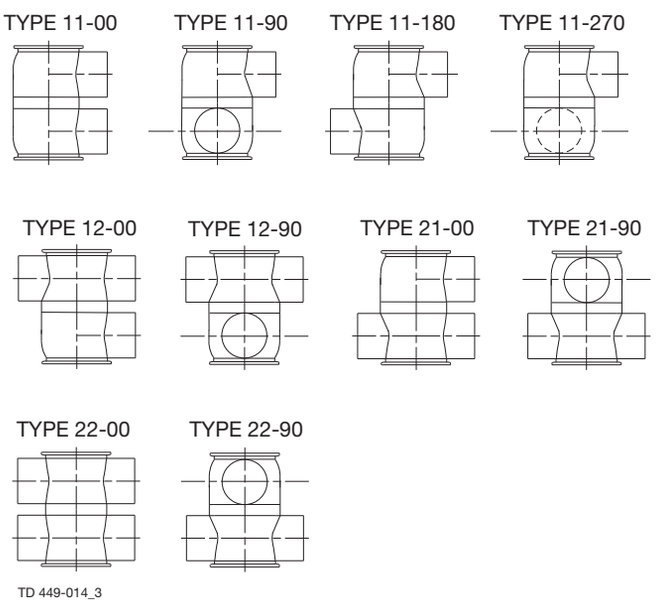

TD 449-014_3

Service kits for Product Wetted Parts

Plug set-up

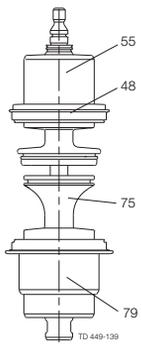

(Plug set-up 12)

PMO 1.5" *)

Service kit, NBR	9611926853
Service kit, EPDM	9611926854
Service kit, HNBR	9611926855
Service kit, FPM	9611926856

PMO 2" *)

Service kit, NBR	9611926830
Service kit, EPDM	9611926827
Service kit, HNBR	9611926836
Service kit, FPM	9611926833

PMO 2.5"+3" *)

Service kit, NBR	9611926831
Service kit, EPDM	9611926828
Service kit, HNBR	9611926837
Service kit, FPM	9611926834

PMO 4" *)

Service kit, NBR	9611926832
Service kit, EPDM	9611926829
Service kit, HNBR	9611926838
Service kit, FPM	9611926835

PMO 6"

Service kit, NBR	9611926857
Service kit, EPDM	9611926858
Service kit, HNBR	9611926859
Service kit, FPM	9611926860

NOTE!
All FPM service kits are supplied with EPDM seal ring, pos. 74.

NOTE!
*) From January 1st 2019, this valve size is not manufactured anymore. Spare parts will still be available.

1.7

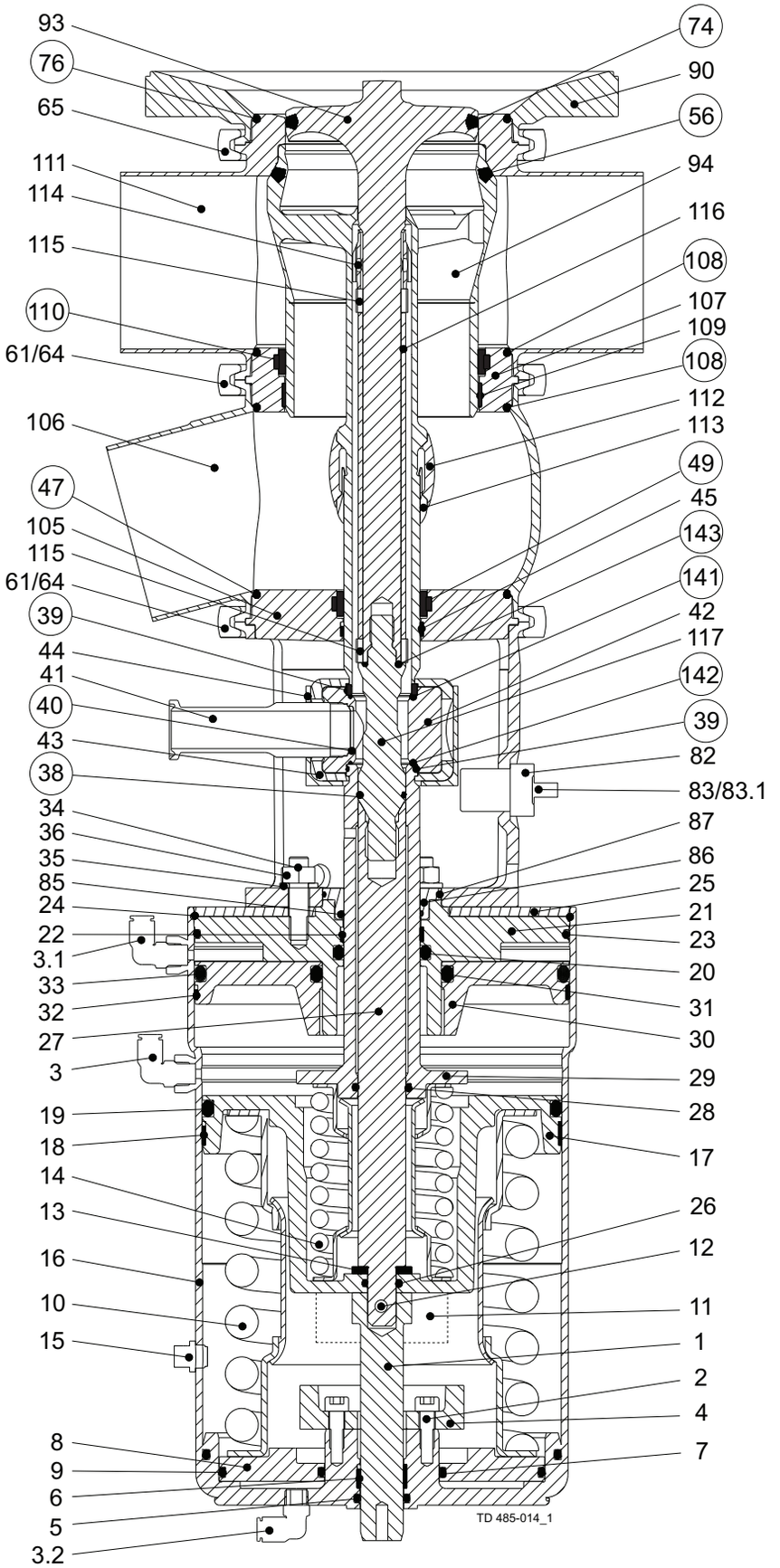

◯ = wear parts

Wear Parts

Pos	Qty	Denomination	2" 2½" 3" Seat ø81.3	4" Seat ø115.3
38	1	O-ring, EPDM	9611992671	9611992671
39	2	O-ring, EPDM	9611993493	9611993493
40	1	O-ring, EPDM	9611992671	9611992671
47	1	O-ring, EPDM (Standard)	9611993636	9611993640
	1	O-ring, NBR	9611993637	9611993641
	1	O-ring, HNBR	9611993639	9611993643
	1	O-ring, FPM	9611993638	9611993642
49	1	Lip seal, EPDM (Standard)	9613008511	9613008511
	1	Lip seal, NBR	9613008512	9613008512
	1	Lip seal, HNBR	9613008514	9613008514
	1	Lip seal, FPM	9613008513	9613008513
56	1	Seal ring, EPDM (Standard)	9613095109	9613095112
	1	Seal ring, NBR	9613095115	9613095116
	1	Seal ring, HNBR	9613095107	9613095110
	1	Seal ring, FPM	9613095108	9613095111
74	1	Seal ring, EPDM (Standard)	9613095209	9613095212
	1	Seal ring, NBR	9613095215	9613095216
	1	Seal ring, HNBR	9613095207	9613095210
	1	Seal ring, FPM - Alfa Laval recommends EPDM	9613095208	9613095211
76	1	O-ring, EPDM (Standard)	9611993636	9611993640
	1	O-ring, NBR	9611993637	9611993641
	1	O-ring, HNBR	9611993639	9611993643
	1	O-ring, FPM	9611993638	9611993642
91	1	O-ring, EPDM (Standard)	9611994610	9611993640
	1	O-ring, NBR	9611994611	9611993641
	1	O-ring, HNBR	9611994613	9611993643
	1	O-ring, FPM	9611994612	9611993642
108	2	O-ring, EPDM (Standard)	9611993636	9611993640
	2	O-ring, NBR	9611993637	9611993641
	2	O-ring, HNBR	9611993639	9611993643
	2	O-ring, FPM	9611993638	9611993642
110	1	Lip seal, EPDM (Standard)	9613008526	9613008531
	1	Lip seal, NBR	9613008527	9613008532
	1	Lip seal, HNBR	9613008529	9613008534
	1	Lip seal, FPM	9613008528	9613008533
141	1	O-ring, EPDM	9611993493	9611993493
142	1	O-ring, EPDM	9611993493	9611993493
143	1	O-ring, EPDM	9611995345	9611995345

NOTE!
All FPM service kits are supplied with EPDM seal ring, pos. 74.

1.7

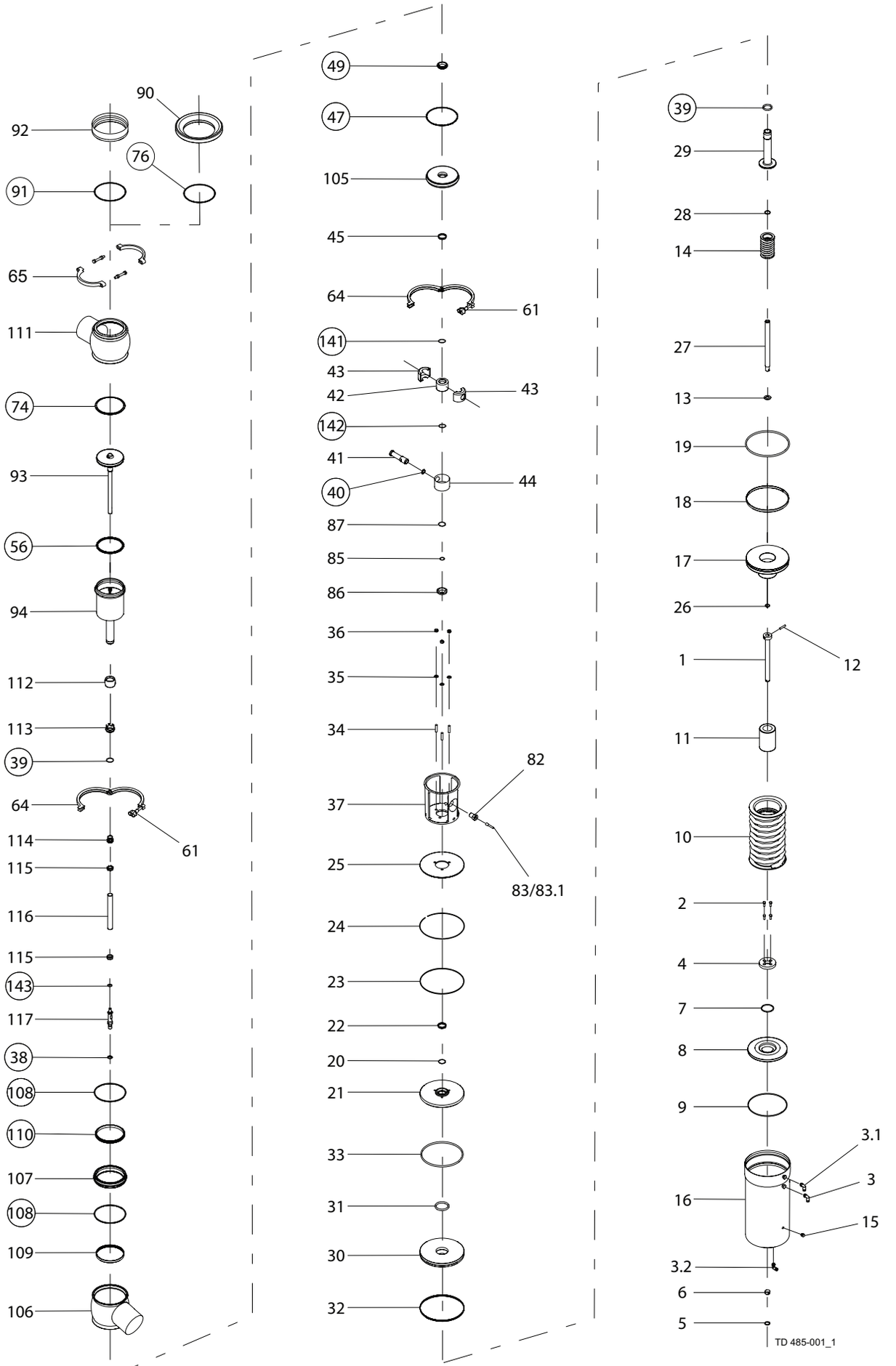

= wear parts

Parts

Pos		Qty	Denomination	2" Seat ø81.3	2½" Seat ø81.3	3" Seat ø81.3	4" Seat ø115.3
			Cpl. Actuator	9613099529	9613099529	9613099529	9613489068
1		1	Upper stem	9613007406	9613007406	9613007406	9613007405
2		4	Screw	9611993342	9611993342	9611993342	9611990144
3		1	Kit, air fitting and label, (blue, ThinkTop)	9611926026	9611926026	9611926026	9611926026
		1	Kit, air fitting and label, (white, Thinktop V-Series)	8010000754	8010000754	8010000754	8010000754
3.1		1	Kit, air fitting and label, (red, ThinkTop)	9611926028	9611926028	9611926028	9611926028
		1	Kit, air fitting and label, (blue, Thinktop V-Series)	9611926026	9611926026	9611926026	9611926026
3.2		1	Kit, air fitting and label, (yellow)	9611926027	9611926027	9611926027	9611926027
4		1	Stop for upper piston	9613005301	9613005301	9613005301	9613488301
5	•	1	O-ring, NBR	9611993499	9611993499	9611993499	9611993499
6	•	1	Guide ring, Turcite	9613008408	9613008408	9613008408	9613008408
7	•	1	O-ring, NBR	9611995099	9611995099	9611995099	9611995099
8		1	Upper piston	9614032101	9614032101	9614032101	9614032102
9	•	1	O-ring, NBR	9611995097	9611995097	9611995097	9611995097
10		1	Spring assembly	9613007502	9613007502	9613007502	9613025607
11		1	Distance spacer				9613010207
12		1	Pin	9611994198	9611994198	9611994198	9611994199
13		1	Washer	9611993595	9611993595	9611993595	9611993596
14		1	Spring assembly	9613009504	9613009504	9613009504	9613009504
15		1	Plug	9613414101	9613414101	9613414101	9613414101
16		1	Cylinder (3A marking)	9613005112	9613005112	9613005112	9613015028
17		1	Main piston	9614032201	9614032201	9614032201	9614032202
18	•	1	Guide ring, Turcite	9613008410	9613008410	9613008410	9613008411
19	•	1	O-ring, NBR	9611993507	9611993507	9611993507	9611993509
20	•	1	O-ring, NBR	9611993607	9611993607	9611993607	9611993607
21		1	Bottom	9613005401	9613005401	9613005401	9613016801
22	•	1	Guide ring, Turcite	9613008404	9613008404	9613008404	9613008404
23	•	1	O-ring, NBR	9611991489	9611991489	9611991489	22340675
24		1	Retaining ring	9613024803	9613024803	9613024803	9613024804
25		1	Cover disk	9613005803	9613005803	9613005803	9613005804
26		1	O-ring, NBR	9611993495	9611993495	9611993495	9611993530
27		1	Inner stem	9613007301	9613007301	9613007301	9613007305
28	•	1	O-ring	9611990030	9611990030	9611990030	9611990030
29		1	Piston rod	9613006006	9613006006	9613006006	9613006005
30		1	Lower piston	9613005501	9613005501	9613005501	9613016601
31	•	1	O-ring, NBR	42153	42153	42153	42153
32	•	1	Guide ring, Turcite	9613008406	9613008406	9613008406	9613008407
33	•	1	O-ring, NBR	9611993508	9611993508	9611993508	9611993510
34		3	Bolt	9611995392	9611995392	9611995392	9611995392
35		2	Washer	9611993594	9611993594	9611993594	9611993594
35.1		1	Washer	9611992559	9611992559	9611992559	9611992559
36		3	Nut	9611990360	9611990360	9611990360	9611990360
41		1	Flushing tube	9614030801	9614030801	9614030801	9614030802
42		1	Spindle liner	9614030701	9614030701	9614030701	9614030701
43		2	Clamp	9614030601	9614030601	9614030601	9614030601
44		1	Lock	9614030501	9614030501	9614030501	9614030502

Actuator diameter	Ø157	Ø186
Actuator type	4-TO Basic	6-TO Basic
Connection size*	2" + 2.5" + 3"	4"
• Actuator service kit, part no.	9611928349	9611928350

Parts

1.7

Pos	Qty	Denomination	2" Seat ø81.3	2½" Seat ø81.3	3" Seat ø81.3	4" Seat ø115.3
45	1	Guide ring, PTFE	9613008417	9613008417	9613008417	9613008417
61	2	Wingnut	9612558001	9612558001	9612558001	9612558001
64	2	Clamp without nut	9613021601	9613021601	9613021601	9614076601
65	1	Clamp with screws	9613017902	9613017902	9613017902	9613018002
82 Δ	1	Bolt for indication	9613092604	9613092604	9613092604	9613092604
83 Δ	1	Sensor for indication	9611995770	9611995770	9611995770	9611995770
83.1	1	Cable for sensor for indication	9611994915	9611994915	9611994915	9611994915
85	1	O-ring	9611990092	9611990092	9611990092	9611990092
86	1	Plug for actuator	9613099002	9613099002	9613099002	9613099002
87	1	O-ring	9611994599	9611994599	9611994599	9611994599
90	1	Tank flange	9613099201	9613099201	9613099201	9613099301
92	1	Pipe flange	9614050401	9614050401	9614050401	9614050501
93	1	Tank plug	9614007601	9614007901	9614006601	9614008201
94	1	Balance plug	9614010401	9614010701	9614009301	9614011001
105	1	Upper sealing element	9613006403	9613006403	9613006403	9613018803
107	1	Sealing element	9614001301	9614001301	9614001301	9614001401
109	1	Guide ring, PTFE	9613466108	9613466108	9613466108	9613466109
112	1	Rotating nozzle	9614010101	9614010101	9614010101	9614010101
113	1	Lockring rotating nozzle	9614010201	9614010201	9614010201	9614010201
114	1	Rotating nozzle	9614007101	9614007101	9614007101	9614007101
115	2	Guidering rotating nozzle	9614007201	9614007201	9614007201	9614007201
116	1	Pipe	9614007301	9614007302	9614007303	9614007304
117	1	Spindle	9614007401	9614007401	9614007401	9614007401

Note!

Δ Sensor service kit for valves delivered prior to October 2015 - 9611928352

900-579/7

Parts

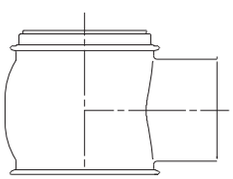

Type 20

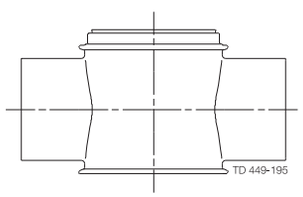

Type 30

Pos	Qty	Denomination	2" Seat ø81.3	2½" Seat ø81.3	3" Seat ø81.3	4" Seat ø115.3
37	1	Intermediate piece	9613019124	9613019124	9613019124	9613019218
111	1	Valve body, type 20	9614050217	9614050219	9614050221	9614050223
	1	Valve body, type 30	9614050218	9614050220	9614050222	9614050224
106	1	Vent body	9614001601	9614001901	9614002201	9614002501

Service kits for Product Wetted Parts

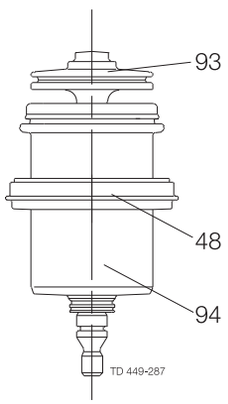

		Pipe flange	Tank flange
2" + 2.5" + 3"			
	Service kit, EPDM	9611926901	9611926967
	Service kit, NBR	9611926902	9611926968
	Service kit, HNBR	9611926903	9611926969
	Service kit, FPM	9611926904	9611926970
4”			
	Service kit, EPDM	9611926905	9611926971
	Service kit, NBR	9611926906	9611926972
	Service kit, HNBR	9611926907	9611926973
	Service kit, FPM	9611926908	9611926974

NOTE!
All FPM service kits are supplied with EPDM seal ring, pos. 74.

1.7

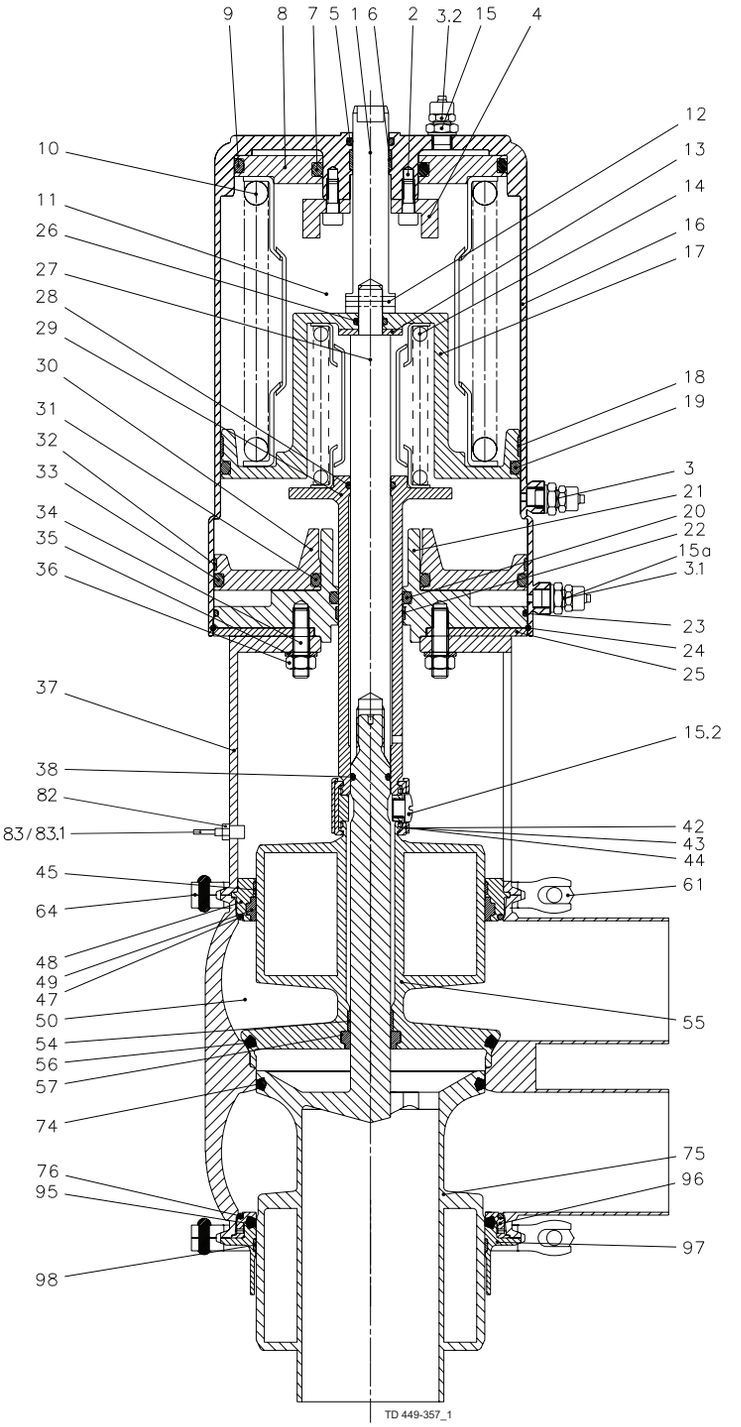
9
8
7
5
1
6
2
3.2
15
4
12
13
14
16
17
10
11
26
27
28
29
30
31
32
33
34
35
36
18
19
3
21
20
22
15a
3.1
23
24
25
37
15.2
38
82
83/83.1
42
43
44
45
64
61
48
49
47
50
54
56
57
74
55
75
96
76
95
97
98
TD 449-357_1

Wear Parts

Pos	Qty	Denomination	PMO 1½" Seat ø53.3*)	PMO 2" Seat ø81.3*)	PMO 2½" PMO 3" Seat ø115.3*)	PMO 4" Seat ø143.9*)	PMO 6" Seat ø206.1
38	1	O-ring, EPDM	9611993555	9611993555	9611993572	9611993572	9611993572
47	1	O-ring, EPDM (standard)	9611993628	9611993636	9611993640	9611993644	9611995003
	1	O-ring, NBR	9611993629	9611993637	9611993641	9611993645	9611995004
	1	O-ring, HNBR	9611993631	9611993639	9611993643	9611993647	9611995006
	1	O-ring, FPM	9611993630	9611993638	9611993642	9611993646	9611995005
49	1	Lip seal, EPDM (standard)	9613008521	9613008526	9613008531	9613008536	9613008560
	1	Lip seal, NBR	9613008522	9613008527	9613008532	9613008537	9613008561
	1	Lip seal, HNBR	9613008524	9613008529	9613008534	9613008539	9613008563
	1	Lip seal, FPM	9613008523	9613008528	9613008533	9613008538	9613008562
56	1	Seal ring, EPDM (Standard)	9613095106	9613095109	9613095112	9613095123	9613095151
	1	Seal ring, NBR	9613095114	9613095115	9613095116	9613095124	9613095152
	1	Seal ring, HNBR	9613095104	9613095107	9613095110	9613095121	9613095149
	1	Seal ring, FPM	9613095105	9613095108	9613095111	9613095122	9613095150
57	1	Lip seal, EDPM (Standard)	9613008706	9613008711	9613008711	9613008711	9613008711
	1	Lip seal, NBR	9613008707	9613008712	9613008712	9613008712	9613008712
	1	Lip seal, HNBR	9613008709	9613008714	9613008714	9613008714	9613008714
	1	Lip seal, FPM	9613008708	9613008713	9613008713	9613008713	9613008713
74	1	Seal ring, EPDM (Standard)	9613095206	9613095209	9613095212	9613095223	9613095247
	1	Seal ring, NBR	9613095214	9613095215	9613095216	9613095224	9613095248
	1	Seal ring, HNBR	9613095204	9613095207	9613095210	9613095221	9613095245
	1	Seal ring, FPM - Alfa Laval recommends EPDM	9613095205	9613095208	9613095211	9613095222	9613095246
76	1	O-ring, EPDM (Standard)	9611993628	9611993636	9611993640	9611993644	9611995003
	1	O-ring, NBR	9611993629	9611993637	9611993641	9611993645	9611995004
	1	O-ring, HNBR	9611993631	9611993639	9611993643	9611993647	9611995006
	1	O-ring, FPM	9611993630	9611993638	9611993642	9611993646	9611995005
95	1	Special lip seal, EDPM (Standard)	9613464243	9613464203	9613464207	9613464211	9613464247
	1	Special lip seal, NBR	9613464244	9613464204	9613464208	9613464212	9613464248
	1	Special lip seal, HNBR	9613464241	9613464201	9613464205	9613464209	9613464245
	1	Special lip seal, FPM	9613464242	9613464202	9613464206	9613464210	9613464246

NOTE!
All FPM service kits are supplied with EPDM seal ring, pos. 74.

NOTE!
*) From January 1st 2019, this valve size is not manufactured anymore. Spare parts will still be available.

Parts

1.7

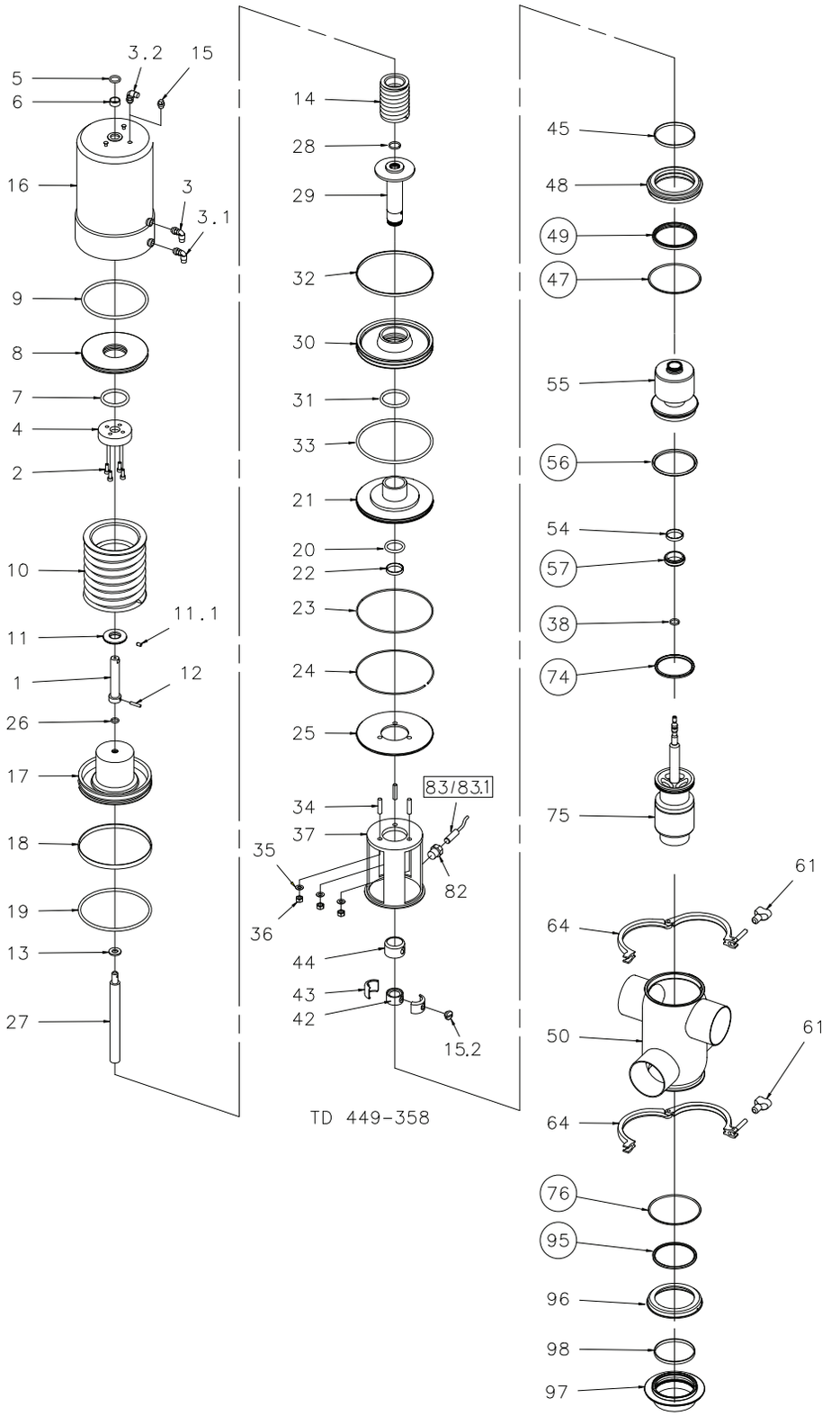

◯ = Wear part

Parts

Pos		Qty	Denomination	PMO 1½" Seat ø53.3*)	PMO 2" Seat ø81.3*)	PMO 2½" Seat ø115.3*)	PMO 3" Seat ø115.3*)	PMO 4" Seat ø143.9*)	PMO 6" Seat ø206.1
			Cpl. Actuator	9613055476	9613055444	9613055564	9613055564	9613083745	9613489008
1		1	Upper stem	9613010102	9613010102	9613007401	9613007401	9613007402	9613007404
2		4	Screw			9611993342	9611993342	9611993342	9611990144
3		1	Kit, air fitting and label, (blue, ThinkTop)	9611926026	9611926026	9611926026	9611926026	9611926026	9611926026
		1	Kit, air fitting and label, (white, ThinkTop V-Series)	8010000754	8010000754	8010000754	8010000754	8010000754	8010000754
3.1		1	Kit, air fitting and label, (red, ThinkTop)	9611926028	9611926028	9611926028	9611926028	9611926028	9611926028
		1	Kit, air fitting and label, (blue, ThinkTop V-Series)	9611926026	9611926026	9611926026	9611926026	9611926026	9611926026
3.2		1	Kit, air fitting and label, (yellow)	9611926027	9611926027	9611926027	9611926027	9611926027	9611926027
4		1	Stop for upper piston			9613005301	9613005301	9613005302	9613488301
5	•	1	O-ring, NBR	9611993499	9611993499	9611993499	9611993499	9611993499	9611993499
6	•	1	Guide ring, Turcite	9613008408	9613008408	9613008408	9613008408	9613008408	9613008408
7	•	1	O-ring, NBR			9611993514	9611993514	9611993514	9611993514
8		1	Upper piston			9613005601	9613005601	9613005602	9613005602
9	•	1	O-ring, NBR			9611993512	9611993512	9611993513	9611993513
10		1	Spring assembly	9613012501	9613012501	9613007501	9613007501	9613025603	9613025605
11		1	Distance spacer	9613010202	9613010202				9613010207
11.1		1	Screw	9611991763	9611991763				
12		1	Pin	9611994197	9611994197	9611994198	9611994198	9611994199	9611994199
13		1	Washer	9611993594	9611993594	9611993595	9611993595	9611993596	9611993596
14		1	Spring assembly	9613013101	9613013102	9613009502	9613009502	9613009502	9613009503
15		1	Plug	9613414101	9613414101	9613414101	9613414101	9613414101	9613414101
16		1	Cylinder (3A marking)	9613012606	9613012606	9613005106	9613005106	9613015011	9613015021
17		1	Main piston	9613013201	9613013201	9613005701	9613005701	9613015901	9613015901
18	•	1	Guide ring, Turcite	9613008409	9613008409	9613008410	9613008410	9613008411	9613008411
19	•	1	O-ring, NBR	9611993505	9611993505	9611993507	9611993507	9611993509	9611993509
20	•	1	O-ring, NBR	9611993503	9611993503	9611993607	9611993607	9611993607	9611993607
21		1	Bottom	9613014001	9613014001	9613005401	9613005401	9613016801	9613016801
22	•	1	Guide ring, Turcite	9613008403	9613008403	9613008404	9613008404	9613008404	9613008404
23	•	1	O-ring, NBR	9611992228	9611992228	9611991489	9611991489	22340675	22340675
24		1	Retaining ring	9613024802	9613024802	9613024803	9613024803	9613024804	9613024804
25		1	Cover disk	9613005802	9613005802	9613005803	9613005803	9613005804	9613005804
26		1	O-ring, NBR	9611993528	9611993528	9611993495	9611993495	9611993530	9611993530
27		1	Inner stem	9613010602	9613010603	9613007303	9613007303	9613007302	9613007305
28	•	1	O-ring	9611993495	9611993495	9611990030	9611990030	9611990030	9611990030
29		1	Piston rod	9613013401	9613013402	9613006002	9613006002	9613006002	9613006004
30		1	Lower piston	9613013801	9613013801	9613005501	9613005501	9613016601	9613016601
31	•	1	O-ring, NBR	42153	42153	42153	42153	42153	42153
32	•	1	Guide ring, Turcite	9613008405	9613008405	9613008406	9613008406	9613008407	9613008407
33	•	1	O-ring, NBR	22341275	22341275	9611993508	9611993508	9611993510	9611993510
34		3	Bolt	9611993618	9611993618	9611993618	9611993618	9611993618	9611993618
35		3	Washer	9611993594	9611993594	9611993594	9611993594	9611993594	9611993594
36		3	Nut	9611990360	9611990360	9611990360	9611990360	9611990360	9611990360
42		1	Spindle liner	9613011601	9613033501	9613009001	9613009001	9613009001	9613009001
43		2	Clamp	9613011801	9613033601	9613009201	9613009201	9613009201	9613009201
44		1	Lock	9613011701	9613009102	9613009101	9613009101	9613009101	9613009101

Actuator diameter	Ø120	Ø157	Ø186
Actuator type	3	4BS	4SS, 5BS, 5SS
Connection size*	DN/OD 1½"-2"*	DN/OD 2½"-3"*	DN/OD 4"-6"*
• Actuator service kit, part no.	9611926414	9611926415	9611926416

Pos		Qty	Denomination						
45		1	Guide ring, PTFE	9613008413	9613008414	9613008415	9613008415	9613008421	9613008421
48		1	Upper sealing element	9613490401	9613006404	9613018804	9613018804	9613071301	9613488001
54		1	Guide ring, PTFE	9613008401	9613008402	9613008402	9613008402	9613008402	9613008402
55		1	Upper plug	9613491601	9613070101	9613070201	9613070203	9613070401	9613488901
61		2	Wingnut	9612558001	9612558001	9612558001	9612558001	9612558001	9613149501
64		2	Clamp without nut	9613021501	9613021601	9613021701	9613021701	9613021801	9613488401
75		1	Lower plug	9613491001	9613465801	9613465802	9613465803	9613465804	9613487101
82	Δ	1	Bolt for indication	9613490102	9613092604	9613092604	9613092604	9613092604	9613092604
83	Δ	1	Sensor for indication	9611995770	9611995770	9611995770	9611995770	9611995770	9611995770
83.1		1	Cable for sensor for indication	9611994915	9611994915	9611994915	9611994915	9611994915	9611994915
96		1	Lower sealing element, upper part	9613490201	9613465201	9613465401	9613465401	9613465601	9613488101
97		1	Lower sealing element, lower part	9613490301	9613465301	9613465501	9613465501	9613465701	9613488201
98		1	Guide ring, Turcite	9613466107	9613466101	9613466102	9613466102	9613466103	9613466106

NOTE!

Δ Sensor service kit for 1½" valves delivered prior to October 2015 - 9611928353

Δ Sensor service kit for 2" - 6" valves delivered prior to October 2015 - 9611928352

NOTE!
*) From January st 2019, this valve size is not manufactured anymore. Spare parts will still be available.

900-548/8

1.7

Parts

Pos	Qty	Denomination	PMO 1½" Seat ø53.3*)	PMO 2" Seat ø81.3*)	PMO 2½" Seat ø115.3*)	PMO 3" Seat ø115.3*)	PMO 4" Seat ø143.9*)	PMO 6" Seat ø206.1
37	1	Intermediate piece	9613015609	9613019121	9613019215	9613019213	9613019317	9613496601
50	1	Valve body, 11-00	9613489201	9613070901	9613071001	9613071101	9613071201	9613484801
	1	Valve body, 12-00	9613489205	9613070905	9613071005	9613071105	9613071205	9613484805
	1	Valve body, 21-00	9613489207	9613070907	9613071007	9613071107	9613071207	9613484807
	1	Valve body, 22-00	9613489209	9613070909	9613071009	9613071109	9613071209	9613484809
	1	Valve body, 11-90	9613489202	9613070902	9613071002	9613071102	9613071202	9613484802
	1	Valve body, 12-90	9613489206	9613070906	9613071006	9613071106	9613071206	9613484806
	1	Valve body, 21-90	9613489208	9613070908	9613071008	9613071108	9613071208	9613484808
	1	Valve body, 22-90	9613489210	9613070910	9613071010	9613071110	9613071210	9613484810
	1	Valve body, 11-180	9613489203	9613070903	9613071003	9613071103	9613071203	9613484803
	1	Valve body, 11-270	9613489204	9613070904	9613071004	9613071104	9613071204	9613484804

NOTE!
*) From January st 2019, this valve size is not manufactured anymore. Spare parts will still be available.

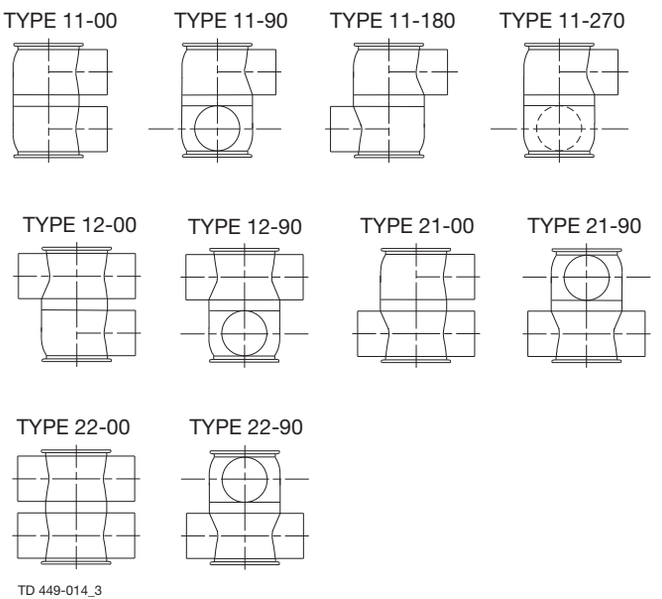

TD 449-014_3

Service kits for Product Wetted Parts

Plug set-up

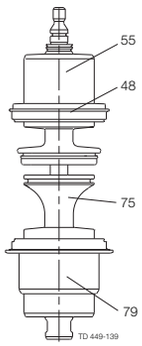

(Plug set-up 12)

PMO 1½" *)

Service kit, NBR	9611926853
Service kit, EPDM	9611926854
Service kit, HNBR	9611926855
Service kit, FPM	9611926856

PMO 2" *)

Service kit, NBR	9611926830
Service kit, EPDM	9611926827
Service kit, HNBR	9611926836
Service kit, FPM	9611926833

PMO 2.5"+3" *)

Service kit, NBR	9611926831
Service kit, EPDM	9611926828
Service kit, HNBR	9611926837
Service kit, FPM	9611926834

PMO 4" *)

Service kit, NBR	9611926832
Service kit, EPDM	9611926829
Service kit, HNBR	9611926838
Service kit, FPM	9611926835

PMO 6"

Service kit, NBR	9611926857
Service kit, EPDM	9611926858
Service kit, HNBR	9611926859
Service kit, FPM	9611926860

NOTE!
All FPM service kits are supplied with EPDM seal ring, pos. 74.

NOTE!
*) From January st 2019, this valve size is not manufactured anymore. Spare parts will still be available.

Rebuilding Set PMO-F to PMO Plus CP

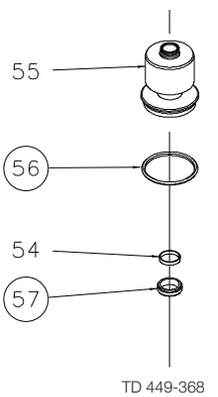

Rebuilding Set PMO-F to PMO Plus CP

Pos	Qty	Denomination	PMO 1½" Seat ø53,3*)	PMO 2" Seat ø81.3*)	PMO 2½" Seat ø115.3*)	PMO 3" Seat ø115.3*)	PMO 4" Seat ø143.9*)	PMO 6" Seat ø206.1
		Upper plug, cpl., NBR	9613466265	9613466201	9613466202	9613466203	9613466204	9613466266
		Upper plug, cpl., EPDM	9613466267	9613466205	9613466206	9613466207	9613466208	9613466268
		Upper plug, cpl., HNBR	9613466269	9613466209	9613466210	9613466211	9613466212	9613466270
		Upper plug, cpl., FPM	9613466271	9613466213	9613466214	9613466215	9613466216	9613466272

Pos	Qty	Denomination
54	1	Guide ring, PTFE
55	1	Upper plug
56	1	Seal ring
57	1	Lip seal
99	1	Label

NOTE!

*) From January st 2019, this valve size is not manufactured anymore. Spare parts will still be available.

1.7

Axial installation tool

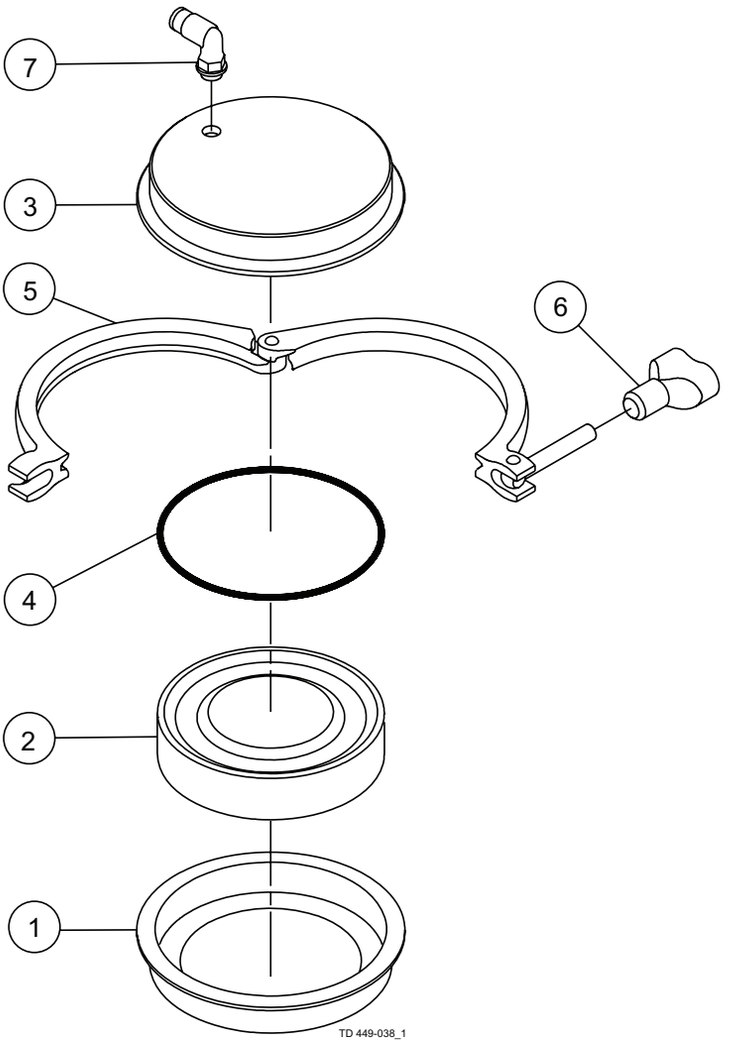

Radial installation tool

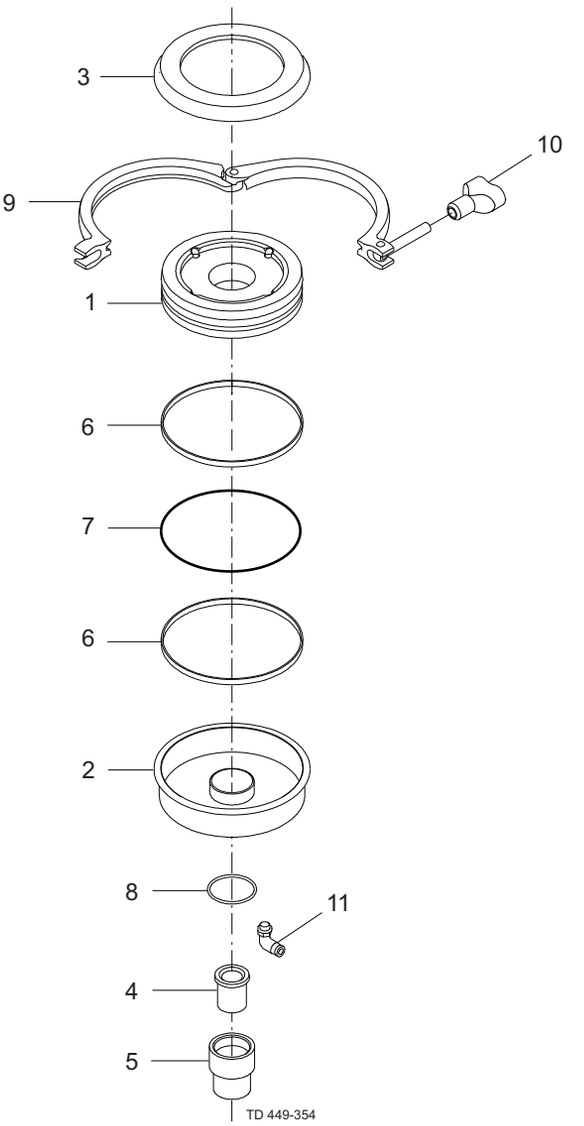

Seat size					
Unique Mixproof, Unique Mixproof CP3 and Unique Mixproof 3-body	**Seat 53.3 1.5" + 2”**	**Seat 81.3 2.5” + 3”**	**Seat 100.3 4”**	**Seat 115.3 6”**	
Axial installation tool	9613050501	9613050502	9613050508	***9613050503	
Radial installation tool	9613426001	9613426002	9613426003	***9613426004	
Mounting tool for lip seal	8010017878				
Unique-TO	**Seat 53.3**	**Seat 81.3**	**Seat 100.3**	**Seat 115.3**	
Axial installation tool	9613050501	9613050502	9613050508	9613050503	
Radial installation tool	9613426001	9613426002	9613426003	9613426004	
Mounting tool for lip seal**	9613004001				
Mounting tool for lip seal*	8010006489	8010001579	8010001584	8010001591	
Unique LP and LP-F, PMO Curd and Curd CP Mixproof				**Seat 143.9**	**Seat 206.1**
Axial installation tool				9613050507	9613050510
Radial installation tool				9613426009	9613426010
Unique PMO, PMO-F, PMO Plus and PMO Plus CP	**Seat 53.3 1.5"**	**Seat 81.3 2”**	**Seat 115.3 2.5” + 3”**	**Seat 143.9 4”**	**Seat 206.1 6”**
Axial installation tool	9613050501	9613050502	9613050503	9613050507	9613050510
Radial installation tool	9613426001	9613426002	9613426004	9613426009	9613426010
Unique PMO Plus CP, HT		**Seat 81.3 2.5"**	**Seat 81.3 3"**	**Seat 115.3 4"**	**Seat 206.1 6"**
Axial installation tool		9613050502	9614079201	9613050503	9613050510
Radial installation tool		9614078801	9614078801	9614078802	9614078803
Unique PMO Plus CP, VT		**Seat 81.3 2"+2.5"**	**Seat 81.3 3"**	**Seat 115.3 4"**	
Axial installation tool		9613050502	9614079201	9613050503	
Radial installation tool		9614078801	9614078801	9614078802	

Note!
*) = Period 1702-->
**) = Period <-- 1702
***) Not applicable for Unique Mixproof CP3 and Unique Mixproof 3-body.

1.7

Axial installation tool

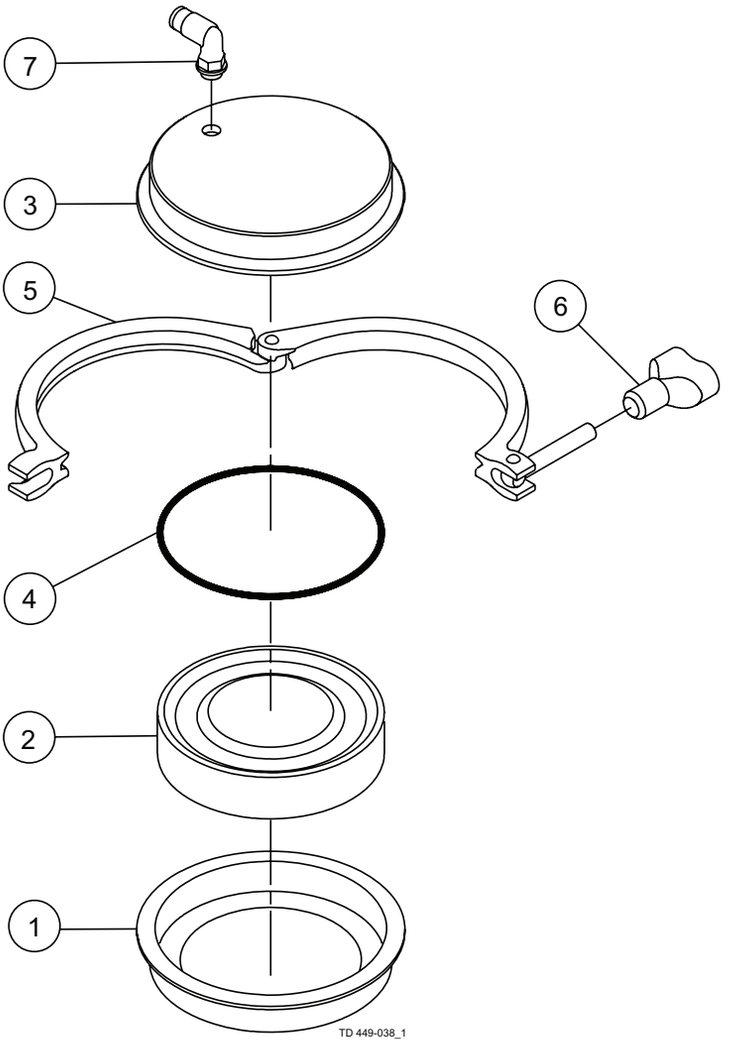

Radial installation tool

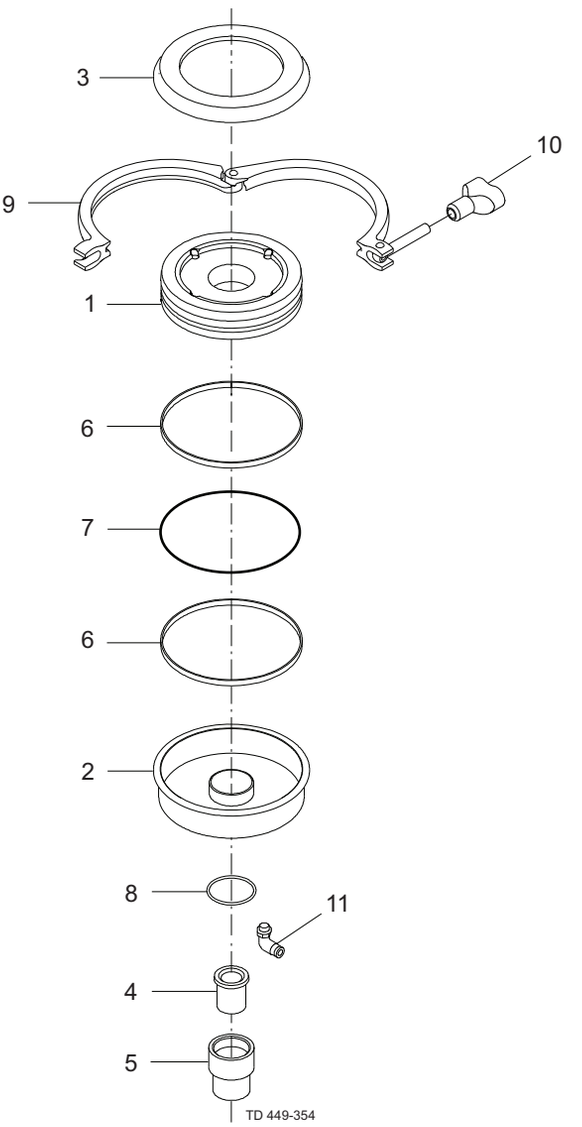

Pos	Qty	Denomination	9613050501*	9613050502*	9614079201*	9613050508*
Spare parts for axial installation tool						
1	1	Lower part				
2	1	Piston				
3	1	Upper part				
4	1	O-ring, NBR	9611993703	9611993703	9611993703	9611993349
5	1	Clamp				
6	1	Wing nut				
7	1	Air fitting				

Pos	Qty	Denomination	9613050503*	9613050507*	9613050510*
Spare parts for axial installation tool					
1	1	Lower part			
2	1	Piston			
3	1	Upper part			
4	1	O-ring, NBR	9611993349	9611994113	9611995169
5	1	Clamp			
6	1	Wing nut			
7	1	Air fitting			

Pos	Qty	Denomination	9613426001*	9613426002*	9613426003*	9613426004*	9613426009*
Spare parts for radial installation tool							
1	1	Piston					
2	1	Lower part					
3	1	Upper part					
4	1	Bushing					
5	1	Guide					
6	2	Guide ring	9613008422	9613008422	9613008422	9613008422	9613008423
7	1	O-ring, NBR	9611993349	9611993349	9611993349	9611993349	9611994113
8	1	O-ring, NBR	9611993705	9611993705	9611993705	9611993705	9611993705
9	1	Clamp					
10	1	Wing nut					
11	1	Air fitting					

Pos	Qty	Denomination	9613426010*	9614078801*	9614078802*	9614078803*
Spare parts for radial installation tool						
1	1	Piston				
2	1	Lower part				
3	1	Upper part				
4	1	Bushing				
5	1	Guide				
6	2	Guide ring	9613008430	9613008422	9613008422	9613008430
7	1	O-ring, NBR	9611995169	9611993349	9611993349	9611995169
8	1	O-ring, NBR	9611993705	9613993705	9613993705	9613993705
9	1	Clamp				
10	1	Wing nut				
11	1	Air fitting				

* = article number of the complete tool

Not manufactured anymore

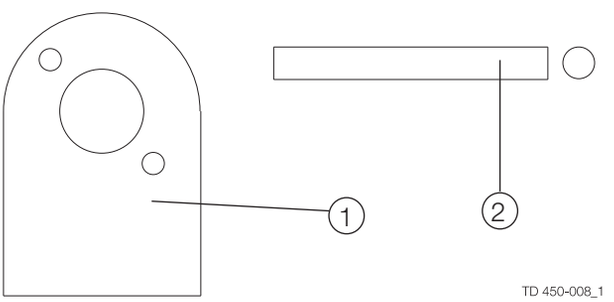

Pos	Qty	Denomination	51 mm	DN50	63.5 mm	DN65
1	1	Mounting plate	9612627601	9612627601	9612627601	9612627601
2	1	Rod				

Not manufactured anymore

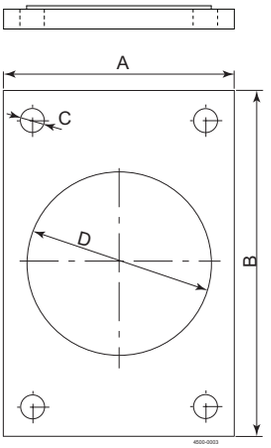

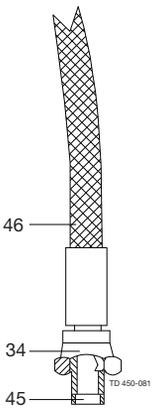

Pos		Qty	Denomination	51 mm	DN50	63.5 mm	DN65
1		1	Top plate				
2		1	Cylinder lid				
3		1	Nut				
4	■	2	O-ring				
5	■	5	O-ring				
6		4	Air fitting				
7		1	Piston rod				
8		1	Piston				
9	■	1	O-ring				
10	■	1	O-ring				
11	■	2	O-ring				
12		2	Lock ring				
13	■	2	O-ring				
14		1	Screw				
15		1	Steam connection pipe				
16	●	1	O-ring				
17	■	1	O-ring	9612618801	9612618801	9612618801	9612618801
18	●	1	Valve body seal	9612619001	9612619001	9612619001	9612619001
19		1	Stem				
20		1	Bellows, internal	9612619301	9612619301	9612619401	9612619401
21		1	Bellows, external	9612619701	9612619701	9612619801	9612619801
22		1	Guide	9612620101	9612620101	9612620101	9612620101
23		1	Valve body, 20				
		1	Valve body, 30				
		1	Valve body 20 Mix size (side ports 63,5mm/DN65)				
		1	Valve body 30 Mix size (side ports 63,5mm/DN65)				
24		1	Lower plug, external	9612621801	9612621801	9612621801	9612621801
25	●	1	Lower plug seal	9612622001	9612622001	9612622001	9612622001
26	●	1	Upper plug seal				
27	●	1	O-ring				
28		1	Lower plug, internal	9612622601	9612622601	9612622601	9612622601
29	●	1	O-ring				
30		1	Upper plug	9612622901	9612622901	9612623001	9612623001
31		1	Clamp				
32		1	Bonnet				
33	●	1	O-ring				
34	★■●	9	O-ring				
35		1	Condensate connection pipe	9612623901	9612623901	9612623901	9612623901
36		1	Screw				
37		4	Screw				
38		1	Lower piston				
39		1	Main piston				
40		1	Cylinder assembly				
41		3	Pin				
42		3	Screw				
43		1	Upper piston				
45	★	2	Welding connector				
46	★	2	Flexible hose				
48		1	Upper piston rod				
49		2	Screw				
50	■	1	O-ring				

Service kit for Actuator

■ Service kit A (includes 9 pcs. O-ring pos. 34) 9611993757

Service kit for product wetted parts

● Service kit B, EPDM (includes 4 pcs. O-ring pos. 34) 9611993758

Service kit for installation

★ Service kit C for installation (includes 4 pcs. O-ring pos. 34) .

Parts marked with ★■● are included in service kits.

1.8 Regulating valves

Regulating valves from Alfa Laval are the ideal choice whether you are looking for the perfect flow control or constant pressure.



Spare parts

Unique RV-ST Regulating Valve, shut-off 1.8.728
Unique RV-ST Regulating Valve, shut-off (US version) 1.8.742
Unique RV-ST maintainable actuator 1.8.746
Unique RV-ST Needle Valve and std. 1” Size (US version) 1.8.750
Unique RV-P 1.8.752
Unique RV-P aseptic 1.8.756
CPMI-2 and CPMO-2 constant-pressure modulating valve 1.8.762
CPMI-2 and CPMO-2 constant pressure valve, polished (US version) 1.8.764
CPM-Booster 3 for cover with thread 31356-0067-1/2 . . . . . 1.8.766
CPM-I-D60 Constant Pressure Valve 1.8.768
CPM-I-D60 Constant Pressure Valve, polished (US version) 1.8.770
771S change-over 21, 41 . . . . . 1.8.772
771S reverse acting 27-47 . . . . . 1.8.774
771S thottling valve, shut-off 1.8.776
871W aseptic valves, shut-off 1.8.778
SB CO2 house 1.8.780
SB Tank Pressure Regulator, 25-38 mm 1.8.782
SB Tank Pressure Regulator, 51-76.1 mm 1.8.784

Actuators for 700 series (US version)

771 Type 15/25 series actuators 1.8.786
Diaphragm actuator with Moore positioner 771S series 1½” to 3” valves . . 1.8.788
Diaphragm actuator with Moore positioner 771S series 1” valve 1.8.790
Positioner Assemblies for 14P Actuators 1.8.792
Positioner Assemblies for 24P Actuators 1.8.794

Spare parts for obsolete products

Unique 7710, Regulating Valve 1.8.796

1.8 Regulating valves

Regulating valves from Alfa Laval are the ideal choice whether you are looking for the perfect flow control or constant pressure.

Unique 7710, maintainable actuator 1.8.800
171-10M-90 Micrometer valve 1.8.802
CPM 8, 16, 33 . . . . . 1.8.804
CPM D-60 . . . . . 1.8.806
CPM-I and CPM-O, 7, 14, 25 Constant-Pressure Modulating Valve 1.8.808
CPM-Booster 1 for cover without tread 1.8.810
CPM-Booster 2 for cover with thread 1.8.812
Unique SPC-1 Regulating Valve 1.8.814
Unique SPC-1, maintainable actuator 1.8.820
SPC-1 Sanitary Proportional-Controlled Valve with positioner 1.8.822
SPC-2 Sanitary Electro-Pneumatic Modulating Valve (Samson actuator, beige colour) 1.8.826
SPC-2 Sanitary Electro-Pneumatic Modulating Valve with ARC plug 1.8.830
SPC-2 (Kämmer actuator, yellow colour) 1.8.834
SPC-P and SPC-L 1.8.836
SMO-R Regulating Valve 1.8.840
Fine-adjustment Regulating Valve, type FA 1.8.844
Regulating Valve, type B 1.8.846
ARC-P Aseptic Regulating Valve 1.8.848
ARC-P Aseptic Regulating Valve, actuator 1.8.850
171 & 171OY throttling valves 1.8.852
171 & 171OY divert valves 1.8.854
Type 15 actuator for 171 series 1.8.856
371-21 throttling valves, change-over 1.8.858
371-10, 30 & 27 throttling valves 1.8.860
Type 15 actuator for 371 valves 1.8.862
Type 14 N/O actuator “piston style actuators with positioner 1.8.864
Type 24 N/C piston style actuators with positioner 1.8.866
Diaphragm actuator w/Moore positioner 1.8.868

If the actuator is marked with a danger warning do NOT attempt to cut the actuator open.



Do NOT attempt to disassemble the actuator due to spring under load danger!

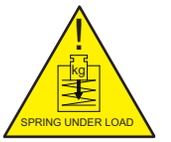

Do NOT attempt to cut the actuator open, due to spring under load danger!

1.8

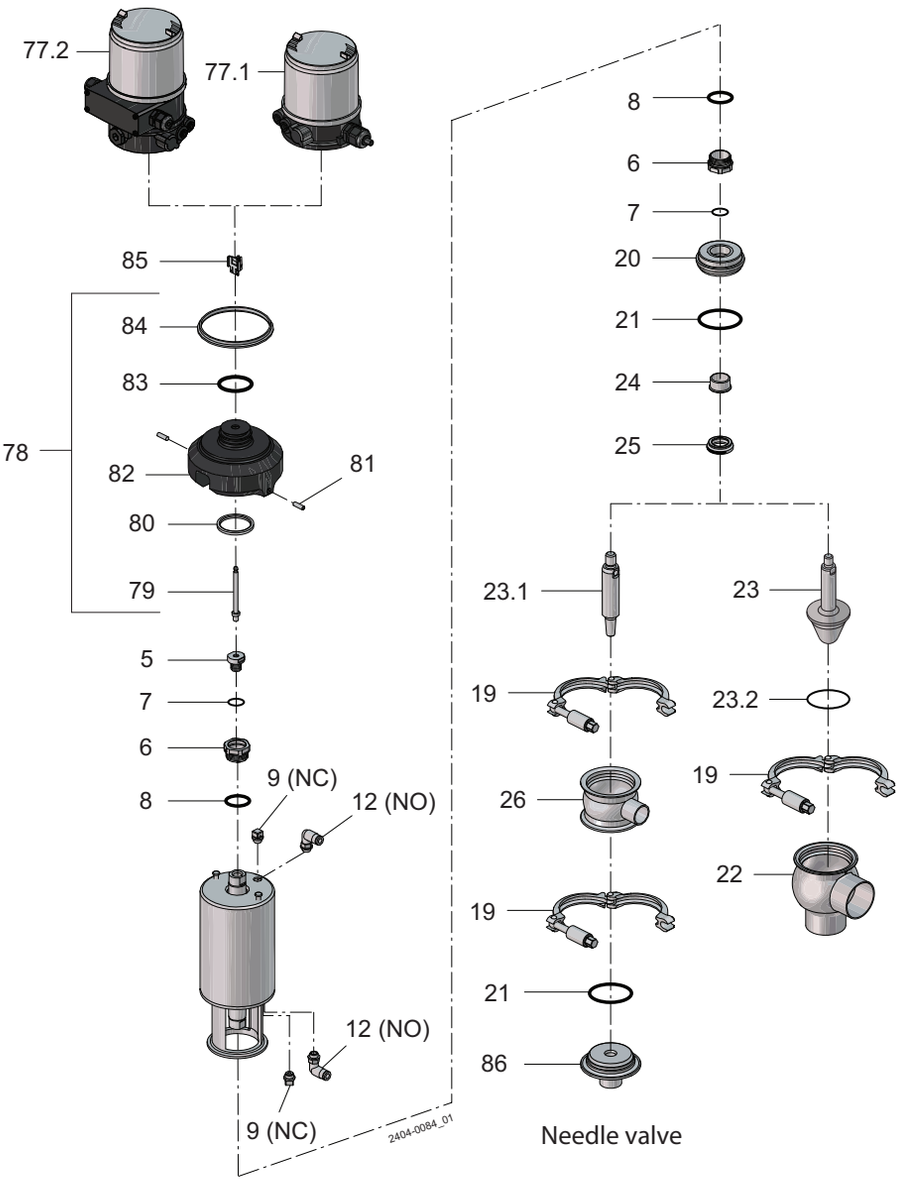

Pos		Qty	Denomination	25 mm DN25 Needle	25 mm DN25 Standard	DN40 38 mm	DN50 51 mm
Actuator							
			Actuator, complete (NO)	9613154801	9613154801	9613154801	9613154802
			Actuator, complete (NC)	9613154806	9613154806	9613154806	9613154807
			Actuator, complete (A/A)				
			Actuator, complete (NO) - US	9613154846	9613154846	9613154846	9613154847
			Actuator, complete (NC) - US	9613154851	9613154851	9613154851	9613154852
			Actuator, complete (A/A) - US				
6	□	2	Bushing				
7	□	2	O-ring				
8	□	2	O-ring				
9		1	Plug	9613414101	9613414101	9613414101	9613414101
12		1	Air fitting	9611991988	9611991988	9611991988	9611991988
		1	Air fitting - US	9611994682	9611994682	9611994682	9611994682
76		1	Positioner, 8694, (incl. pos. 77 to 85) - without display	9611995266	9611995266	9611995266	9611995266
		1	Positioner, 8692, (incl. pos. 77 to 85) - with display	9611995268	9611995268	9611995268	9611995268
		1	Positioner, 8694, (incl. pos. 77 to 85) - US - without display	9634085943	9634085943	9634085943	9634085943
		1	Positioner, 8692, (incl. pos. 77 to 85) - US - with display	9634085944	9634085944	9634085944	9634085944
77.1		1	Positioner, 8694, without display				
		1	Positioner, 8692, with display				
77.2		1	Positioner - US, 8694, without display				
		1	Positioner - US, 8692 with display				
78		1	Adapter, cpl. (incl. pos. 79 to 84)	9611995337	9611995337	9611995337	9611995337
79		1	Spindle				
80		1	Special X-ring	9612569601	9612569601	9612569601	9612569601
81		2	Allen screw	9611993409	9611993409	9611993409	9611993409
82		1	Adapter				
83		1	O-ring	9611995273	9611995273	9611995273	9611995273
84		1	Gasket for adapter	9611995274	9611995274	9611995274	9611995274
85		1	Puck sensorpad, cpl.	9611995275	9611995275	9611995275	9611995275
Clamp							
19		2	Clamp	9612939303			
		1	Clamp		9612939303	9612939303	9612939304
Bonnet							
20		1	Bonnet	9613127102	9613127102	9613127102	9613127103
21	◆	2	O-ring, EPDM (standard)				
	◆	2	O-ring, HNBR				
	◆	2	O-ring, FPM				
	◆	1	O-ring, EPDM (standard)				
	◆	1	O-ring, HNBR				
	◆	1	O-ring, FPM				
			O-ring, set (10 pcs.), EPDM	9614059422	9614059422	9614059422	9614059425
			O-ring, set (10 pcs.), HNBR	9614059423	9614059423	9614059423	9614059426
			O-ring, set (10 pcs.), FPM	9614059424	9614059424	9614059424	9614059427
24		1	Bushing	9613125002	9613125002	9613125002	9613125002
25	◆	1	Lip seal, EPDM (standard)				
	◆	1	Lip seal, HNBR				
	◆	1	Lip seal, FPM				
			Lip seal, set (10 pcs.) EPDM	9614059419	9614059419	9614059419	9614059419
			Lip seal, set (10 pcs.) HNBR	9614059420	9614059420	9614059420	9614059420
			Lip seal, set (10 pcs.) FPM	9614059421	9614059421	9614059421	9614059421
Valve body							
22		1	Valve body, lower, 2 ports ISO		9613139501	9613139503	9613139505
		1	Valve body, lower, 3 ports ISO		9613139502	9613139504	9613139506
		1	Valve body, lower, 2 ports DIN		9613139601	9613139603	9613139605
		1	Valve body, lower, 3 ports DIN		9613139602	9613139604	9613139606
		1	Valve body, lower, 2 ports, clamp - US		9613161617	9613161631	9613161645
		1	Valve body, lower, 3 ports, clamp - US		9613161626	9613161640	9613161654
26		1	Valve body, upper, 1 port ISO, welding ends	9613139301			
		1	Valve body, upper, 2 ports ISO, welding ends	9613139302			
		1	Valve body, upper, 1 port DIN, welding ends	9613139401			
		1	Valve body, upper, 2 ports DIN, welding ends	9613139402			
		1	Valve body, upper, 1 port, clamp ends - US	9613161513			
		1	Valve body, upper, 2 ports, clamp ends - US	9613161516			
86		1	Valve body base, welding end, ISO	8010009122			
		1	Valve body base, welding end, DN	8010009123			
		1	Valve body base, clamp - ISO	8010013384			
		1	Valve body base, clamp - DIN	8010013405			
		1	Valve body base, male part SMS	8010013698			
		1	Valve body base, male part DIN	8010013894			
		1	Valve body base, clamp - US	9634087702			

If the actuator is marked with a danger warning do NOT attempt to cut the actuator open.



Do NOT attempt to disassemble the actuator due to spring under load danger!

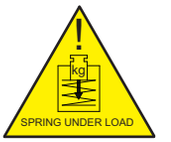

Do NOT attempt to cut the actuator open, due to spring under load danger!

1.8

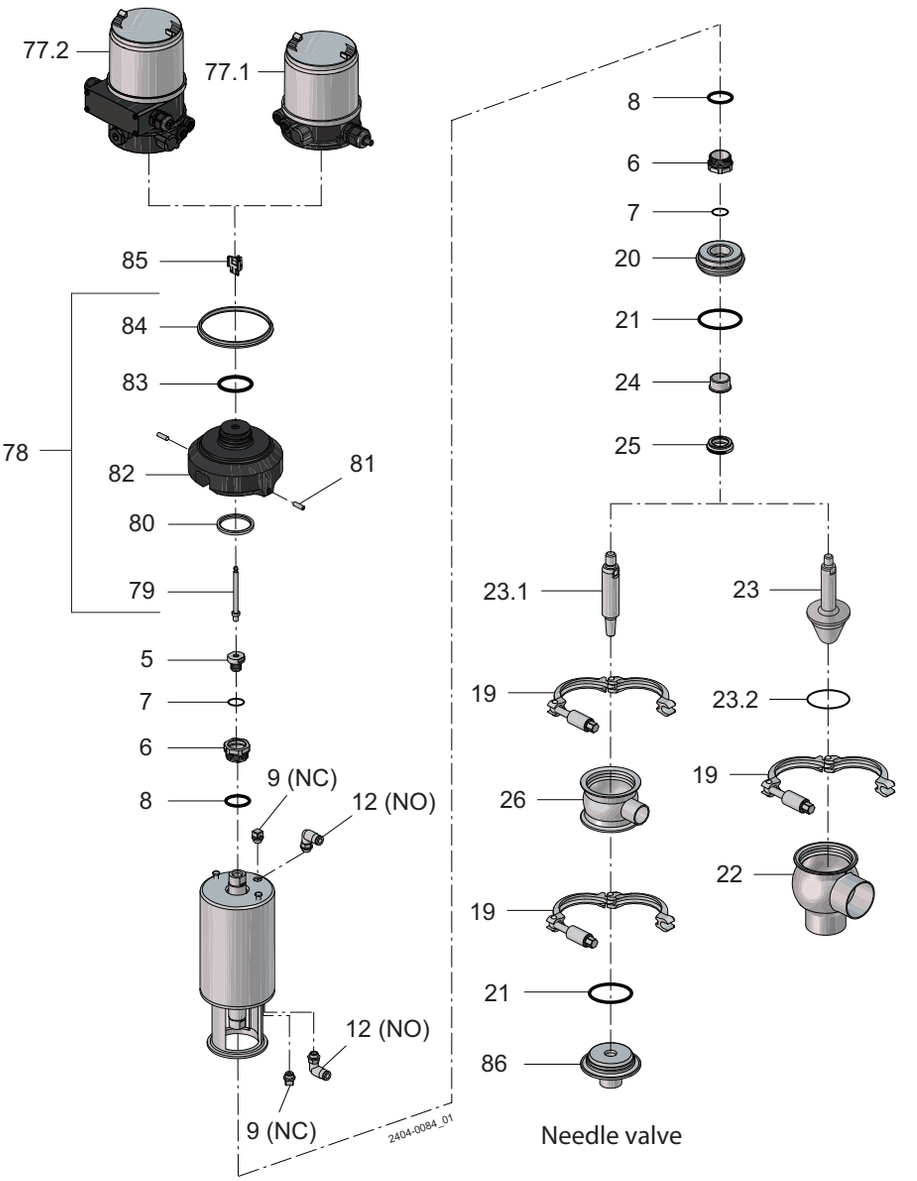

Pos	Qty	Denomination	25 mm DN25 Needle	25 mm DN25 Standard	DN40 38 mm	DN50 51 mm
Needle						
23	1	Needle, Kv 1	9634087802			
	1	Needle, Kv 1.5	9634087803			
	1	Needle, Kv 1.9	9634087804			
	1	Needle, Kv 2.5	9634087805			
	1	Needle, Kv 2.9	9634087806			
	1	Needle, Kv 6.7 - ISO		9634087901		
	1	Needle, Kv 6.7 - DIN		8010017423		
	1	Needle, Kv 13		9634088001		
Plug, complete, ISO, EPDM (standard)						
	1	Plug, Kv 4			8010000842	
	1	Plug, Kv 6			8010000843	
	1	Plug, Kv 10			8010000844	
	1	Plug, Kv 14			9613158901	
	1	Plug, Kv 16			9613168501	
	1	Plug, Kv 44			9613158902	
	1	Plug, Kv 25			9613168502	
	1	Plug, Kv 9				9613168503
	1	Plug, Kv 30				9613168504
	1	Plug, Kv 51				9613168505
	1	Plug, Kv 75				9613158903
Plug, complete, DIN, EPDM (standard)						
	1	Plug, Kv 4			8010000830	
	1	Plug, Kv 6			8010000831	
	1	Plug, Kv 10			8010000832	
	1	Plug, Kv 14			8010014473	
	1	Plug, Kv 16			9613168509	
	1	Plug, Kv 25			9613168510	
	1	Plug, Kv 44			9613158908	
	1	Plug, Kv 9				9613168511
	1	Plug, Kv 30				9613168512
	1	Plug, Kv 51				9613168513
	1	Plug, Kv 75				9613158909
Plug, complete, ISO, HNBR (standard)						
	1	Plug, Kv 4			8010000845	
	1	Plug, Kv 6			8010000846	
	1	Plug, Kv 10			8010000847	
Plug, complete, ISO, HNBR						
	1	Plug, Kv 14			9613158913	
	1	Plug, Kv 16			9613168517	
	1	Plug, Kv 44			9613158914	
	1	Plug, Kv 25			9613168518	
	1	Plug, Kv 9				9613168519
	1	Plug, Kv 30				9613168520
	1	Plug, Kv 51				9613168521
	1	Plug, Kv 75				9613158915
Plug, complete, DIN, HNBR (standard)						
	1	Plug, Kv 4			8010000835	
	1	Plug, Kv 6			8010000836	
	1	Plug, Kv 10			8010000837	
Plug, complete, DIN, HNBR						
	1	Plug, Kv 14			8010014474	
	1	Plug, Kv 16			9613168525	
	1	Plug, Kv 25			9613168526	
	1	Plug, Kv 44			9613158920	
	1	Plug, Kv 9				9613168527
	1	Plug, Kv 30				9613168528
	1	Plug, Kv 51				9613168529
	1	Plug, Kv 75				9613158921

If the actuator is marked with a danger warning do NOT attempt to cut the actuator open.



Do NOT attempt to disassemble the actuator due to spring under load danger!

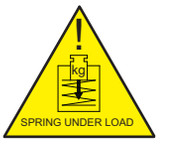

Do NOT attempt to cut the actuator open, due to spring under load danger!

1.8

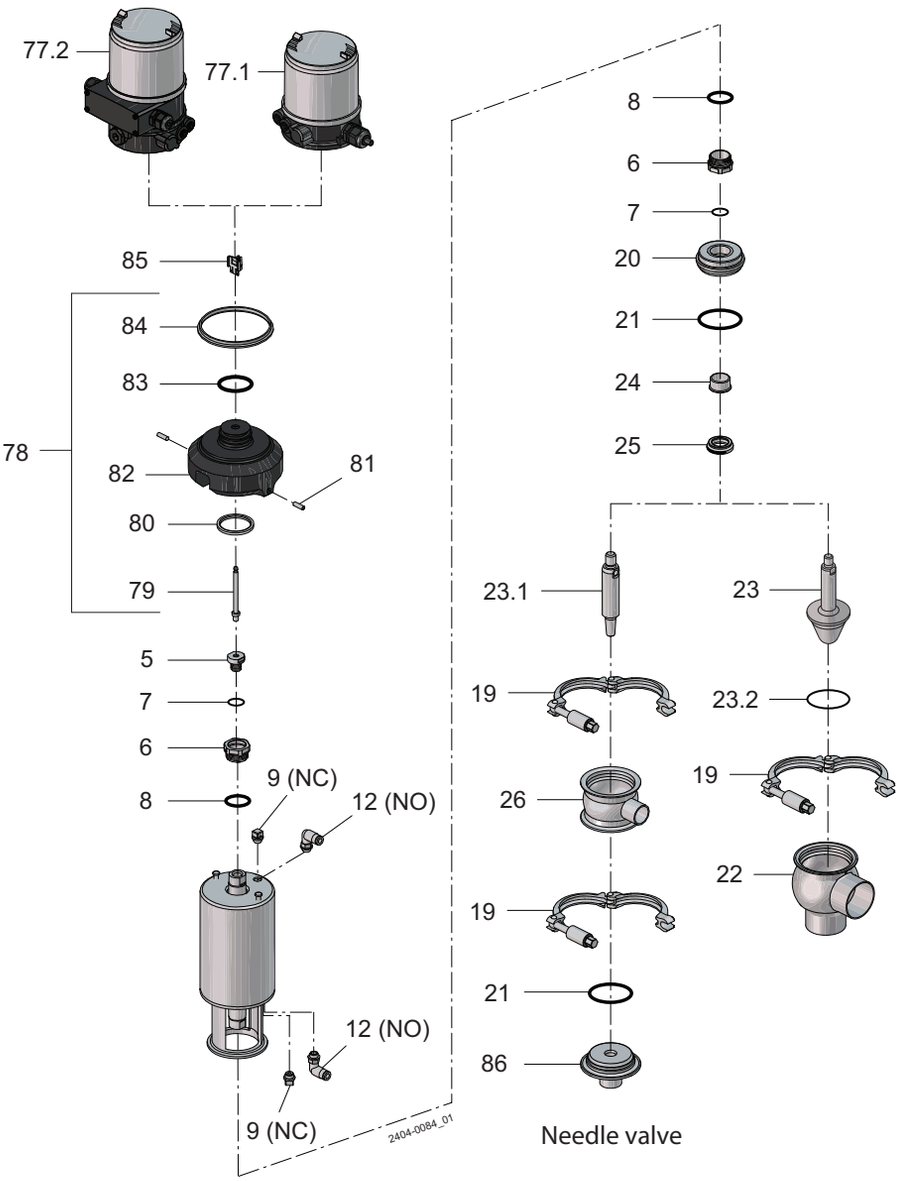

Pos	Qty	Denomination	25 mm DN25 Needle	25 mm DN25 Standard	DN40 38 mm	DN50 51 mm
Plug, complete, DIN, HNBR						
23	1	Plug, Kv 14			8010014474	
	1	Plug, Kv 16			9613168525	
	1	Plug, Kv 25			9613168526	
	1	Plug, Kv 44			9613158920	
	1	Plug, Kv 9				9613168527
	1	Plug, Kv 30				9613168528
	1	Plug, Kv 51				9613168529
	1	Plug, Kv 75				9613158921
Plug, complete, ISO, FPM (standard)						
	1	Plug, Kv 4			8010000838	
	1	Plug, Kv 6			8010000840	
	1	Plug, Kv 10			8010000841	
Plug, complete, ISO, FPM						
	1	Plug, Kv 14			9613158925	
	1	Plug, Kv 16			9613168533	
	1	Plug, Kv 25			9613168534	
	1	Plug, Kv 44			9613158926	
	1	Plug, Kv 9				9613168535
	1	Plug, Kv 30				9613168536
	1	Plug, Kv 51				9613168537
	1	Plug, Kv 75				9613158927
Plug, complete, DIN, FPM (standard)						
	1	Plug, Kv 4			8010000838	
	1	Plug, Kv 6			8010000840	
	1	Plug, Kv 10			8010000841	
Plug, complete, DIN, FPM						
	1	Plug, Kv 14			8010014475	
	1	Plug, Kv 16			9613168541	
	1	Plug, Kv 25			9613168542	
	1	Plug, Kv 44			9613158932	
	1	Plug, Kv 9				9613168543
	1	Plug, Kv 30				9613168544
	1	Plug, Kv 51				9613168545
	1	Plug, Kv 75				9613158933
23.1	1	Plug, ISO, Kv 4			8010000545	
	1	Plug, ISO, Kv 6			8010000546	
	1	Plug, ISO, Kv 10			8010000547	
	1	Plug, ISO, Kv 14			9613158801	
	1	Plug, ISO, Kv 16			9613165001	
	1	Plug, ISO, Kv 25			9613165002	
	1	Plug, ISO, Kv 44			9613158802	
	1	Plug, DIN, Kv 4			9615482401	
	1	Plug, DIN, Kv 6			9615482301	
	1	Plug, DIN, Kv 10			9615482201	
	1	Plug, DIN, Kv 14			8010014472	
	1	Plug, DIN, Kv 16			8010014477	
	1	Plug, DIN, Kv 25			9613165010	
	1	Plug, DIN, Kv 44			9613158808	
	1	Plug, ISO, Kv 9				9613165003
	1	Plug, ISO, Kv 30				9613165004
	1	Plug, ISO, Kv 51				9613165005
	1	Plug, ISO, Kv 75				9613158803
	1	Plug, DIN, Kv 9				9613165011
	1	Plug, DIN, Kv 30				9613165012
	1	Plug, DIN, Kv 51				9613165013
	1	Plug, DIN, Kv 75				9613158809
23.2	1	Plug seal, EPDM (standard)				
	1	Plug seal, HNBR				
	1	Plug seal, FPM				
		Plug seal, set (10 pcs.) EPDM			9614059404	9614059407
		Plug seal, set (10 pcs.) HNBR			9614059405	9614059408
		Plug seal, set (10 pcs.) FPM			9614059406	9614059409

If the actuator is marked with a danger warning do NOT attempt to cut the actuator open.



Do NOT attempt to disassemble the actuator due to spring under load danger!

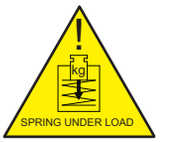

Do NOT attempt to cut the actuator open, due to spring under load danger!

1.8

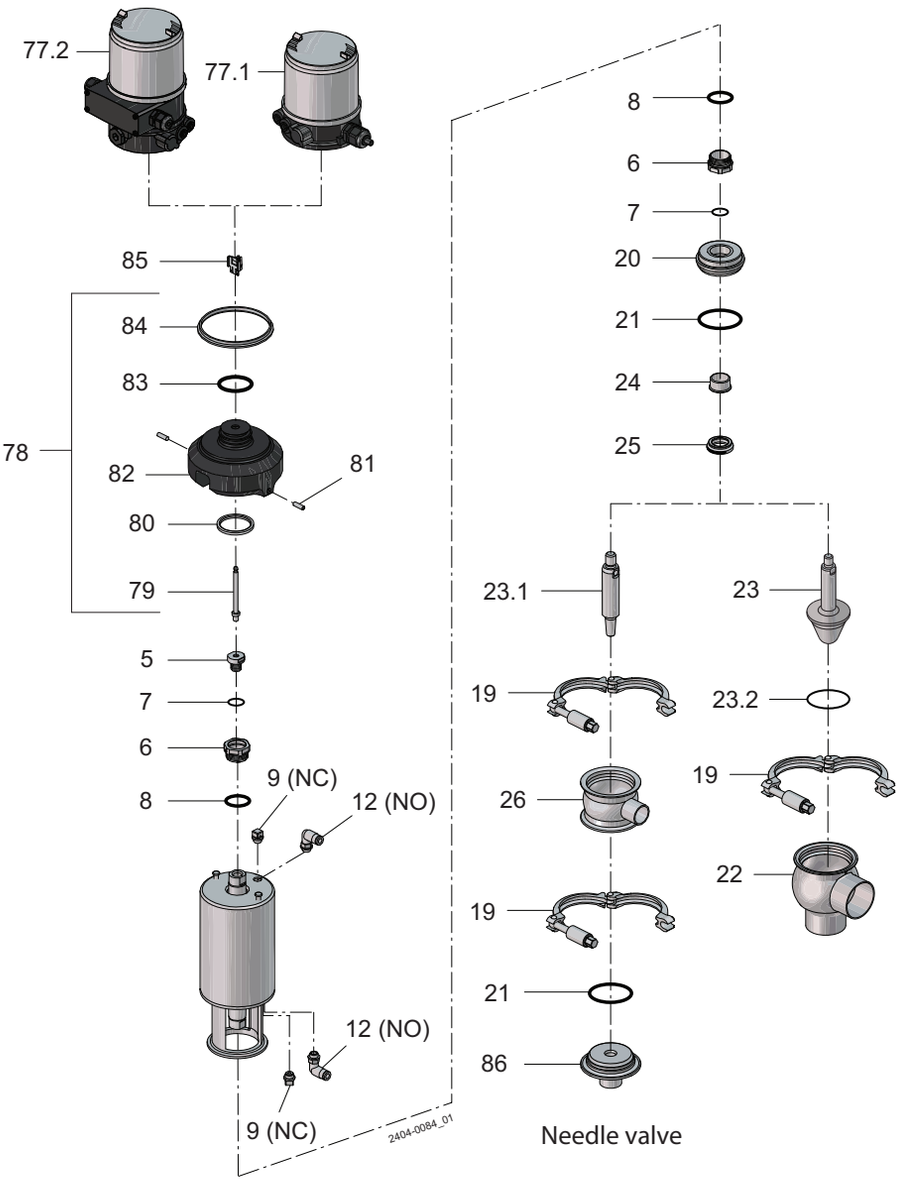

Service kits

		25 mm DN25 Needle	25 mm DN25 Standard	DN40 38 mm	DN50 51 mm
□	Service kit, actuator	9611926500	9611926500	9611926500	9611926500
Service kits for product wetted parts					
♦	Service kit, EPDM	9611926958	9611926961	9611926502	9611926503
♦	Service kit, HNBR	9611926959	9611926962	9611926508	9611926509
♦	Service kit, FPM	9611926960	9611926963	9611926514	9611926515

Parts marked with □ are included in the service kits (actuator)
Parts marked with ♦ are included in the service kits (product wetted parts)

TD 900618/8

If the actuator is marked with a danger warning do NOT attempt to cut the actuator open.



Do NOT attempt to disassemble the actuator due to spring under load danger!

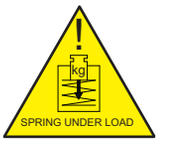

Do NOT attempt to cut the actuator open, due to spring under load danger!

1.8

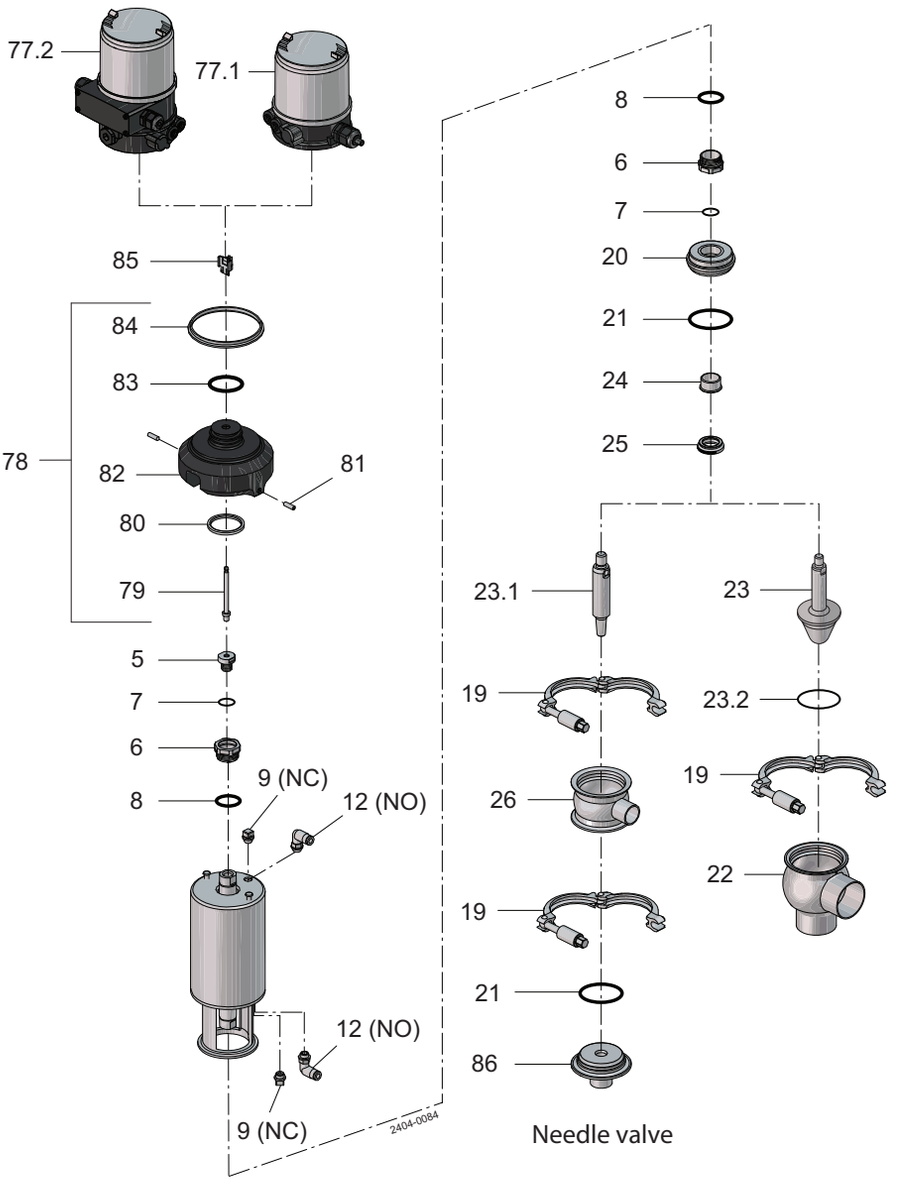

Pos		Qty	Denomination	63.5 mm DN65	76.1 mm DN80	101.6 mm DN100
Actuator						
			Actuator, complete (NO)	9613154803	9613154804	9613154805
			Actuator, complete (NC)	9613154808	9613154809	9613154810
			Actuator, complete (NO) - US	9613154848	9613154849	9613154850
			Actuator, complete (NC) - US	9613154853	9613154854	9613154855
6		2	Bushing			
7		2	O-ring			
8		2	O-ring			
9		1	Plug	9613414101	9613414101	9613414101
12		1	Air fitting	9611991988	9611991988	9611991988
		1	Air fitting - US	9611994682	9611994682	9611994682
76		1	Positioner 8694 (incl. Pos. 77 to 85) - without display	9611995266	9611995266	9611995266
		1	Positioner 8692 (incl. Pos. 77 to 85) - with display	9611995268	9611995268	9611995268
		1	Positioner 8694 (incl. Pos. 77 to 85) - US - without display	9634085943	9634085943	9634085943
		1	Positioner 8692 (incl. Pos. 77 to 85) - US - with display	9634085944	9634085944	9634085944
77.1		1	Positioner 8694 without display			
		1	Positioner 8692 with display			
77.2		1	Positioner 8694 without display - US			
		1	Positioner 8692 with display - US			
78		1	Adapter, cpl. (incl. Pos. 79 to 84)	9611995337	9611995337	9611995337
79		1	Spindle			
80		1	Special X-ring	9612569601	9612569601	9612569601
81		2	Allen screw	9611993409	9611993409	9611993409
82		1	Adapter			
83		1	O-ring	9611995273	9611995273	9611995273
84		1	Gasket for adapter	9611995274	9611995274	9611995274
85		1	Puck sensorpad, cpl.	9611995275	9611995275	9611995275
Clamp						
19		2	Clamp			
		1	Clamp	9612939305	9612939306	9612939307
Bonnet						
20		1	Bonnet	9613127104	9613127105	9613127106
21	♦	2	O-ring, EPDM (standard)			
	♦	2	O-ring, HNBR			
	♦	2	O-ring, FPM			
	♦	1	O-ring, EPDM (standard)			
	♦	1	O-ring, HNBR			
	♦	1	O-ring, FPM			
			O-ring, set (10 pcs.), EPDM	9614059428	9614059431	9614059434
			O-ring, set (10 pcs.), HNBR	9614059429	9614059432	9614059435
			O-ring, set (10 pcs.), FPM	9614059430	9614059433	9614059436
24		1	Bushing	9613125002	9613125002	9613125002
25	♦	1	Lip seal, EPDM (standard)			
	♦	1	Lip seal, HNBR			
	♦	1	Lip seal, FPM			
		1	Lip seal, set (10 pcs.) EPDM	9614059419	9614059419	9614059419
		1	Lip seal, set (10 pcs.) HNBR	9614059420	9614059420	9614059420
		1	Lip seal, set (10 pcs.) FPM	9614059421	9614059421	9614059421
Valve body						
22		1	Valve body, lower, 2 ports ISO	9613139507	9613139509	9613139511
		1	Valve body, lower, 3 ports ISO	9613139508	9613139510	9613139512
		1	Valve body, lower, 2 ports DIN	9613139607	9613139609	9613139611
		1	Valve body, lower, 3 ports DIN	9613139608	9613139610	9613139612
		1	Valve body, lower, 2 ports, clamp - US	9613161659	9613161673	9613161687
		1	Valve body, lower, 3 ports, clamp - US	9613161668	9613161682	9613161696

If the actuator is marked with a danger warning do NOT attempt to cut the actuator open.



Do NOT attempt to disassemble the actuator due to spring under load danger!

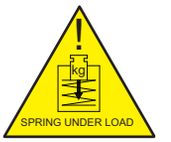

Do NOT attempt to cut the actuator open, due to spring under load danger!

1.8

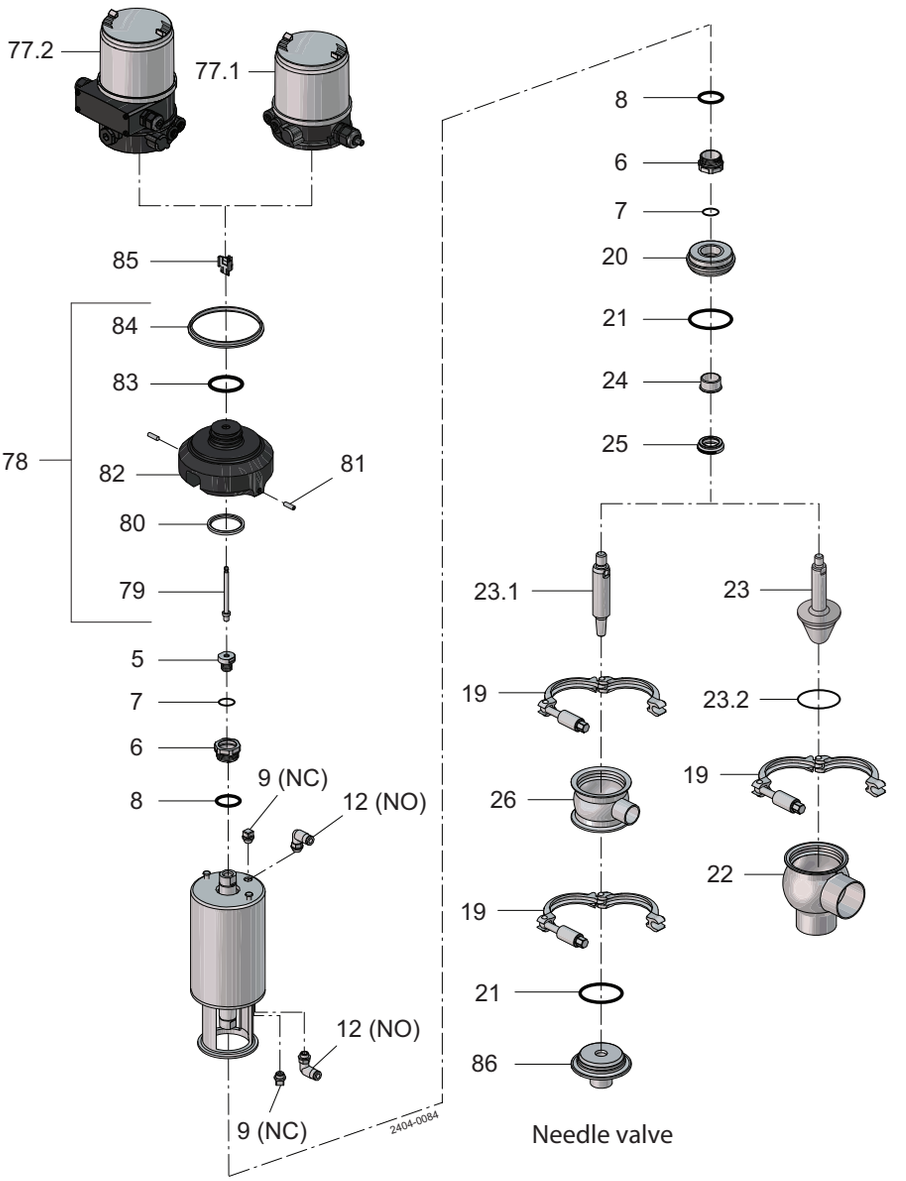

Pos	Qty	Denomination	63.5 mm/ DN65	76.1 mm DN80	101.6 mm DN100
Plug, complete, ISO, EPDM (standard)					
23	1	Plug, Kv 26	9613168507		
	1	Plug, Kv 107	9613158904		
	1	Plug, Kv 59		9613168601	
	1	Plug, Kv 101		9613168508	
	1	Plug, Kv 172		9613158905	
	1	Plug, Kv 125			9613168602
	1	Plug, Kv 164			9613168603
	1	Plug, Kv 250			9613158906
Plug, complete, DIN, EPDM (standard)					
	1	Plug, Kv 26	9613168515		
	1	Plug, Kv 107	9613158910		
	1	Plug, Kv 59		9613168604	
	1	Plug, Kv 101		9613168516	
	1	Plug, Kv 172		9613158911	
	1	Plug, Kv 125			9613168605
	1	Plug, Kv 164			9613168606
	1	Plug, Kv 250			9613158912
Plug, complete, ISO, HNBR (standard)					
	1	Plug, Kv 26	9613168523		
	1	Plug, Kv 107	9613158916		
	1	Plug, Kv 59		9613168607	
	1	Plug, Kv 101		9613168524	
	1	Plug, Kv 172		9613158917	
	1	Plug, Kv 125			9613168608
	1	Plug, Kv 164			9613168609
	1	Plug, Kv 250			9613158918
Plug, complete, DIN, HNBR					
	1	Plug, Kv 26	9613168531		
	1	Plug, Kv 107	9613158922		
	1	Plug, Kv 59		9613168610	
	1	Plug, Kv 101		9613168532	
	1	Plug, Kv 172		9613158923	
	1	Plug, Kv 125			9613168611
	1	Plug, Kv 164			9613168612
	1	Plug, Kv 250			9613158924
Plug, complete, ISO, FPM					
	1	Plug, Kv 26	9613168539		
	1	Plug, Kv 107	9613158928		
	1	Plug, Kv 59		9613168613	
	1	Plug, Kv 101		9613168540	
	1	Plug, Kv 172		9613158929	
	1	Plug, Kv 125			9613168614
	1	Plug, Kv 164			9613168615
	1	Plug, Kv 250			9613158930
Plug, complete, DIN, FPM					
	1	Plug, Kv 26	9613168547		
	1	Plug, Kv 107	9613158934		
	1	Plug, Kv 59		9613168616	
	1	Plug, Kv 101		9613168548	
	1	Plug, Kv 172		9613158935	
	1	Plug, Kv 125			9613168617
	1	Plug, Kv 164			9613168618
	1	Plug, Kv 250			9613158936

If the actuator is marked with a danger warning do NOT attempt to cut the actuator open.



Do NOT attempt to disassemble the actuator due to spring under load danger!

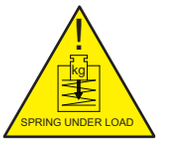

Do NOT attempt to cut the actuator open, due to spring under load danger!

1.8

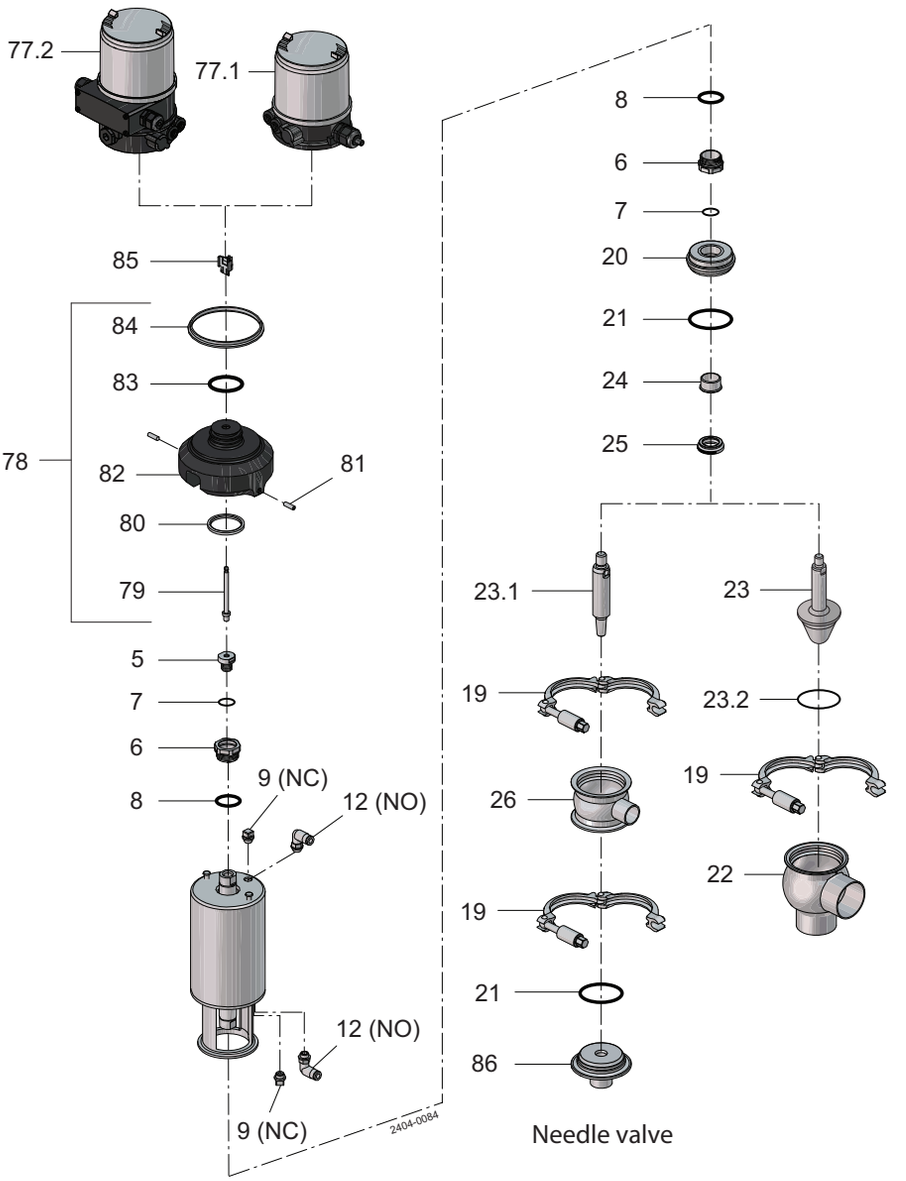

Pos	Qty	Denomination	63.5 mm DN65	76.1 mm DN80	101.6 mm DN100
23.1	1	Plug, ISO, Kv 26	9613165007		
	1	Plug, ISO, Kv 107	9613158804		
	1	Plug, DIN, Kv 26	9613165015		
	1	Plug, DIN, Kv 107	9613158810		
	1	Plug, ISO, Kv 59		9613167001	
	1	Plug, ISO, Kv 101		9613165008	
	1	Plug, ISO, Kv 172		9613158805	
	1	Plug, DIN, Kv 59		9613167004	
	1	Plug, DIN, Kv 101		9613165016	
	1	Plug, DIN, Kv 172		9613158811	
	1	Plug, ISO, Kv 125			9613167002
	1	Plug, ISO, Kv 164			9613167003
	1	Plug, ISO, Kv 250			9613158806
	1	Plug, DIN, Kv 125			9613167005
	1	Plug, DIN, Kv 164			9613167006
	1	Plug, DIN, Kv 250			9613158812
23.2♦	1	Plug seal, EPDM (standard)			
	1	Plug seal, HNBR			
	1	Plug seal, FPM			
	1	Plug seal, set (10 pcs.) EPDM	9614059410	9614059413	9614059416
	1	Plug seal, set (10 pcs.) HNBR	9614059411	9614059414	9614059417
	1	Plug seal, set (10 pcs.) FPM	9614059412	9614059415	9614059418

Recommended spare parts: Service kits

Service kits

		63.5 mm DN65	76.1 mm DN80	101.6 mm DN100
□	**Service kit, actuator**	**9611926500**	**9611926500**	**9611926500**
Service kits for product wetted parts				
♦	**Service kit, EPDM**	**9611926504**	**9611926505**	**9611926506**
♦	**Service kit, HNBR**	**9611926510**	**9611926511**	**9611926512**
♦	**Service kit, FPM**	**9611926516**	**9611926517**	**9611926518**

Parts marked with □ are included in the service kits (actuator)
Parts marked with♦are included in the service kits (product wetted parts)
Tool for bushing (pos. 24) 9613160901

TD 900618/8

If the actuator is marked with a danger warning do NOT attempt to cut the actuator open.



Do NOT attempt to disassemble the actuator due to spring under load danger.



Do NOT attempt to cut the actuator open, due to spring under load danger.

AND



Do NOT attempt to cut the actuator open, due to spring under load danger.

1.8

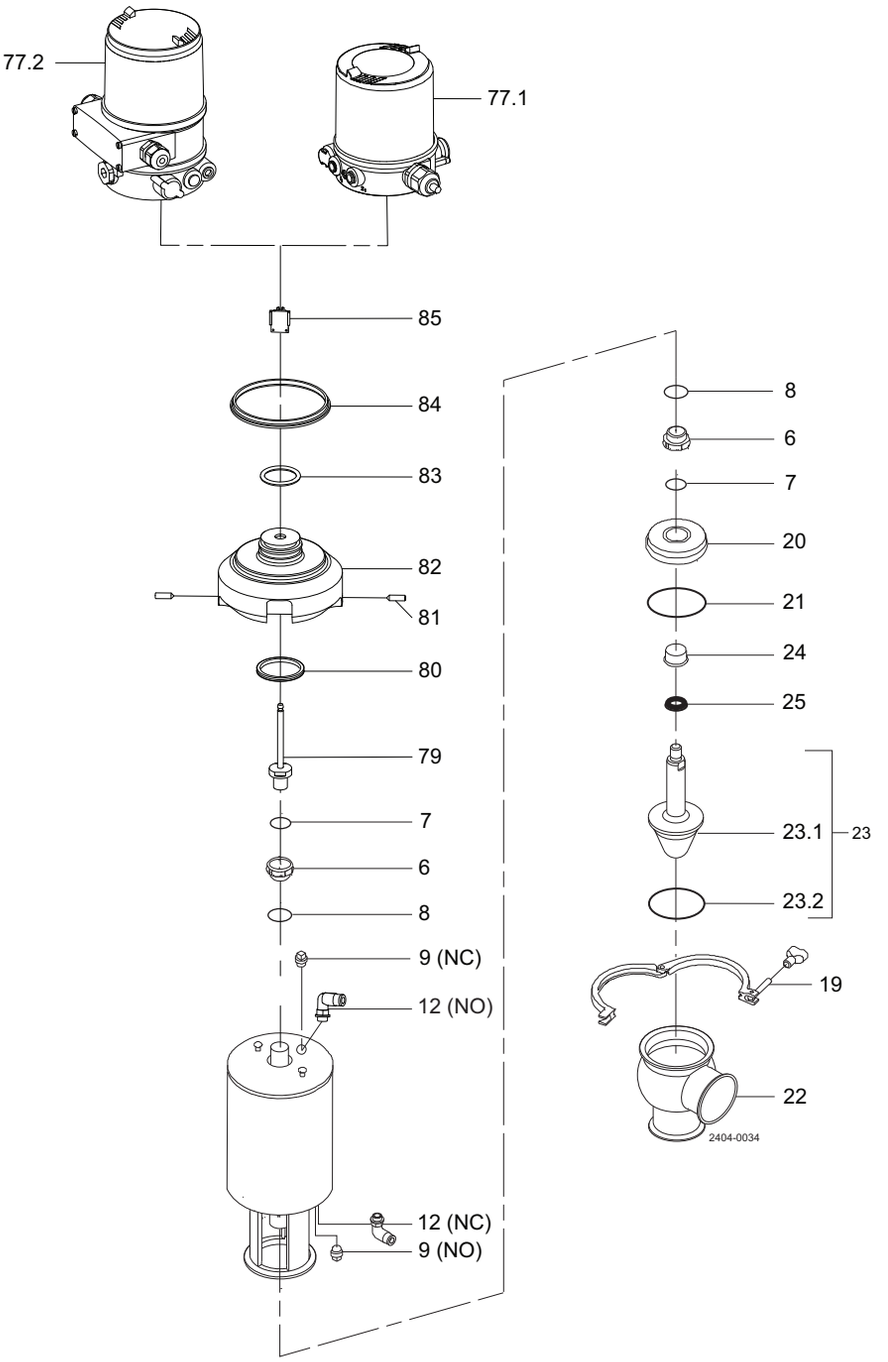

Pos	Qty	Denomination	1½"	2"	2½"	3"	4"
		Actuator, complete , (NO)	9613154831	9613154832	9613154833	9613154834	9613154835
		Actuator, complete , (NC)	9613154836	9613154837	9613154838	9613154839	9613154840
6 ●	2	Bushing					
7 ●	2	O-ring					
8 ●	2	O-ring					
9	1	Plug (NO+NC)	9613414101	9613414101	9613414101	9613414101	9613414101
12	1	Air fitting (NC)	9611994682	9611994682	9611994682	9611994682	9611994682
76	1	Positioner, 8694 (incl. Pos. 77 to 85)	9634085943	9634085943	9634085943	9634085943	9634085943
	1	Positioner, 8692 (incl. Pos. 77 to 85)	9634085944	9634085944	9634085944	9634085944	9634085944
77.1	1	Positioner 8694 without display					
77.2	1	Positioner 8692 with display					
79	1	Spindle					
80	1	Special X-ring	9612569601	9612569601	9612569601	9612569601	9612569601
81	2	Allen screw	9611993409	9611993409	9611993409	9611993409	9611993409
82	1	Adapter					
83	1	O-ring	9611995273	9611995273	9611995273	9611995273	9611995273
84	1	Gasket for adapter	9611995274	9611995274	9611995274	9611995274	9611995274
85	1	Puck sensorpad, cpl., (Green)	9611995275	9611995275	9611995275	9611995275	9611995275
	1	Puck sensorpad, cpl., (Gray)					
Clamp							
19	1	Clamp	9612939316	9612939317	9612939318	9612939319	9612939320
Bonnet							
20	1	Bonnet	9613127102	9613127103	9613127104	9613127105	9613127106
21 □	1	O-ring, EPDM (standard)					
	1	O-ring, HNBR					
	1	O-ring, FPM					
		O-ring, set (10 pcs.) EPDM	9614059422	9614059425	9614059428	9614059431	9614059434
		O-ring, set (10 pcs.) HNBR	9614059423	9614059426	9614059429	9614059432	9614059435
		O-ring, set (10 pcs.) FPM	9614059424	9614059427	9614059430	9614059433	9614059436
24	1	Bushing	9613125002	9613125002	9613125002	9613125002	9613125002
25 □	1	Lip seal, EPDM (standard)					
	1	Lip seal, HNBR					
	1	Lip seal, FPM					
		Lip seal, set (10 pcs.) EPDM	9614059419	9614059419	9614059419	9614059419	9614059419
		Lip seal, set (10 pcs.) HNBR	9614059420	9614059420	9614059420	9614059420	9614059420
		Lip seal, set (10 pcs.) FPM	9614059421	9614059421	9614059421	9614059421	9614059421
Valve Body							
22	1	Valve body, lower, 2 ports, clamp	9613161603	9613161605	9613161607	9613161609	9613161611
	1	Valve body, lower, 3 ports, clamp	9613161604	9613161606	9613161608	9613161610	9613161612
	1	Valve body, lower 2 ports, welding ends	9613139515	9613139517	9613139519	9613139521	9613139523
	1	Valve body, lower 3 ports, welding ends	9613139516	9613139518	9613139520	9613139522	9613139524
Valve Plug							
23	1	Plug, complete, EPDM (standard) Cv 16	9613158901				
	1	Plug, complete, EPDM (standard) Cv 52	9613158902				
	1	Plug, complete, EPDM (standard) Cv 19	9613168501				
	1	Plug, complete, EPDM (standard) Cv 29	9613168502				
	1	Plug, complete, EPDM (standard) Cv 88		9613158903			
	1	Plug, complete, EPDM (standard) Cv 11		9613168503			
	1	Plug, complete, EPDM (standard) Cv 35		9613165504			
	1	Plug, complete, EPDM (standard) Cv 60		9613158505			
	1	Plug, complete, EPDM (standard) Cv 126			9613158904		
	1	Plug, complete, EPDM (standard) Cv 30			9613168507		
	1	Plug, complete, EPDM (standard) Cv 202				9613158905	
	1	Plug, complete, EPDM (standard) Cv 119				9613168508	
	1	Plug, complete, EPDM (standard) Cv 69				9613168601	
	1	Plug, complete, EPDM (standard) Cv 290					9613158906
	1	Plug, complete, EPDM (standard) Cv 148					9613168602
	1	Plug, complete, EPDM (standard) Cv 193					9613168603
	1	Plug, complete, HNBR Cv 16	9613158913				
	1	Plug, complete, HNBR Cv 52	9613158914				
	1	Plug, complete, FPM Cv 19	9613158917				
	1	Plug, complete, FPM Cv 29	9613158918				
	1	Plug, complete, HNBR Cv 88		9613158915			
	1	Plug, complete, HNBR Cv 11		9613158919			
	1	Plug, complete, HNBR Cv 35		9613158920			
	1	Plug, complete, HNBR Cv 60		9613158921			
	1	Plug, complete, HNBR Cv 126			9613158916		
	1	Plug, complete, HNBR Cv 30			9613158923		
	1	Plug, complete, HNBR Cv 202				9613158917	
	1	Plug, complete, HNBR Cv 119				9613168524	
	1	Plug, complete, HNBR Cv 69				9613168507	
	1	Plug, complete, HNBR Cv 290					9613158918
	1	Plug, complete, HNBR Cv 148					9613168608
	1	Plug, complete, HNBR Cv 193					9613168609

If the actuator is marked with a danger warning do NOT attempt to cut the actuator open.



Do NOT attempt to disassemble the actuator due to spring under load danger.



Do NOT attempt to cut the actuator open, due to spring under load danger.

AND



Do NOT attempt to cut the actuator open, due to spring under load danger.

1.8

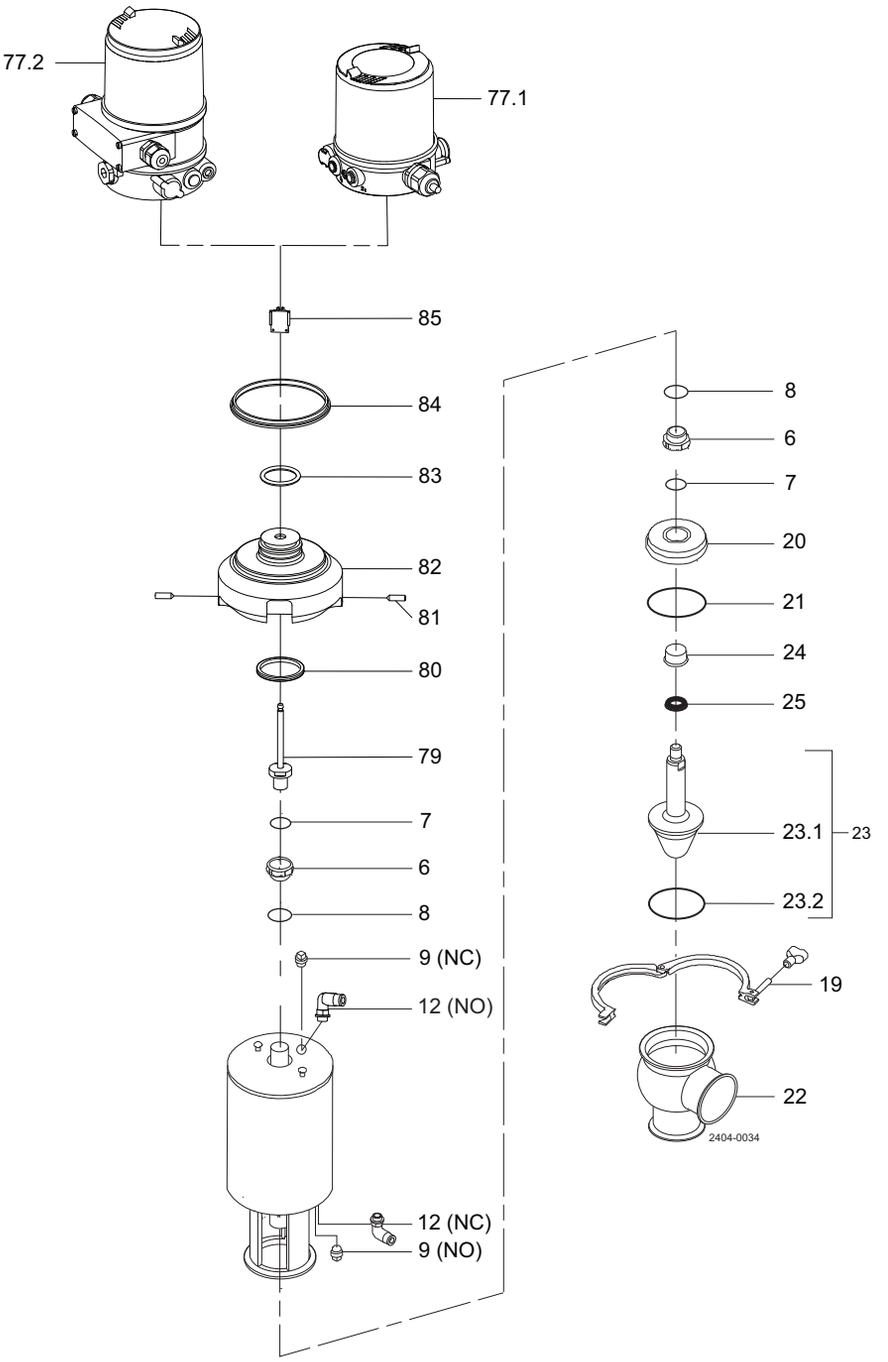

Pos	Qty	Denomination	1½"	2"	2½"	3"	4"
	1	Plug, complete, FPM Cv 16	9613158925				
	1	Plug, complete, FPM Cv 52	9613158926				
	1	Plug, complete, FPM Cv 19	9613168533				
	1	Plug, complete, FPM Cv 29	9613168534				
	1	Plug, complete, FPM Cv 88		9613158927			
	1	Plug, complete, FPM Cv 11		9613168535			
	1	Plug, complete, FPM Cv 35		9613168536			
	1	Plug, complete, FPM Cv 60		9613168537			
	1	Plug, complete, FPM Cv 126			9613158928		
	1	Plug, complete, FPM Cv 30			9613168539		
	1	Plug, complete, FPM Cv 202				9613158929	
	1	Plug, complete, FPM Cv 119				9613168540	
	1	Plug, complete, FPM Cv 69				9613168513	
	1	Plug, complete, FPM Cv 290					9613158930
	1	Plug, complete, FPM Cv 148					9613168614
	1	Plug, complete, FPM Cv 193					9613168615
23.1	1	Plug, Cv 16	9613158801				
	1	Plug, Cv 52	9613158802				
	1	Plug, Cv 19	9613165001				
	1	Plug, Cv 29	9613165002				
	1	Plug, Cv 88		9613158803			
	1	Plug, Cv 11		9613165003			
	1	Plug, Cv 35		9613165004			
	1	Plug, Cv 60		9613165005			
	1	Plug, Cv 126			9613165004		
	1	Plug, Cv 30			9613165007		
	1	Plug, Cv 202				9613158805	
	1	Plug, Cv 119				9613165008	
	1	Plug, Cv 69				9613167001	
	1	Plug, Cv 290					9613158806
	1	Plug, Cv 148					9613167002
	1	Plug, Cv 193					9613167003
23.2□	1	Plug seal, EPDM (standard)					
	1	Plug seal, HNBR					
	1	Plug seal, FPM					
		Plug seal, set (10 pcs.) EPDM	9614059404	9614059407	9614059410	9614059413	9614059416
		Plug seal, set (10 pcs.) HNBR	9614059405	9614059408	9614059411	9614059414	9614059417
		Plug seal, set (10 pcs.) FPM	9614059406	9614059409	9614059412	9614059415	9614059418

Service kit

		1½"	2"	2½"	3"	4"
•	**Service kit, actuator**	**9611926500**	**9611926500**	**9611926500**	**9611926500**	**9611926500**
□	**Service kit, EPDM**	**9611926502**	**9611926503**	**9611926504**	**9611926505**	**9611926506**
□	**Service kit, HNBR**	**9611926508**	**9611926509**	**9611926510**	**9611926511**	**9611926512**
□	**Service, FPM**	**9611926514**	**9611926515**	**9611926516**	**9611926517**	**9611926518**

Parts marked with • are included in the service kits (actuator)

Parts marked with □ are included in the service kits (product wetted parts)

Tool for bushing (pos. 24) 9613160901

TD 900-616/4

If the actuator is marked with a danger warning do NOT attempt to cut the actuator open.



Do NOT attempt to disassemble the actuator due to spring under load danger!

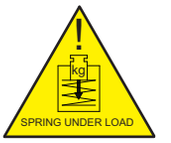

Do NOT attempt to cut the actuator open, due to spring under load danger!

1.8

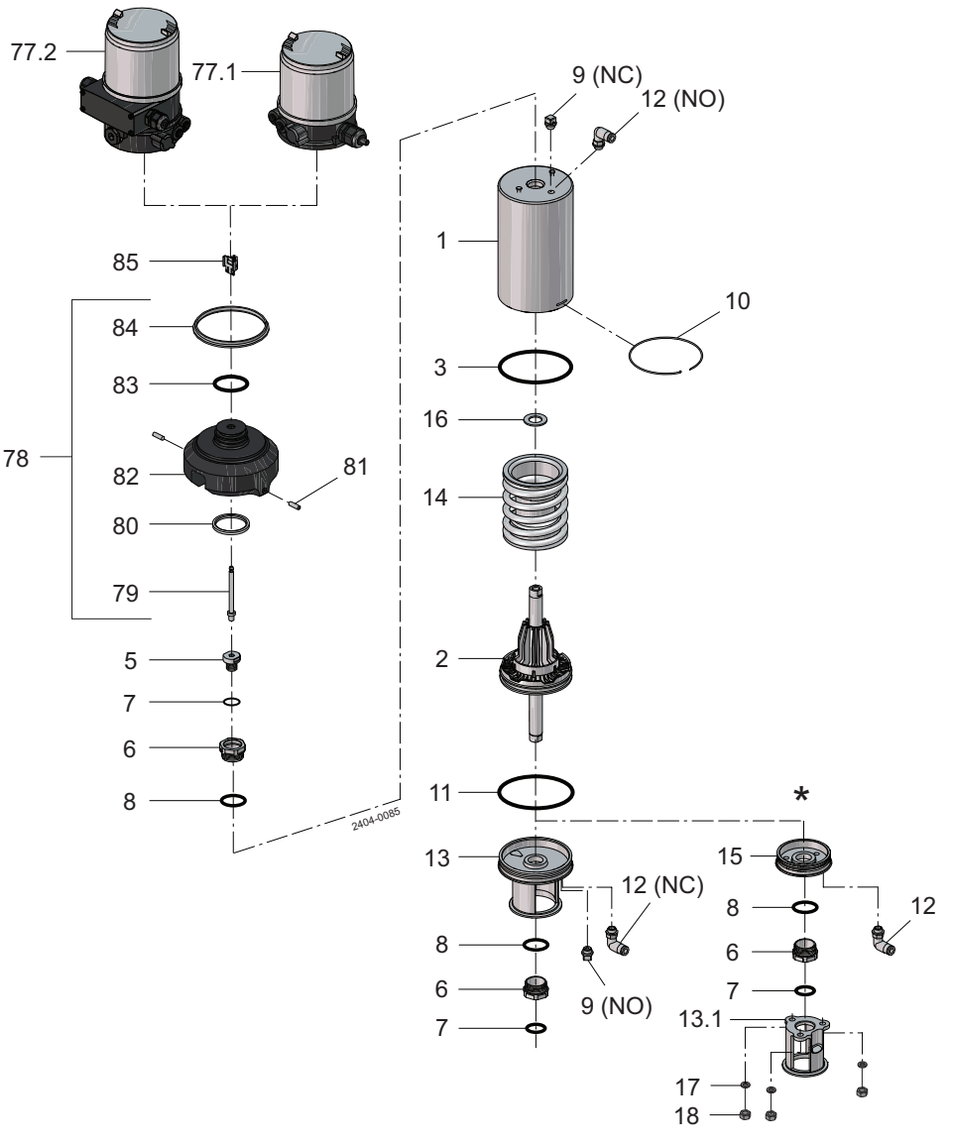

*) “Removable yoke bolts” version, product from 2006 to June 2016.
Replaced by “yoke without bolts” (13)

Pos		Qty	Denomination	25 mm DN25 Needle	25 mm DN25 Standard	DN40 38 mm	DN50 51 mm
			Actuator, complete (NO)	9613185301	9613185301	9613185301	9613185302
			Actuator, complete (NC)	9613185306	9613185306	9613185306	9613185307
			Actuator, complete (A/A)				
			Actuator - US, complete (NO)	9613185346	9613185346	9613185346	9613185347
			Actuator - US, complete (NC)	9613185351	9613185351	9613185351	9613185352
			Actuator - US, complete (A/A)				
1		1	Cylinder	9613142511	9613142511	9613142511	9613142512
2		1	Piston	9613132201	9613132201	9613132201	9613132301
3	•	1	O-ring				
6	•	2	Bushing				
7	•	2	O-ring				
8	•	2	O-ring				
9		1	Plug, NO+NC	9613414101	9613414101	9613414101	9613414101
10		1	Lock wire	9613143201	9613143201	9613143201	9613143202
11	•	1	O-ring				
12		1	Air fitting, (NC)	9611991988	9611991988	9611991988	9611991988
13		1	Yoke without bolts (0616 -)	9613154301	9613154301	9613154301	96131544402
14		1	Spring assembly	9613132501	9613132501	9613132501	9613132502
16	•	1	Support disc				
76		1	Positioner 8694, (incl. pos. 77 to 85)	9611995266	9611995266	9611995266	9611995266
		1	Positioner 8692, (incl. pos. 77 to 85)	9611995268	9611995268	9611995268	9611995268
77.1		1	Positioner 8694 without display				
		1	Positioner 8692 with display				
77.2		1	Positioner 8694 without display - US				
		1	Positioner 8692 with display - US				
78		1	Adapter, cpl. (incl. Pos. 79 to 84)				
79		1	Spindle				
80		1	Special X-ring	9612569601	9612569601	9612569601	9612569601
81		2	Allen screw	9611993409	9611993409	9611993409	9611993409
82		1	Adapter				
83		1	O-ring	9611995273	9611995273	9611995273	9611995273
84		1	Gasket for adapter	9611995274	9611995274	9611995274	9611995274
85		1	Puck sensorpad, cpl.	9611995275	9611995275	9611995275	9611995275
Removeable yoke with bolts - OBSOLETE use position 13							
13.1		1	Yoke (- 0616)				
15		1	Bottom (- 0616)				
17		3	Washer (- 0616)				
18		3	Nut (- 0616)				

Parts marked with • are included in the service kits for actuator.
Recommended spare parts: Service kits.

TD900-619/9

Service kits

		25 mm DN25 Needle	25 mm DN25 Standard	DN40 38 mm	DN50 51 mm
•	Service kit, actuator	9611926497	9611926497	9611926497	9611926498

If the actuator is marked with a danger warning do NOT attempt to cut the actuator open.



Do NOT attempt to disassemble the actuator due to spring under load danger!

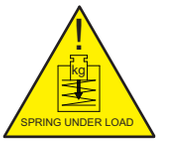

Do NOT attempt to cut the actuator open, due to spring under load danger!

1.8

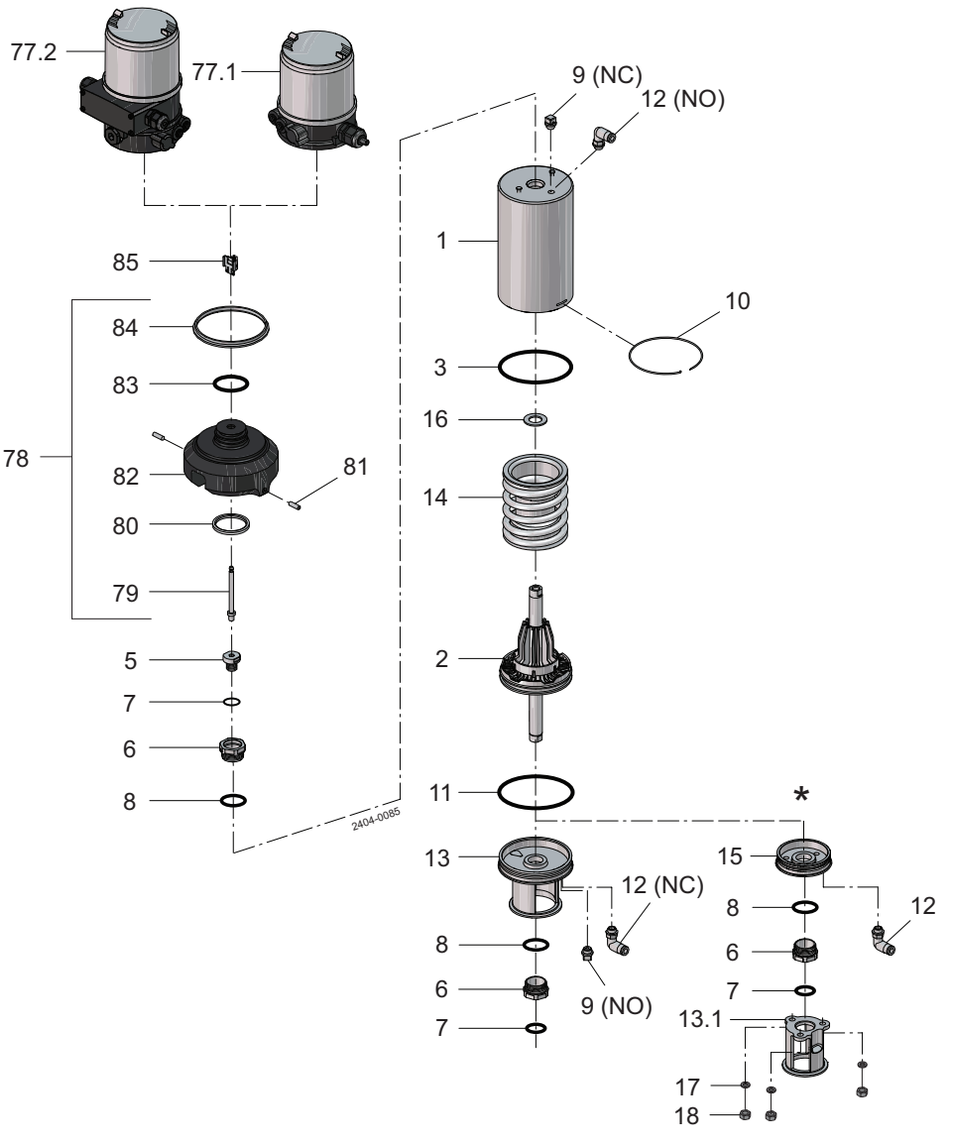

*) “Removable yoke bolts” version, product from 2006 to June 2016.
Replaced by “yoke without bolts” (13)

Pos		Qty	Denomination	63.5 mm DN65	76.1 mm DN80	101.6 mm DN100
			Actuator, complete (NO)	9613185303	9613185304	9613185305
			Actuator, complete (NC)	9613185308	9613185309	9613185310
			Actuator, complete (A/A)			
			Actuator, complete (A/A)	9613185313	9613185314	9613185315
			Actuator - US, complete (NO)	9613185348	9613185349	9613185350
			Actuator - US, complete (NC)	9613185353	9613185354	9613185355
			Actuator - US, complete (A/A)			
1		1	Cylinder	9613142512	9613142513	9613142513
2		1	Piston	9613132301	9613132401	9613132401
3	•	1	O-ring			
6	•	2	Bushing			
7	•	2	O-ring			
8	•	2	O-ring			
9		1	Plug, NO+NC	9613414101	9613414101	9613414101
10		1	Lock wire	9613143202	9613143203	9613143203
11	•	1	O-ring			
12		1	Air fitting, (NC)	9611991988	9611991988	9611991988
13		1	Yoke without bolts (0616 -)	9613154502	9613154603	9613154703
14		1	Spring assembly	9613132502	9613132503	9613132503
16	•	1	Support disc			
76		1	Positioner, 8694, (incl. pos. 77 to 85)	9611995266	9611995266	9611995266
		1	Positioner, 8692, (incl. pos. 77 to 85)	9611995268	9611995268	9611995268
77.1		1	Positioner 8694 without display			
		1	Positioner 8692 with display			
77.2		1	Positioner 8694 without display - US			
		1	Positioner 8692 with display - US			
78		1	Adapter, cpl. (incl. Pos. 79 to 84)			
79		1	Spindle			
80		1	Special X-ring	9612569601	9612569601	9612569601
81		2	Allen screw	9611993409	9611993409	9611993409
82		1	Adapter			
83		1	O-ring	9611995273	9611995273	9611995273
84		1	Gasket for adapter	9611995274	9611995274	9611995274
85		1	Puck sensorpad, cpl.	9611995275	9611995275	9611995275
		1	Puck sensorpad, cpl. (green)	9611995371	9611995371	9611995371
Removeable yoke with bolts - OBSOLETE use position 13						
13.1		1	Yoke (- 0616)			
15		1	Bottom (- 0616)			
17		3	Washer (- 0616)			
18		3	Nut (- 0616)			

Parts marked with • are included in the service kits for actuator.

Recommended spare parts: Service kits.

TD900-619/9

Service kits

		63.5 mm DN65	76.1 mm DN80	101.6 mm DN100
•	Service kit, actuator	9611926498	9611926499	9611926499

If the actuator is marked with a danger warning do NOT attempt to cut the actuator open.



Do NOT attempt to disassemble the actuator due to spring under load danger.



Do NOT attempt to cut the actuator open, due to spring under load danger.

AND



Do NOT attempt to cut the actuator open, due to spring under load danger.

1.8

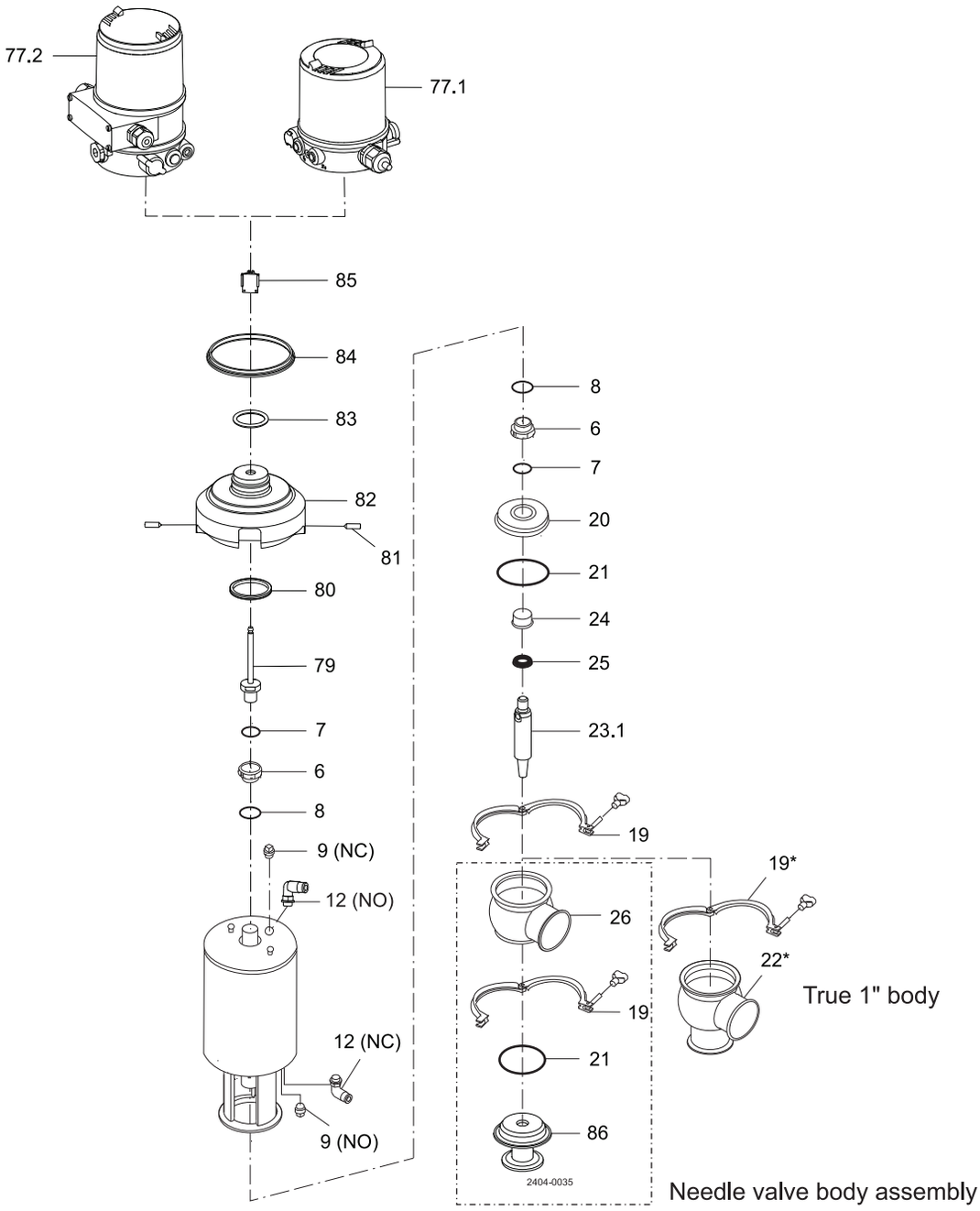

Pos		Qty	Denomination	1” Needle	1” Std
Actuator					
			Actuator, complete (NO)	9613185316	9613185316
			Actuator, complete (NC)	9613185321	9613185321
6	□	2	Bushing		
7	□	2	O-ring		
8	□	2	O-ring		
9		1	Plug	9613414101	9613414101
12		1	Air fitting	9611994682	9611994682
76		1	Positioner 8694, (incl. Pos. 77 to 85)	9634085943	9634085943
		1	Positioner 8692, (incl. Pos. 77 to 85)	9634085944	9634085944
77.1		1	Positioner 8694, without display		
77.2		1	Positioner 8692, with display		
79		1	Spindle		
80		1	Special X-ring	9612569601	9612569601
81		2	Allen screw	9611993409	9611993409
82		1	Adapter		
83		1	O-ring	9611995273	9611995273
84		1	Gasket for adapter	9611995274	9611995274
85		1	Puck sensorpad, cpl., (Green)	9611995275	9611995275
		1	Puck sensorpad, cpl., (Gray)		
Clamp					
19		2	Clamp	9612939316	
		1	Clamp		9612939316
Bonnet					
20		1	Bonnet	9613127102	9613127102
21	♦	2	O-ring, EPDM (standard)		
	♦	2	O-ring, HNBR		
	♦	2	O-ring, FPM		
	♦	1	O-ring, EPDM (standard)		
	♦	1	O-ring, HNBR		
	♦	1	O-ring, FPM		
		1	O-ring, set (10 pcs) EPDM	9614059422	9614059422
		1	O-ring, set (10 pcs) HNBR	9614059423	9614059423
		1	O-ring, set (10 pcs) FPM	9614059424	9614059424
24		1	Bushing	9613125002	9613125002
25		1	Lip seal, EPDM (standard)		
		1	Lip seal, HNBR		
		1	Lip seal, FPM		
		1	Lip seal, set (10 pcs) EPDM	9614059419	9614059419
		1	Lip seal, set (10 pcs) HNBR	9614059420	9614059420
		1	Lip seal, set (10 pcs) FPM	9614059421	9614059421
Valve Body					
22		1	Valve body, lower, 2 ports, clamp		9613161601
		1	Valve body, lower, 3 ports, clamp		
		1	Valve body, lower, 2 ports, welding ends		9613139513
		1	Valve body, lower, 3 ports, welding ends		
26		1	Valve body, upper, 1 ports, clamp ends	9613161501	
		1	Valve body, upper, 2 ports, clamp ends		
		1	Valve body, upper, 1 ports, welding ends	9613139313	
		1	Valve body, upper, 2 ports, welding ends		
86		1	Valve body base, clamp	9634087702	
Valve Plug					
23		1	Plug, Cv 1.1	9634087802	
		1	Plug, Cv 1.7	9634087803	
		1	Plug, Cv 2.2	9634087804	
		1	Plug, Cv 2.9	9634087805	
		1	Plug, Cv 3.4	9634087806	
		1	Plug, Cv 7.8		9634087901
		1	Plug, Cv 15.3		9634088001

Service kits

		1” Needle	1” Std.
□	**Service kit, actuator**	**9611926500**	**9611926500**
♦	**Service kit, EPDM**	**9611926958**	**9611926961**
♦	**Service kit, HNBR**	**9611926959**	**9611926962**
♦	**Service kit, FPM**	**9611926960**	**9611926963**

Parts marked with □♦ are included in the service kits

TD 900-653/4

1.8

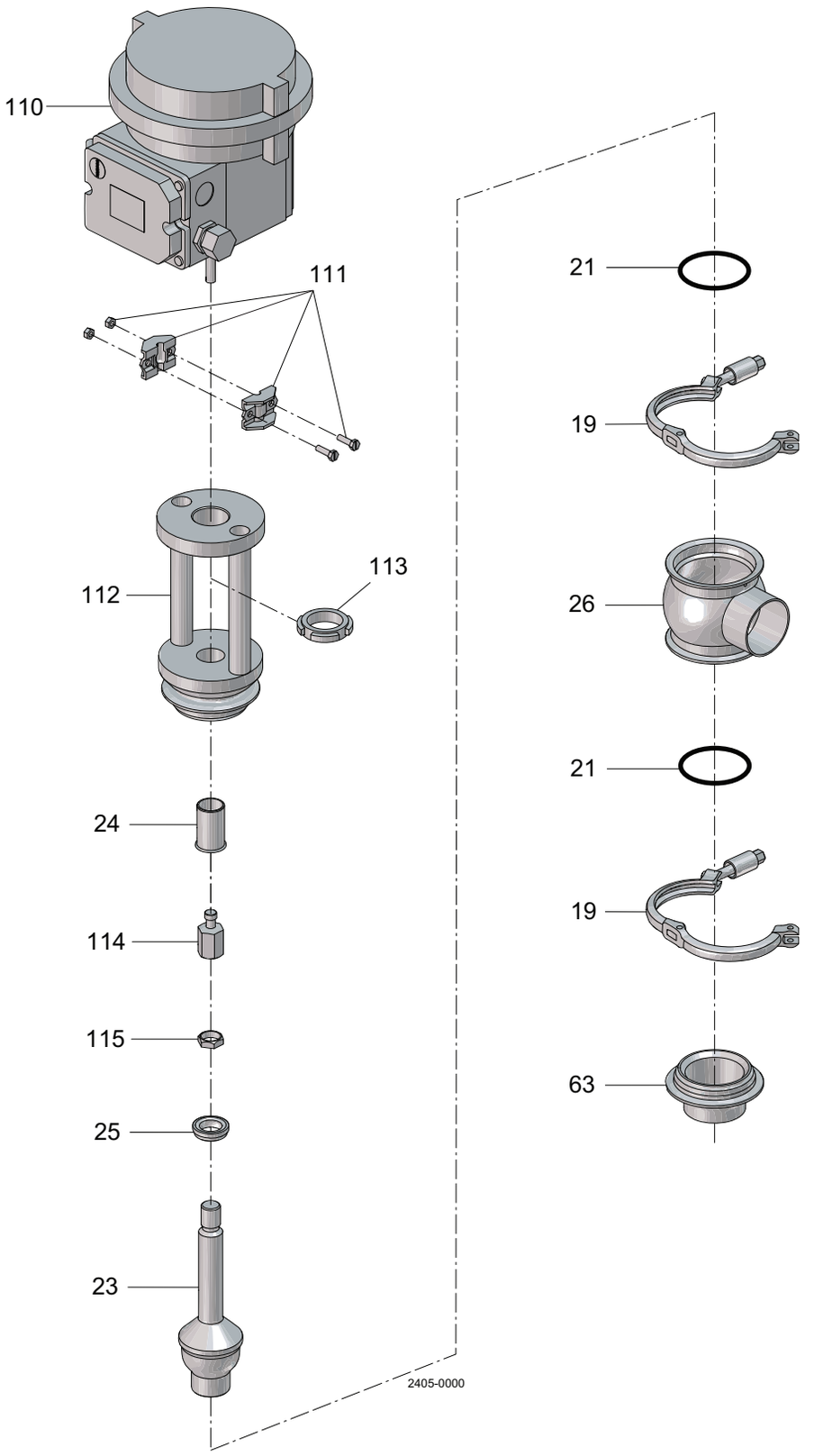

Pos		Qty	Denomination	38mm DN40	51mm DN50	63.5mm DN65	76.1mm DN80	101.6mm DN100
110		1	Actuator, complete, NO pos. Type 3725 (incl. pos 111, 113 and 114)	9615219901	9615219901	9615219901	9615219901	9615219901
		1	Actuator, complete, NC pos. Type 3725 (incl. pos 111, 113 and 114)	9615219902	9615219902	9615219902	9615219902	9615219903
		1	Actuator, complete, NO pos. Type 3730 ProfiBus (incl. pos 111, 113 and 114)	9615219904	9615219904	9615219904	9615219904	9615219904
		1	Actuator, complete, NC pos. Type 3730 ProfiBus (incl. pos. 111, 113 and 114)	9615219905	9615219905	9615219905	9615219905	9615219906
111		1	Clamp fitting	9612534201	9612534201	9612534201	9612534201	
		1	Clamp fitting, NO					9612534201
		1	Clamp fitting, NC					9612534202
112		1	Bonnet, complete, (incl. Pos 24 + 32 incl.)	9613170701	9613170702	9613170703	9613170704	9613170705
113		1	Striking nut	9612533901	9612533901	9612533901	9612533901	9612533901
24		1	Bushing	9613172101	9613172101	9613172102	9613172102	9613172102
114		1	Valve plug adjuster	9615333801	9615333801	9615333801	9615333801	
		1	Valve plug adjuster, NO					9615333801
		1	Valve plug adjuster, NC					9615333901
115		1	Nut	9613172001	9613172001	9613172001	9613172001	9613172001
25	★	1	Lip seal, EPDM (standard)					
	★	1	Lip seal, HNBR					
	★	1	Lip seal, FPM					
			Lip seal set (10 pcs.) EPDM	9614059419	9614059419	9614059419	9614059419	9614059419
			Lip seal set (10 pcs.) HNBR	9614059420	9614059420	9614059420	9614059420	9614059420
			Lip seal set (10 pcs.) FPM	9614059421	9614059421	9614059421	9614059421	9614059421
23		1	Plug, Kv 0.5 ISO	9613169801				
		1	Plug, Kv 0.5 DIN	9613169802				
		1	Plug, Kv 1 ISO	9613169901				
		1	Plug, Kv 1 DIN	9613169902				
		1	Plug, Kv 2 ISO	9613170001				
		1	Plug, Kv 2 DIN	9613170002				
		1	Plug, Kv 4 ISO	9613170101				
		1	Plug, Kv 4 DIN	9613170102				
		1	Plug, Kv 8 ISO	9613170201				
		1	Plug, Kv 8 DIN	9613170202				
		1	Plug, Kv 16 ISO	9613170301				
		1	Plug, Kv 16 DIN	9613170302				
		1	Plug, Kv 25 ISO		9615338701			
		1	Plug, Kv 25 DIN		9615338702			
		1	Plug, Kv 32 ISO		9613170401			
		1	Plug, Kv 32 DIN		9613170402			
		1	Plug, Kv 40 ISO			9615338601		
		1	Plug, Kv 40 DIN			9615338602		
		1	Plug, Kv 64 ISO			9613170501		
		1	Plug, Kv 64 DIN			9613170503		
		1	Plug, Kv 75 ISO				9613170502	
		1	Plug, Kv 75 DIN				9613170504	
		1	Plug, Kv 110 ISO					9613170601
		1	Plug, Kv 110 DIN					9613170602
21	★	2	O-ring, EPDM (standard)					
	★	2	O-ring, HNBR					
	★	2	O-ring, FPM					
			O-ring set (10 pcs.) EPDM	9614059422	9614059425	9614059428	9614059431	9614059434
			O-ring set (10 pcs.) HNBR	9614059423	9614059426	9614059429	9614059432	9614059435
			O-ring set (10 pcs.) FPM	9614059424	9614059427	9614059430	9614059433	9614059436
19		2	Clamp	9612939303	9612939304	9612939305	9612939306	9612939307
26		1	Valve body, upper, 1 port, ISO	9613139303	9613139305	9613139307	9613139309	9613139311
		1	Valve body, upper, 2 ports, ISO	9613139304	9613139306	9613139308	9613139310	9613139312
		1	Valve body, upper, 1 port, DIN	9613139403	9613139405	9613139407	9613139409	9613139411
		1	Valve body, upper, 2 ports, DIN	9613139404	9613139406	9613139408	9613139410	9613139412

1.8

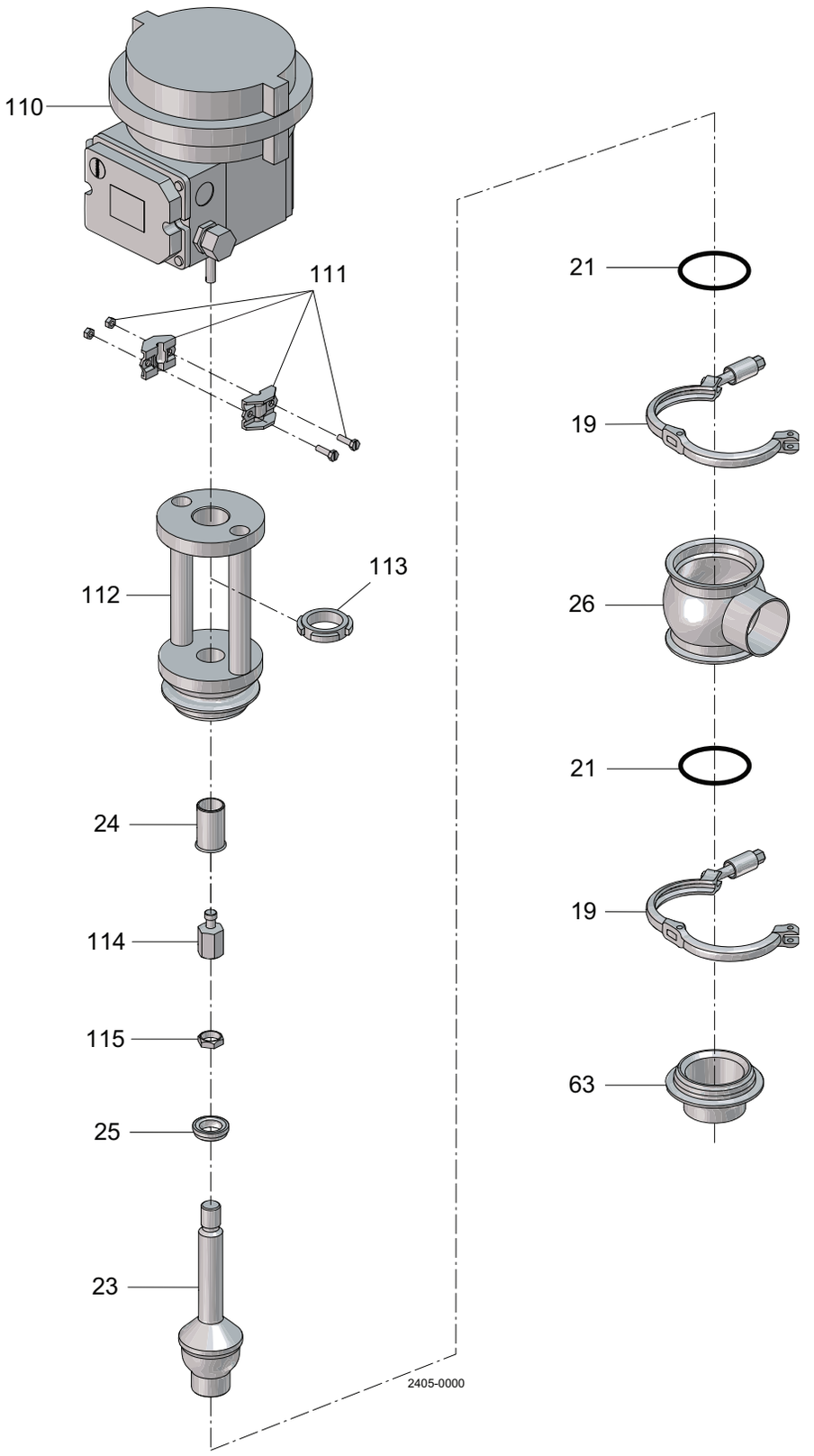

Pos	Qty	Denomination	38mm DN40	51mm DN50	63.5mm DN65	76.1mm DN80	101.6mm DN100
63	1	Seat, Kv 0.5 ISO	9613171301				
	1	Seat, Kv 0.5 DIN	9613171401				
	1	Seat, Kv 1 ISO	9613171302				
	1	Seat, Kv 1 DIN	9613171402				
	1	Seat, Kv 2 ISO	9613171303				
	1	Seat, Kv 2 DIN	9613171403				
	1	Seat, Kv 4 ISO	9613171304				
	1	Seat, Kv 4 DIN	9613171404				
	1	Seat, Kv 8 ISO	9613171305				
	1	Seat, Kv 8 DIN	9613171405				
	1	Seat, Kv 16 ISO	9613171306				
	1	Seat, Kv 16 DIN	9613171406				
	1	Seat, Kv 25 ISO		9615338901			
	1	Seat, Kv 25 DIN		9615338902			
	1	Seat, Kv 32 ISO		9613171501			
	1	Seat, Kv 32 DIN		9613171502			
	1	Kv 40 ISO			9615338801		
	1	Kv 40 DIN			9615338802		
	1	Seat, Kv 64 ISO			9613171601		
	1	Seat, Kv 64 DIN			9613171602		
	1	Seat, Kv 75 ISO				9613171701	
	1	Seat, Kv 75 DIN				9613171702	
	1	Seat, Kv 110 ISO					9613171801
	1	Seat, Kv 110 DIN					9613171802

Service Kit

		38 mm DN40	51 mm DN50	63.5 mm DN65	76.1 mm DN80	101.6 mm DN100
⋆	**Service kit, EPDM**	**9611926975**	**9611926976**	**9611926977**	**9611926978**	**9611926979**
⋆	**Service kit, HNBR**	**9611926980**	**9611926981**	**9611926982**	**9611926983**	**9611926984**
⋆	**Service kit, FPM**	**9611926985**	**9611926986**	**9611926987**	**9611926988**	**9611926989**

Parts marked with ⋆ are included in the service kits.

Recommended spare parts: Service kits.

900679/4

1.8

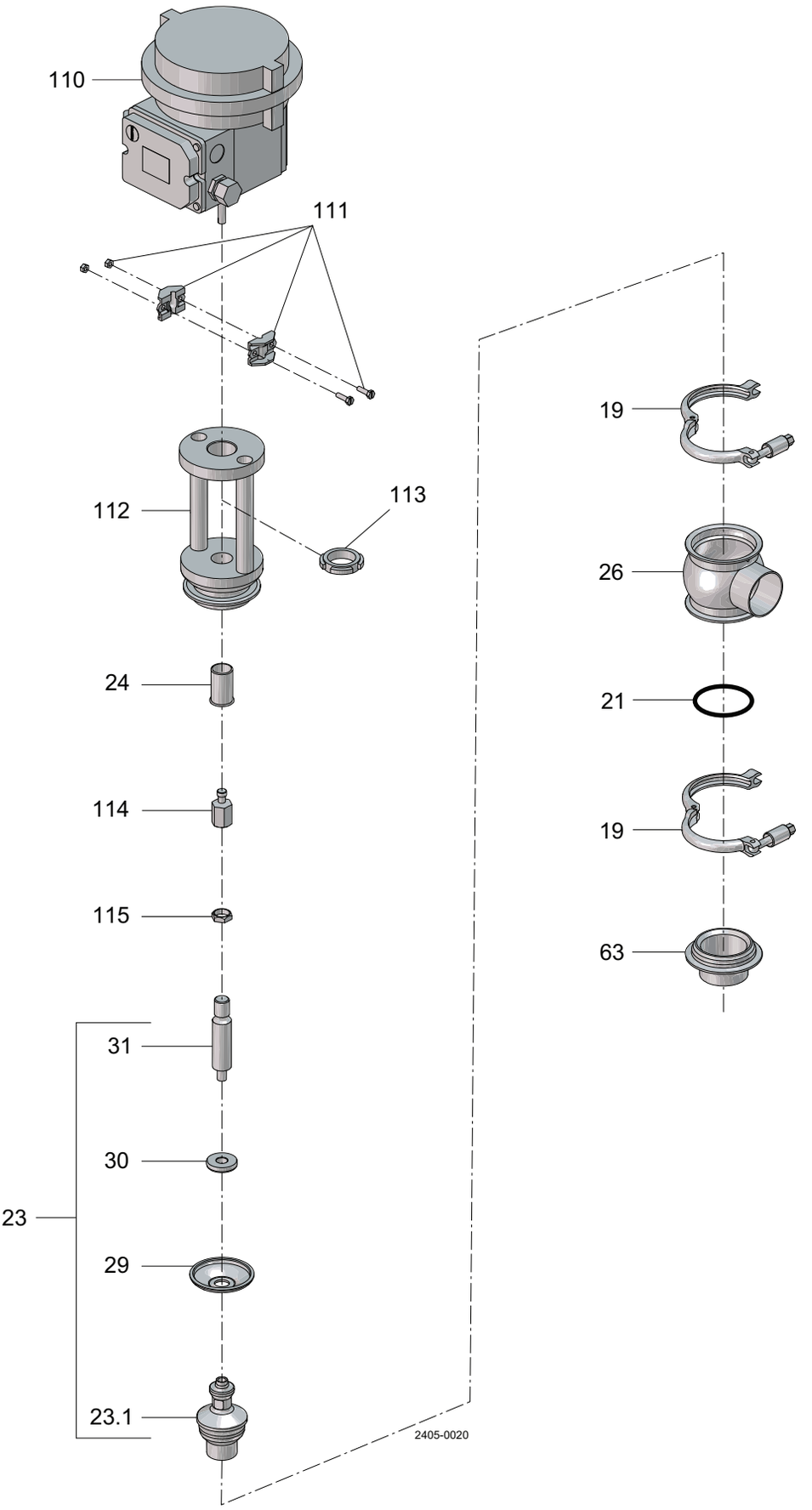

Pos		Qty	Denomination	38 mm DN40	51 mm DN50	63.5 mm DN65	76.1 DN80	101.6 mm DN100
Actuator								
110		1	Actuator, complete, NO pos. Type 3725 (incl. Pos 111, 113 and 114)	9615219901	9615219901	9615219901	9615219901	9615219901
		1	Actuator, complete, NC pos. Type 3725 (incl. Pos 111, 113 and 114)	9615219902	9615219902	9615219902	9615219902	9615219903
		1	Actuator, complete, NO pos. Type 3730 ProfiBus (incl. Pos 111, 113 and 114)	9615219904	9615219904	9615219904	9615219904	9615219904
		1	Actuator, complete, NC pos. Type 3730 ProfiBus (incl. pos. 111, 113 and 114)	9615219905	9615219905	9615219905	9615219905	9615219906
Clamp								
111		1	Clamp fitting	9612534201	9612534201	9612534201	9612534201	
		1	Clamp fitting, NO					9612534201
		1	Clamp fitting, NC					9612534202
Bonnet								
112		1	Bonnet, complete, (incl. Pos 24 + 32 incl.)	9615219501	9615219502	9615219503	9615219504	9615219505
24		1	Bushing	9613172105	9613172104	9613172103	9613172103	9613172103
32		1	Air fitting (ROW)	9611994877	9611991988	9611991988	9611991988	9611991988
		1	Air fitting (US)	9611994877	9611994682	9611994682	9611994682	9611994682
Valve plug								
114		1	Valve plug adjuster	9615333801	9615333801	9615333801	9615333801	
		1	Valve plug adjuster, NO					9615333801
		1	Valve plug adjuster, NC					9615333901
115		1	Nut	9613172001	9613172001	9613172001	9613172001	9613172001
23		1	Plug, complete, Kv 0.5 ISO	9615210001				
		1	Plug, complete, Kv 0.5 DIN	9615210002				
		1	Plug, complete, Kv 1 ISO	9615210003				
		1	Plug, complete, Kv 1 DIN	9615210004				
		1	Plug, complete, Kv 2 ISO	9615210005				
		1	Plug, complete, Kv 2 DIN	9615210006				
		1	Plug, complete, Kv 4 ISO	9615210007				
		1	Plug, complete, Kv 4 DIN	9615210008				
		1	Plug, complete, Kv 8 ISO	9615210009				
		1	Plug, complete, Kv 8 DIN	9615210010				
		1	Plug, complete, Kv 16 ISO	9615210011				
		1	Plug, complete, Kv 16 DIN	9615210012				
		1	Plug, complete, Kv 32 ISO		9615210013			
		1	Plug, complete, Kv 32 DIN		9615210014			
		1	Plug, complete, Kv 64 ISO			9615210015		
		1	Plug, complete, Kv 64 DIN			9615210016		
		1	Plug, complete, Kv 75 ISO				9615210017	
		1	Plug, complete, Kv 75 DIN				9615210018	
		1	Plug, complete, Kv 110 ISO					9615210019
		1	Plug, complete, Kv 110 DIN					9615210020
23.1		1	Plug, Kv 0.5, ISO	9615209701				
		1	Plug, Kv 0.5, DIN	9615209702				
		1	Plug, Kv 1, ISO	9615218001				
		1	Plug, Kv 1, DIN	9615218002				
		1	Plug, Kv 2, ISO	9615218101				
		1	Plug, Kv 2 DIN	9615218102				
		1	Plug, Kv 4, ISO	9615218201				
		1	Plug, Kv 4, DIN	9615218202				
		1	Plug, Kv 8, ISO	9615218301				
		1	Plug, Kv 8, DIN	9615218302				
		1	Plug, Kv 16, ISO	9615218401				
		1	Plug, Kv 16, DIN	9615218402				
		1	Plug, Kv 32, ISO		9615218501			
		1	Plug, Kv 32, DIN		9615218501			
		1	Plug, Kv 64, ISO			9615218601		
		1	Plug, Kv 64, DIN			9615218602		
		1	Plug, Kv 75, ISO				9615218701	
		1	Plug, Kv 75 DIN				9615218702	
		1	Plug, Kv 110 ISO					9615218801
		1	Plug, Kv 110 DIN					9615218802
31		1	Upper spindel	9615217801	9615209902	9615209903	9615209903	9615209903
30		1	Disc	9613144001	9613144101	9613144201	9613144301	9613144301
29	★	1	Diapragm					
			Diapragm set (10 pcs.)	9614059437	9614059438	9614059439	9614059440	9614059441
21	★	1	O-ring, EPDM (standard)					
	★	1	O-ring , HNBR					
	★	1	O-ring, FPM					
			O-ring set (10 pcs.), EPDM	9614059422	9614059425	9614059428	9614059431	9614059434
			O-ring set (10 pcs.), HNBR	9614059423	9614059426	9614059429	9614059432	9614059435
			O-ring set (10 pcs.), FPM	9614059424	9614059427	9614059430	9614059433	9614059436
Valve body								
19		2	Clamp	9612939303	9612939304	9612939305	9612939306	9612939307
26		1	Valve body, upper, 1 port, ISO	9613139303	9613139305	9613139307	9613139309	9613139311
		1	Valve body, upper, 2 ports, ISO	9613139304	9613139306	9613139308	9613139310	9613139312
		1	Valve body, upper, 1 port, DIN	9613139403	9613139405	9613139407	9613139409	9613139411

1	Valve body, upper, 2 ports, DIN	9613139404	9613139406	9613139408	9613139410	9613139412

1.8

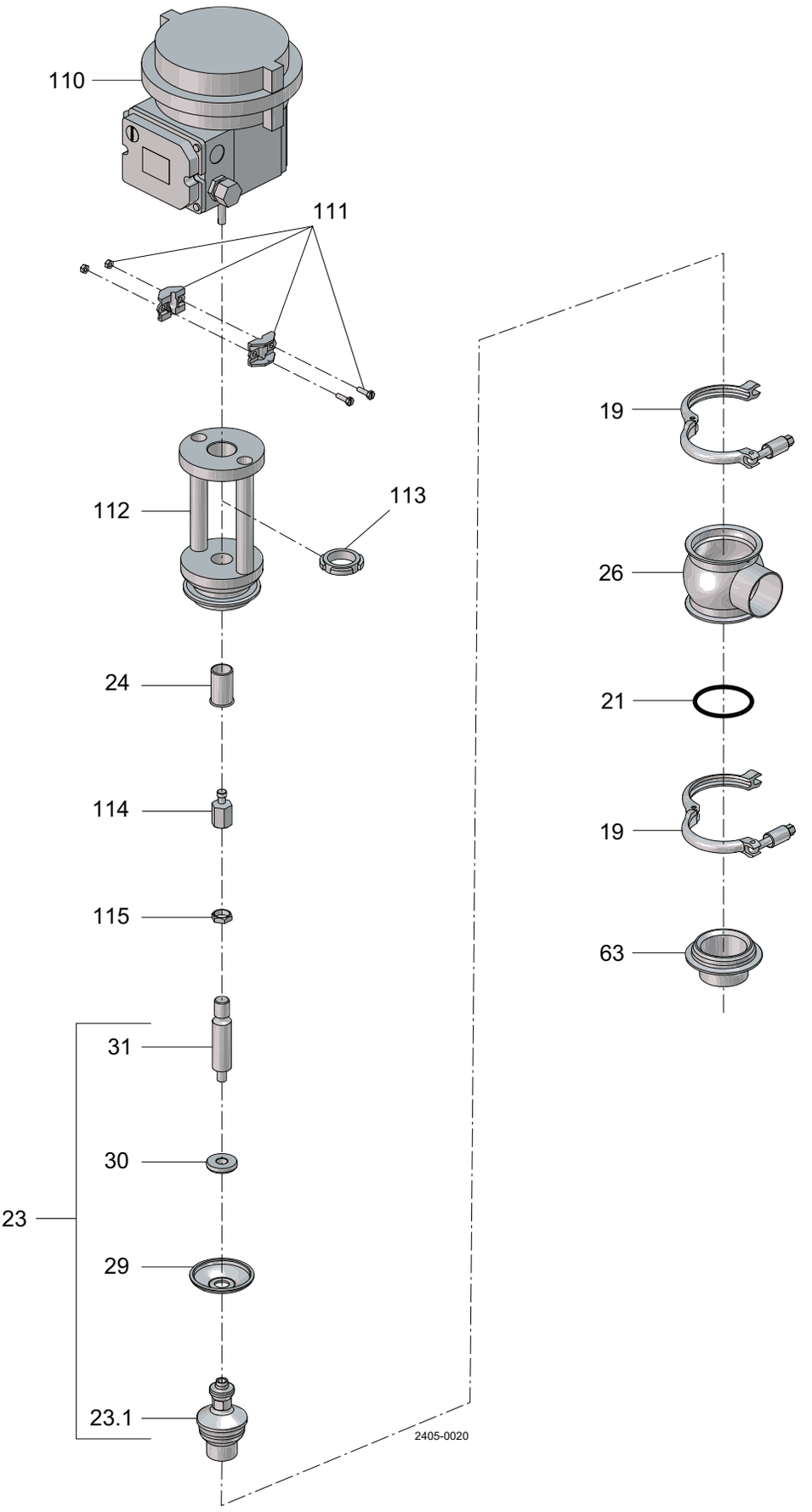

Pos	Qty	Denomination	38 mm DN40	51 mm DN50	63.5 mm DN65	76.1 mm DN80	101.6 mm DN100
63	1	Seat, Kv 0.5 ISO	9613171301				
	1	Seat, Kv 0.5 DIN	9613171401				
	1	Seat, Kv 1 ISO	9613171302				
	1	Seat, Kv 1 DIN	9613171402				
	1	Seat, Kv 2 ISO	9613171303				
	1	Seat, Kv 2 DIN	9613171403				
	1	Seat, Kv 4 ISO	9613171304				
	1	Seat, Kv 4 DIN	9613171404				
	1	Seat, Kv 8 ISO	9613171305				
	1	Seat, Kv 8 DIN	9613171405				
	1	Seat, Kv 16 ISO	9613171306				
	1	Seat, Kv 16 DIN	9613171406				
	1	Seat, Kv 32 ISO		9613171501			
	1	Seat, Kv 32 DIN		9613171502			
	1	Seat, Kv 64 ISO			9613171601		
	1	Seat, Kv 64 DIN			9613171602		
	1	Seat, Kv 75 ISO				9613171701	
	1	Seat, Kv 75 DIN				9613171702	
	1	Seat, Kv 110 ISO					9613171801
	1	Seat, Kv 110 DIN					9613171802

Service Kit

		38 mm DN40	51 mm DN50	63.5 mm DN65	76.1 mm DN80	101.6 mm DN100
⋆	Service Kit, EPDM	9611929001	9611929004	9611929007	9611929010	9611929013
⋆	Service Kit, HNBR	9611929002	9611929005	9611929008	9611929011	9611929014
⋆	Service Kit, FPM	9611929003	9611929006	9611929009	9611929012	9611929015

Parts marked with ⋆ are included in the service kits.

Recommended spare parts: Service kits.

900679/4

1.8

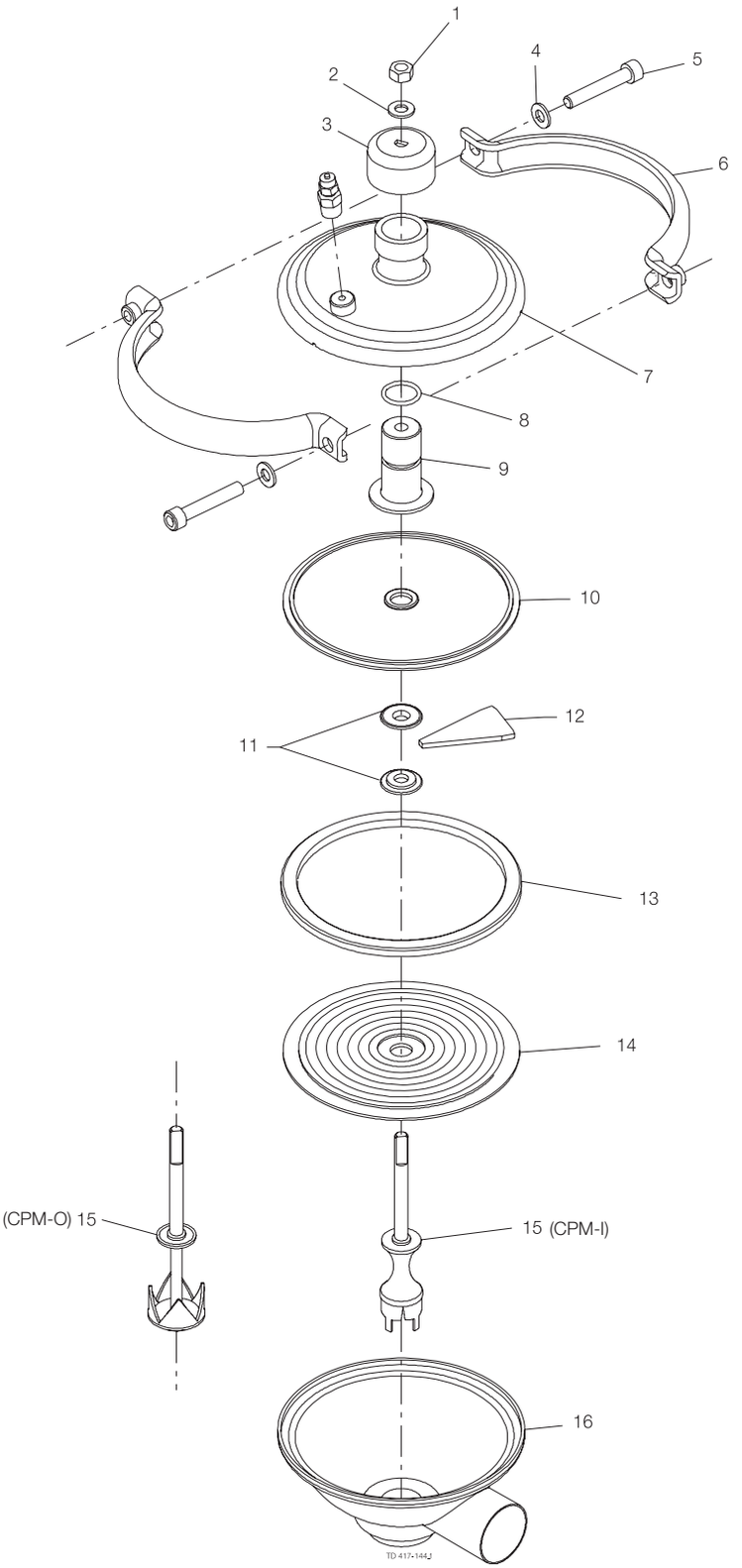

Pos		Qty	Denomination	CPMI-2-Kv23	CPMO-2-Kv23	CPMI-2-Kv2/15 Kv7	CPMO-2-Kv2/15 Kv9
1		1	Nut	22189115	22189115	22189115	22189115
2		1	Washer	9611995850	9611995850	9611995850	9611995850
3		1	Top	3135600034	3135600034	3135600034	3135600034
4		2	Washer	9611990786	9611990786	9611990786	9611990786
5		2	Screw	9611991222	9611991222	9611991222	9611991222
6		2	Clamp	9612335201	9612335201	9612335201	9612335201
7		1	Cover	3135600671	3135600671	3135600671	3135600671
8	□	1	O-ring, NBR (Standard)	22340649	22340649	22340649	22340649
		1	O-ring, FPM	9611992253	9611992253	9611992253	9611992253
9		1	Guide	3135600722	3135600722	3135600722	3135600722
10	□	1	Upper diaphragm, NBR (Standard)	3135600142	3135600142	3135600142	3135600142
		1	Upper diaphragm, EPDM/PTFE	3135600144	3135600144	3135600144	3135600144
		1	Upper diaphragm, PTFE	9612305702	9612305702	9612305702	9612305702
11		2	Inner ring	3135600631	3135600631	3135600631	3135600631
12		12	Support sector	3135600621	3135600621	3135600621	3135600621
13		1	Outer ring	9612305801	9612305801	9612305801	9612305801
14	□	1	Lower diaphragm, EPDM/PTFE (Standard)	9612306601	9612306601	9612306601	9612306601
		1	Lower diaphragm, PTFE	9612305701	9612305701	9612305701	9612305701
15		1	Valve plug Kv23	9612305901	9612306001		
		1	Valve plug Kv2/15			9612306101	9612306201
		1	Valve plug Kv7			9612468701	
		1	Valve plug Kv9				9612462501
16		1	Valve body, ISO	9612334001	9612334101	9612334201	9612334201
		1	Valve body, DIN	9612334301	9612334401	9612334501	9612334501

	CPMI-2-Kv23	CPMO-2-Kv23	CPMI-2-Kv2/15 Kv7	CPMO-2-Kv2/15 Kv9
Service kit.				
Upper NBR and lower EPDM/PTFE, NBR O-ring	**9611920218**	**9611920218**	**9611920218**	**9611920218**
Upper and lower PTFE, FPM O-ring	**9611920515**	**9611920515**	**9611920515**	**9611920515**
Upper and lower EPDM/PTFE, FPM O-ring	**9611920516**	**9611920516**	**9611920516**	**9611920516**
Upper PTFE and lower EPDM/PTFE, FPM O-ring	**9611920517**	**9611920517**	**9611920517**	**9611920517**

Parts marked with □ are included in Service kit.
Recommended spare parts: Service kit.

900-125/1

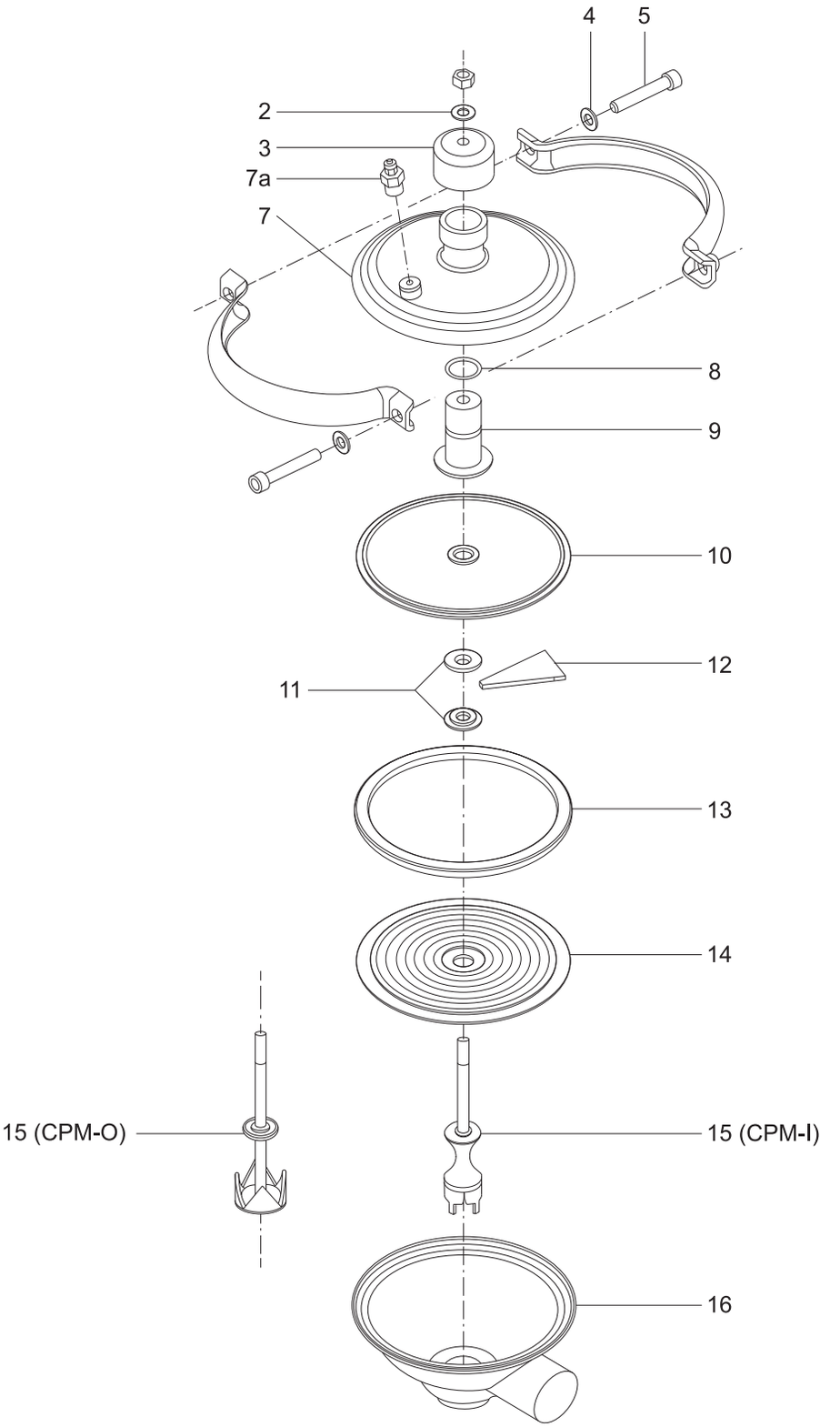
4
5
2
3
7a
7
8
9
10
11
12
13
14
15 (CPM-O)
15 (CPM-I)
16

Pos		Qty	Denomination	CPMI-2-Kv23	CPMO-2-Kv23	CPMI-2-Kv2/15	CPMO-2-Kv2/15
1		1	Nut	22189115	22189115	22189115	22189115
2		1	Washer	9611995850	9611995850	9611995850	9611995850
3		1	Top	3135600034	3135600034	3135600034	3135600034
4		2	Washer	9611990786	9611990786	9611990786	9611990786
5		2	Screw	9611991222	9611991222	9611991222	9611991222
6		2	Clamp	9612335201	9612335201	9612335201	9612335201
7		1	Cover	3135600671	3135600671	3135600671	3135600671
7a		1	Air Fitting	9634081652	9634081652	9634081652	9634081652
8	□	1	O-ring, NBR (standard)	22340649	22340649	22340649	22340649
		1	O-ring, FPM	9611992253	9611992253	9611992253	9611992253
9		1	Guide	3135600722	3135600722	3135600722	3135600722
10	□	1	Upper diaphragm, NBR (standard)	3135600142	3135600142	3135600142	3135600142
		1	Upper diaphragm, EPDM/PTFE	3135600144	3135600144	3135600144	3135600144
		1	Upper diaphragm, PTFE	9612305702	9612305702	9612305702	9612305702
11		2	Inner ring	3135600631	3135600631	3135600631	3135600631
12		12	Support sector	3135600621	3135600621	3135600621	3135600621
13		1	Outer ring	9612305801	9612305801	9612305801	9612305801
14	□	1	Lower diaphragm, EPDM/PTFE (standard)	9612306601	9612306601	9612306601	9612306601
		1	Lower diaphragm, PTFE	9612305701	9612305701	9612305701	9612305701
15		1	Valve plug, Kv23	9612305901	9612306001		
		1	Valve plug, Kv2/15			9612306101	9612306201
		1	Valve plug, Kv7			9612468701	
		1	Valve plug, Kv9				961246250
		1	Valve plugg KV31	Contact Alfa Laval	Contact Alfa Laval	Contact Alfa Laval	Contact Alfa Laval
16		1	Valve body, ISO	9612334001	9612334101	9612334201	9612334201
		1	Valve body, Weld (GC clamp body)	Contact Alfa Laval	Contact Alfa Laval	Contact Alfa Laval	Contact Alfa Laval

Parts marked with □ are included in the service kits.

		CPMI-2-Kv23	CPMO-2-Kv23	CPMI-2-Kv2/15	CPMO-2-Kv2/15
□	Service kit Upper NBR and lower EPDM/PTFE, NBR O-ring	9611920218	9611920218	9611920218	9611920218
□	Service kit Upper and lower PTFE, FPM O-ring	9611920215	9611920215	9611920215	9611920215
□	Service kit Upper and lowerEPDM/PTFE, FPM O-ring	9611920216	9611920216	9611920216	9611920216
□	Service kit UpperPTFE and lower EPDM/PTFE, FPM O-ring	9611920217	9611920217	9611920217	9611920217

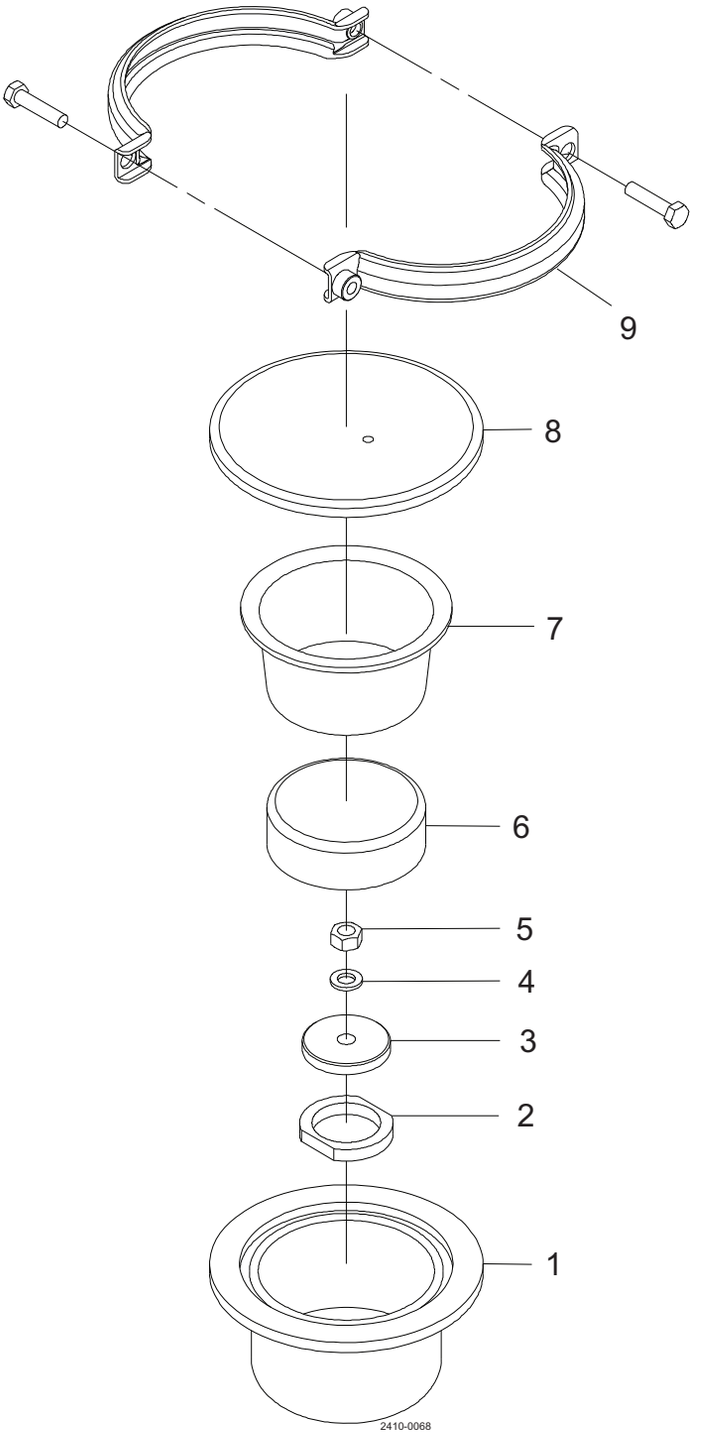
9
8
7
6
5
4
3
2
1
2410-0068

Pos	Qty	Denomination	3135600901
1	1	Booster housing	3135600891
2	1	Lock nut	3135600951
3	1	Washer	3135600841
4	1	Spring washer	9611991887
5	1	Nut	22180329
6	1	Booster piston	3135600851
7	1	Diaphragm	3135600941
8	1	Booster cover	3135600861
9	1	Clamps and screws	9611311057

Recommended spare parts: Pos. 7

900-127/0

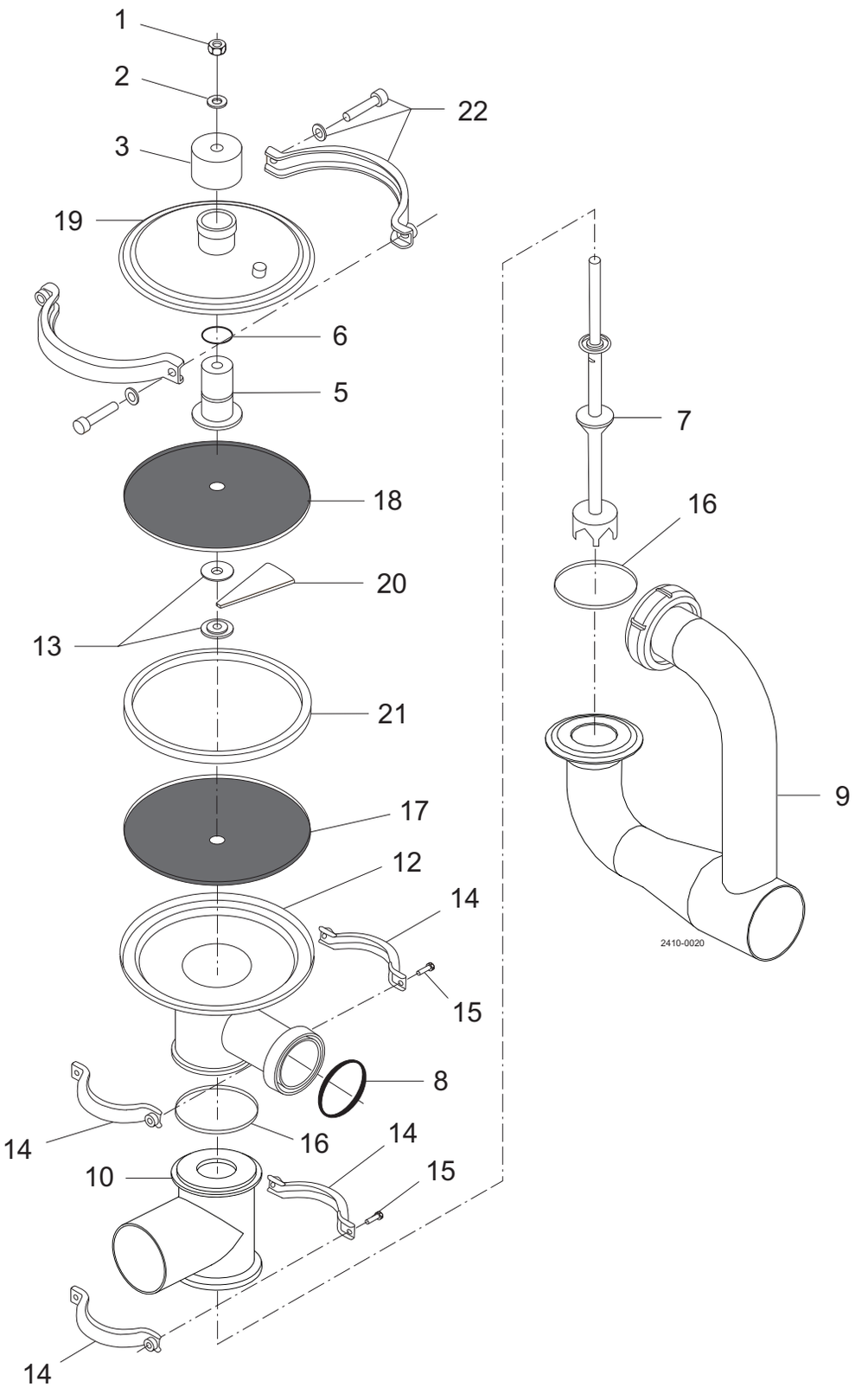
1
2
3
19
22
6
5
18
20
13
21
17
12
14
15
8
16
14
14
10
15
14
7
16
9
2410-0020

Pos		Qty	Denomination	
1		1	Nut	22189115
2		1	Washer	9611995850
3		1	Top	3135600031
5		1	Guide	3135600721
6	□	1	O-ring	22340649
7		1	Plug	3135600061
8	□	1	Seal ring, EPDM (std.)	3131703785
		1	Seal ring, NBR	190604
		1	Seal ring, FPM	3131703782
9		1	Inlet tube	3135600731
10		1	Valve body, lower	3135600181
12		1	Valve body	3135600752
13		2	Inner ring	3135600631
14+15		2	Clamps and screws (Period 9209-)	3132000273
14		4	Clamp half (Period -9209)	3132000221
15		4	Screw (Period -9209)	221093618
16	□	2	Valve body seal ring, EPDM (std.)	3135301281
		2	Valve body seal ring, NBR	3135301282
17	□	1	Diaphragm, PTFE covered EPDM (std.) (product side)	3135600144
18	□	1	Diaphragm, NBR (air side), Blue dot	3135600142
		1	Diaphragm, PTFE covered EPDM	3135600144
19		1	Cover	3135600671
20		12	Support sector	3135600621
21		1	Outer ring	3135600641
22		1	Clamp set (Period 9310-)	9611920219
		2	Clamp half , (Period 8209-9310)	3135600611
		2	Screw (Period 8209-9310)	22104106

Product wetted parts

□	**Service kit (std.)**	**9611920119**

Parts marked with □ are included in Service kit.

Recommended spare parts: Service kit.

900-126/1

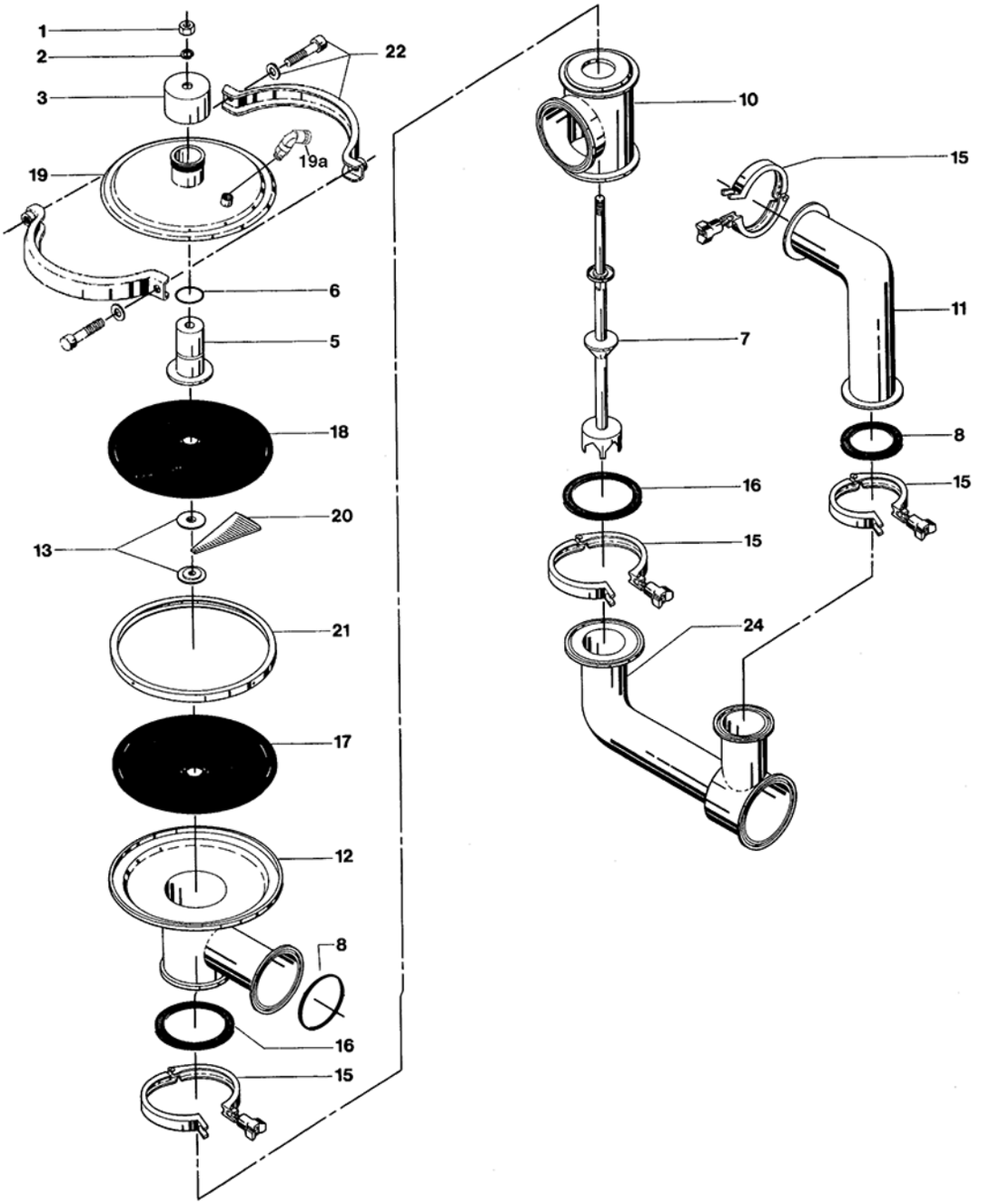
1
2
3
19
19a
22
6
5
18
20
13
21
17
12
8
16
15
10
7
15
11
8
16
15
15
24

Pos		Qty	Denomination	
1		1	Nut	22189115
2		1	Washer	9611991887
3		1	Top	3135600031
5		1	Guide	3135600721
6	□	1	O-ring	22340649
7		1	Plug	3135600062
8	□	2	Seal ring, EPDM (standard)	88121347
		2	Seal ring, EPDM (US version)	290043
		2	Seal ring, NBR	88130219
		2	Seal ring, FPM	88110130
9		1	Inlet tube	NA
10		1	Valve body lower, GC Polished	NA
11		2	Inner ring	3135600631
12		1	Valve body, GC Polished	NA
14		1	Heavy duty clamp	9612011202
15		3	Heavy duty clamp	9612011204
16	□	2	Valve body seal ring, EPDM (standard)	3135301281
		2	Valve body seal ring, NBR	3135301282
17	□	1	Diaphragm, PTFE covered EPDM (standard) (product side)	3135600144
18	□	1	Diaphragm, NBR (air side), blue dot	3135600142
		1	Diaphragm, PTFE covered EPDM	3135600144
19		1	Cover	3135600671
19a		1	Air fitting	88139750
20		12	Support sector	3135600621
21		1	Outer ring	3135600641
22		1	Clamp set (period 9310-)	9611920219

□	**Service kit for US CPM-1-60**	**9636000179**
	Air regulating kit	**884398560**

1.8

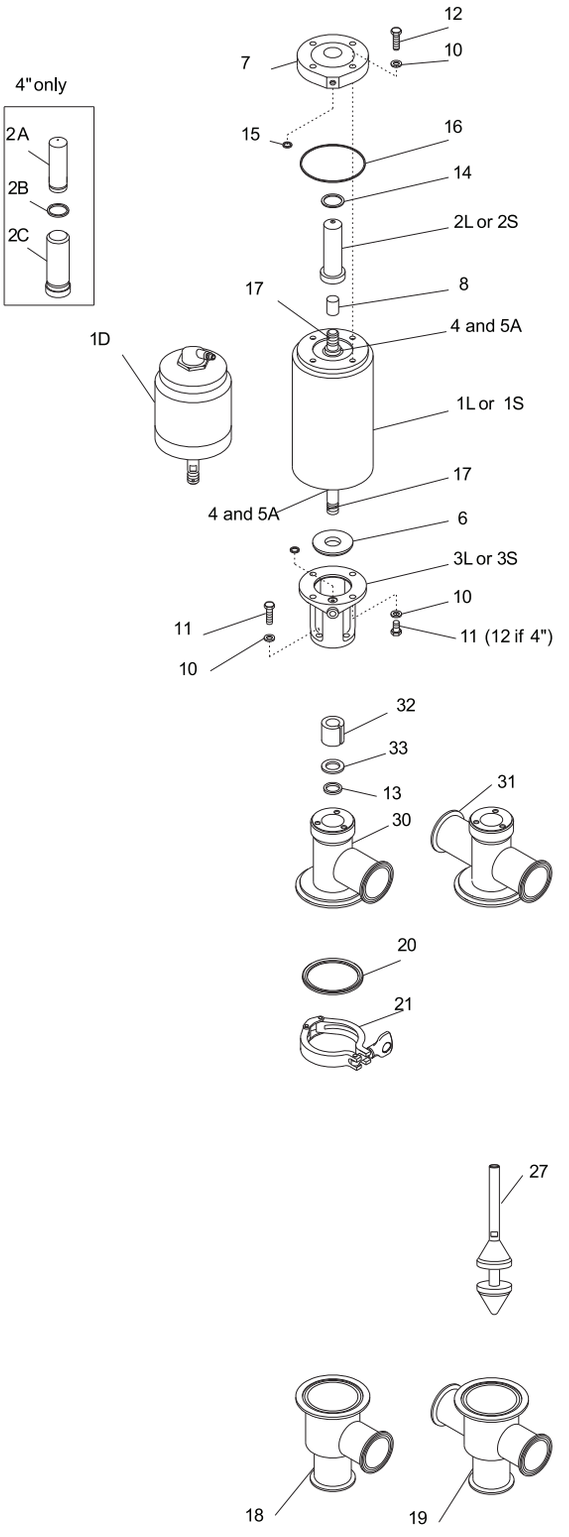
12
10
7
4" only
2A
2B
2C
15
16
14
2L or 2S
17
8
4 and 5A
1D
1L or 1S
17
4 and 5A
6
3L or 3S
10
11
11 (12 if 4")
10
32
33
13
31
30
20
21
27
18
19

Pos		Qty	Denomination	1 1/2”	2”	2 1/2”	3”	4”
1D		1	Diaphragm actuator	750397	750397	750397	750397	
1S		1	10/20 actuator, short	750318	750318	750318	750318	N/A
2S		1	Stem protector,short	750583	750583	750583	750583	N/A
3S		1	Yoke, short	750224	750224	750224	750224	N/A
4		2	Seal retainer	751680	751680	751680	751680	751680
5	□	2	Vee packing	755461	755461	755461	755461	755461
5A		2	O-ring to replace v-packing	751232	751232	751232	751232	751232
6	□	1	Packing retainer	751659	751659	751659	751659	751659
7		1	End cap	751682	751682	751682	751682	751010
8		1	Red caplug	750568	750568	750568	750568	750568
9		11	Vent plug (not shown)	181256	181256	181256	181256	181256
10		7	Lockwasher	189962	189962	189962	189962	189962
11		4	Screw	189773	189773	189773	189773	189798
12		1	Screw	189723	189723	189723	189723	189723
13	□	1	O-ring stem BUNA	755370	755370	755370	755370	755452
	□	1	O-ring stem EPDM	750132	750132	750132	750132	751956
	□	1	O-ring stem SFY	750077	750077	750077	750077	751957
14		2	O-ring	755356	755356	755356	755356	755356
15	□	1	O-ring	755388	755388	755388	755388	755388
16		1	O-ring	755472	755472	755472	755472	755472
17	□	1	Nylon lock pin	750338	750338	750338	750338	750338
18		1	Body lower 2 ports clamp	770106	770107	770111	770116	770300
		2	Body lower 2 ports weld	771004	770824	770784	770833	772221
19		1	Body lower 3 ports clamp	770269	770273	770275	770279	770965
		1	Body lower 3 ports weld	771059	770464	770815	770814	772672
20	□	1	Body gasket BUNA	750376	750376	750385	750391	755421
	□	1	Body gasket EPDM	750383	750383	750390	750400	751799
	□	1	Body gasket SFY	750382	750382	750389	750398	750209
21		1	Clamp	270266	270266	270267	212211	212209
27		1	Valve plug	770455	771587	771293	771576	
30		1	Body upper 2 ports clamp	770119	770120	770121	770122	771510
		1	Body upper 2 ports weld	771156	770827	770115	771155	771513
31		1	Body upper 3 ports clamp	770304	770307	770308	770309	771715
		1	Body upper 3 ports weld	770869	771296	771651	771184	771818
32	□	1	Stem bushing	763362	763362	763362	763362	762528
33		1	Seal retaining washer	750361	750361	750361	750361	750361

			1 1/2”	2”	2 1/2”	3”	4”
□		Service Kit Buna	9613990327	9613990327	9613990508	9613990330	9613990333
□		Service Kit EPDM	9613990328	9613990328	9613990509	9613990331	9613990334
□		Service Kit SFY	9613990329	9613990329	9613990510	9613990332	9613990335

1.8

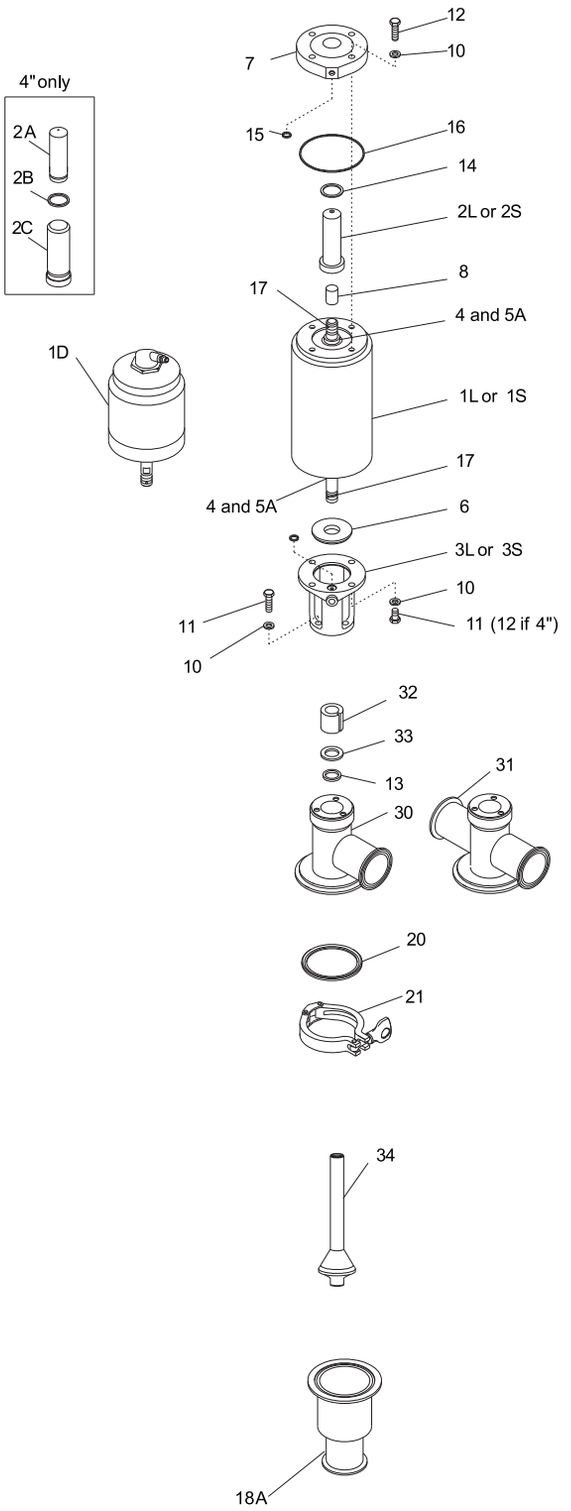
4"only
2A
2B
2C
12
10
7
15
16
14
2L or 2S
8
17
4 and 5A
1D
1L or 1S
17
4 and 5A
6
3L or 3S
10
11
11 (12 if 4")
10
32
33
13
31
30
20
21
34
18A

Pos		Qty	Denomination	1 1/2”	2”	2 1/2”	3”	4”
1D		1	Diaphragm actuator	750397	750397	750397	750397	
1S		1	10/20 actuator, shor	750318	750318	750318	750318	N/A
2S		1	Stem protector,short	750583	750583	750583	750583	N/A
3S		1	Yoke,short	750224	750224	750224	750224	N/A
4		2	Seal retainer	751680	751680	751680	751680	751680
5	□	2	Vee packing	755461	755461	755461	755461	755461
5A		2	O-ring to replace v-packing	751232	751232	751232	751232	751232
6	□	1	Packing retainer	751659	751659	751659	751659	751659
7		1	End cap	751682	751682	751682	751682	751010
8		1	Red caplug	750568	750568	750568	750568	750568
9		1	Vent plug (not shown)	181256	181256	181256	181256	181256
10		11	Lockwasher	189962	189962	189962	189962	189962
11		7	Screw	189773	189773	189773	189773	189798
12		4	Screw	189723	189723	189723	189723	189723
13	□	1	O-ring stem BUNA	755370	755370	755370	755370	755452
	□	1	O-ring stem EPDM	750132	750132	750132	750132	751956
	□	1	O-ring stem SFY	750077	750077	750077	750077	751957
14		1	O-ring	755356	755356	755356	755356	755356
15	□	2	O-ring	755388	755388	755388	755388	755388
16		1	O-ring	755472	755472	755472	755472	755472
17	□	1	Nylon lock pin	750338	750338	750338	750338	750338
18A		1	Body lower 2 ports clamp	770428	770056	701110	700013	-----
		1	Body lower 2 ports weld		771297	318491	771611	
20	□	1	Body gasket BUNA	750376	750376	750385	750391	755421
	□	1	Body gasket EPDM	750383	750383	750390	750400	751799
	□	1	Body gasket SFY	750382	750382	750389	750398	750209
21		1	Clamp	270266	270266	270267	212211	212209
30		1	Body upper 2 ports clamp	770119	770120	770121	770122	771510
		1	Body upper 2 ports weld	771156	770827	770115	771155	771513
31		1	Body upper 3 ports clamp	770304	770307	770308	770309	771715
		1	Body upper 3 ports weld	770869	771296	771651	771184	771818
32	□	1	Stem bushing	763362	763362	763362	763362	762528
33		1	Seal retaining washer	750361	750361	750361	750361	751960
34		1	Valve plug	771154	771154	772403	770992	

		1 1/2”	2”	2 1/2”	3”	4”
□	Service Kit Buna	9613990327	9613990327	9613990508	9613990330	9613990333
□	Service Kit EPDM	9613990328	9613990328	9613990509	9613990331	9613990334
□	Service Kit SFY	9613990329	9613990329	9613990510	9613990332	9613990335

1.8

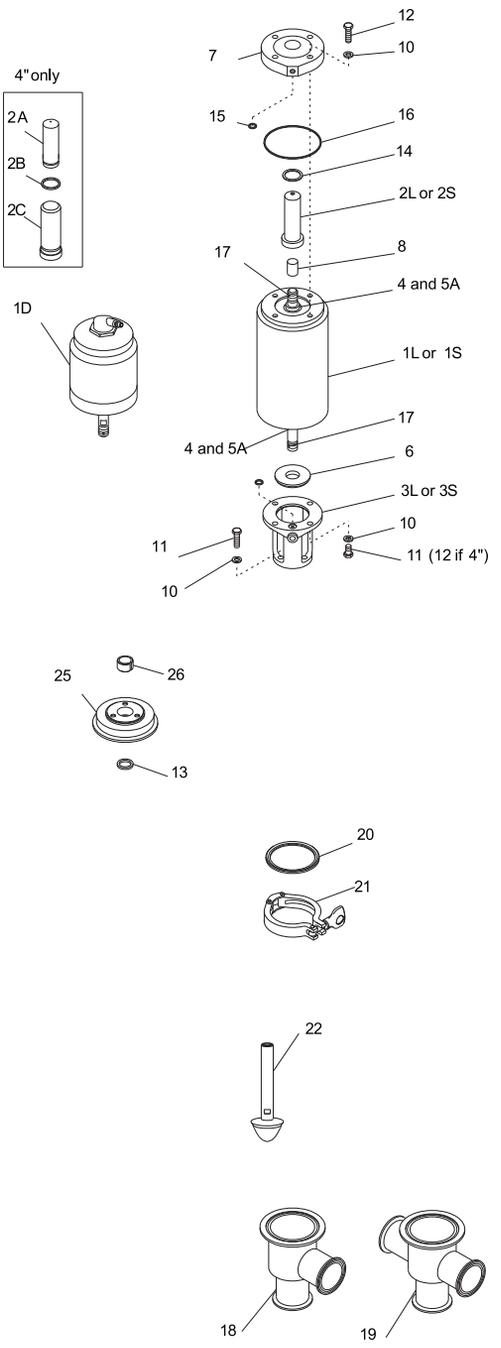
12
10
7
4"only
2A
2B
2C
15
16
14
2L or 2S
17
8
4 and 5A
1D
1L or 1S
17
4 and 5A
6
3L or 3S
10
11
11 (12 if 4")
10
25
26
13
20
21
22
18
19

Pos		Qty	Denomination	1”	1 1/2”	2”	2 1/2”	3”	4”
1D		1	Diaphragm actuator 15 . . .	750197	750397	750397	750397	750397	
1S		1	Actuator 10/20	750887	750318	750318	750318	750318	N/A
		1	Actuator 14d	751824	751607	751607	751607	751607	
2S		1	Stem protector,short	750583	750583	750583	750583	750583	N/A
3S		1	Yoke,short	750224	750224	750224	750224	750224	N/A
4		2	Seal retainer	751680	751680	751680	751680	751680	751680
5	□	2	Vee packing	755461	755461	755461	755461	755461	755461
5A		2	O-ring to replace v-packing	751232	751232	751232	751232	751232	751232
6	□	1	Packing retainer	751659	751659	751659	751659	751659	751659
7		1	End cap	751682	751682	751682	751682	751682	751010
8		1	Red caplug	750568	750568	750568	750568	750568	750568
9		1	Vent plug (not shown)	181256	181256	181256	181256	181256	181256
10		11	Lockwasher	189962	189962	189962	189962	189962	189962
11		7	Screw	189773	189773	189773	189773	189773	189798
12		4	Screw	189723	189723	189723	189723	189723	189723
13	□	1	O-ring stem BUNA	755357	755370	755370	755370	755370	755452
	□	1	O-ring stem EPDM	750037	750132	750132	750132	750132	751956
	□	1	O-ring stem SFY	750173	750077	750077	750077	750077	751957
14		1	O-ring	755356	755356	755356	755356	755356	755356
15	□	2	O-ring	755388	755388	755388	755388	755388	755388
16		1	O-ring	755472	755472	755472	755472	755472	755472
17	□	1	Nylon lock pi	750292	750338	750338	750338	750338	750338
18		1	Body lower 2 ports clamp .	771196	770106	770107	770111	770116	770300
		1	Body lower 2 ports weld . .	772330	771004	770824	770784	770833	772221
19		2	Body lower 3 ports clamp .	778354	770269	770273	770275	770279	770965
		1	Body lower 3 ports weld . .	772330	771059	770464	770815	770814	772672
20	□	1	Body gasket BUNA	290285	750376	750376	750385	750391	755421
	□	1	Body gasket EPDM	290105	750383	750383	750390	750400	751799
	□	1	Body gasket SFY	290023	750382	750382	750389	750398	750209
21		1	Clamp	212196	270266	270266	270267	212211	212209
22S		1	Stem assembly 10/20/24p	771076	770228	770310	771250	771490	772592
		1	Stem assembly 15/14d . . .	770091	770276	770048	7700027	770097	
		1	Stem assembly 14p	771267	770228	770310	771250	771490	
		1	Special Taper	Contact Alfa Laval	Contact Alfa Laval	Contact Alfa Laval	Contact Alfa Laval	Contact Alfa Laval	Contact Alfa Laval
25		1	Bonnet	750186	750514	750514	751686	751687	751899
26	□	1	Stem bushing	760277	763361	763361	763361	763361	762507
		1	Positioner & adapter 14p . .	760656	760031	760031	760031	760031	
		1	Positioner & adapter 24p . .	761789	760032	760032	760032	760032	

Parts marked with □ are included in the service kits.

Recommended spare parts: Service kits.

		1”	1 1/2”	2”	2 1/2”	3”	4”
□	**Service Kit Buna . . . . . .**	**9613990336**	**9613990339**	**9613990342**	**9613990345**	**9613990348**	**9613990351**
□	**Service Kit EPDM . . . . . .**	**9613990337**	**9613990340**	**9613990343**	**9613990346**	**9613990349**	**9613990352**
□	**Service Kit SFY . . . . . .**	**9613990338**	**9613990341**	**9613990344**	**9613990347**	**9613990350**	**9613990353**

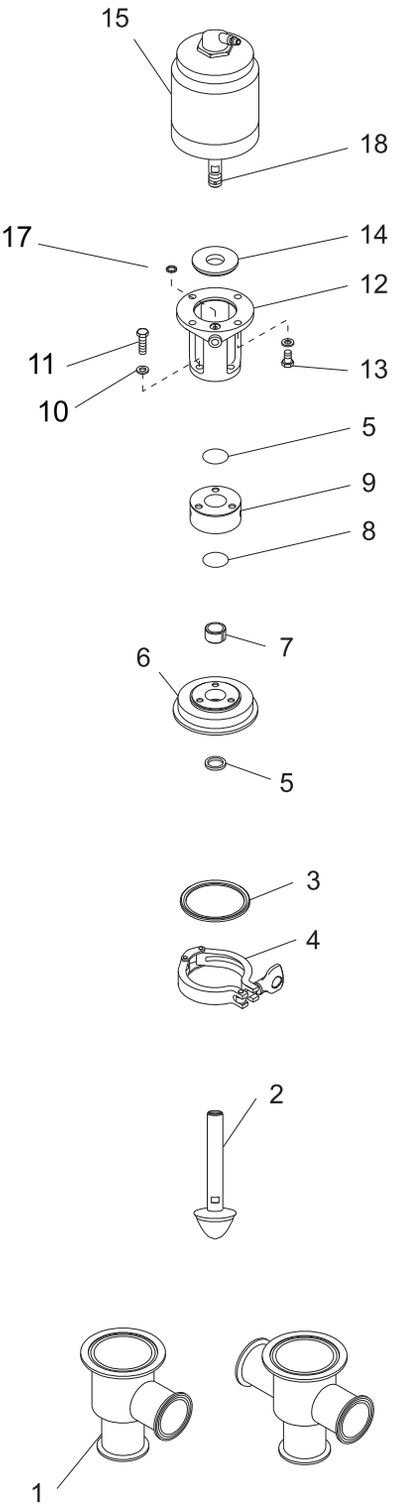
15
18
17
14
12
11
13
10
5
9
8
7
6
5
3
4
2
1

Pos		Qty	Denomination	1 1/2”	2”	2 1/2”	3”
1		1	Body, 10 tee type	770106	770107	770111	770116
		1	Body, 30 cross type	770269	770273	770275	770279
2		1	Stem-Throttling (871)	770752	772755	772555	772754
3	□	1	Body Gasket, SFY	750382	750382	750389	750398
	♦	1	Body Gasket, EPDM	EPDM	750383	750390	750400
4		1	Clamp	270266	270266	270267	212211
5	□	2	Stem O ring, SFY	750077	750077	750077	750077
	♦	2	Stem O ring, EPDM	750132	750132	750132	750132
6		1	Bonnet	750514	750514	751686	751687
7	□♦	1	Roulon Stem Bushing	761578	761578	761578	761578
8	□	1	O ring, SFY	751496	751496	751496	751496
	♦	1	O ring, EPDM	9634048098	9634048098	9634048098	9634048098
9		1	Spacer	751488	751488	751488	751488
10		7	Lockwasher	189962	189962	189962	189962
11		3	Screw	180472	180472	180472	180472
12		1	Yoke	750224	750224	750224	750224
13		4	Screw	189773	189773	189773	189773
14		1	Packing Retainer	751659	751659	751659	751659
15		1	Actuator	750397	750397	750397	750397
16		1	Vent Plug	181256	181256	181256	181256
17	□♦	1	O ring	755388	755388	755388	755388
18		1	Nylon Lock Pin	750338	750338	750338	750338

Parts marked with □♦ are included in the service kits.

		1 1/2”	2”	2 1/2”	3”
□	SFY Service Kit	9613990659	9613990659	9613990660	9613990661
♦	EPDM Service Kit	9613990656	9613990656	9613990657	9613990658

1.8

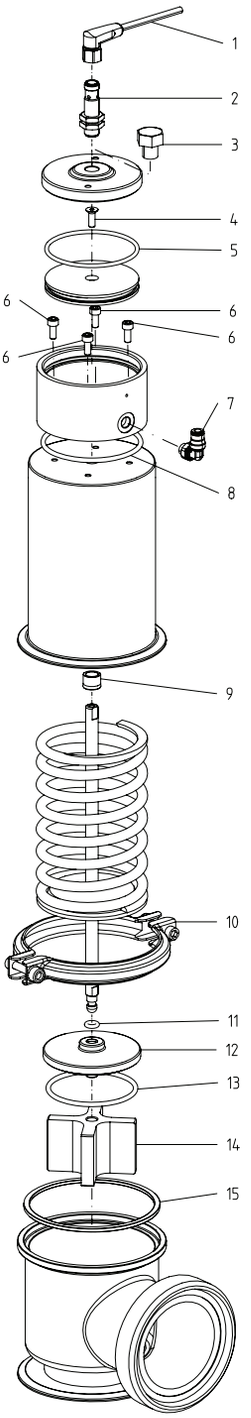

Pos		Qty	Denomination	51mm	76,1mm
1		1	Sensor cable 5m	9611995205	9611995205
2		1	Sensor	9611995744	9611995744
3		1	Plug	9615074401	9615074401
4		1	Screw	9611995730	9611995730
5	♦	1	O-ring, NBR		
6		4	Screw	9611991930	9611991930
7		1	Air fitting	9611991988	9611991988
8	♦	1	O-ring, NBR		
9	□	1	Variseal		
10		1	Clamp ring	3132000273	3132000272
11	□	1	O-ring, EPDM		
12		1	Disc top	9615136901	9615128301
13	□	1	O-ring, EPDM		
14		1	Disc tail	9615128402	9615128401
15	□	1	Seal ring, EPDM		

		51mm	76,1mm
Service Kits for CO2 House, 51 - 76,1mm			
□	CO2 House service kit	9615151101	9615151102
♦	Force opener service kit	9615151201	9615151201

Parts marked with □♦ are included in the service kits.

1.8

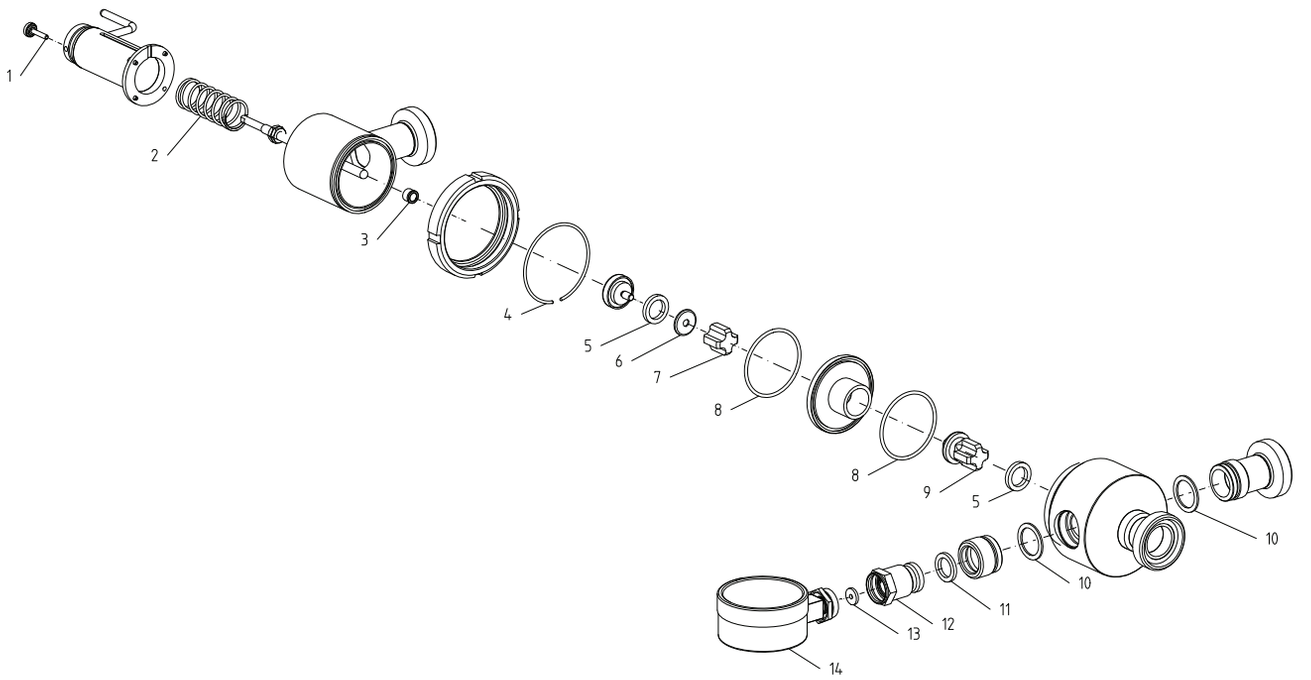

Pos		Qty	Denomination	25mm	38mm
1		1	Thumb screw	9615144401	9615144402
2		1	Pressure Spring, 0-1 bar	9615106601	9615107401
		1	Pressure Spring, 0-2 bar	9615106602	9615107402
		1	Pressure Spring, 0-3 bar	9615106603	9615107403
		2	Pressure Spring, 0-4 bar	9615106604	9615107404
3	□♦	1	Variseal		
4		1	Locking ring	9615097501	9615099801
5	□	2	Gasket, Q		
	♦	2	Gasket, EPDM		
6		1	Washer for gasket	9615096501	9615103201
7		1	Guide fin	9615096601	9615103301
8	□♦	2	O-ring, EPDM		
9		1	Pressure body	9615098601	9615100801
10	□♦	2	Gasket, PTFE		
11	□♦	1	Gasket, EPDM		
12		1	Safety valve for pressure gauge, 1.6 bar		
		1	Safety valve for pressure gauge, 2.5 bar		
		1	Safety valve for pressure gauge, 4 bar		
		1	Safety valve for pressure gauge, 6 bar		
13	□♦	1	Gasket, PUR		
14		1	Pressure gauge, 1.6 bar, inlet 3 o'clock	9615142201	9615142201
		1	Pressure gauge, 2.5 bar, inlet 3 o'clock	9615142202	9615142202
		1	Pressure gauge, 4.0 bar, inlet 3 o'clock	9615142203	9615142203
		1	Pressure gauge, 6.0 bar, inlet 3 o'clock	9615142204	9615142204
		1	Pressure gauge, 1.6 bar, inlet 9 o'clock	9615142205	9615142205
		1	Pressure gauge, 2.5 bar, inlet 9 o'clock	9615142206	9615142206
		1	Pressure gauge, 4.0 bar, inlet 9 o'clock	9615142207	9615142207
		1	Pressure gauge, 6.0 bar, inlet 9 o'clock	9615142208	9615142208
		1	Pressure gauge, 1.6 bar, inlet 12 o'clock	9615142209	9615142209
		1	Pressure gauge, 2.5 bar, inlet 12 o'clock	9615142210	9615142210
		1	Pressure gauge, 4.0 bar, inlet 12 o'clock	9615142211	9615142211
		1	Pressure gauge, 6.0 bar, inlet 12 o'clock	9615142212	9615142212

		25mm	38mm
Service kits for 25mm - 38mm			
♦	**Service kit, EPDM Pressure > 1.0 bar**	**9611924322**	**9611924324**
□	**Service kit, Q Pressure ≤ 1.0 bar**	**9611924321**	**9611924323**

Parts marked with □♦ are included in the service kits.

1.8

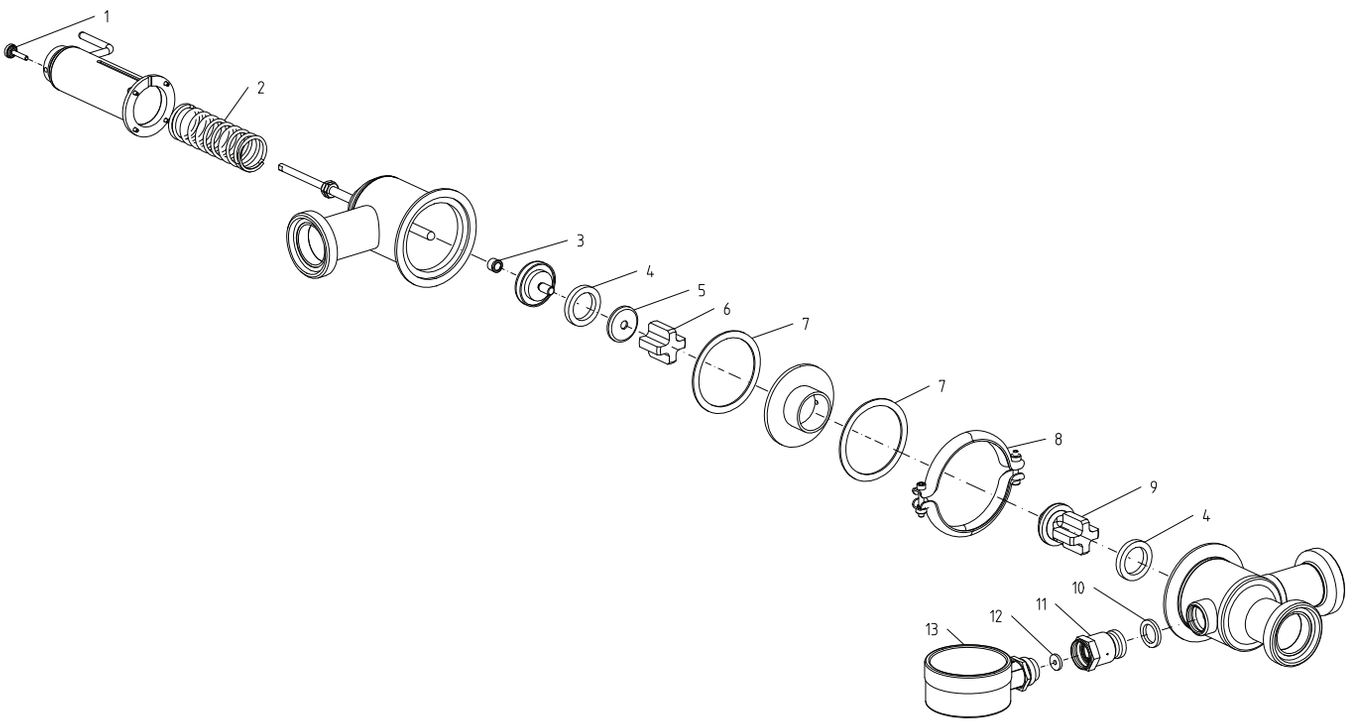

Pos		Qty	Denomination	51mm	76,1mm
1		1	Thumb screw	9615144402	9615144402
2		1	Pressure Spring, 0-1 bar	9615108201	9615111601
		1	Pressure Spring, 0-2 bar	9615108202	9615111602
		1	Pressure Spring, 0-3 bar	9615108203	9615111603
		1	Pressure Spring, 0-4 bar	9615108204	9615111604
3	□♦	1	Variseal		
4	□	2	Gasket, Q		
	♦	2	Gasket, EPDM		
5		1	Washer for gasket	9615106101	9615112101
6		1	Guide fin	9615106201	9615112201
7	□♦	2	Gasket, NBR		
8		1	Clamp ring	9611311055	9611311056
9		1	Pressure body	9615106001	9615112001
10	□♦	1	Gasket, EPDM, EPDM		
11		1	Safety valve for pressure gauge, 1.6 bar	9615096001	9615096001
		1	Safety valve for pressure gauge, 2.5 bar	9615096002	9615096002
		1	Safety valve for pressure gauge, 4 bar	9615096003	9615096003
		1	Safety valve for pressure gauge, 6 bar	9615096004	9615096004
12	□♦	1	Gasket, PUR		
13		1	Pressure gauge, 1.6 bar, inlet 3 o'clock	9615142201	9615142201
		1	Pressure gauge, 2.5 bar, inlet 3 o'clock	9615142202	9615142202
		1	Pressure gauge, 4.0 bar, inlet 3 o'clock	9615142203	9615142203
		1	Pressure gauge, 6.0 bar, inlet 3 o'clock	9615142204	9615142204
		1	Pressure gauge, 1.6 bar, inlet 9 o'clock	9615142205	9615142205
		1	Pressure gauge, 2.5 bar, inlet 9 o'clock	9615142206	9615142206
		1	Pressure gauge , 4.0 bar, inlet 9 o'clock	9615142207	9615142207
		1	Pressure gauge, 6.0 bar, inlet 9 o'clock	9615142208	9615142208
		1	Pressure gauge, 1.6 bar, inlet 12 o'clock	9615142209	9615142209
		1	Pressure gauge, 2.5 bar, inlet 12 o'clock	9615142210	9615142210
		1	Pressure gauge, 4.0 bar, inlet 12 o'clock	9615142211	9615142211
		1	Pressure gauge, 6.0 bar, inlet 12 o'clock	9615142212	9615142212

		51mm	76,1mm
Service kits for 51mm - 76,1mm			
♦	**Service kit, EPDM Pressure > 1.0 bar**	**9611924326**	**9611924328**
□	**Service kit, Q Pressure ≤ 1.0 bar**	**9611924325**	**9611924327**

Parts marked with □♦ are included in the service kits.

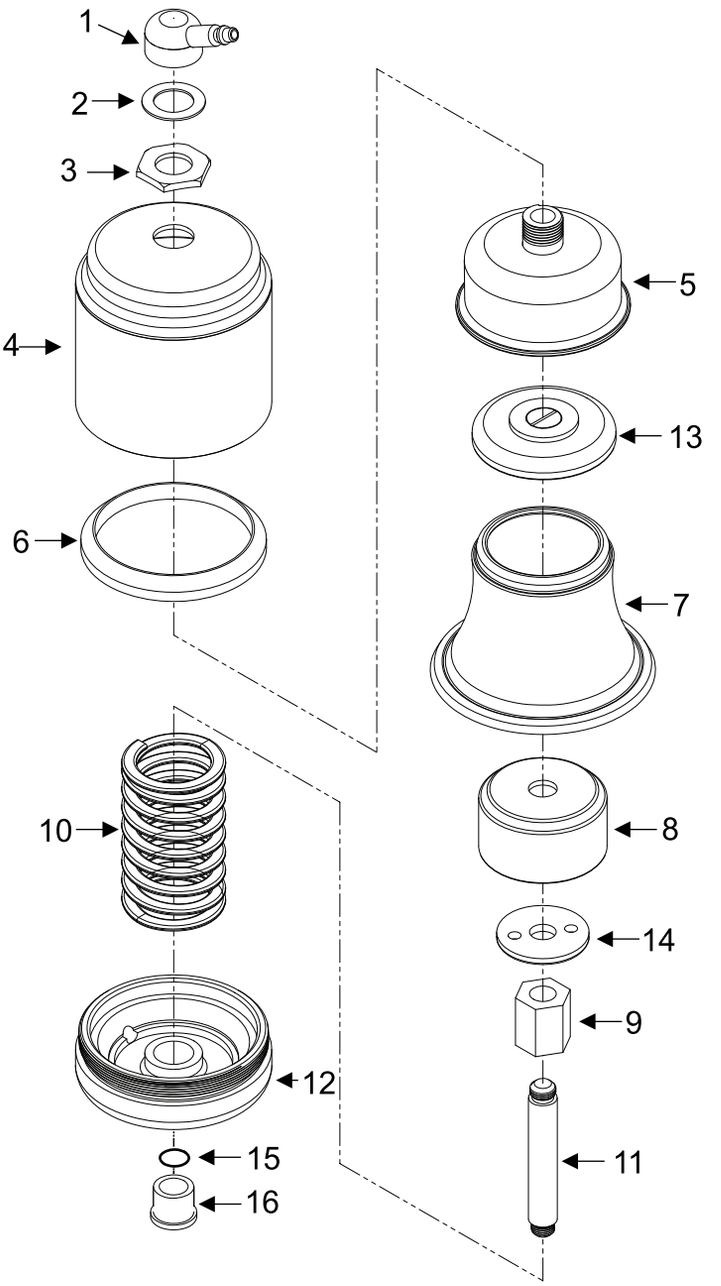
1
2
3
4
5
6
7
8
9
10
11
12
13
14
15
16

Pos		Qty	Denomination	
1		1	Coupler	764249
2	□	1	Gasket	755451
3		1	Sealing nut	754328
4		1	Cylinder	750032
5		1	Outer diaphragm clamp	763805
6		1	Body insert	764088
7	□	1	Diaphragm	763501
8		1	Inner diaphragm clamp	763753
9		1	Adapter	764089
10		1	Spring	750752
11		1	Stem	770737
12		1	Bonnet	751044
13		1	Diaphragm guide	763765
14		1	Nut	754265
15	□	1	Packing	755461
16	□	1	Seal retainer	751680

□	**Service Kit**	**9613990170**

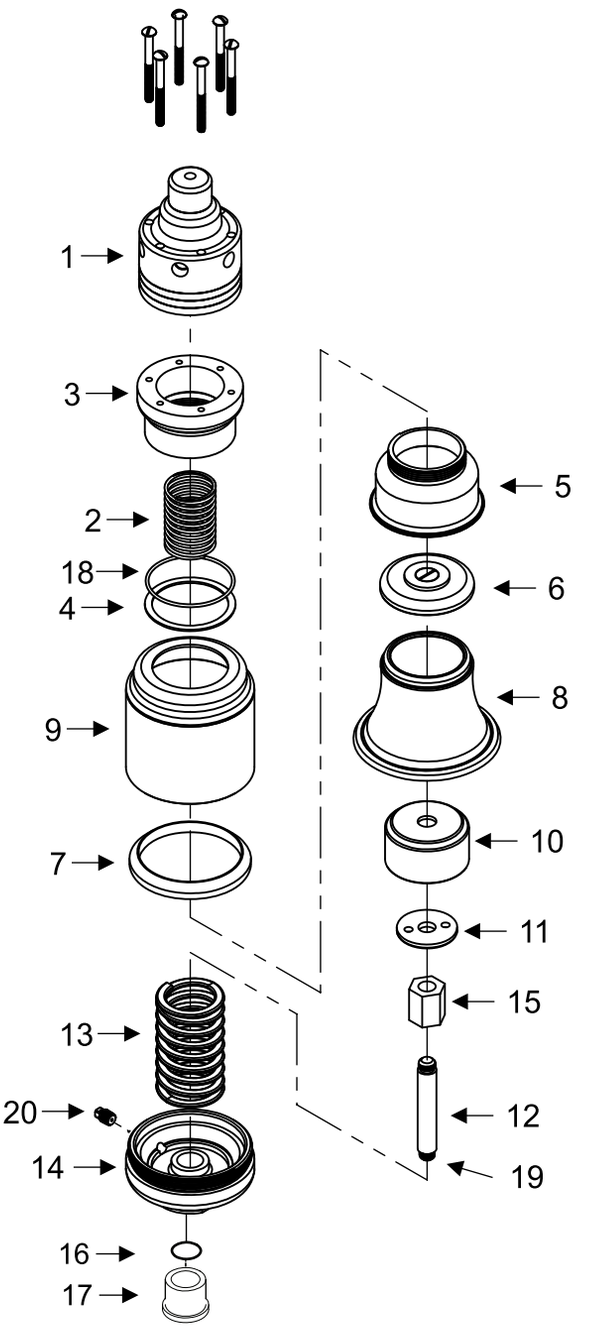
1
3
2
18
4
9
7
13
20
14
16
17
5
6
8
10
11
15
12
19

Pos	Qty	Denomination	
1	1	Moore Positioner	769498
2	1	Range Spring	750998
3	1	Mounting Adapter	764078
4	1	Gasket	755549
5	1	Outer Diaphragm Clamp	763795
6	1	Inner Diaphragm Clamp	763794
7	1	Body Insert	764088
8	1	Diaphragm	763501
9	1	Actuator Cylinder	771543
10	1	Inner Diaphragm Guide	763753
11	1	Nut	754265
12	1	Stem	770737
13	1	Spring	750752
14	1	Bonnet	751044
15	1	Adapter	764089
16	1	Packing	755461
17	1	Seal Retainer	751680
18	1	O-Ring	755530
19	1	Thread Lock	750338
20	1	Vented plug	181256

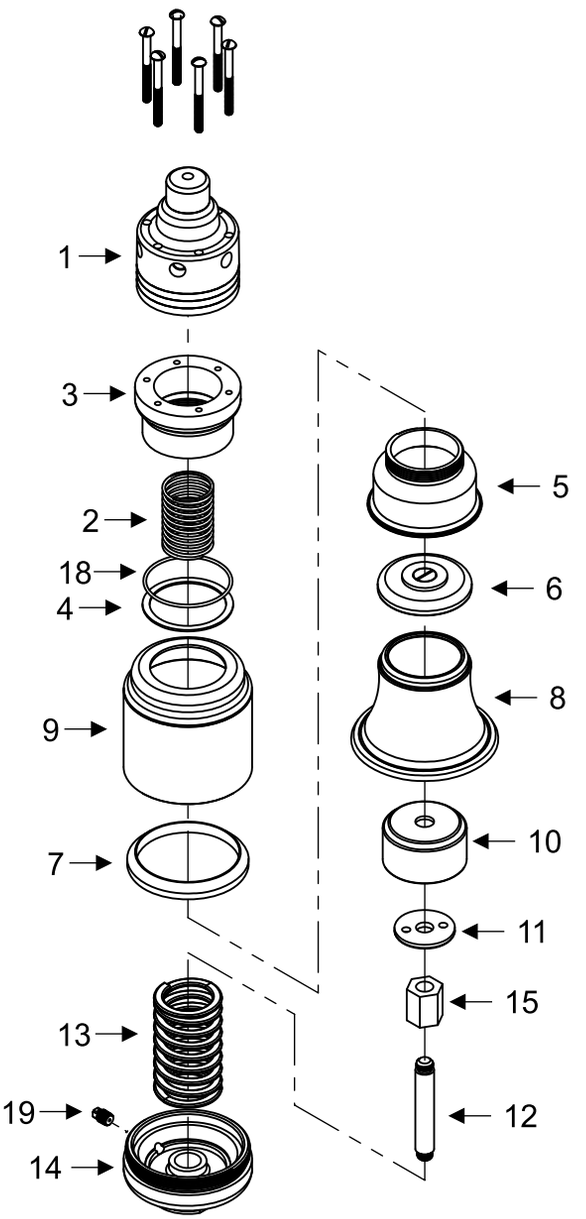
1
3
2
18
4
9
7
13
19
14
5
6
8
10
11
15
12

Pos	Qty	Denomination	
1	1	Moore Positioner	769498
2	1	Range Spring	750392
3	1	Mounting Adapter	764078
4	1	Gasket	755549
5	1	Outer Diaphragm Clamp	763795
6	1	Inner Diaphragm Clamp	763794
7	1	Body Insert	764088
8	1	Diaphragm	763501
9	1	Actuator Cylinder	770543
10	1	Inner Diaphragm Guide	763753
11	1	Nut	754264
12	1	Stem	770096
13	1	Spring	750752
14	1	Bonnet	751044
15	1	Adapter	764089
16	1	Packing	755461
17	1	Seal Retainer	751680
18	1	O-Ring	755530
19	1	Vented plug	181256

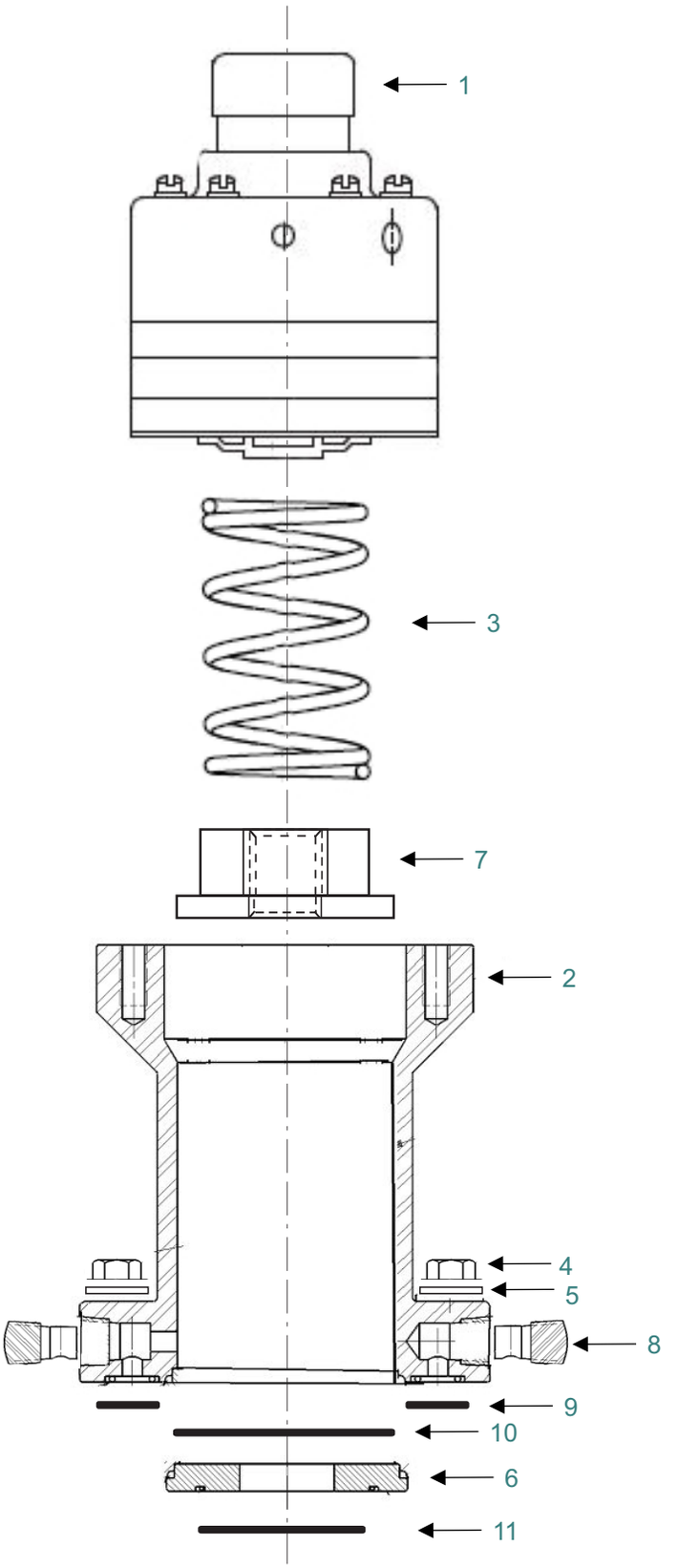
1
3
7
2
4
5
8
9
10
6
11

Pos	Qty	Denomination	
1	11	Positioner	Positioner
2	1	Adapter	761851
3	1	Spring	750998
4	4	Screw	180191
5	4	Lockwasher	189962
6	1	Packing Retainer	761157
7	1	Spring Adapter	762375
8	2	Plug	751541
9	2	O-Ring	755388
10	1	O-Ring	755518
11	1	O-Ring	755469

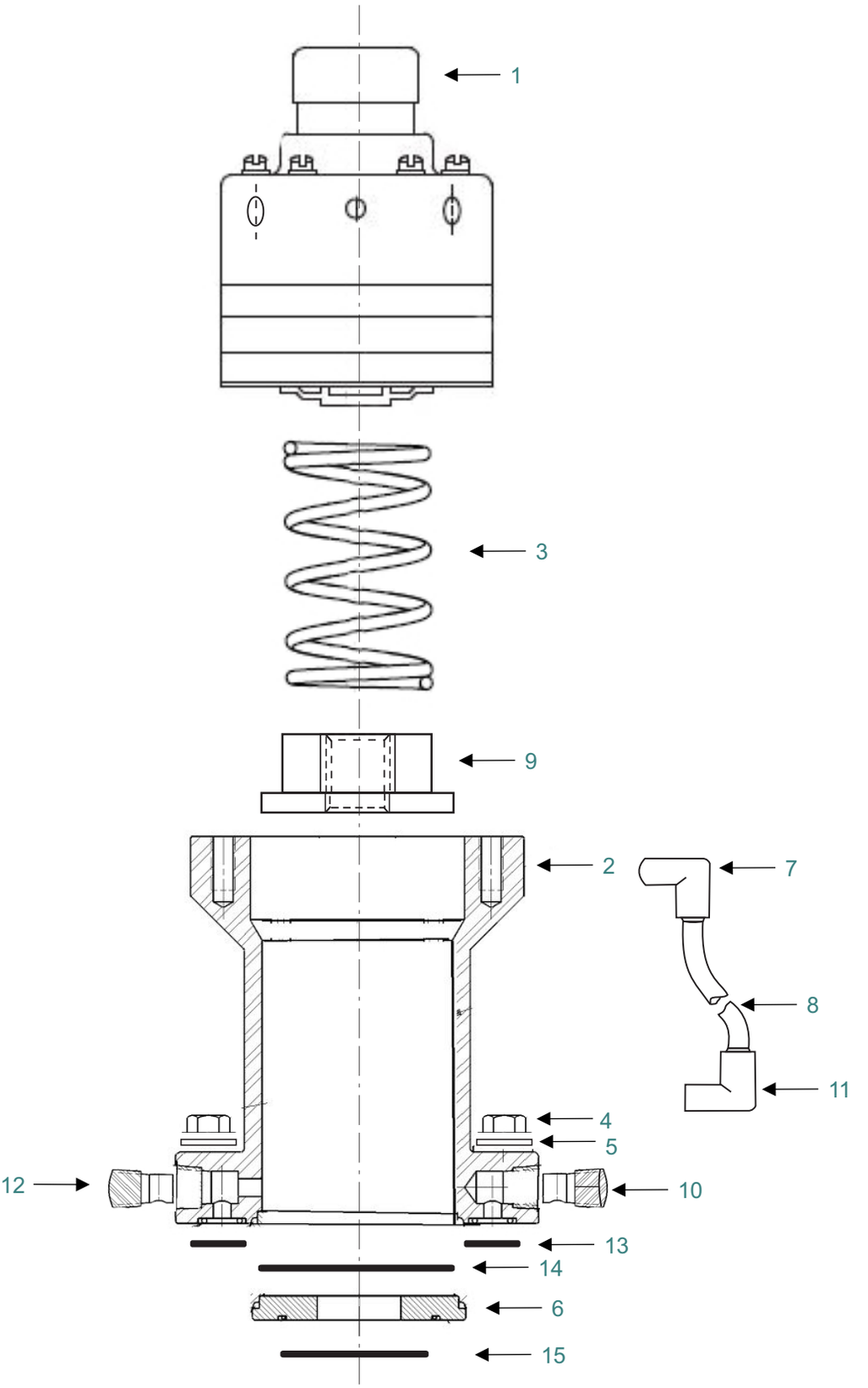
1
3
9
2
7
8
11
4
5
12
10
13
14
6
15

Pos	Qty	Denomination	
1	1	Positioner	769449
2	1	Adapter	761851
3	1	Spring	750998
4	4	Screw	180191
5	4	Lockwasher	189962
6	1	Packing Retainer	761157
7	1	Elbow Fitting	766010
8	14	Poly-Flo Tubing	765006
9	2	Spring Adapter	762375
10	1	Vent Plug	181256
11	1	Elbow Fitting	766009
12	1	Plug	751541
13	2	O-Ring	755388
14	1	O-Ring	755469
15	1	O-Ring	755518

1.8

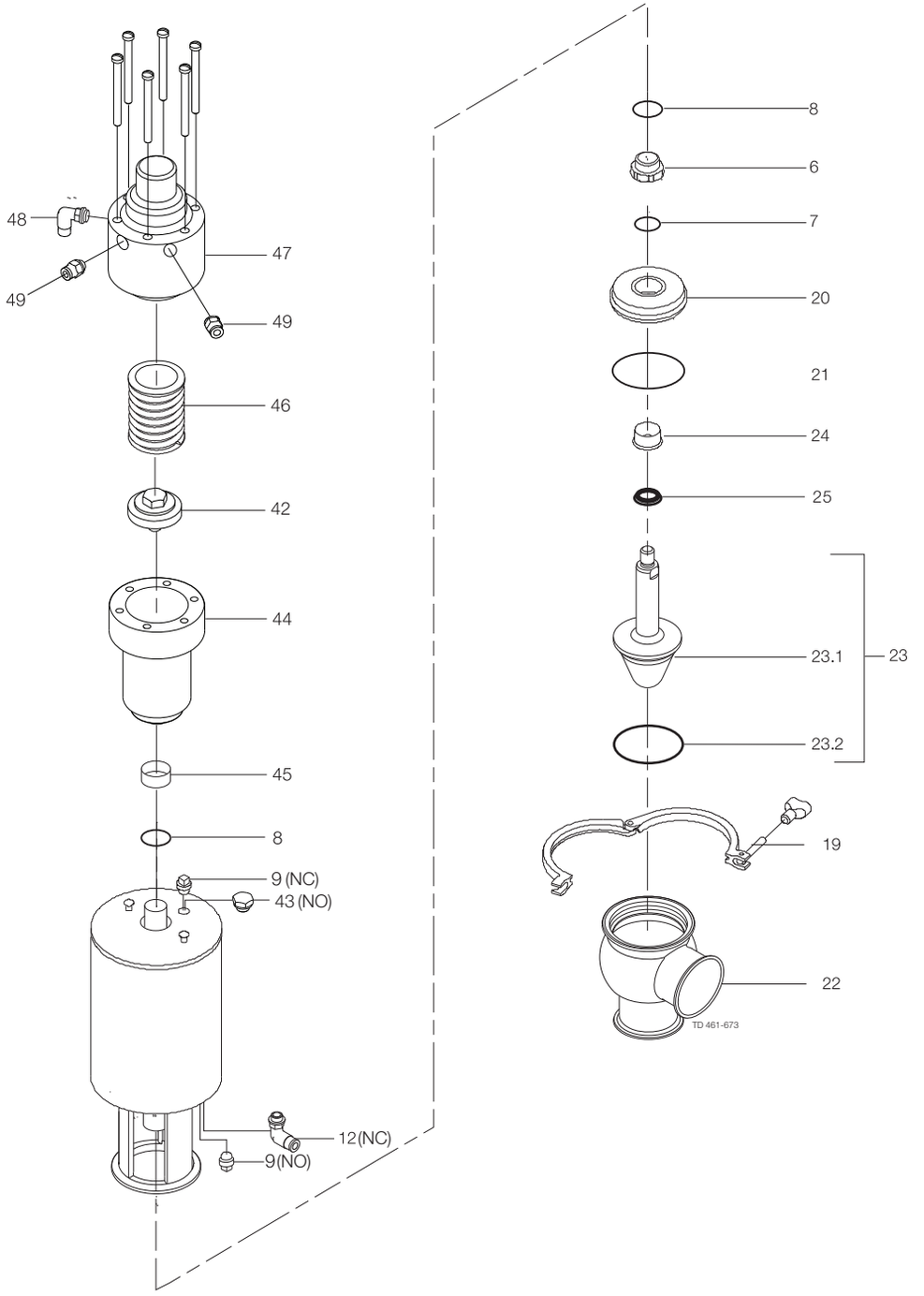
48
49
47
49
46
42
44
45
8
9 (NC)
43 (NO)
12(NC)
9(NO)
8
6
7
20
21
24
25
23.1
23
23.2
19
22
TD 461-673

Pos		Qty	Denomination	1½"	2"	2½"	3"	4"
Actuator								
			Actuator, complete (NO)	9613154831	9613154832	9613154833	9613154834	9613154835
			Actuator, complete (NC)	9613154836	9613154837	9613154838	9613154839	9613154840
6	□	1	Bushing					
7	□	1	O-ring					
8	□	2	O-ring					
9		1	Plug, (NO+NC)	96134141-01	96134141-01	96134141-01	96134141-01	96134141-01
12		1	Air fitting, (NC)	9611994682	9611994682	9611994682	9611994682	9611994682
42		1	Spring connection piece	9613435501	9613435502	9613435502	9613435503	9613435503
43		1	Plug (NO)	9611993709	9611993709	9611993709	9611993709	9611993709
44		1	Positioner yoke	9613435201	9613435201	9613435201	9613435201	9613435201
45	□	1	Guide ring					
46		1	Spring	9634075514	750392	750392	750998	750998
47		1	Positioner, NC	769499	769499	769499	769499	769499
		1	Positioner, NO	769498	769498	769498	769498	769498
48		1	Air fitting, (NC)	9611993068	9611993068	9611993068	9611993068	9611993068
49		2	Air fitting , (NC+NO)	9611993069	9611993069	9611993069	9611993069	9611993069
Clamp								
19		1	Clamp	9612939316	9612939317	9612939318	9612939319	9612939320
Bonnet								
20		1	Bonnet	9613127102	9613127103	9613127104	9613127105	9613127106
21	◆	1	O-ring, EPDM (standard)					
		1	O-ring, HNBR					
		1	O-ring, FPM					
			O-ring, set (10 pcs.) EPDM	9614059422	9614059425	9614059428	9614059431	9614059434
			O-ring, set (10 pcs.) HNBR	9614059423	9614059426	9614059429	9614059432	9614059435
			O-ring, set (10 pcs.) FPM	9614059424	9614059427	9614059430	9614059433	9614059436
24		1	Bushing	9613125002	9613125002	9613125002	9613125002	9613125002
25	◆	1	Lip seal, EPDM (standard)					
		1	Lip seal, HNBR					
		1	Lip seal, FPM					
		0	Lip seal, set (10 pcs.) EPDM	9614059419	9614059419	9614059419	9614059419	9614059419
		0	Lip seal, set (10 pcs.) HNBR	9614059420	9614059420	9614059420	9614059420	9614059420
		0	Lip seal, set (10 pcs.) FPM	9614059421	9614059421	9614059421	9614059421	9614059421
Valve Body								
22		1	Valve body, lower, 2 ports , clamp	9613161603	9613161605	9613161607	9613161609	9613161611
		1	Valve body, lower, 3 ports, clamp	9613161604	9613161606	9613161608	9613161610	9613161612
		1	Valve body, lower 2 ports , welding ends	9613139515	9613139517	9613139519	9613139521	9613139523
		1	Valve body, lower 3 ports , welding ends	9613139516	9613139518	9613139520	9613139522	9613139524
Valve Plug								
23		1	Plug, complete, EPDM (standard) Cv 16	9613158901				
		1	Plug, complete, EPDM (standard) Cv 52	9613158902				
		1	Plug, complete, EPDM (standard) Cv 19	9613168501				
		1	Plug, complete, EPDM (standard) Cv 29	9613168502				
		1	Plug, complete, EPDM (standard) Cv 88		9613158903			
		1	Plug, complete, EPDM (standard) Cv 11		9613168503			
		1	Plug, complete, EPDM (standard) Cv 35		9613168504			
		1	Plug, complete, EPDM (standard) Cv 60		9613168505			
		1	Plug, complete, EPDM (standard) Cv 126			9613158904		
		1	Plug, complete, EPDM (standard) Cv 30			9613168507		
		1	Plug, complete, EPDM (standard) Cv 202				9613158905	
		1	Plug, complete, EPDM (standard) Cv 119				9613168508	
		1	Plug, complete, EPDM (standard) Cv 69				9613168601	
		1	Plug, complete, EPDM (standard) Cv 290					9613158906
		1	Plug, complete, EPDM (standard) Cv 148					9613168602
		1	Plug, complete, EPDM (standard) Cv 193					9613168603
		1	Plug, complete, HNBR Cv 16	9613158913				
		1	Plug, complete, HNBR Cv 52	9613158914				
		1	Plug, complete, HNBR Cv 19	9613168517				
		1	Plug, complete, HNBR Cv 29	9613168518				
		1	Plug, complete, HNBR Cv 88		9613158915			
		1	Plug, complete, HNBR Cv 11		9613168519			
		1	Plug, complete, HNBR Cv 35		9613168520			
		1	Plug, complete, HNBR Cv 60		9613168521			
		1	Plug, complete, HNBR Cv 126			9613158916		
		1	Plug, complete, HNBR Cv 30			9613168523		
		1	Plug, complete, HNBR Cv 202				9613158917	
		1	Plug, complete, HNBR Cv 119				9613168524	
		1	Plug, complete, HNBR Cv 69				9613168607	
		1	Plug, complete, HNBR Cv 290					9613158918
		1	Plug, complete, HNBR Cv 148					9613168608
		1	Plug, complete, HNBR Cv 193					9613168609

1.8

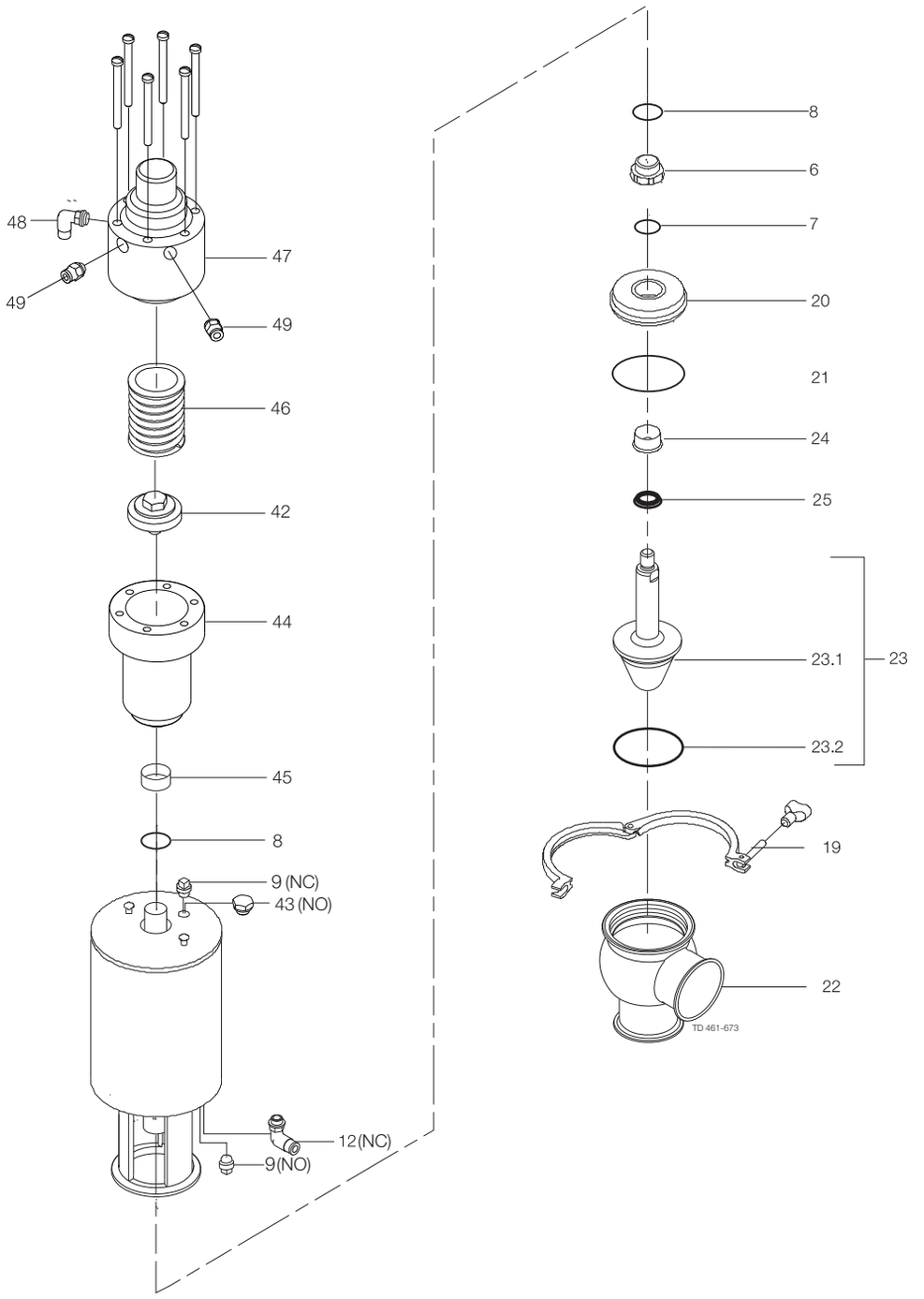
48
49
47
49
46
42
44
45
8
9 (NC)
43 (NO)
12(NC)
9(NO)
8
6
7
20
21
24
25
23.1
23
23.2
19
22
TD 461-673

Pos	Qty	Denomination	1½"	2"	2½"	3"	4"
23	1	Plug, complete, FPM Cv 16	9613158925				
	1	Plug, complete, FPM Cv 52	9613158926				
	1	Plug, complete, FPM Cv 19	9613168533				
	1	Plug, complete, FPM Cv 29	9613168534				
	1	Plug, complete, FPM Cv 88		9613158927			
	1	Plug, complete, FPM Cv 11		9613168535			
	1	Plug, complete, FPM Cv 35		9613168536			
	1	Plug, complete, FPM Cv 60		9613168537			
	1	Plug, complete, FPM Cv 126			9613158928		
	1	Plug, complete, FPM Cv 30			9613168539		
	1	Plug, complete, FPM Cv 202				9613158929	
	1	Plug, complete, FPM Cv 119				9613168540	
	1	Plug, complete, FPM Cv 69				9613168613	
	1	Plug, complete, FPM Cv 290					9613158930
	1	Plug, complete, FPM Cv 148					9613168614
	1	Plug, complete, FPM Cv 193					9613168615
23.1	1	Plug, Cv 16	9613158801				
	1	Plug, Cv 52	9613158802				
	1	Plug, Cv 19	9613165001				
	1	Plug, Cv 29	9613165002				
	1	Plug, Cv 88		9613158803			
	1	Plug, Cv 11		9613165003			
	1	Plug, Cv 35		9613165004			
	1	Plug, Cv 60		9613165005			
	1	Plug, Cv 126			9613158804		
	1	Plug, Cv 30			9613165007		
	1	Plug, Cv 202				9613158805	
	1	Plug, Cv 119				9613165008	
	1	Plug, Cv 69				9613167001	
	1	Plug, Cv 290					9613158806
	1	Plug, Cv 148					9613167002
	1	Plug, Cv 193					9613167003
23.2♦	1	Plug seal, EPDM (standard)					
	1	Plug seal, HNBR					
	1	Plug seal, FPM					
	0	Plug seal, set (10 pcs.) EPDM	9614059404	9614059407	9614059410	9614059413	9614059416
	0	Plug seal, set (10 pcs.) HNBR	9614059405	9614059408	9614059411	9614059414	9614059417
	0	Plug seal, set (10 pcs.) FPM	9614059406	9614059409	9614059412	9614059415	9614059418

		1½"	2"	2½"	3"	4"
□	**Service kit, actuator**	**9611926737**	**9611926737**	**9611926737**	**9611926737**	**9611926737**
♦	**Service kit, EPDM**	**9611926502**	**9611926503**	**9611926504**	**9611926505**	**9611926506**
♦	**Service kit, HNBR**	**9611926508**	**9611926509**	**9611926510**	**9611926511**	**9611926512**
♦	**Service kit, FPM**	**9611926514**	**9611926515**	**9611926516**	**9611926517**	**9611926518**

Parts marked with □♦ are included in the service kits.

Recommended spare parts: Service kits.

TD 900-461/1

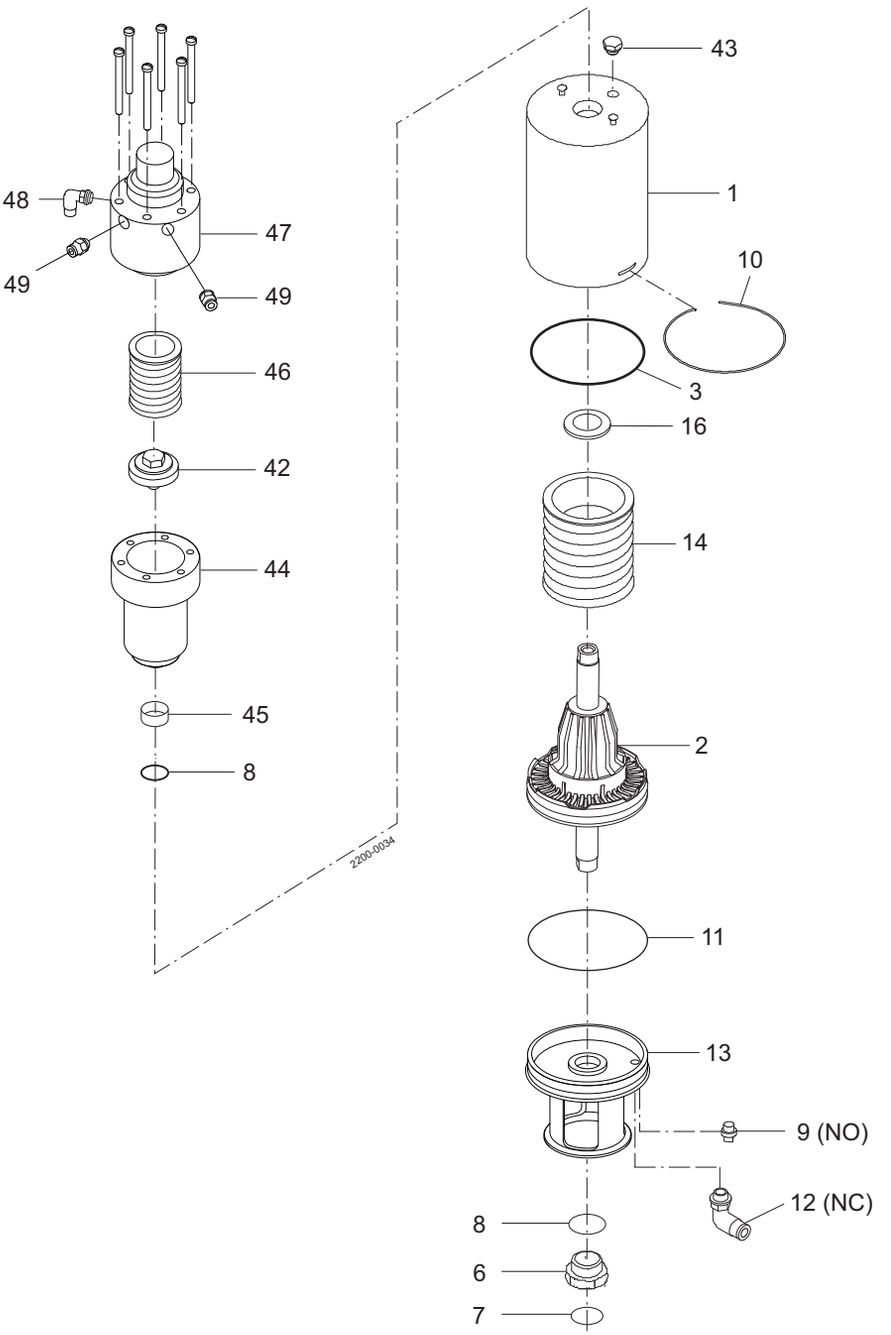
43
1
10
3
16
14
2
11
13
9 (NO)
12 (NC)
8
6
7
48
47
49
49
46
42
44
45
8
2200-0034

Pos		Qty	Denomination	1½"	2"	2½"	3"	4"
			Actuator, complete (NO)	9613185316	9613185317	9613185318	9613185319	9613185320
			Actuator, complete (NC)	9613185321	9613185322	9613185323	9613185324	9613185325
1		1	Cylinder	9613142520	9613142521	9613142521	9613142522	9613142522
2		1	Piston	9613132201	9613132301	9613132301	9613132401	9613132401
3	□	1	O-ring					
5		1	Adapter	9614065301	9614065301	9614065301	9614065301	9614065301
6	□	1	Bushing					
7	□	1	O-ring					
8	□	2	O-ring					
9		1	Plug, (NO+NC)	9613414101	9613414101	9613414101	9613414101	9613414101
10		1	Lock wire	9613143201	9613143202	9613143202	9613143203	9613143203
11	□	1	O+ring					
12		1	Air fitting, (NC)	9611994682	9611994682	9611994682	9611994682	9611994682
13		1	Yoke	9613154301	9613154402	9613154502	9613154603	9613154703
14		1	Spring assembly	9613132501	9613132502	9613132502	9613132503	9613132503
16	□	1	Support disc					
42		1	Spring connection piece	9613435501	9613435502	9613435502	9613435503	9613435503
43		1	Plug, (NO)	9611993709	9611993709	9611993709	9611993709	9611993709
44		1	Positioner yoke	9613435201	9613435201	9613435201	9613435201	9613435201
45	□	1	Guide ring					
46		1	Spring	9634075514	750392	750392	750998	750998
47		1	Positioner , NC	769499	769499	769499	769499	769499
		1	Positioner, NO	769498	769498	769498	769498	769498
48		1	Air fitting, (NC)					
49		2	Air fitting, (NC+NO)					

Parts marked with □ are included in the service kits.

Recommended spare parts: Service kits.

TD 900481/2

		1½"	2"	2½"	3"	4"
□	Service kit, Actuator	9611926740	9611926741	9611926741	9611926742	9611926742

Not manufactured anymore

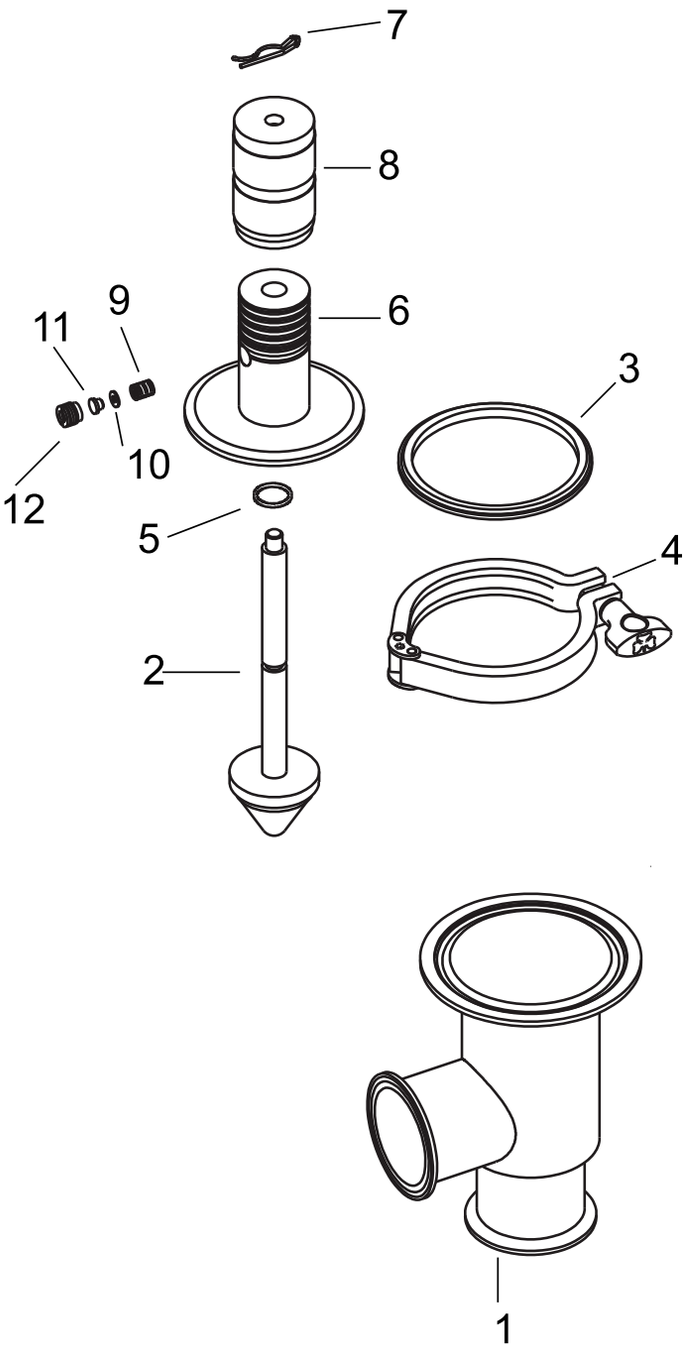

Pos		Qty	Denomination	1”	1 1/2”	2”	2 1/2”	3”
1		1	Body	NA	NA	NA	NA	NA
2		1	Valve Stem	771749	770051	770052	770104	771982
3	□	1	Body gasket BUNA	755415	755415	755416	755417	755418
	□	1	Body gasket EPDM	750157	750157	750062	751799	750811
	□	1	Body gasket SFY	750667	750667	750497	750209	750609
4		1	Clamp	212205	212205	212206	212207	212208
5	□	1	O-ring BUNA	755351	755351	755351	755357	755357
	□	1	O-ring EPDM	750036	750036	750036	750037	750037
	□	1	O-ring SFY	750172	750172	750172	750173	750173
6		1	Bonnet	750012	750012	750014	NA	NA
7	□	1	Clip	628530	628530	628530	628531	628531
8		1	Knurled handle	750331	750331	750331	750332	750332
9		1	Spring	750786	750786	750786	750786	750786
10		1	Washer	754860	754860	754860	754860	754860
11	□	1*	Friction button	758771	758771	758771	758771	758771
12		1	Threaded bushing	764757	764757	764757	764757	764757

*Quantity for 1”, 1 1/2”, and 2” is 2 pieces. Quantity for 2 1/2” and 3” is 3 pieces.

Parts marked with □ are included in the service kits.

		1”	1 1/2”	2”	2 1/2”	3”
□	Service Kit BUNA	9613990121	9613990121	9613990124	9613990127	9613990130
□	Service Kit EPDM	9613990122	9613990122	9613990125	9613990128	9613990131
□	Service Kit SFY	9613990123	9613990123	9613990126	9613990129	9613990132

Not manufactured anymore

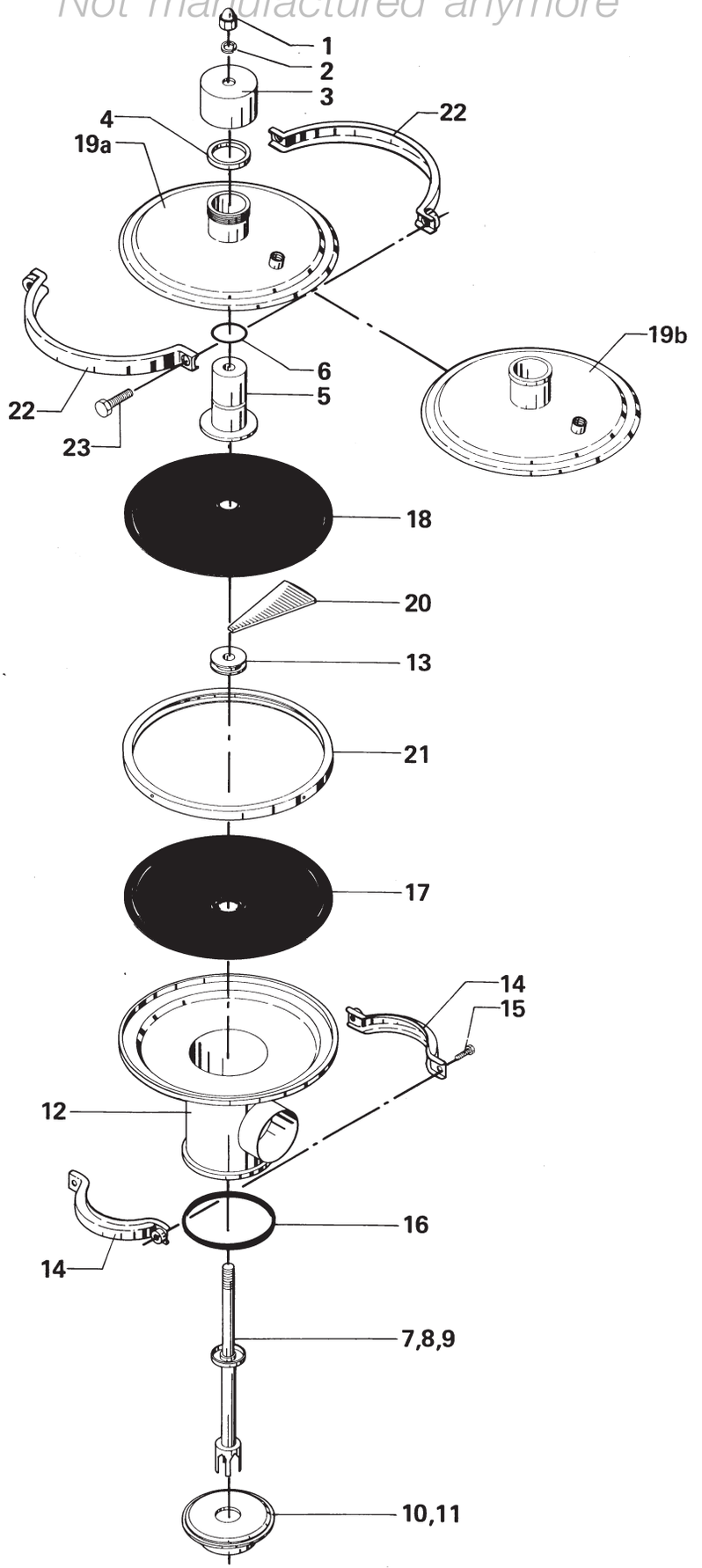

Pos		Qty	Denomination	CPM 8, CPM 16, CPM 33
1		1	Cap nut	22189115
2		1	Spring washer	9611991887
3		1	Collar	
4		1	Ring	
5		1	Guide	3135600721
6	▲	1	O-ring	22340649
7		1	Valve plug, kv-8	3135600371
8		1	Valve plug, kv-16	3135600052
9		1	Valve plug, kv-33	3135600051
10		1	Valve seat, kv-8,16	
11		1	Valve seat, kv-33	
12		1	Valve body	
13		1	Inner ring	3135600631
14		2	Clamp half	
15		2	Screw	
16	▲	1	Valve body packing, EPDM	3135301281
		1	Valve body packing, NBR	3135301282
		1	Valve body packing, FPM	3135301283
		1	Valve body packing, PTFE	3135304511
17	▲	1	Diaphragm, PTFE covered EPDM (product side)	3135600144
18	▲	1	Diaphragm, NBR, (air side) marked with blue dot	3135600142
17/18		1	Diaphragm, NBR, (optional) marked with blue dot	3135600142
19		1	Cover (with thread)	3135600671
20		12	Support sector	3135600621
21		1	Outer ring	3135600641
22		2	Clamp half	
23		2	Screw	

Parts marked with ▲ are included in Service kit.

	CPM 8, CPM 16, CPM 33
Service kit	9611920118

Not manufactured anymore

1.8

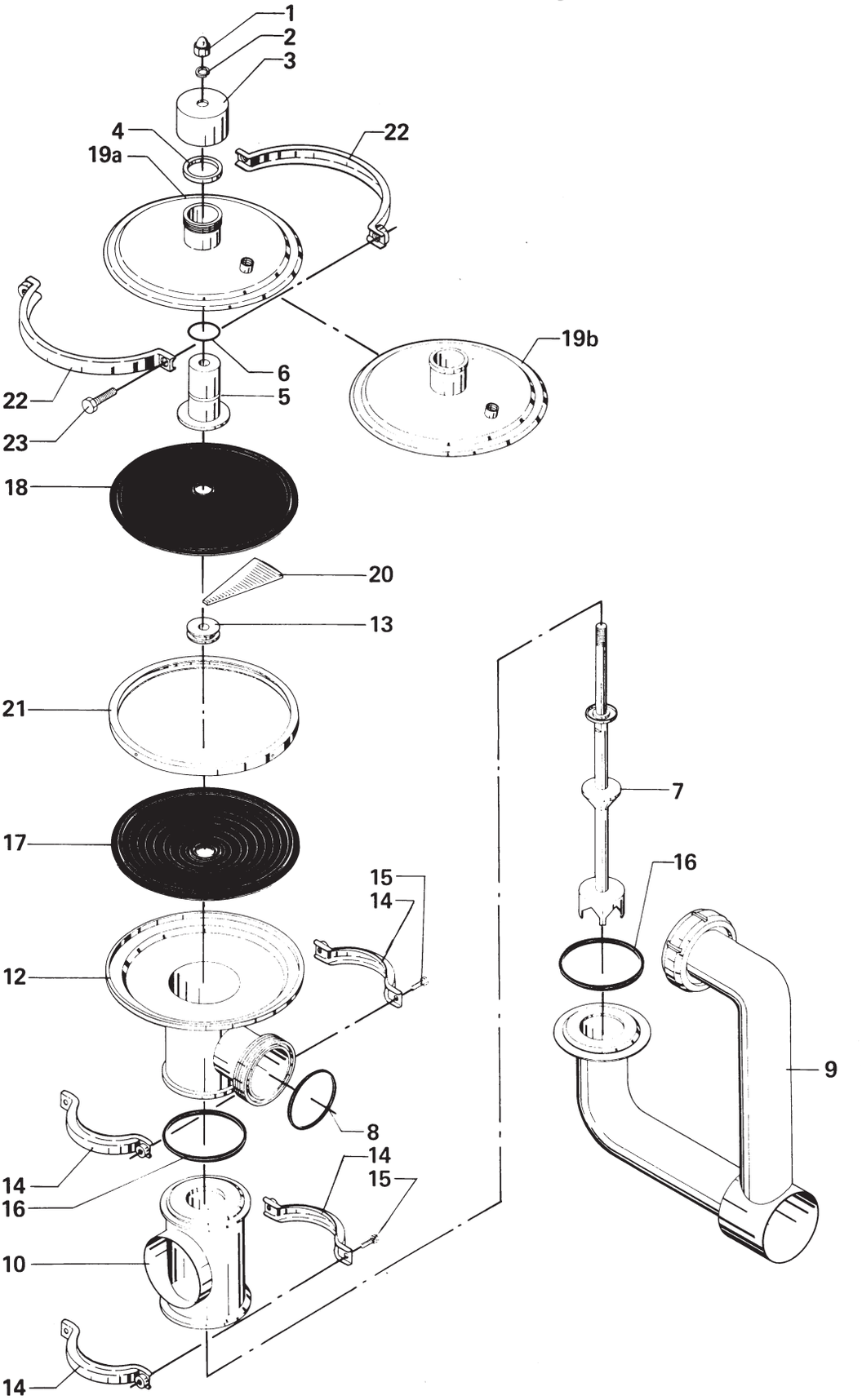

Pos		Qty	Denomination	D-60
1		1	Cap nut	22189115
2		1	Spring washer	9611991887
3		1	Collar	3135600031
4		1	Ring	
5		1	Guide	3135600721
6	▲	1	O-ring	22340649
7		1	Plug	3135600061
8		1	Packing, EPDM (standard)	3131703785
		1	Packing, NBR	190604
		1	Packing, FPM	3131703782
9		1	Inlet valve	
10		1	Valve body, lower	3135600181
12		1	Valve body	
13		1	Inner ring	3135600631
14+15		4	Clamp half + screws	3132000273
16	▲	2	Valve body packing, EPDM (standard)	3135301281
		2	Valve body packing, NBR	3135301282
17	▲	1	Diaphragm, PTFE covered EPDM (product side)	3135600144
		1	Diaphragm, NBR, marked with blue dot (optional)	3135600142
18	▲	1	Diaphragm, NBR, (air side) marked with blue dot	3135600142
19		1	Cover (with thread)	3135600671
20		12	Support sector	3135600621
21		1	Outer ring	3135600641
22		2	Clamp half	
23		2	Screw	

	D-60
Service Kit	9611920118

Parts marked with ▲ are included in Service Kit.

Recommended spare parts: Service kits.

Not manufactured anymore

1.8

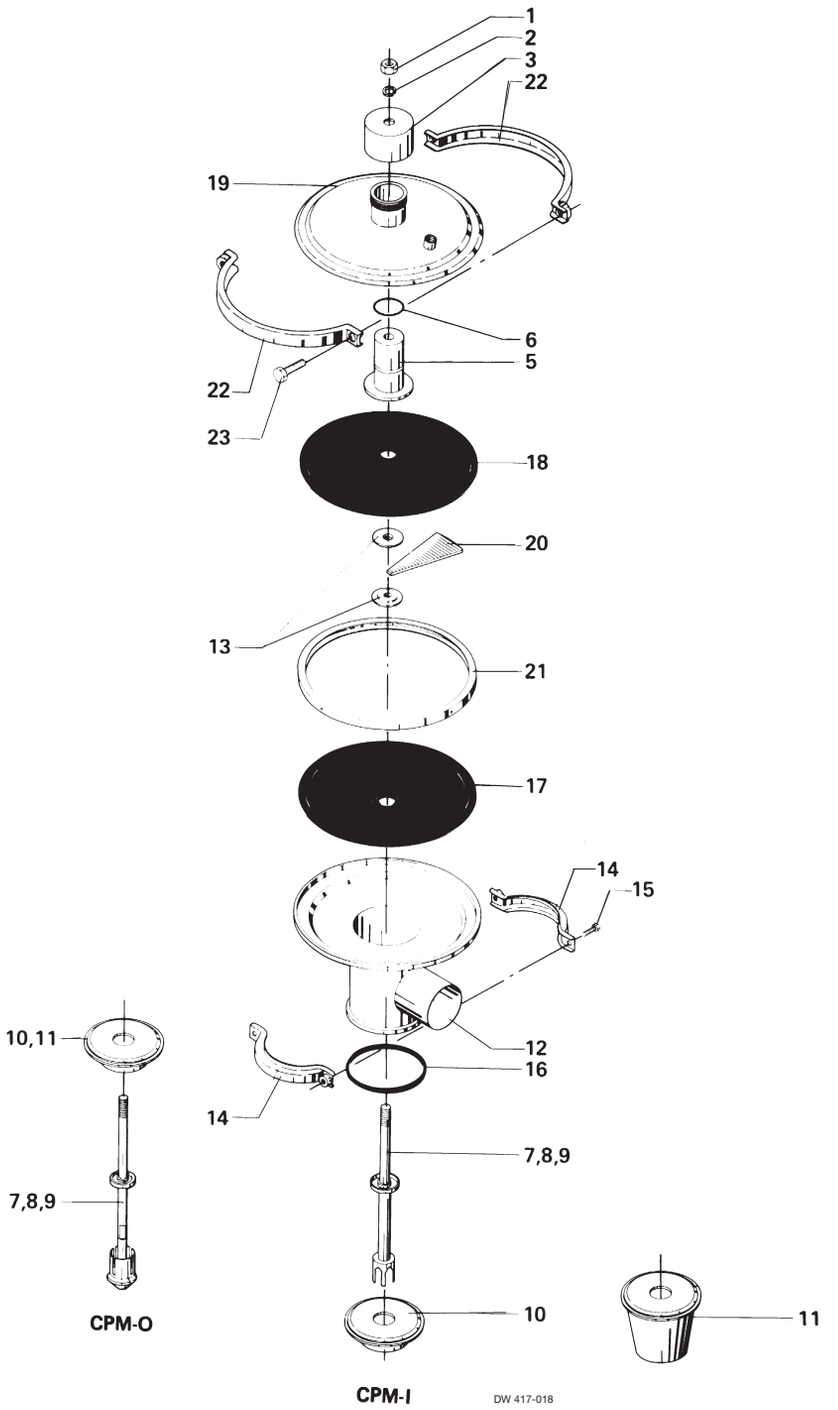

Pos		Qty	Denomination	CPM-I	CPM-O
1		1	Nut	22189115	22189115
2		1	Spring washer	9611991887	9611991887
3		1	Top	3135600031	3135600031
5		1	Guide	3135600721	3135600721
6	□	1	O-ring	22340649	22340649
7		1	Valve plug, kv-7		
8		1	Valve plug, kv-14		
9		1	Valve plug, kv-25		
10		1	Valve seat, kv-7.14		
11		1	Valve seat, kv-25		
12		1	Valve body		
13		2	Inner ring	3135600631	3135600631
14+15		1	Clamp and screws (Period 9209-)	3132000273	3132000273
16	□	1	Valve body packing, EPDM (Standard)	3135301281	3135301281
		1	Valve body packing, NBR (optional)	3135301282	3135301282
17	□	1	Diaphragm,PTFE covered EPDM (Standard) (product side)	3135600144	3135600144
18	□	1	Diaphragm, NBR (air side), Blue dot	3135600142	3135600142
		1	Diaphragm, PTFE covered EPDM (optional)	3135600144	3135600144
19		1	Cover	3135600671	3135600671
20		12	Support sector	3135600621	3135600621
21		1	Outer ring	3135600641	3135600641
22		2	Clamp half, (Period 9311-)	9612335201	9612335201
		2	Clamp half, (Period 8011-9311)	9611920219	9611920219
23		2	Screw, (Period 9311-)	9611991222	9611991222
24		2	Washer (Period 9311-)	9611990786	9611990786

		CPM-I	CPM-O
□	**Service kit**	**9611920118**	**9611920118**

Parts marked with □ are included in Service kit.

N.B.:
Old denomination kv-8, kv-16 and kv33.
New denomination kv-7, kv-14 and kv-25.

Recommended spare parts: Service kit.

900-448

Not manufactured anymore

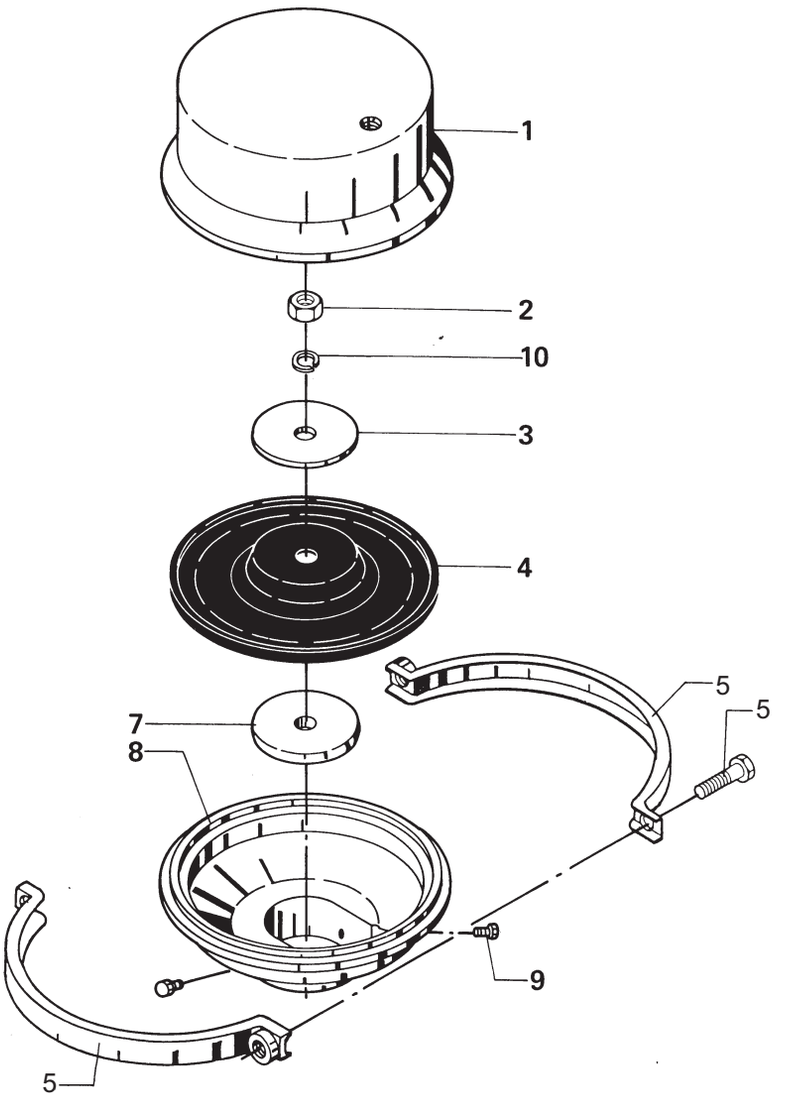

Pos	Qty	Denomination	3135600401
1	1	Cover	
2	1	Nut	22180329
3	1	Washer	
4	1	Bellow	3135600441
5	1	Clamp set	3132000272
7	1	Support washer	
8	1	Booster housing	
9	2	Screw	22103102
10	1	Spring washer	9611991887

Recommended spare parts: Pos. 4

Not manufactured anymore

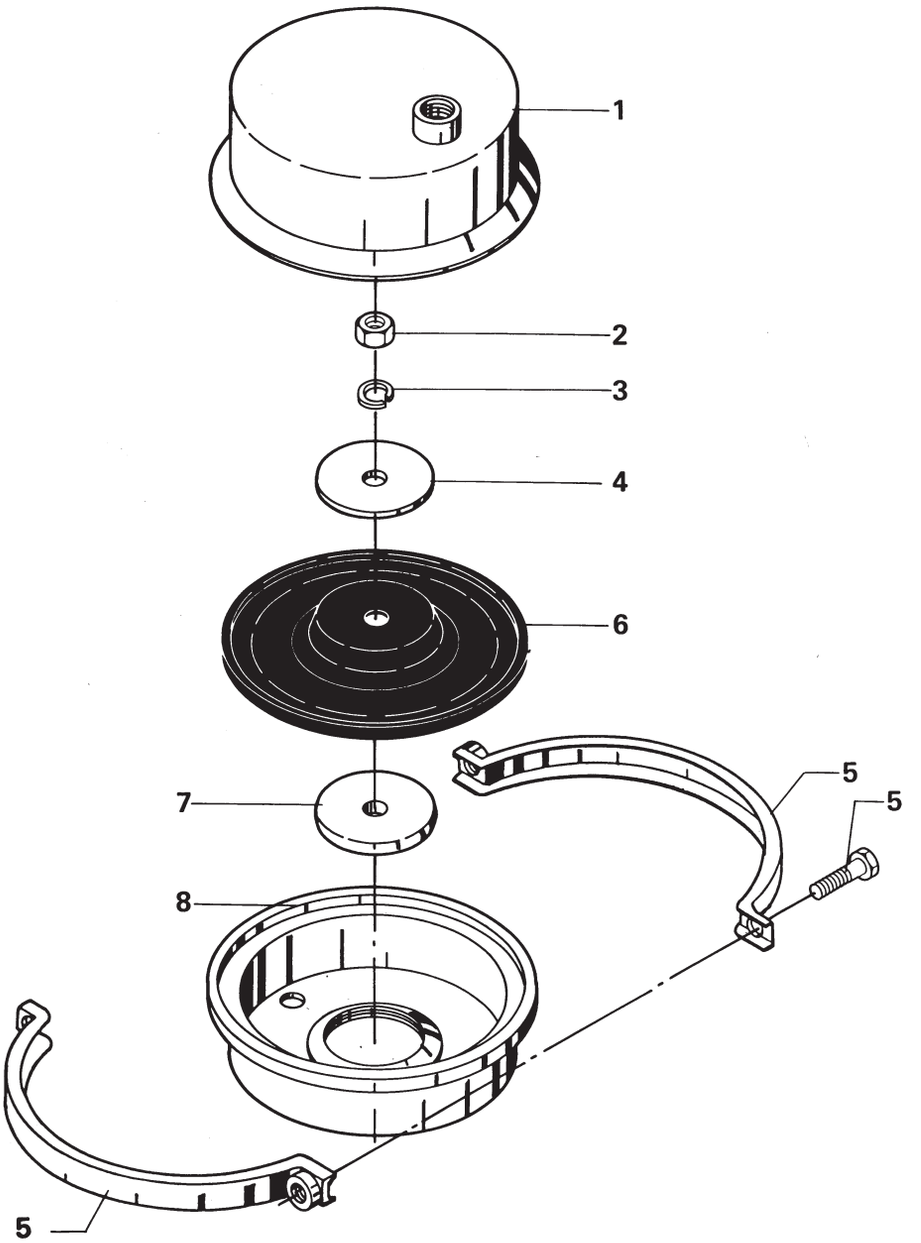

Pos	Qty	Denomination	3135600501
1	1	Booster cover	
2	1	Nut	22180329
3	1	Spring washer	9611991887
4	1	Washer	
5	1	Clamp set	3132000272
6	1	Bellow	3135600441
7	1	Support washer	
8	1	Booster housing	

Recommended spare parts: Pos. 6

1.8

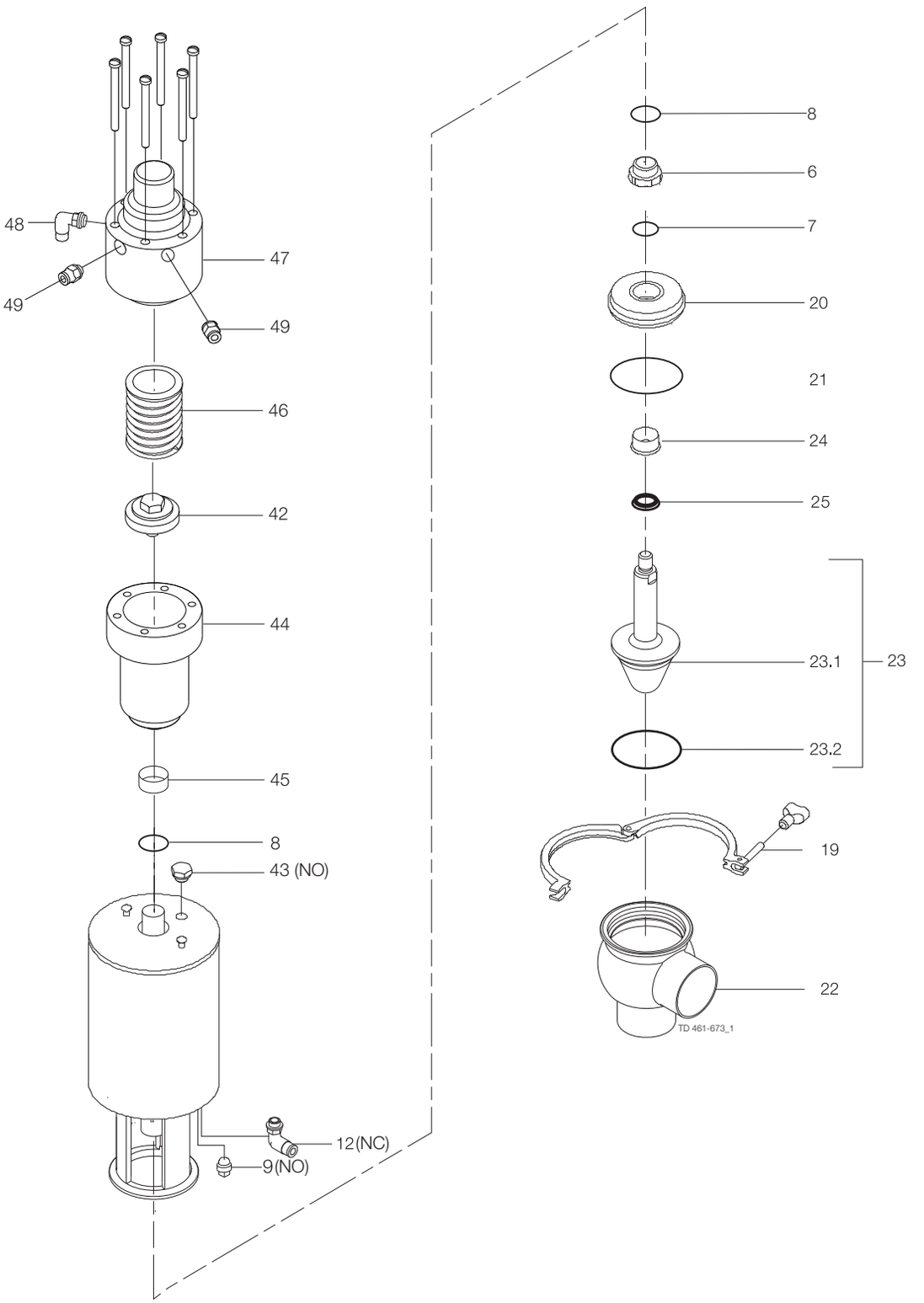
48
49
47
49
46
42
44
45
8
43 (NO)
12(NC)
9(NO)
8
6
7
20
21
24
25
23.1
23
23.2
19
22
TD 461-673_1

Pos		Qty	Denomination	DN40 38 mm	DN50 51 mm	DN65 63.5mm	DN80 76.1 mm	DN100 101.6 mm
			Actuator, complete , (NO)	9613154801	9613154802	9613154803	9613154804	9613154805
			Actuator, complete , (NC)	9613154806	9613154807	9613154808	9613154809	9613154810
5		1	Adapter, plastic (- 0115)					
		1	Adapter, steel (0115 -)	9614065301	9614065301	9614065301	9614065301	9614065301
6	●	1	Bushing					
7	●	1	O-ring					
8	●	2	O-ring					
9		1	Plug (NO+NC)	9613414101	9613414101	9613414101	9613414101	9613414101
12		1	Air fitting (NC)	9611991988	9611991988	9611991988	9611991988	9611991988
42		1	Spring connection piece	9613435501	9613435502	9613435502	9613435503	9613435503
43		1	Plug (NO)	9611993709	9611993709	9611993709	9611993709	9611993709
44		1	Positioner yoke	9613435201	9613435201	9613435201	9613435201	9613435201
46		1	Spring	9634075514	750392	750392	750998	750998
47		1	Positioner , NC	769499	769499	769499	769499	769499
		1	Positioner, NO	769498	769498	769498	769498	769498
48		1	Air fitting (NC)	9611993068	9611993068	9611993068	9611993068	9611993068
49		2	Air fitting (NC+NO)	9611993069	9611993069	9611993069	9611993069	9611993069
Clamp								
19		1	Clamp	9612939303	9612939304	9612939305	9612939306	9612939307
Bonnet								
20		1	Bonnet	9613127102	9613127103	9613127104	9613127105	9613127106
21	▲	1	O-ring, EPDM (std)					
	▲	1	O-ring , HNBR					
	▲	1	O-ring , FPM					
			O-ring set (10 pcs.) EPDM	9614059422	9614059425	9614059428	9614059431	9614059434
			O-ring set (10 pcs.) HNBR	9614059423	9614059426	9614059429	9614059432	9614059435
			O-ring set (10 pcs.) FPM	9614059424	9614059427	9614059430	9614059433	9614059436
24		1	Bushing	9613125002	9613125002	9613125002	9613125002	9613125002
25	▲	1	Lip seal, EPDM (std)					
	▲	1	Lip seal, HNBR					
	▲	1	Lip seal , FPM					
			Lip seal, set (10 pcs.) EPDM	9614059419	9614059419	9614059419	9614059419	9614059419
			Lip seal, set (10 pcs.) HNBR	9614059420	9614059420	9614059420	9614059420	9614059420
			Lip seal, set (10 pcs.) FPM	9614059421	9614059421	9614059421	9614059421	9614059421
Valve Body								
22		1	Valve body, lower, 2 ports ISO	9613139503	9613139505	9613139507	9613139509	9613139511
		1	Valve body , lower, 3 ports ISO	9613139504	9613139506	9613139508	9613139510	9613139512
		1	Valve body , lower, 2 ports DIN	9613139603	9613139605	9613139607	9613139609	9613139611
		1	Valve body, lower, 3 ports DIN	9613139604	9613139606	9613139608	9613139610	9613139612
Valve Plug								
23		1	Plug, complete , ISO, EPDM (std) Kv 14	9613158901				
		1	Plug, complete, ISO, EPDM (std) Kv 44	9613158902				
		1	Plug, complete, ISO, EPDM (std) Kv 16	9613168501				
		1	Plug, complete , ISO, EPDM (std) Kv 25	9613168502				
		1	Plug, complete , ISO, EPDM (std) Kv 75		9613158903			
		1	Plug, complete , ISO, EPDM (std) Kv 9		9613168503			
		1	Plug, complete, ISO, EPDM (std) Kv 30		9613168504			
		1	Plug, complete, ISO, EPDM (std) Kv 51		9613168505			
		1	Plug, complete, ISO, EPDM (std) Kv 107			9613158904		
		1	Plug, complete, ISO, EPDM (std) Kv 26			9613168507		
		1	Plug, complete, ISO, EPDM (std) Kv 172				9613158905	
		1	Plug, complete, ISO, EPDM (std) Kv 101				9613168508	
		1	Plug, complete, ISO, EPDM (std) Kv 59				9613168601	
		1	Plug, complete, ISO, EPDM (std) Kv 250					9613158906
		1	Plug, complete, ISO, EPDM (std) Kv 125					9613168602
		1	Plug, complete, ISO, EPDM (std) Kv 164					9613168603
		1	Plug, complete, DIN, EPDM (std) Kv 14	9613158907				
		1	Plug, complete, DIN, EPDM (std) Kv 44	9613158908				
		1	Plug, complete, DIN, EPDM (std) Kv 16	9613168509				
		1	Plug, complete, DIN, EPDM (std) Kv 25	9613168510				
		1	Plug, complete , DIN, EPDM (std) Kv 75		9613158909			
		1	Plug, complete , DIN, EPDM (std) Kv 9		9613168511			
		1	Plug, complete, DIN, EPDM (std) Kv 30		9613168512			
		1	Plug, complete, DIN, EPDM (std) Kv 51		9613168513			
		1	Plug, complete, DIN, EPDM (std) Kv 107			9613158910		
		1	Plug, complete, DIN, EPDM (std) Kv 26			9613168515		
		1	Plug, complete, DIN, EPDM (std) Kv 172				9613158911	
		1	Plug, complete, DIN, EPDM (std) Kv 101				9613168516	
		1	Plug, complete, DIN, EPDM (std) Kv 59				9613168604	
		1	Plug, complete, DIN, EPDM (std) Kv 250					9613158912
		1	Plug, complete, DIN, EPDM (std) Kv 125					9613168605
		1	Plug, complete, DIN, EPDM (std) Kv 164					9613168606

1.8

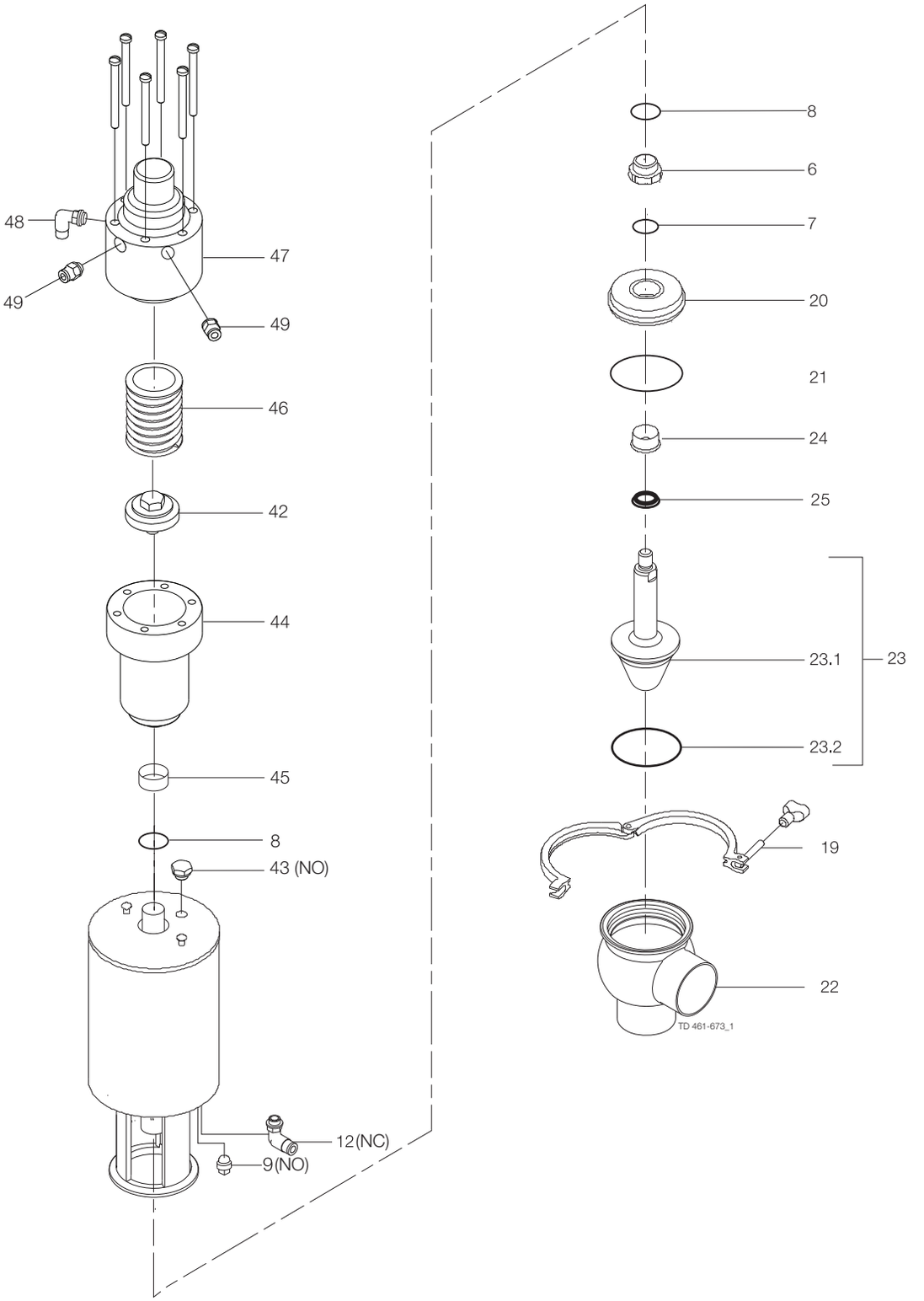
48
49
47
49
46
42
44
45
8
43 (NO)
12(NC)
9(NO)
8
6
7
20
21
24
25
23.1
23
23.2
19
22
TD 461-673_1

Pos	Qty	Denomination	DN40 38 mm	DN50 51 mm	DN65 63.5mm	DN80 76.1 mm	DN100 101.6 mm
23	1	Plug, complete, ISO, HNBR Kv 14	9613158913				
	1	Plug, complete, ISO, HNBR Kv 44	9613158914				
	1	Plug, complete, ISO, HNBR Kv 16	9613168517				
	1	Plug, complete, ISO, HNBR Kv 25	9613168518				
	1	Plug, complete, ISO, HNBR Kv 75		9613158915			
	1	Plug, complete, ISO, HNBR Kv 9		9613168519			
	1	Plug, complete, ISO, HNBR Kv 30		9613168520			
	1	Plug, complete, ISO, HNBR Kv 51		9613168521			
	1	Plug, complete, ISO, HNBR Kv 107			9613158916		
	1	Plug, complete, ISO, HNBR Kv 26			9613168523		
	1	Plug, complete, ISO, HNBR Kv 172				9613158917	
	1	Plug, complete, ISO, HNBR Kv 101				9613168524	
	1	Plug, complete, ISO, HNBR Kv 59				9613168607	
	1	Plug, complete, ISO, HNBR Kv 250					9613158918
	1	Plug, complete, ISO, HNBR Kv 125					9613168608
	1	Plug, complete, ISO, HNBR Kv 164					9613168609
	1	Plug, complete, DIN, HNBR Kv 14	9613158919				
	1	Plug, complete, DIN, HNBR Kv 44	9613158920				
	1	Plug, complete, DIN, HNBR Kv 16	9613168525				
	1	Plug, complete, DIN, HNBR Kv 25	9613168526				
	1	Plug, complete, DIN, HNBR Kv 75		9613158921			
	1	Plug, complete, DIN, HNBR Kv 9		9613168527			
	1	Plug, complete, DIN, HNBR Kv 30		9613168528			
	1	Plug, complete, DIN, HNBR Kv 51		9613168529			
	1	Plug, complete, DIN, HNBR Kv 107			9613158922		
	1	Plug, complete , DIN, HNBR Kv 26			9613168531		
	1	Plug, complete, DIN, HNBR Kv 172				9613158923	
	1	Plug, complete, DIN, HNBR Kv 101				9613168532	
	1	Plug, complete, DIN, HNBR Kv 59				9613168610	
	1	Plug, complete, DIN, HNBR Kv 250					9613158924
	1	Plug, complete, DIN, HNBR Kv 125					9613168611
	1	Plug, complete, DIN, HNBR Kv 164					9613168612
	1	Plug, complete, ISO, FPM Kv 14	9613158925				
	1	Plug, complete, ISO, FPM Kv 44	9613158926				
	1	Plug, complete, ISO, FPM Kv 16	9613168533				
	1	Plug, complete, ISO, FPM Kv 25	9613168534				
	1	Plug, complete, ISO, FPM Kv 75		9613158927			
	1	Plug, complete, ISO, FPM Kv 9		9613168535			
	1	Plug, complete, ISO, FPM Kv 30		9613168536			
	1	Plug, complete, ISO, FPM Kv 51		9613168537			
	1	Plug, complete, ISO, FPM Kv 107			9613158928		
	1	Plug, complete, ISO, FPM Kv 26			9613168539		
	1	Plug, complete, ISO, FPM Kv 172				9613158929	
	1	Plug, complete, ISO, FPM Kv 101				9613168540	
	1	Plug, complete, ISO, FPM Kv 59				9613168613	
	1	Plug, complete, ISO, FPM Kv 250					9613158930
	1	Plug, complete, ISO, FPM Kv 125					9613168614
	1	Plug, complete, ISO, FPM Kv 164					9613168615
	1	Plug, complete, DIN, FPM Kv 14	9613158931				
	1	Plug, complete, DIN, FPM Kv 44	9613158932				
	1	Plug, complete, DIN, FPM Kv 16	9613168541				
	1	Plug, complete , DIN, FPM Kv 25	9613168542				
	1	Plug, complete, DIN, FPM Kv 75		9613158933			
	1	Plug, complete, DIN, FPM Kv 9		9613168543			
	1	Plug, complete, DIN, FPM Kv 30		9613168544			
	1	Plug, complete, DIN, FPM Kv 51		9613168545			
	1	Plug, complete, DIN, FPM Kv 107			9613158934		
	1	Plug, complete, DIN, FPM Kv 26			9613168547		
	1	Plug, complete, DIN, FPM Kv 172				9613158935	
	1	Plug, complete, DIN, FPM Kv 101				9613168548	
	1	Plug, complete, DIN, FPM Kv 59				9613168616	
	1	Plug, complete, DIN, FPM Kv 250					9613158936
	1	Plug, complete, DIN, FPM Kv 125					9613168617
	1	Plug, complete, DIN, FPM Kv 164					9613168618

1.8

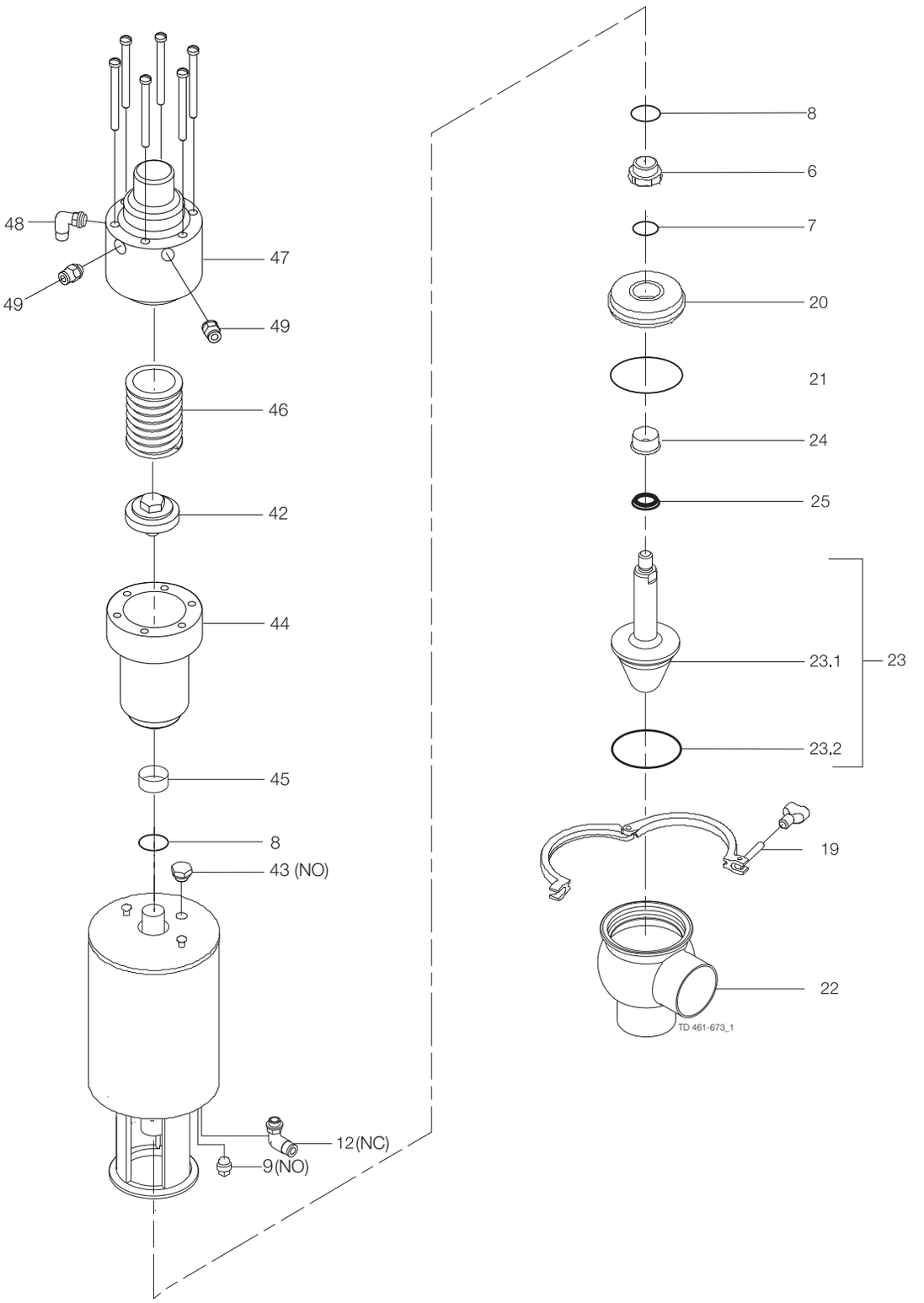
48
49
47
49
46
42
44
45
8
43 (NO)
12(NC)
9(NO)
8
6
7
20
21
24
25
23.1
23
23.2
19
22
TD 461-673_1

Pos	Qty	Denomination	DN40 38 mm	DN50 51 mm	DN65 63.5mm	DN80 76.1 mm	DN100 101.6 mm
23.1	1	Plug , ISO, Kv 14	9613158801				
	1	Plug, ISO, Kv 44	9613158802				
	1	Plug, ISO, Kv 16	9613165001				
	1	Plug, ISO, Kv 25	9613165002				
	1	Plug, DIN, Kv 14	9613158807				
	1	Plug, DIN, Kv 44	9613158808				
	1	Plug , DIN, Kv 16	9613165009				
	1	Plug, DIN, Kv 25	9613165010				
	1	Plug, ISO, Kv 75		9613158803			
	1	Plug, ISO, Kv 9		9613165003			
	1	Plug, ISO, Kv 30		9613165004			
	1	Plug, ISO, Kv 51		9613165005			
	1	Plug, DIN, Kv 75		9613158809			
	1	Plug, DIN, Kv 9		9613165011			
	1	Plug, DIN, Kv 30		9613165012			
	1	Plug, DIN, Kv 51		9613165013			
	1	Plug, ISO, Kv 107			9613158804		
	1	Plug, ISO, Kv 26			9613165007		
	1	Plug, DIN, Kv 107			9613158810		
	1	Plug, DIN, Kv 26			9613165015		
	1	Plug, ISO, Kv 172				9613158805	
	1	Plug, ISO, Kv 101				9613165008	
	1	Plug, ISO, Kv 59				9613167001	
	1	Plug, DIN, Kv 172				9613158811	
	1	Plug, DIN, Kv 101				9613165016	
	1	Plug, DIN, Kv 59				9613167004	
	1	Plug, ISO, Kv 250					9613158806
	1	Plug, ISO, Kv 125					9613167002
	1	Plug , ISO, Kv 164					9613167003
	1	Plug, DIN, Kv 250					9613158812
	1	Plug, DIN, Kv 125					9613167005
	1	Plug, DIN, Kv 164					9613167006
23.2▲	1	Plug seal , EPDM (std)					
▲	1	Plug seal , HNBR					
▲	1	Plug seal , FPM					
		Plug seal, set (10 pcs.) EPDM	9614059404	9614059407	9614059410	9614059413	9614059416
		Plug seal, set (10 pcs.) HNBR	9614059405	9614059408	9614059411	9614059414	9614059417
		Plug seal, set (10 pcs.) FPM	9614059406	9614059409	9614059412	9614059415	9614059418

		DN40 38 mm	DN50 /51 mm	DN65 63.5mm	DN80 76.1 mm	DN100 101.6 mm
Recommended spare parts: Service kits.						
•	**Service kit, actuator**	**9611926737**	**9611926737**	**9611926737**	**9611926737**	**9611926737**
▲	**Service kit, EPDM**	**9611926502**	**9611926503**	**9611926504**	**9611926505**	**9611926506**
▲	**Service kit, HNBR**	**9611926508**	**9611926509**	**9611926510**	**9611926511**	**9611926512**
▲	**Service kit, FPM**	**9611926514**	**9611926515**	**9611926516**	**9611926517**	**9611926518**

Parts marked with • are included in the service kits (actuator)
Parts marked with are Δ included in the service kits (product wetted parts)

900460/2

1.8

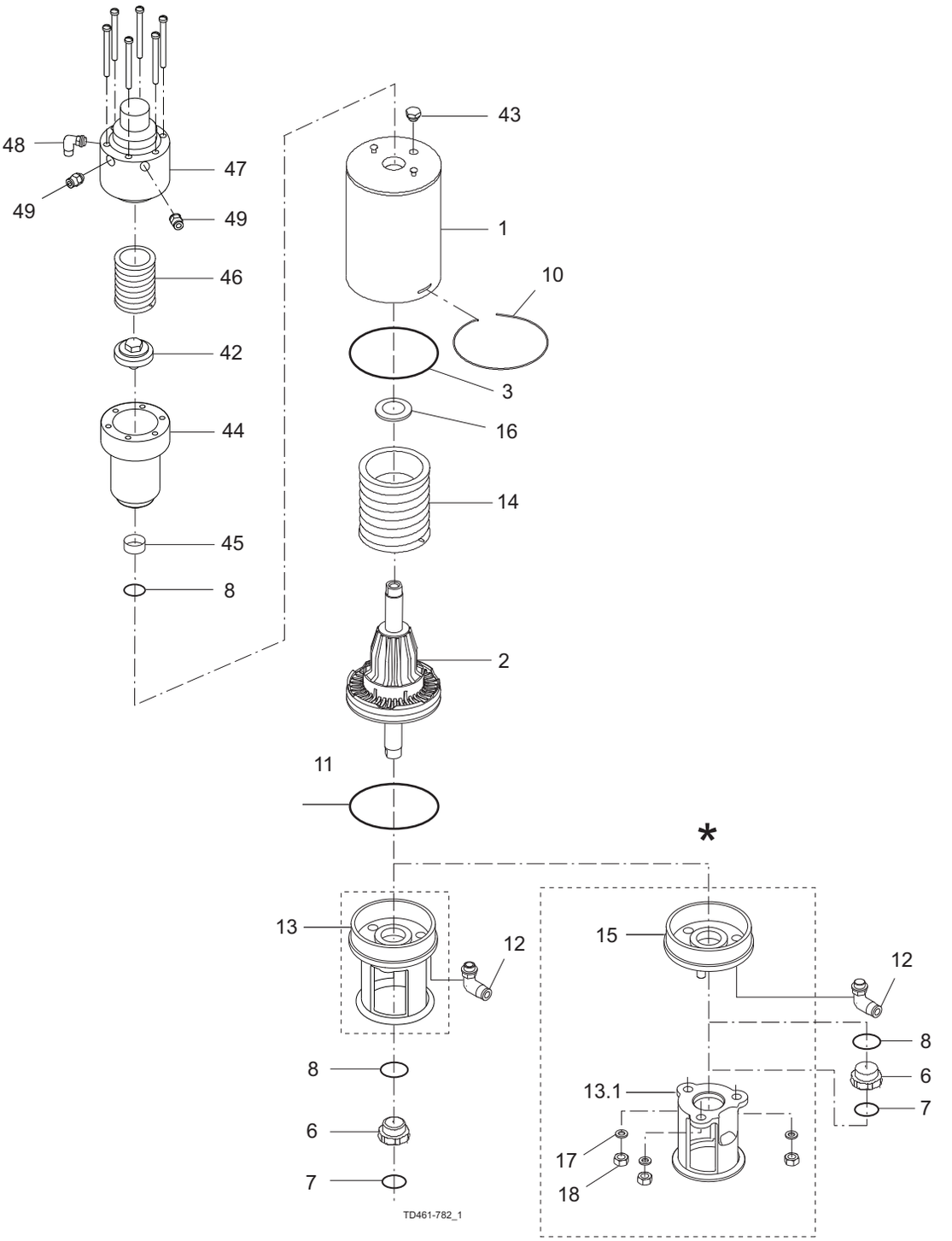
48
49
47
49
46
42
44
45
8
43
1
10
3
16
14
2
11
*
13
12
8
6
7
15
12
8
6
7
13.1
17
18
TD461-782_1

Pos		Qty	Denomination	DN40 38 mm	DN50 51 mm	DN65 63.5mm	DN80 76.1 mm	DN100 101.6 mm
			Actuator - complete, (NO)	9613185301	9613185302	9613185303	9613185304	9613185305
			Actuator - complete, (NC)	9613185306	9613185307	9613185308	9613185309	9613185310
1		1	Cylinder	9613142511	9613142512	9613142512	9613142513	9613142513
2		1	Piston	9613132201	9613132301	9613132301	9613132401	9613132401
3	•	1	O-ring					
5		1	Adapter	9614065301	9614065301	9614065301	9614065301	9614065301
6	•	1	Bushing					
7	•	1	O-ring					
8	•	2	O-ring					
9		1	Plug (NO+NC)	9613414101	9613414101	9613414101	9613414101	9613414101
10		1	Lock wire	9613143201	9613143202	9613143202	9613143203	9613143203
11	•	1	O-ring					
12		1	Air fitting (NC)	9611991988	9611991988	9611991988	9611991988	9611991988
13		1	Yoke	9613154301	96131544402	9613154502	9613154603	9613154703
14		1	Spring assembly	9613132501	9613132502	9613132502	9613132503	9613132503
16	•	1	Support disc					
42		1	Spring connection piece	9613435501	9613435502	9613435502	9613435503	9613435503
43		1	Plug (NO)	9611993709	9611993709	9611993709	9611993709	9611993709
44		1	Positioner yoke	9613435201	9613435201	9613435201	9613435201	9613435201
45	•	1	Guide ring					
46		1	Spring	9634075514	750392	750392	750998	750998
47		1	Positioner , NC	769499	769499	769499	769499	769499
		1	Positioner , NO	769498	769498	769498	769498	769498
48		1	Air fitting (NC)					
49		2	Air fitting (NC+NO)					
Removeable yoke with bolts - OBSOLETE - use position 13								
13.1		1	Yoke (- 0616)					
15		1	Bottom (- 0616)					
17		3	Washer (- 0616)					
18		3	Nut (- 0616)					

	DN40 38 mm	DN50 51 mm	DN65 63.5mm	DN80 76.1 mm	DN100 101.6 mm
Service Kits					
• **Service kit, Actuator**	**9611926740**	**9611926741**	**9611926741**	**9611926742**	**9611926742**

Parts marked with • are included in the service kits (actuator)
Recommended spare parts: Service kits

900-482/2

1.8

Not manufactured anymore

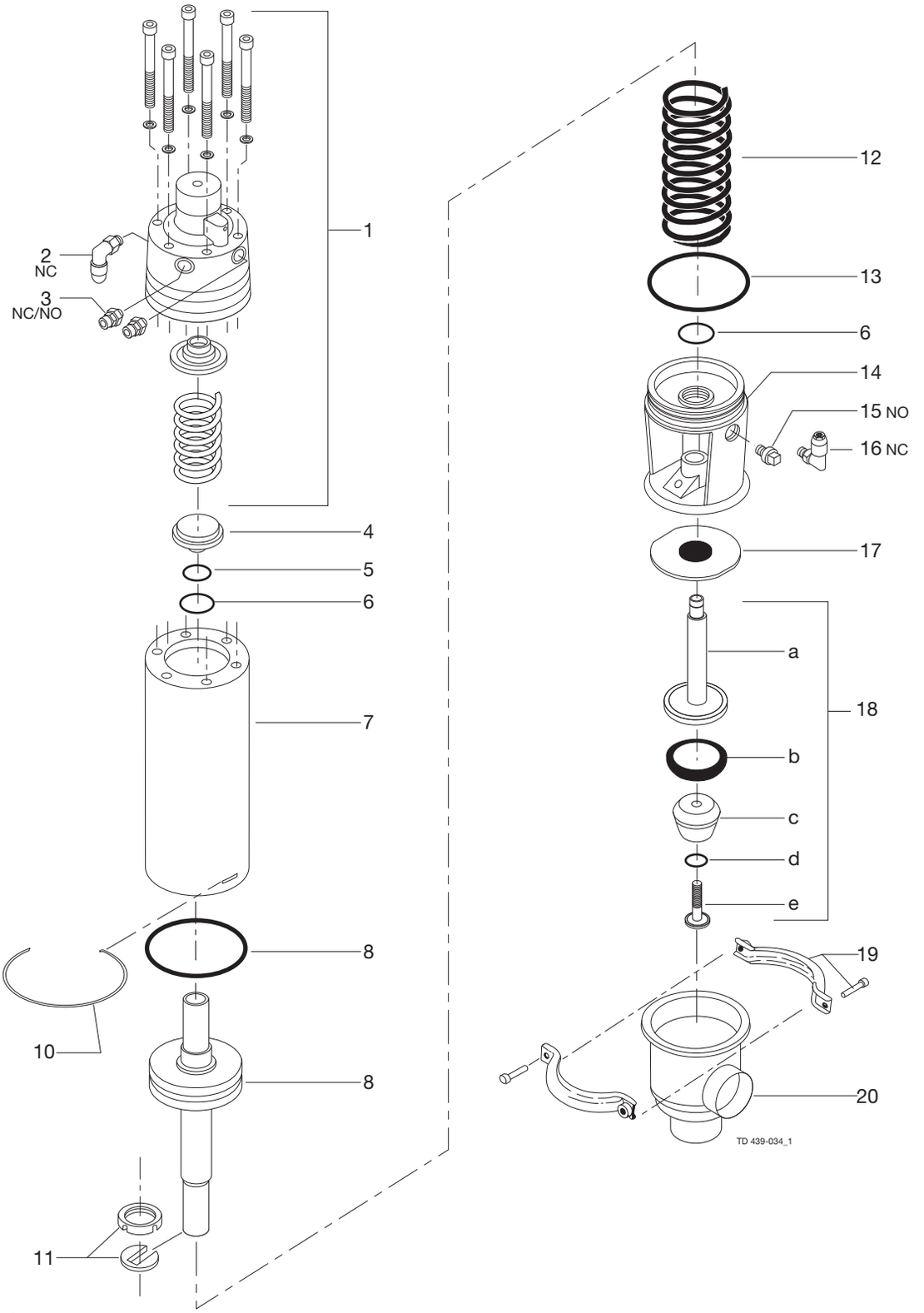

NO = Normally Open
NC = Normally Closed

Alternative Stem seal

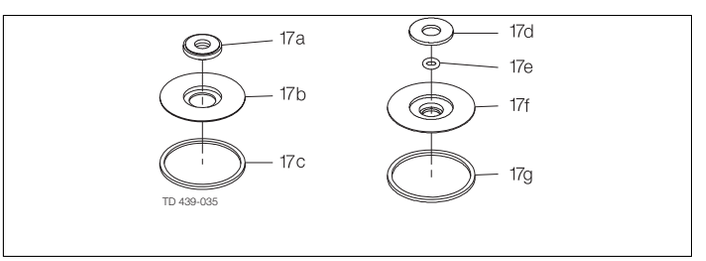

Special lip seal Parts for FEP lip seal

Pos		Qty	Denomination	38mm DN40	51mm DN50	63.5mm DN65	76.1mm	DN80	101.6mm DN100
			Actuator complete, NO						
			Actuator complete, NC						
1		1	Valve positioner, NO						
		1	Valve positioner, NC	3135311511	3135311511	3135311511	3135311511	3135311511	3135311511
2		1	Air fitting NC	9611993068	9611993068	9611993068	9611993068	9611993068	9611993068
3		2	Air fitting NO/NC	9611993069	9611993069	9611993069	9611993069	9611993069	9611993069
4		1	Spring support						
5	□	1	O-ring	9611990038	9611990038	9611990038	9611990038	9611990038	9611990038
6	□	2	O-ring	22340625	22340625	22340625	22340649	22340649	22340649
7		1	Cylinder						
8	□	1	O-ring	22340174	22340174	22340174	22340175	22340175	22340175
9		1	Piston	3135306211	3135306211	3135306211	3135306191	3135306191	3135306191
10	□	1	Lock wire	3135301511	3135301511	3135301511	3135301891	3135301891	3135301891
11	□	1	Clip complete	3135307931	3135307931	3135307931	3135307932	3135307932	3135307932
12		1	Spring assembly	3135306251	3135306251	3135306251	3135306221	3135306221	3135306221
13	□	1	O-ring	9611990396	9611990396	9611990396	22340617	22340617	22340617
14		1	Bonnet	3135301331	3135301331	3135301331	3135301901	3135301901	3135301901
15		1	Prop NO						
16		1	Air fitting NC	9611991988	9611991988	9611991988	9611991988	9611991988	9611991988

Pos		Qty	Denomination	38mm DN40	51mm DN50	63.5mm DN65	76.1mm	DN80	101.6mm DN100
17	♦	1	Lip seal, EPDM	3135301551	3135301551	3135301551	3135301881	3135301881	3135301881
		1	Lip seal, NBR	3135301552	3135301552	3135301552	3135301882	3135301882	3135301882
		1	Lip seal, FPM	3135301553	3135301553	3135301553	3135301883	3135301883	3135301883
18		1	Plug complete, EPDM				3135305231	3135305234	
		1	Plug complete, NBR	3135305202				3135305235	3135305242
		1	Plug complete, FPM	3135305203			3135305233	3135305236	3135305243
18a		1	Plug	3135303401	3135303771	3135303781	3135303411	3135303412	3135303791
18b	♦○	1	Seal, EPDM	3135303201	3135303211	3135303221	3135303241	9612095001	3135303251
		1	Seal, NBR	3135303202	3135303212	3135303222	3135303242	9612095002	3135303252
		1	Seal, FPM	3135303203	3135303213	3135303223	3135303243	9612095003	3135303253
		1	Packing PTFE	3135312111	3135312121	3135312131	3135312141	3135312251	3135312151
18c		1	Plug head	3135305151	3135305161				
18d	♦○	1	O-ring, EPDM	99003401	99003401	99003401	99003401	99003401	99003401
		1	O-ring, NBR	22340421	22340421	22340421	22340421	22340421	22340421
		1	O-ring, FPM	22340435	22340435	22340435	22340435	22340435	22340435
		1	Seal-ring PTFE	9612433001	9612433001	9612433001	9612433001	9612433001	9612433001
18e		1	Screw	3135305141	3135305141	3135305141	3135305141	3135305141	3135305141
Clamp									
19		1	Clamp complete	3132000273	3132000273	3132000273	3132000275	3132000275	3132000275
Valve body									
20		1	Valve body, ISO	3135303751	3135303761	3135303801	3135303811		3135300261
		1	Valve body, DIN		9612094101	9612094201		9612094301	9612094401
Alternative for 38 mm plug									
18c		1	Plug head Kv 17	3135305321					
18e		1	Screw Kv 17	3135305142					

Pos		Qty	Denomination	38mm DN40	51mm DN50	63.5mm DN65	76.1mm	DN80	101.6mm DN100
Valve Body with 0.8 RA finish inside									
10		1	Valve body, ISO	3135303752		3135303802			
		1	Valve body, DIN	9612094003					
Valve Plug with 0.8 RA									
		1	Plug complete, EPDM	3135311121		3135311141	3135311151	3135311154	3135311161
		1	Plug complete, NBR	3135311122	3135311132	3135311142	3135311152	3135311155	3135311162
		1	Plug complete, FPM	3135311123	3135311133	3135311143	3135311153	3135311156	3135311163
18a		1	Plug	3135310071		3135310073	3135310074	3135310078	
18c		1	Plug head	3135311231		3135311251	3135311261	9612098502	3135311271
18e		1	Screw	3135311221	3135311221	3135311221	3135311221	3135311221	3135311221
Alternative for 38 mm plug with 0.8 RA									
18c		1	Plug head	3135311341					
18e		1	Screw	3135311222					

1.8

Not manufactured anymore

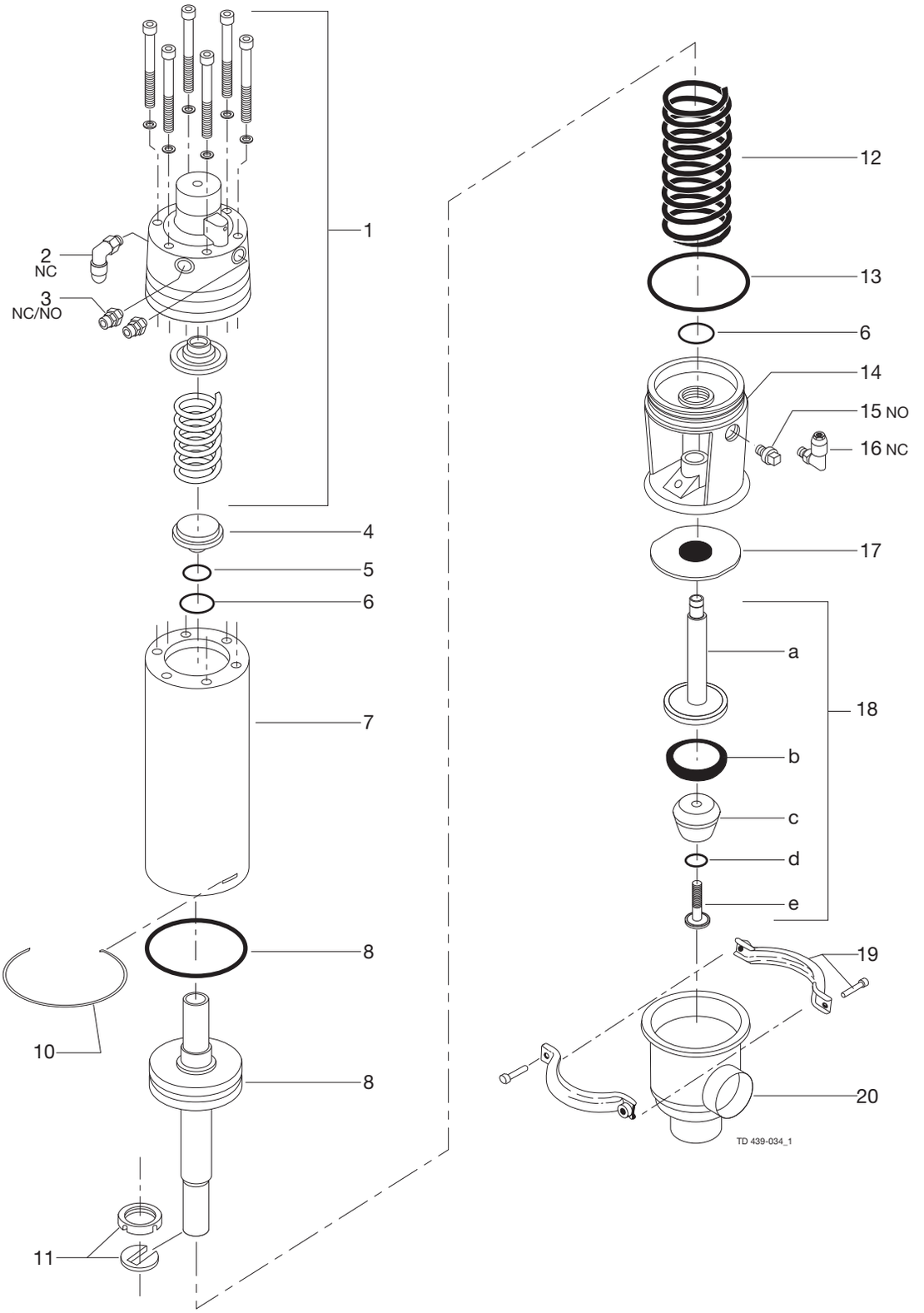

NO = Normally Open
NC = Normally Closed

Alternative Stem seal

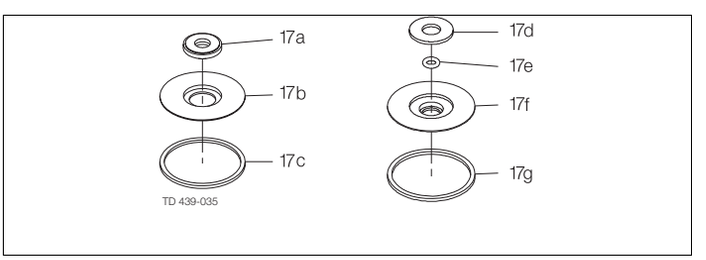

Special lip seal

Parts for FEP lip seal

Alternatives

Pos	Qty	Denomination	38mm DN40	51mm DN50	63.5mm DN65	76.1mm	DN80	101.6mm DN100
Stem seal								
17	1	Lip seal kit, EPDM (standard)	9611920078	9611920078	9611920078	9611920142	9611920142	9611920142
	1	Lip seal kit, NBR	9611920079	9611920079	9611920079	9611920143	9611920143	9611920143
	1	Lip seal kit, FPM	9611920080	9611920080	9611920080	9611920144	9611920144	9611920144
17a ○	1	Lip seal, EPDM	9612280601	9612280601	9612280601	9612308801	9612308801	9612308801
	1	Lip seal, NBR	9612280602	9612280602	9612280602	9612308802	9612308802	9612308802
	1	Lip seal, FPM	9612280603	9612280603	9612280603	9612308803	9612308803	9612308803
17b	1	Plate	9612280501	9612280501	9612280501	9612308701	9612308701	9612308701
17c ○	1	Seal ring, EPDM	3135301281	3135301281	3135301281	3135302051	3135302051	3135302051
	1	Seal ring, NBR	3135301282	3135301282	3135301282	3135302052	3135302052	3135302052
	1	Seal ring, FPM	3135301283	3135301283	3135301283	3135302053	3135302053	3135302053
Stem seal								
17d	1	Washer	3135304521	3135304521	3135304521	3135304522	3135304522	3135304522
17e ○	1	O-ring FEP/Silicone	9611992909	9611992909	9611992909	9611992910	9611992910	9611992910
17f	1	Holder	3135304531	3135304531	3135304531	3135304541	3135304541	3135304541
17g ○	1	Valve body packing	3135304511	3135304511	3135304511	3135304512	3135304512	3135304512

		38mm DN40	51mm DN50	63.5mm DN65	76.1mm	DN80	101.6mm DN100
Service Kit for Actuator							
□	Service Kit	9611920300	9611920300	9611920300	9611920319	9611920319	9611920319
Service Kit for Product wetted parts, standard							
♦	Service kit EPDM	9611920010	9611920013	9611920016	9611920019	9611920105	9611920022
♦	Service kit NBR	9611920011	9611920014	9611920017	9611920020	9611920106	9611920023
♦	Service kit FPM	9611920012	9611920015	9611920018	9611920021	9611920107	9611920024
Service Kit for Special Lip Seal							
○	Service kit EPDM	9611920447	9611920451	9611920455	9611920459	9611920463	9611920467
○	Service kit NBR	9611920448	9611920452	9611920456	9611920460	9611920464	9611920468
○	Service kit FPM	9611920449	9611920453	9611920457	9611920461	9611920465	9611920469
○	Service kit FEP	9611920450	9611920454	9611920458	9611920462	9611920466	9611920470

Parts marked with □♦○ are included in the service kits.

Recommended spare parts: Service kits.

900-101/1

Not manufactured anymore

1.8

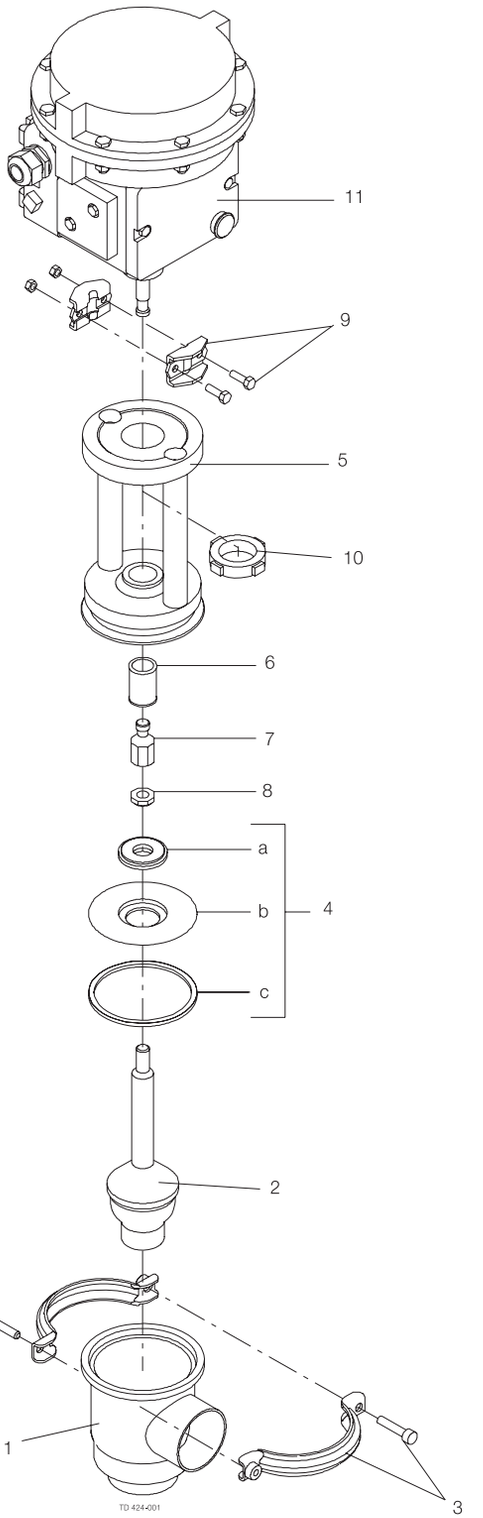

Parts for PTFE/FEP seal
Alternative Stem seal 2

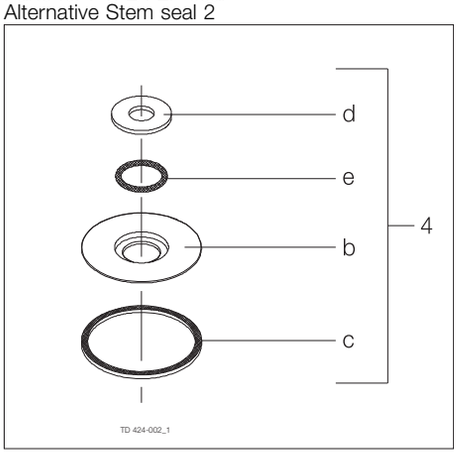

Pos		Qty	Denomination	38 mm DN40	51 mm DN50	63.5 mm DN65	76.1 mm DN80	101.6 mm DN100
1		1	Valve body, Kv 0.5 ISO	9612115501				
		1	Valve body, Kv 0.5 DIN	9612118001				
		1	Valve body, Kv 1 ISO	9612115502				
		1	Valve body, Kv 1 DIN	9612118002				
		1	Valve body, Kv 2 ISO	9612115503				
		1	Valve body, Kv 2 DIN	9612118003				
		1	Valve body, Kv 4 ISO	9612115504				
		1	Valve body, Kv 4 DIN	9612118004				
		1	Valve body, Kv 8 ISO	9612115505				
		1	Valve body, Kv 8 DIN	9612118005				
		1	Valve body, Kv 16 ISO	9612115506				
		1	Valve body, Kv 16 DIN	9612118006				
		1	Valve body, Kv 32 ISO		9612115601			
		1	Valve body, Kv 32 DIN		9612118101			
		1	Valve body, Kv 64 ISO			9612115701		
		1	Valve body, Kv 64 DIN			9612118201		
		1	Valve body, Kv 75 ISO				9612115804	
		1	Valve body, Kv 75 DIN				9612118302	
		1	Valve body, Kv 101 ISO					9612115904
		1	Valve body, Kv 101 DIN					9612118402
2		1	Plug, Kv 0.5 ISO/DIN	9612528201				
		1	Plug, Kv 1 ISO/DIN	9612528301				
		1	Plug, Kv 2 ISO/DIN	9612528401				
		1	Plug, Kv 4 ISO/DIN	9612528501				
		1	Plug, Kv 8 ISO/DIN	9612528601				
		1	Plug, Kv 16 ISO/DIN	9612528701				
		1	Plug, Kv 32 ISO/DIN		9612528801			
		1	Plug, Kv 64 ISO/DIN			9612528901		
		1	Plug, Kv 75 ISO				9612528901	
		1	Plug, Kv 75 DIN				9612528902	
		1	Plug, (Period 0610-) Kv 110 ISO/DIN					9613429001
		1	Plug, NO (Period 9708-0610) Kv 110 ISO/DIN					9613429002
		1	Plug, NC (Period 9708-0610) Kv 110 ISO/DIN					9613429003
3		1	Clamp, complete	3132000273	3132000273	3132000275	3132000275	3132000275
4		1	Lip seal kit, EPDM (standard)	9611920078	9611920078	9611920142	9611920142	9611920142
		1	Lip seal kit, NBR	9611920079	9611920079	9611920143	9611920143	9611920143
		1	Lip seal kit, FPM	9611920080	9611920080	9611920144	9611920144	9611920144
		1	Lip seal kit, PTFE/FEP	9611920445	9611920445	9611920446	9611920446	9611920446
4a	□	1	Lip seal, EPDM	9612280601	9612280601	9612308801	9612308801	9612308801
		1	Lip seal, NBR	9612280602	9612280602	9612308802	9612308802	9612308802
		1	Lip seal, FPM	9612280603	9612280603	9612308803	9612308803	9612308803
4b		1	Plate	9612280501	9612280501	9612308701	9612308701	9612308701
		1	Plate, for FEP seal	3135304531	3135304531	3135304541	3135304541	3135304541
4c	□	1	Seal ring, EPDM	3135301281	3135301281	3135302051	3135302051	3135302051
		1	Seal ring, NBR	3135301282	3135301282	3135302052	3135302052	3135302052
		1	Seal ring, FPM	3135301283	3135301283	3135302053	3135302053	3135302053
		1	Seal ring, PTFE	3135304511	3135304511	3135304512	3135304512	3135304512
4d		1	Washer	3135304521	3135304521	3135304522	3135304522	3135304522
4e	□	1	O-ring, FEP	9611992909	9611992909	9611992910	9611992910	9611992910
5		1	Bonnet complete	9612533101	9612533101	9612533102	9612533102	9612533102
6	□	1	Guide ring	9612358601	9612358601	9612358604	9612358604	9612358604
7		1	Valve plug adjuster	9612534001	9612534001	9612534001	9612534001	
		1	Valve plug adjuster, NO (Thread:M20) (Period 0610-)					9613428901
		1	Valve plug adjuster, NC (Thread:M20) (Period 0610-)					9613431301
		1	Valve plug adjuster, NO (Thread:M10) (Period 9708-0610)					9612534001
		1	Valve plug adjuster, NC (Thread:M10) (Period 9708-0610)					9612534002
8		1	Lock nut, (Thread:M10)	9612534101	9612534101	9612534101	9612534101	
		1	Lock nut, (Thread:M20) (Period 0610-)					9611994727
		1	Lock nut, (Thread:M10) (Period 9708-0610)					9612534101
9		1	Clamp fitting	9612534201	9612534201	9612534201	9612534201	
		1	Clamp fitting, NO					9612534201
		1	Clamp fitting, NC					9612534202
10		1	Striking nut	9612533901	9612533901	9612533901	9612533901	9612533901
11		1	Actuator complete, NO pos. type 3760	9612533601	9612533601	9612533601	9612533601	9612533601
		1	Actuator complete, NC pos. type 3760	9612533602	9612533602	9612533602	9612533602	9612533603
		1	Actuator complete, NO pos. type 3730-2	9612533606	9612533606	9612533606	9612533606	9612533606

Not manufactured anymore

1.8

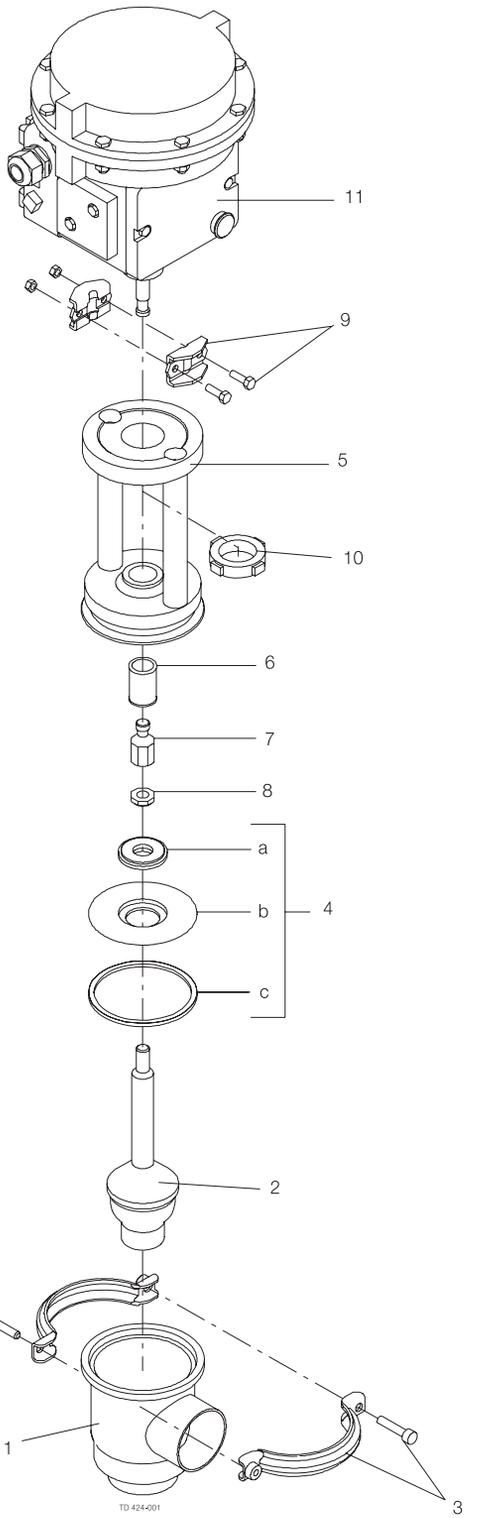

Parts for PTFE/FEP seal
Alternative Stem seal 2

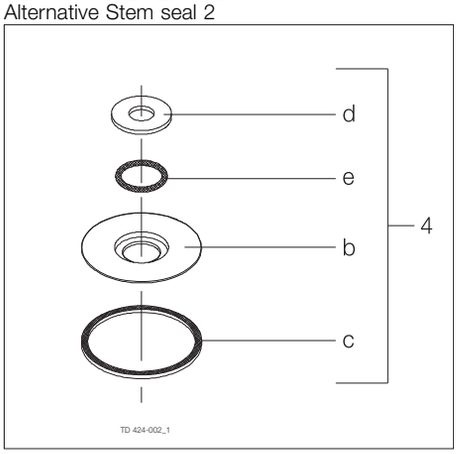

	38 mm DN40	51 mm DN50	63.5 mm DN65	76.1 mm DN80	101.6 mm DN100
Service kit for Product wetted parts					
Service kit EPDM	9611920419	9611920419	9611920423	9611920423	9611920423
Service kit NBR	9611920420	9611920420	9611920424	9611920424	9611920424
Service kit FPM	9611920421	9611920421	9611920425	9611920425	9611920425
Service kit PTFE/FEP	9611920422	9611920422	9611920426	9611920426	9611920426

Parts marked with □ are included in the Service kits.

Recommended Spare Parts: Service kits.

TD 900-402/2

Not manufactured anymore

1.8

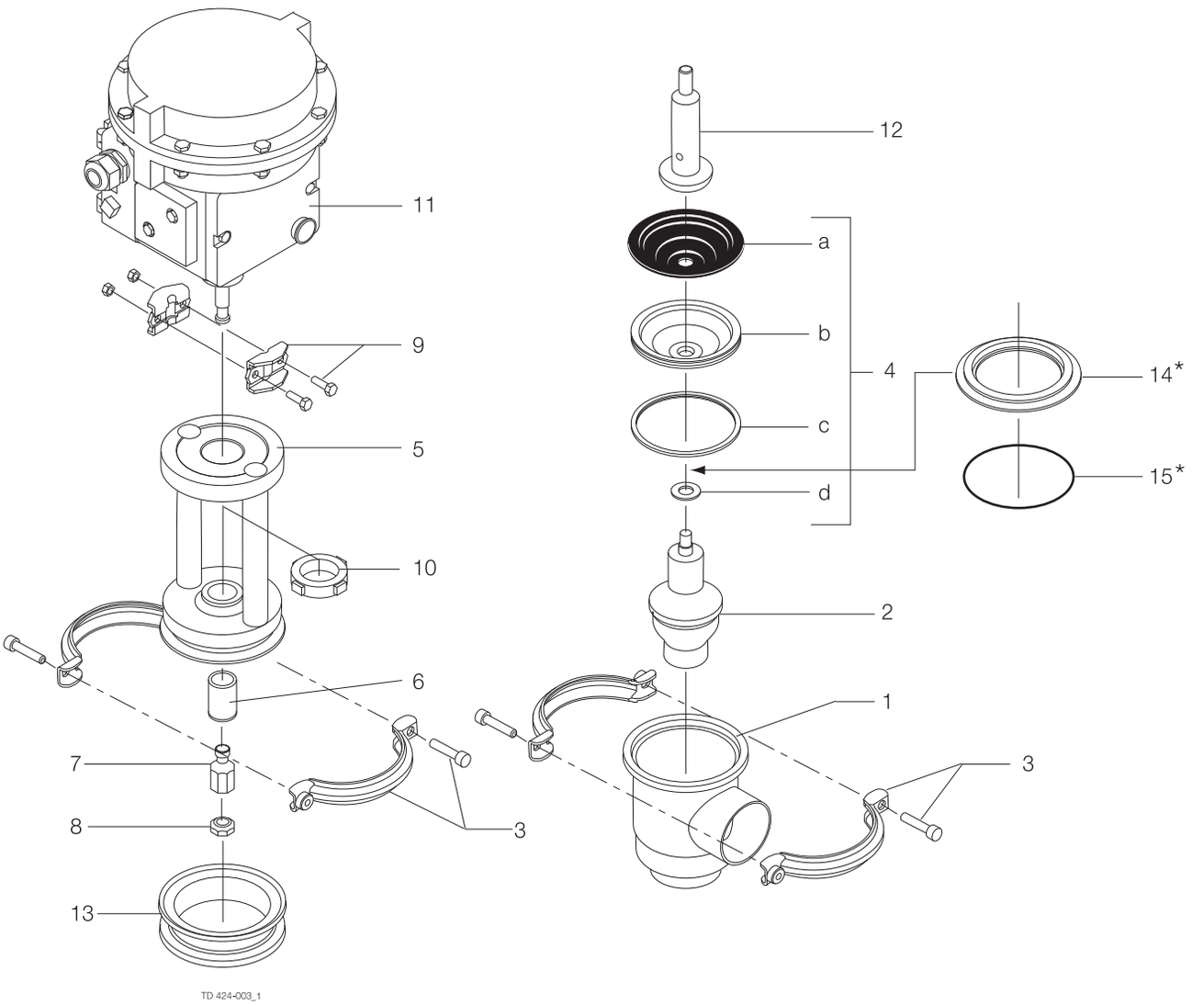

* = only for 63.5-76.1mm/DN65/80

Pos		Qty	Denomination	38 mm DN40	51 mm DN50	63.5 mm DN65	76.1 mm DN80
1		1	Valve body, Kv 0.5 ISO	9612115501			
		1	Valve body, Kv 0.5 DIN	9612118001			
		1	Valve body, Kv 1 ISO	9612115502			
		1	Valve body, Kv 1 DIN	9612118002			
		1	Valve body, Kv 2 ISO	9612115503			
		1	Valve body, Kv 2 DIN	9612118003			
		1	Valve body, Kv 4 ISO	9612115504			
		1	Valve body, Kv 4 DIN	9612118004			
		1	Valve body, Kv 8 ISO	9612115505			
		1	Valve body, Kv 8 DIN	9612118005			
		1	Valve body, Kv 16 ISO	9612115506			
		1	Valve body, Kv 16 DIN	9612118006			
		1	Valve body, Kv 32 ISO		9612115601		
		1	Valve body, Kv 32 DIN		9612118101		
		1	Valve body, Kv 64 ISO			9612115701	
		1	Valve body, Kv 64 DIN			9612118201	
		1	Valve body, Kv 75 ISO				9612115804
		1	Valve body, Kv 75 DIN				9612118302
		1	Valve body, Kv 101 ISO				
		1	Valve body, Kv 101 DIN				
2		1	Plug, Kv 0.5 ISO	9612118701			
		1	Plug, Kv 0.5 DIN	9612118701			
		1	Plug, Kv 1 ISO	9612118801			
		1	Plug, Kv 1 DIN	9612118801			
		1	Plug, Kv 2 ISO	9612118901			
		1	Plug, Kv 2 DIN	9612118901			
		1	Plug, Kv 4 ISO	9612119001			
		1	Plug, Kv 4 DIN	9612119001			
		1	Plug, Kv 8 ISO	9612119101			
		1	Plug, Kv 8 DIN	9612119101			
		1	Plug, Kv 16 ISO	9612119201			
		1	Plug, Kv 16 DIN	9612119201			
		1	Plug, Kv 32 ISO		9612119401		
		1	Plug, Kv 32 DIN		9612119401		
		1	Plug, Kv 64 ISO			9612119601	
		1	Plug, Kv 64 DIN			9612119601	
		1	Plug, Kv 75 ISO				9612119601
		1	Plug, Kv 75 DIN				
		1	Plug, Kv 110 ISO				
		1	Plug, Kv 110 DIN				
3		2	Clamp complete	3132000273	3132000273	3132000275	3132000275
4		1	Diaphragm set, PTFE/EPDM (complete replacement recommended)	9611920001	9611920001	9611920007	9611920007
		1	Diaphragm set, PTFE/NBR	9611920081	9611920081	9611920083	9611920083
		1	Diaphragm set, PTFE/FPM	9611920082	9611920082	9611920084	9611920084
4a	□	1	Diaphragm support,EPDM	3135308161	3135308161	3135308162	3135308162
4b	□	1	Diaphragm PTFE	3135308201	3135308201	3135308202	3135308202
4c	□	1	L-seal, EPDM (standard)	3135308171	3135308171	3135308171	3135308171
		1	L-seal, NBR	3135308172	3135308172	3135308172	3135308172
		1	L-seal, FPM	3135308173	3135308173	3135308173	3135308173
4d	□	1	Stem seal, EPDM (standard)	3135308181	3135308181	3135308182	3135308182
		1	Stem seal, NBR	3135308183	3135308183	3135308184	3135308184
		1	Stem seal, FPM	3135308185	3135308185	3135308186	3135308186
5		1	Bonnet komplete	9612533101	9612533101	9612533102	9612533102
6	□	1	Guide ring	9612358601	9612358601	9612358604	9612358604
7		1	Valve plug adjuster	9612534001	9612534001	9612534001	9612534001
8		1	Lock nut	9612534101	9612534101	9612534101	9612534101
9		1	Clamp fitting	9612534201	9612534201	9612534201	9612534201
10		1	Striking nut	9612533901	9612533901	9612533901	9612533901
11		1	Actuator komplete, NO	9612533601	9612533601	9612533601	9612533601
		1	Actuator komplete, NC	9612533602	9612533602	9612533602	9612533602
12		1	Stem, upper	9612527401	9612527401	9612527501	9612527501
13		1	Intermediate piece	3135308133	3135308133	3135308403	3135308403
14		1	Diaphragm ring			3135308411	3135308411
15	□	1	Seal ring, EPDM (standard)			3135302051	3135302051
		1	Seal ring, NBR			3135302052	3135302052
		1	Seal ring, FPM			3135302053	3135302053

1.8

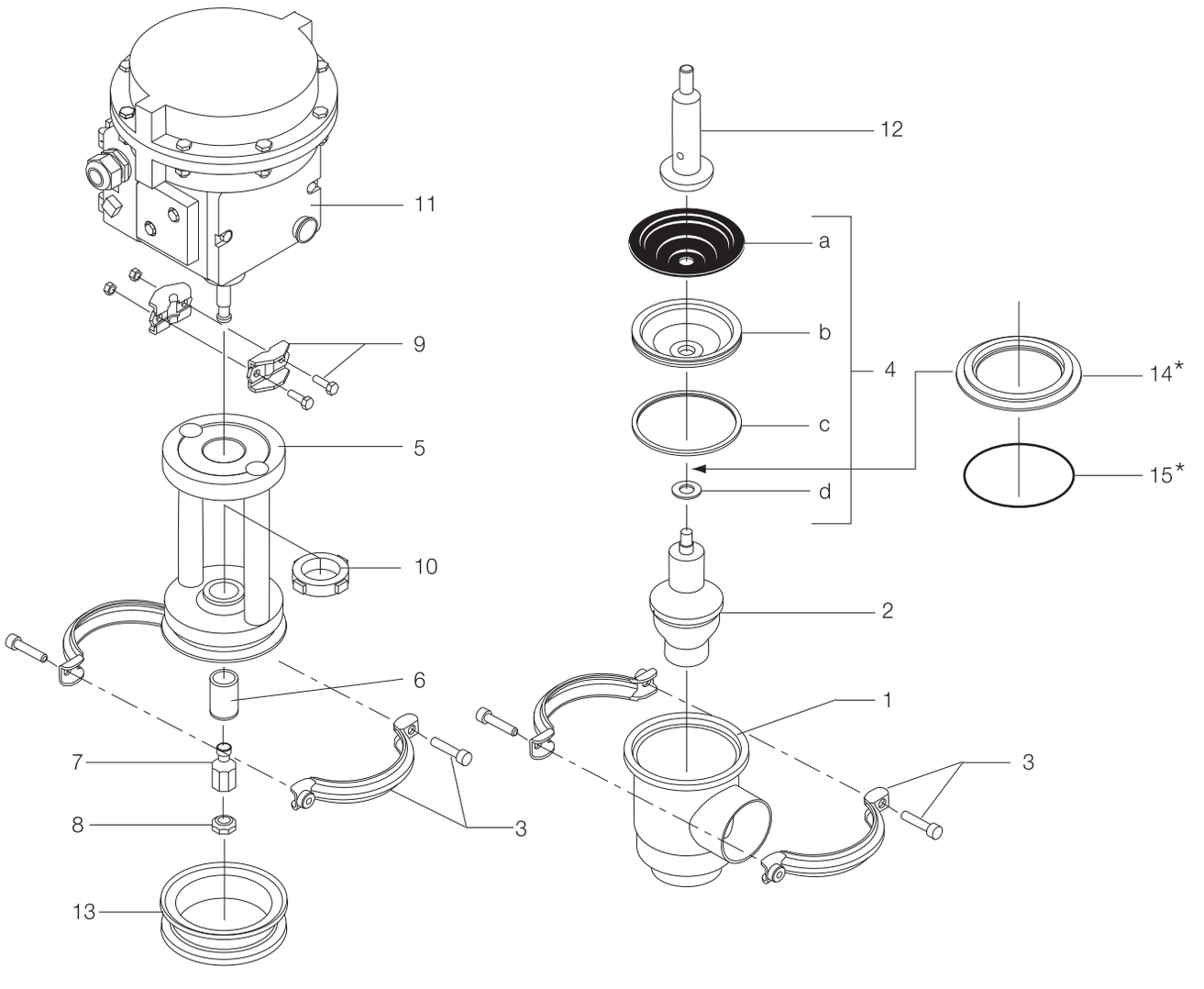

* = only for 63.5-76.1mm/DN65/80

	38 - 51 mm DN40 - DN50	63.5 - 76.1 mm DN65 - DN80
Service kit for Product wetted parts		
Service kit EPDM	9611920427	9611926430
Service kit NBR	9611920428	9611926431
Service kit FPM	9611920429	9611926432

Parts marked with □ are included in the Service kits.

Recommended Spare Parts: Service kits.

TD 900-403/2

Not manufactured anymore

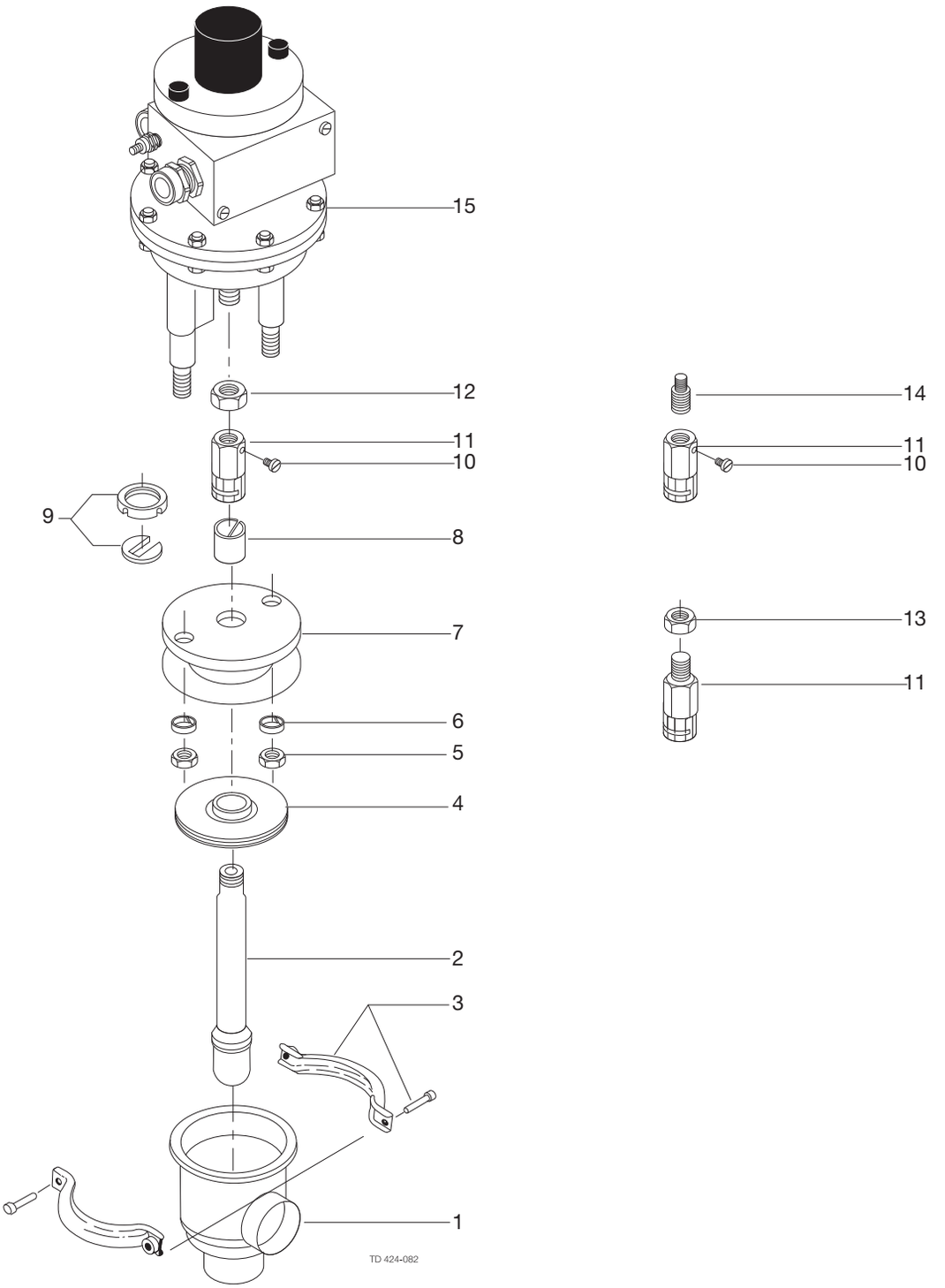

Pos		Qty	Denomination	38 mm NW40	51 mm NW50	63.5 mm NW65	76 mm NW80	101.6 mm NW100
1		1	Valve body, Kv 0.5, ISO	9612115501				
		1	Valve body, Kv 0.5, DIN	9612118001				
		1	Valve body, Kv 1, ISO	9612115502				
		1	Valve body, Kv 1, DIN	9612118002				
		1	Valve body, Kv 2, ISO	9612115503				
		1	Valve body, Kv 2, DIN	9612118003				
		1	Valve body, Kv 4, ISO	9612115504				
		1	Valve body, Kv 4, DIN	9612118004				
		1	Valve body, Kv 8, ISO	9612115505				
		1	Valve body, Kv 8, DIN	9612118005				
		1	Valve body, Kv 16, ISO	9612115506				
		1	Valve body, Kv 16, DIN	9612118006				
		1	Valve body, Kv 32, ISO		9612115601			
		1	Valve body, Kv 32, DIN		9612118101			
		1	Valve body, Kv 64L, ISO			9612115701		
		1	Valve body, Kv 64L, DIN			9612118201		
		1	Valve body, Kv 75L, ISO				9612115804	
		1	Valve body, Kv 75L, DIN				9612118302	
		1	Valve body, Kv 110L, ISO					9612115904
		1	Valve body, Kv 110L, DIN					9612118402
2		1	Plug, Kv 0.5	9612114401				
		1	Plug, Kv 1	9612114402				
		1	Plug, Kv 2	9612114403				
		1	Plug, Kv 4	9612114404				
		1	Plug, Kv 8	9612114405				
		1	Plug, Kv 16	9612114406				
		1	Plug, Kv 32		9612114408			
		1	Plug, Kv 64L			9612114410		
		1	Plug, Kv 75L (76.1 mm)				9612114410	
		1	Plug, Kv 75L (DN 80)				9612114417	
		1	Plug, Kv 110L					9612114416
3		1	Clamp complete	9611311054	9611311054	9611311055	9611311055	9611311055
4	▲	1	Lip seal, EPDM (standard)	3135301551	3135301551	3135301881	3135301881	3135301881
		1	Lip seal, NBR	3135301552	3135301552	3135301882	3135301882	3135301882
		1	Lip seal, FPM	3135301553	3135301553	3135301883	3135301883	3135301883
5		2	Nut, IP 37	9611990360	9611990360			
		3	Nut, IP 38			9611990353	9611990353	9611990353
6		2	Spring washer, IP 37	9611991888	9611991888			
		2	Spring washer, IP 38			9611991887	9611991887	9611991887
7		1	Bonnet					
8	▲	1	Guide ring	9611992510	9611992510	9611992528	9611992528	9611992528
9		1	Clip assembly	3135307931	3135307931	3135307931	3135307931	3135307931
10		1	Lock screw	9611992527	9611992527	9611992527	9611992527	9611992527
11		1	Adjustment piece, IP 37, NC					
		1	Adjustment piece, IP 37, NO					
		1	Adjustment piece, IP 38, NC					
		1	Adjustment piece, IP 38, NO					
12		1	Nut, IP 38, NO					
13		1	Nut, IP 38, NC					
14		1	Adaptor, IP 37, NC					
15		1	Actuator, (Std.), NO					
		1	Actuator (Kv 0.5-8 for 38 mm), (Std.), NC					
		1	Actuator (Kv 16-32), (Std.), NC					

	38 mm NW40	51 mm NW50	63.5 mm NW65	76 mm NW80	101.6 mm NW100
Service kits					
Service kit, EPDM	9611920121	9611920121	9611920122	9611920122	9611920122
Service kit, NBR	9611920123	9611920123	9611920124	9611920124	9611920124
Service kit, FPM	9611920125	9611920125	9611920126	9611920126	9611920126

Parts marked with ▲ are included in the Service kits.
Recommended Spare Parts: Service kits

TD900404/1

Not manufactured anymore

1.8

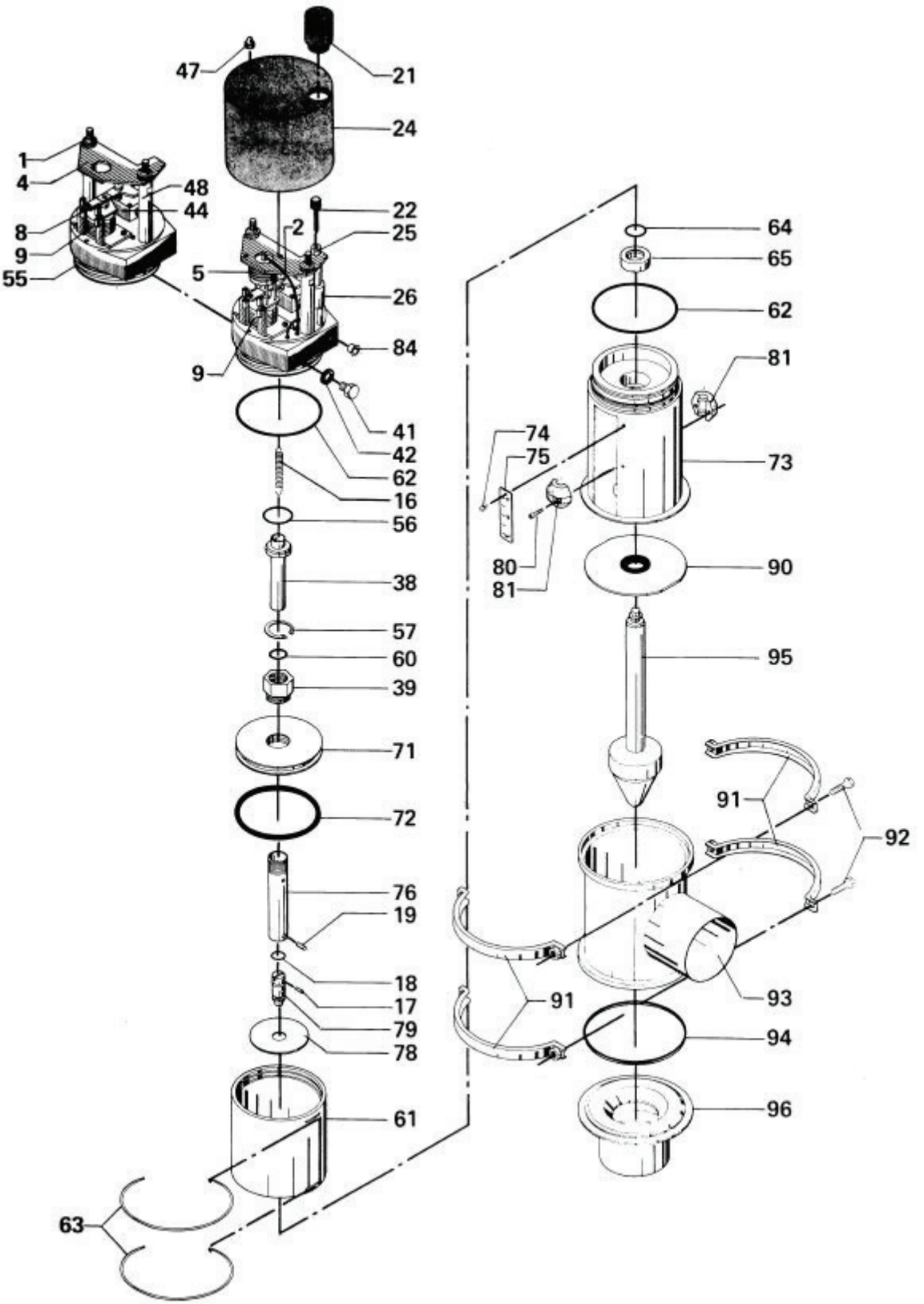

Pos	Qty	Denomination	SPC-P	SPC-L
		Actuator, compl. 38-63,5 mm		
		Actuator, compl. 76-101.6 mm		
1	2	Nut, knurled		
2	1	Rubber tube, (actuator end to upper bellows)		
4	1	Bracket for bellows and set, point valve		
5	1	Upper bellows		
8	1	Upper moment lever with flapper		
9	1	Lower bellows with moment lever		
16	1	Feedback spring		
17	1	Locking pin		
18	1	O-ring		
19	1	Locking pin		
21	1	Locking pin		
22	1	Knob with set screw		
24	1	Cover, large		
25	1	Lock nut		
26	1	Set point valve		
38	1	Inner tube		
39	1	Nut for piston		
41	5	Plug		
42	5	Packing		
44	1	Nozzle block		
47	2	Cap nut		
48	2	Stud bolt		
55	1	Upper actuator end		
56	1	O-ring	22340651	22340651
57	1	Lock ring		
60	1	X-ring		
61	1	Cylinder		
62	2	O-ring	22340669	22340669
63	2	Lock wire		
64	1	X-ring		
65	1	Insert		
71	1	Piston		
72	1	X-ring		
73	1	Bonnet, 38-63.5 mm		
	1	Bonnet, 76-101.6 mm		
74	2	Screw		
75	1	Scale		
76	1	Piston rod		
78	1	Indicator		
79	1	Piston-rod end		
80	2	Screw		
81	2	Clamp half		
84	1	Plug, DBI		

Not manufactured anymore

1.8

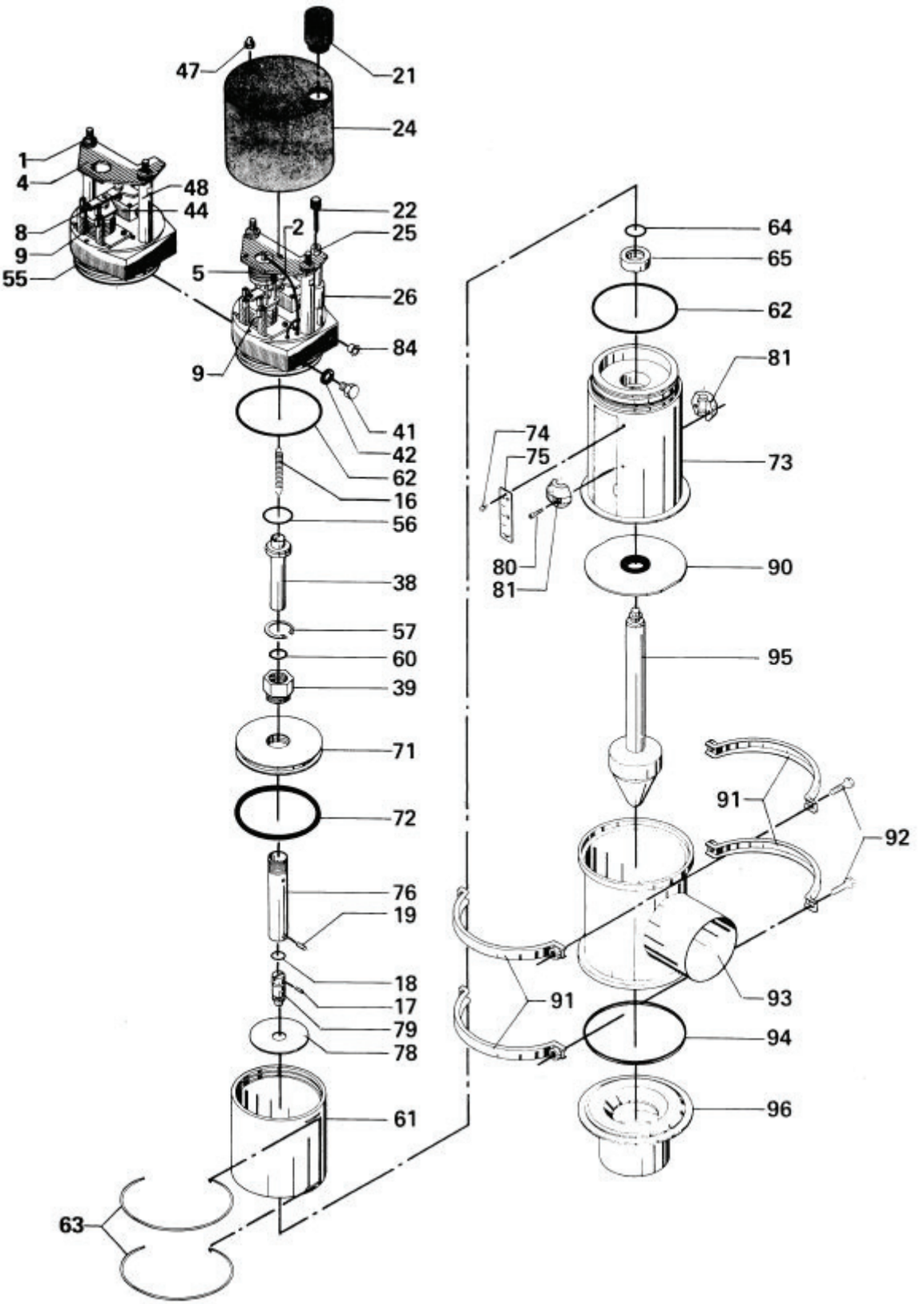

Pos	Qty	Denomination	38 mm	51 mm	63.5 mm	76 mm	101.6 mm
90	1	Lip seal, EPDM (std.)	3135301551	3135301551	3135301551	3135301881	3135301881
	1	Lip seal, NBR	3135301552	3135301552	3135301552	3135301882	3135301882
	1	Lip seal, FPM	3135301553	3135301553	3135301553	3135301883	3135301883
Clamp							
91+92	2	Clamp and screws (Period 9209-)	3132000273	3132000273	3132000273	3132000272	3132000272
Valve bodies							
93	1	Valve body (type W)					
94	1	Packing, EPDM (std.)	3135301281	3135301281	3135301281	3135302051	3135302051
	1	Packing, NBR	3135301282	3135301282	3135301282	3135302052	3135302052
	1	Packing, FPM	3135301283	3135301283	3135301283	3135302053	3135302053
Plug and Seat							
95	1	Plug, Kv 2,5					
	1	Plug, Kv 9					
	1	Plug, Kv 29					
	1	Plug, Kv 51					
	1	Plug, Kv 42					
	1	Plug, Kv 64					
	1	Plug, Kv 64					
	1	Plug, Kv 135					
96	1	Seat, Kv 2,5					
	1	Seat, Kv 9					
	1	Seat, Kv 29					
	1	Seat, Kv 51					
	1	Seat, Kv 42 and 64					
	1	Seat, Kv 64					
	1	Seat, Kv 135					

Not manufactured anymore

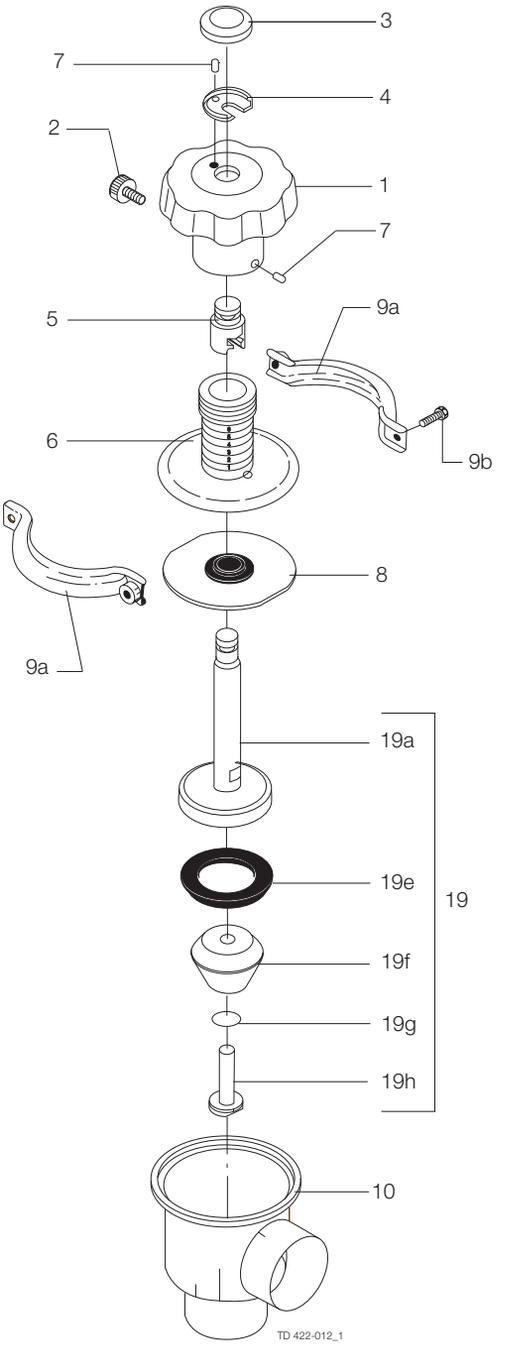

Alternatives stem seal

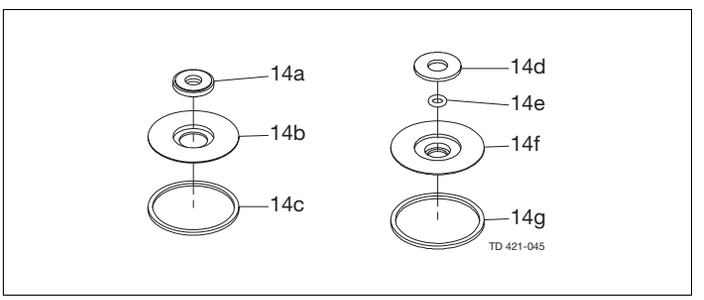

Special lip seal

Parts for FEP lip seal

Operating mechanism

Pos	Qty	Denomination	DN 40 38 mm	DN 50 51 mm	DN 65 63.5 mm	76 mm	DN 80	DN 100 101.6 mm
	1	Operating mechanism complete	3135305311	3135305311	3135305311	3135305312	3135305312	3135305312
1	1	Hand wheel	3135305281	3135305281	3135305281	3135305281	3135305281	3135305281
2	1	Lock screw	3135305291	3135305291	3135305291	3135305291	3135305291	3135305291
3	1	Cap	3135304681	3135304681	3135304681	3135304681	3135304681	3135304681
4	1	Washer	3135304671	3135304671	3135304671	3135304671	3135304671	3135304671
5	1	Stem holder	3135304661	3135304661	3135304661	3135304661	3135304661	3135304661
6	1	Guide	3135304591	3135304591	3135304591	3135304601	3135304601	3135304601
7	2	Set screw	22158192	22158192	22158192	22158192	22158192	22158192

Valve body part

Pos	Qty	Denomination	DN 40 38 mm	DN 50 51 mm	DN 65 63.5 mm	76 mm	DN 80	DN 100 101.6 mm
Stem seal								
8 □	1	Lip seal, EPDM						
	1	Lip seal, NBR						
	1	Lip seal, FPM						
Clamp								
9a+b	1	Clamps & screws (period 9209-)	3132000271	3132000271	3132000271	3132000272	3132000272	3132000272
9a	2	Clamp half (period -9209)						
9b	2	Screw (period -9209)						
Valve body								
10	1	Valve body, 2 ports ISO	3135303751	3135303761	3135303801	3135303811		3135300261
	1	Valve body, 2 ports DIN		9612094101	9612094201		9612094301	9612094401
Valve plug								
19	1	Plug complete, EPDM				3135305231	3135305234	
	1	Plug complete, NBR	3135305202				3135305235	3135305242
	1	Plug complete, FPM	3135305203			3135305233	3135305236	3135305243
	1	Plug complete, EPDM, Kv 17 (option)	3135305204					
19a	1	Stem	3135303401	3135303771	3135303781	3135303411	3135303412	3135303791
19e □◆	1	Plug seal, EPDM						
	1	Plug seal, NBR						
	1	Plug seal, FPM						
	1	Plug seal, PTFE						
19f	1	Regulating plug, Kv43	3135305151	3135305161				
	1	Regulating plug, Kv17-option	3135305321					
19g □◆	1	O-ring, EPDM						
	1	O-ring, NBR						
	1	O-ring, FPM						
	1	O-ring, PTFE						
19h	1	Screw	3135305141	3135305141	3135305141	3135305141	3135305141	3135305141
	1	Screw, 17Kv (option)	3135305142					

Not manufactured anymore

1.8

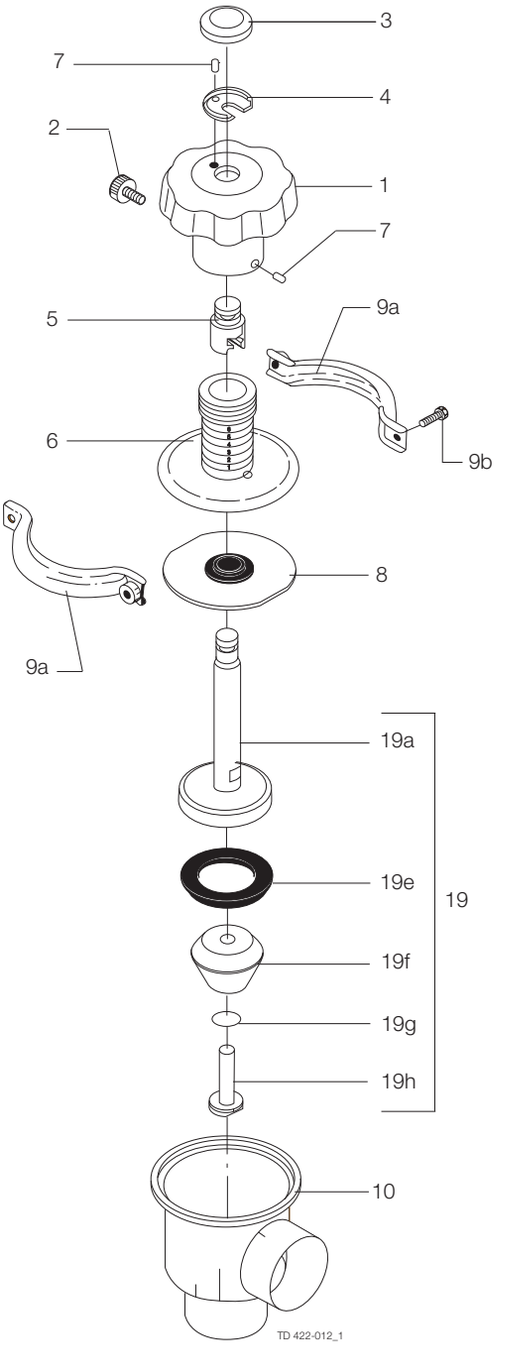

Alternatives stem seal

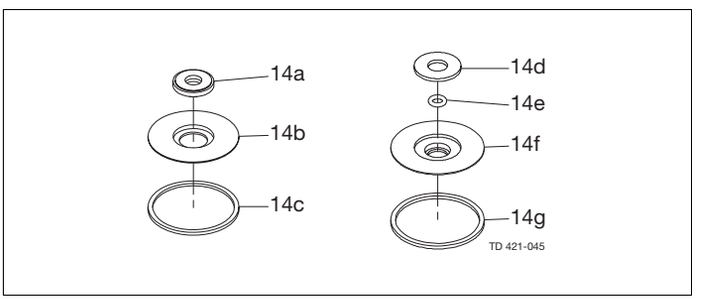

Special lip seal

Parts for FEP lip seal

Alternatives

Pos	Qty	Denomination	DN 40 38 mm	DN 50 51 mm	DN 65 63.5 mm	76 mm	DN 80	DN 100 101.6 mm
Stem seal								
14	1	Lip seal kit, EPDM (standard)	9611920078	9611920078	9611920078	9611920142	9611920142	9611920142
	1	Lip seal kit, NBR	9611920079	9611920079	9611920079	9611920143	9611920143	9611920143
	1	Lip seal kit, FPM	9611920080	9611920080	9611920080	9611920144	9611920144	9611920144
14a ♦	1	Lip seal, EPDM						
	1	Lip seal, NBR						
	1	Lip seal, FPM						
14b	1	Plate	9612280501	9612280501	9612280501	9612308701	9612308701	9612308701
14c ♦	1	Seal ring, EPDM						
	1	Seal ring, NBR						
	1	Seal ring, FPM						
Stem seal								
14d	1	Washer	3135304521	3135304521	3135304521	3135304522	3135304522	3135304522
14e ♦	1	O-ring FEP/Silicone						
14f	1	Holder	3135304531	3135304531	3135304531	3135304541	3135304541	3135304541
14g ♦	1	Seal ring, PTFE						

Pos	Qty	Denomination	DN 40 38 mm	DN 50 51 mm	DN 65 63.5 mm	76 mm	DN 80	DN 100 101.6 mm
Valve body with 0.8 RA finish inside								
10	1	Valve body, 2 ports ISO	3135303752		3135303802			
	1	Valve body, 2 ports DIN	9612094003					
Valve plug with 0.8 RA finish								
19	1	Plug complete, EPDM	3135311121		3135311141	3135311151	3135311154	3135311161
	1	Plug complete, NBR	3135311122	3135311132	3135311142	3135311152	3135311155	3135311162
	1	Plug complete, FPM	3135311123	3135311133	3135311143	3135311153	3135311156	3135311163
19a	1	Stem	3135310071		3135310073	3135310074	3135310078	
19f	1	Regulating plug	3135311231		3135311251	3135311261	9612098502	3135311271
19h	1	Screw	3135311221	3135311221	3135311221	3135311221	3135311221	3135311221

	DN 40 38 mm	DN 50 51 mm	DN 65 63.5 mm	76 mm	DN 80	DN 100 101.6 mm
Service kit for product wetted parts, standard						
□ Service Kit EPDM	9611920010	9611920013	9611920016	9611920019	9611920105	9611920022
□ Service Kit NBR	9611920011	9611920014	9611920017	9611920020	9611920106	9611920023
□ Service Kit FPM	9611920012	9611920015	9611920018	9611920021	9611920107	9611920024
Service kit for special lip seal						
♦ Service Kit EPDM	9611920447	9611920451	9611920455	9611920459	9611920463	9611920467
♦ Service Kit NBR	9611920448	9611920452	9611920456	9611920460	9611920464	9611920468
♦ Service Kit FPM	9611920449	9611920453	9611920457	9611920461	9611920465	9611920469
♦ Service Kit FEP	9611920450	9611920454	9611920458	9611920462	9611920466	9611920470

Parts marked with □♦ are included in the service kits.

Recommended spare parts: Pos. 3,7 and service kit.

900421/2

Not manufactured anymore

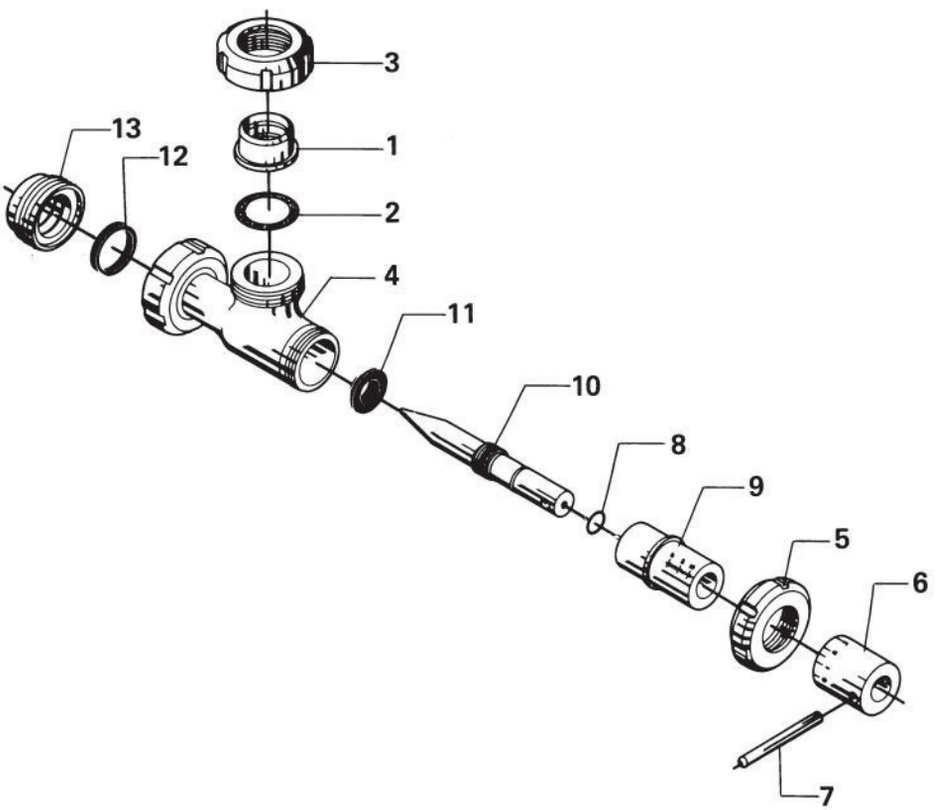

Pos	Qty	Denomination	3135100071
AISI 316			
1	1	Liner	190627
2	1	Seal (teflon)	
3	1	Nut	190613
4	1	Valve body	
5	1	Nut	
6	1	Hand-wheel	
7	1	Pin	
8	1	O-ring	
9	1	Guide spindle	
10	1	Valve spindle	
11	1	Lip seal	22353702
12	1	Seal (NBR)	190601
13	1	Male part	190641

Recommended spare parts: pos. 8, 11, 12.

Not manufactured anymore

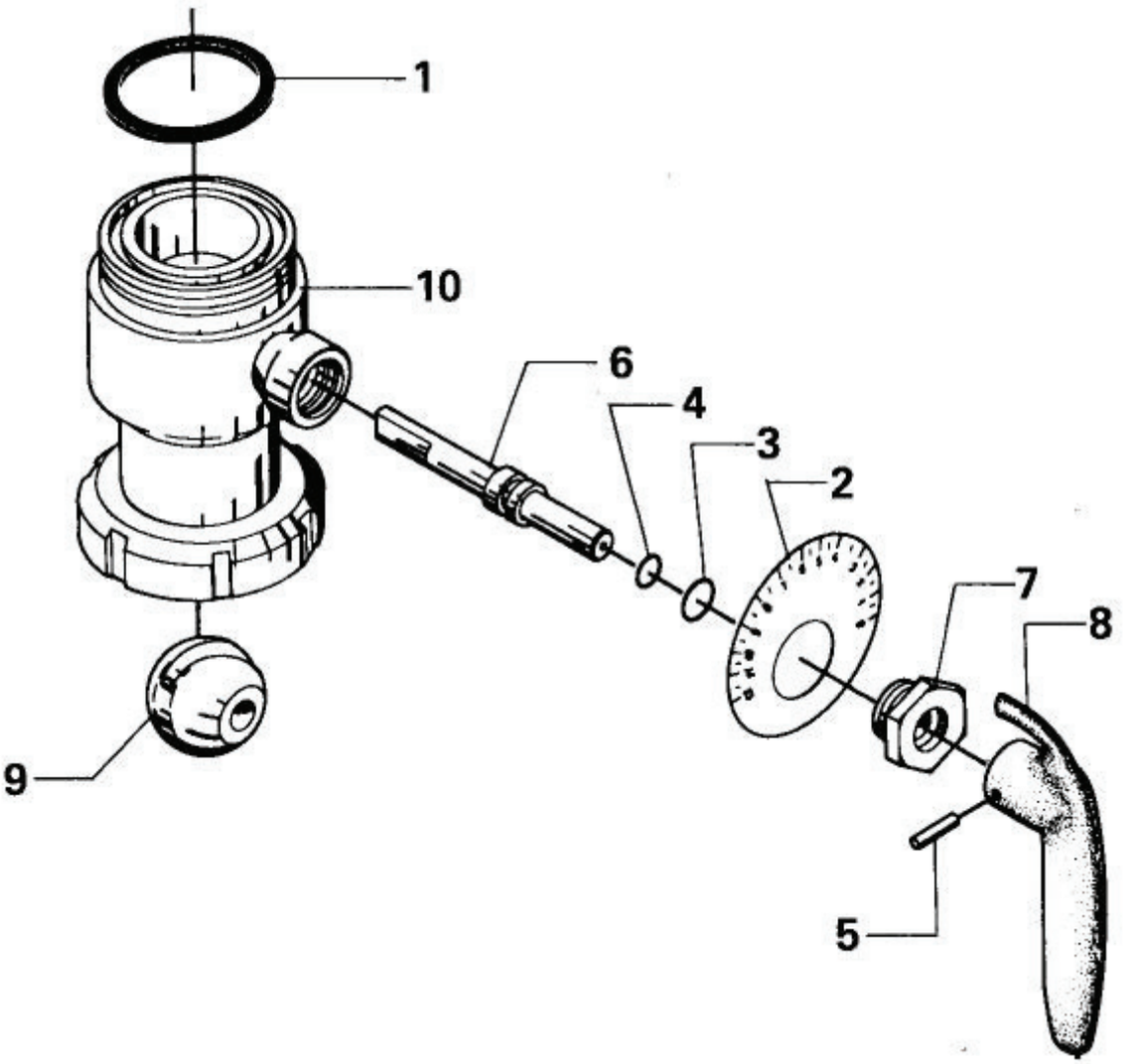

Pos	Qty	Denomination	aperture 6 mm 3134500871 51 mm	aperture 12 mm 3134500981 51 mm	3134501202 63.5 mm
AISI 304					
1	1	Seal	190604	190604	190605
2	1	Scale			
3	1	O-ring			
	1	Cup spring			
4	1	O-ring			
5	1	Pin	22211937	22211937	22211937
6	1	Axle			
7	1	Nut			
8	1	Handle			
9	1	Valve plug			
10	1	Valve body			

Recommended spare parts: pos. 1, 3, 4.

Not manufactured anymore

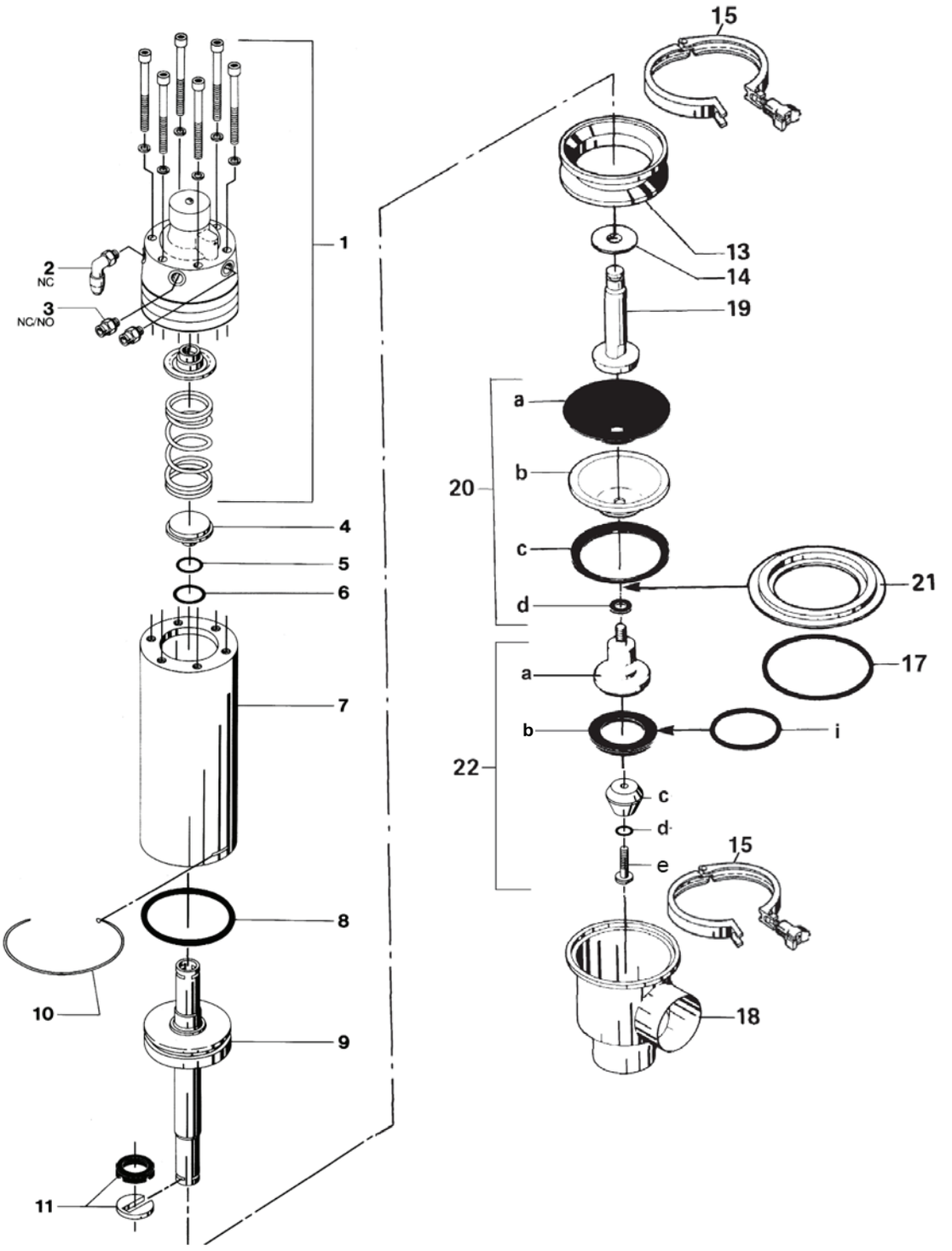

Pos	Qty	Denomination	1 1/2”	2”	2 1/2”	3”	4”
13	1	Intermediate piece	3135308131	3135308131	3135308131	3135308401	3135308401
Clamp							
15	1	Heavy duty clamp	211056	211056	211056	211057	211057
15a	1	Heavy duty clamp	88428363	88428363	88428363	9612011205	9612011205
Valve body (polished)							
18	1	Valve body, lower, 2 ports, GC	31353103010	3135310302	3135310303	3135310304	3135310305
	1	Valve body, lower, 2 ports, weld	3135311001	3135311011	3135311021	3135311031	3135311041
	1	Valve body, lower, 3 ports, GC	NA	NA	NA	NA	NA
	1	Valve body, lower, 3 ports, weld	NA	NA	NA	NA	NA
Valve Plug							
14	1	Washer, (prior to 11/99)	3135308211	3135308211	3135308211	3135308212	3135308212
	1	Washer, (post 11/99 to present)	3135308213	3135308213	3135308213	3135308212	3135308212
17 □	1	Seal ring, EPDM (standard)	NA	NA	NA	3135302051	3135302051
□	1	Seal ring, NBR	NA	NA	NA	3135302052	3135302052
□	1	Seal ring, FPM	NA	NA	NA	3135302053	3135302053
19	1	Stem, upper	3135308091	3135308091	3135308091	3135308391	3135308391
20 □	1	Diaphragm set, PTFE, EPDM*	9611920001	9611920001	9611920001	9611920007	9611920007
□	1	Diaphragm set, NBR	9611920081	9611920081	9611920081	9611920083	9611920083
□	1	Diaphragm set, FPM	9611920082	9611920082	9611920082	9611920084	9611920084
20a	1	Diaphragm support, EPDM	3135308161	3135308161	3135308161	3135308162	3135308162
20b	1	Diaphragm, PTFE	3135308201	3135308201	3135308201	3135308202	3135308202
20c	1	L-seal, EPDM (standard)	3135308171	3135308171	3135308171	3135308171	3135308171
	1	L-seal, NBR	3135308172	3135308172	3135308172	3135308172	3135308172
	1	L-seal, FPM	3135308173	3135308173	3135308173	3135308173	3135308173
20d	1	Stem seal, EPDM (standard)	3135308181	3135308181	3135308181	3135308182	3135308182
	1	Stem seal, NBR	3135308183	3135308183	3135308183	3135308184	3135308184
	1	Stem seal, FPM	3135308185	3135308185	3135308185	3135308186	3135308186

*(complete replacement recommended)

Valve Plug							
21	1	Diaphragm ring	NA	NA	NA	3135308411	3135308411
22a	1	Stem, lower	3135308111	3135308121	3135308151	3135308431	3135308461
22b □	1	Seal, EPDM (standard)	3135303201	3135303211	3135303221	NA	NA
	1	Seal, NBR	3135303202	3135303212	3135303222	NA	NA
	1	Seal, FPM	3135303203	3135303213	3135303223	NA	NA
22e	1	Plug head	3135305151	3135305161			
22f □	1	O-ring, EPDM (standard)	99003401	99003401	99003401	99003401	99003401
	1	O-ring, NBR	22340421	22340421	22340421	22340421	22340421
	1	O-ring, FPM	22340435	22340435	22340435	22340435	22340435
22g	1	Screw	3135305141	3135305141	3135305141	3135305141	3135305141
22i □	1	O-ring, EPDM (standard	NA	NA	NA	9611990544	9611991491
	1	O-ring, NBR	NA	NA	NA	9611990029	9611992549
	1	O-ring, FPM	NA	NA	NA	9611991345	9611992550

Parts marked with □ are included in the service kits.

		1 1/2”	2”	2 1/2”	3”	4”
□	**Service kit for valve, EPDM**	**9611920040**	**9611920041**	**9611920042**	**9611920043**	**9611920044**
□	**Service kit for valve, NBR**	**9611920085**	**9611920087**	**9611920089**	**9611920091**	**9611920093**
□	**Service kit for valve, FPM**	**9611920086**	**9611920088**	**9611920090**	**9611920092**	**9611920094**

Not manufactured anymore

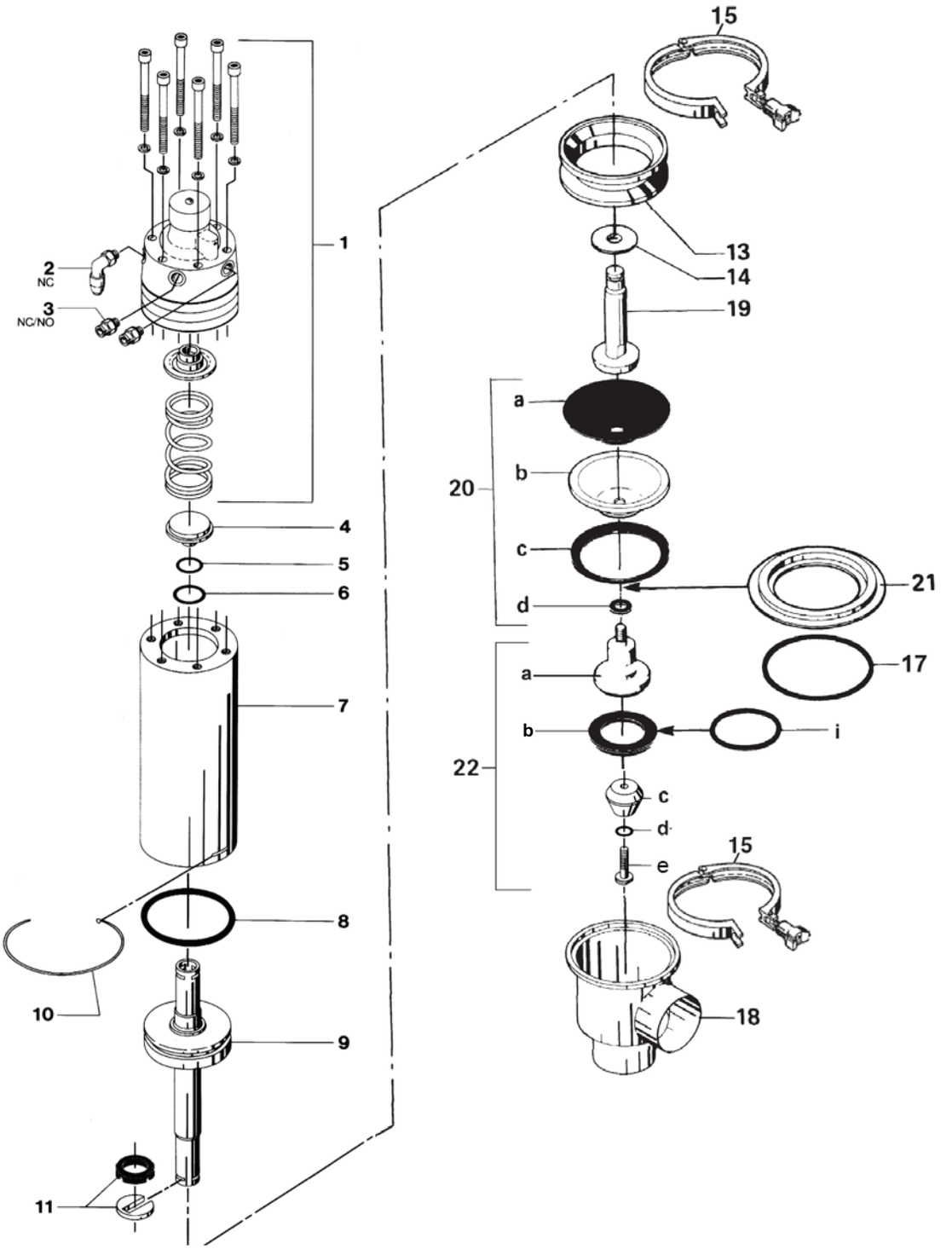

Pos		Qty	Denomination	1 1/2”	2”	2 1/2”	3”	4”
		1	Actuator complete, NO	3135311541	3135311541	3135311541	3135311544	3135311544
		1	Actuator complete, NC	3135311542	3135311542	3135311542	3135311543	3135311543
1		1	Valve positioner, NO	769498	769498	769498	769498	769498
		1	Valve positioner, NC	769499	769499	769499	769499	769499
2		1	Air fitting, NC	88116843	88116843	88116843	88116843	88116843
3		2	Air fitting, NO/NC	88116878	88116878	88116878	88116878	88116878
4		1	Spring support	3135311451	3135311451	3135311451	3135311451	3135311451
5	□	1	O-ring	9611990038	9611990038	9611990038	9611990038	9611990038
6	□	2	O-ring	22340625	22340625	22340625	22340649	22340649
7		1	Cylinder	3135311481	3135311481	3135311481	3135311482	3135311482
8	□	1	O-ring	22340174	22340174	22340174	22340175	22340175
9		1	Piston	3135306211	3135306211	3135306211	3135306191	3135306191
10	□	1	Lock wire	3135301511	3135301511	3135301511	3135301891	3135301891
11	□	1	Clip complete	3135307931	3135307931	3135307931	3135307932	3135307932
12		1	Spring assembly	3135306251	3135306251	3135306251	3135306221	3135306221
13	□	1	O-ring	96119900396	96119900396	96119900396	22340617	22340617
14		1	Bonnet	3135301331	3135301331	3135301331	3135301901	3135301901
16		1	Air fitting, NC	9611994682	9611994682	9611994682	9611994682	9611994682

Parts marked with □ are included in the service kits.

		1 1/2”	2”	2 1/2”	3”	4”
□	Service kit for actuator	9611920300	9611920300	9611920300	9611920319	9611920319

Not manufactured anymore

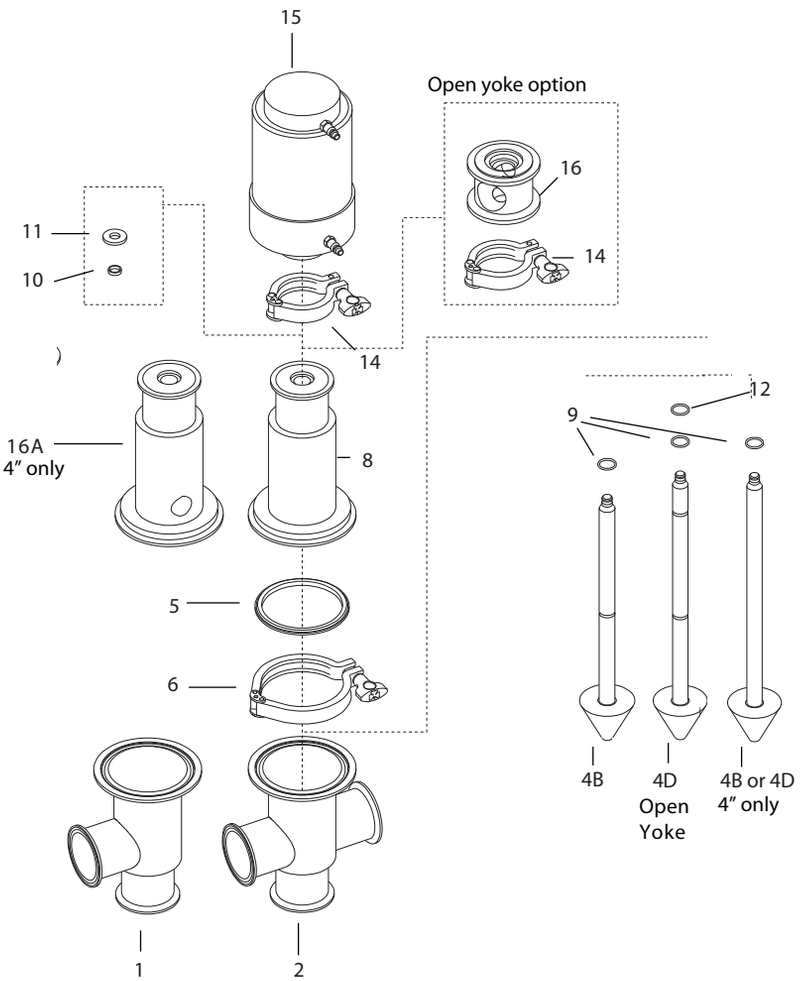

Pos		Qty	Denomination	1”	1 1/2”	2”	2 1/2”	3”	4”
1		1	Lower body model, 10	NA	NA	NA	NA	NA	NA
2		1	Lower body model, 30	NA	NA	NA	v	NA	NA
4B		1	Valve plug 10 & 30	770401	775737	775741	775747	770732	771969
4D		1	171OY valve plug 10 & 30	NA	NA	NA	v	NA	NA
5	□♦	1	Body gasket, BUNA	755415	755415	755416	755417	755418	755421
	□♦	1	Body gasket, EPDM	750157	750157	750062	751799	750811	750686
	□♦	1	Body gasket, SFY	750667	750667	750497	750209	750609	750738
6		1	Body clamp	212205	212205	212206	212207	212208	212209
8		1	Bonnet 10 & 30	NA	NA	NA	NA	NA	NA
9	□	1	Stem O-ring, BUNA	755351	755351	755351	755357	755357	300543
	□	1	Stem O-ring, EPDM	750036	750036	750036	750037	750037	300016
	□	1	Stem O-ring, SFY	750172	750172	750172	750173	750173	300061
10	□♦	1	Bonnet O-ring, BUNA	755357	755357	755357	755370	755370	755370
	□♦	1	Bonnet O-ring, EPDM	750037	750037	750037	750132	750132	750132
	□♦	1	Bonnet O-ring, SFY	750173	750173	750173	750077	750077	750077
11		1	Ss washer	754781	754781	754781	754776	754776	754776
12	♦	1	OY stem O-ring BUNA	755388	755388	755388	755542	755542	NA
	♦	1	OY stem O-ring EPDM	750004	750004	750004	750728	750728	NA
	♦	1	OY stem O-ring SFY	750084	750084	750084	751715	751715	NA
14		1	Actuator clamp	212196	212196	212196	212196	212196	212196
15			See actuator section						
16		1	Open yoke	NA	NA	NA	NA	NA	NA
16A		1	OY bonnet	NA	NA	NA	NA	NA	NA

Parts marked with □♦ are included in the service kits.

		1”	1 1/2”	2”	2 1/2”	3”	4”
□	171 Service Kit BUNA	9613990184	9613990184	9613990187	9613990190	9613990193	9613990196
□	171 Service Kit EPDM	9613990185	9613990185	9613990188	9613990191	9613990194	9613990197
□	171 Service Kit SFY	9613990186	9613990186	9613990189	9613990192	9613990195	9613990198
♦	171OY Service Kit BUNA	9613990199	9613990199	9613990202	9613990205	9613990208	9613990211
♦	171OY Service Kit EPDM	9613990200	9613990200	9613990203	9613990206	9613990209	9613990212
♦	171OY Service Kit SFY	9613990201	9613990201	9613990204	9613990207	9613990210	9613990213

Not manufactured anymore

1.8

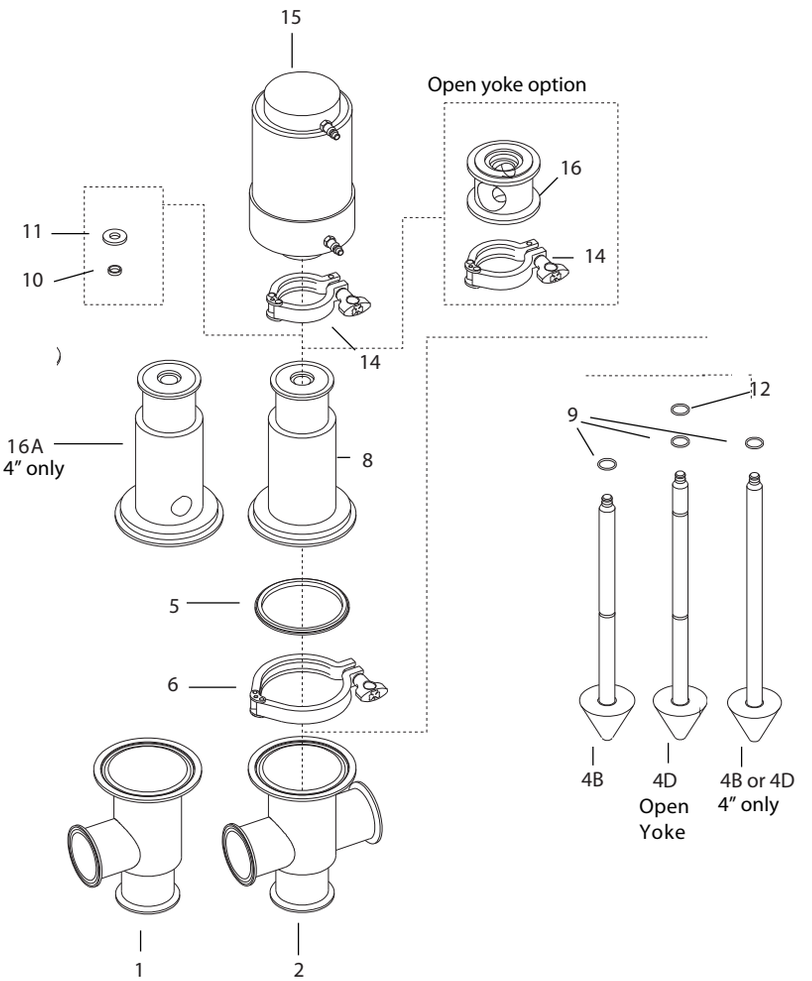

Pos		Qty	Denomination	1”	1 1/2”	2”	2 1/2”	3”	4”
1		1	Lower body model, 10	NA	NA	NA	NA	NA	NA
2		1	Lower body model, 30	NA	NA	NA	v	NA	NA
4B		1	Valve plug 10 & 30	770401	775737	775741	775747	770732	771969
4D		1	171OY valve plug 10 & 30	NA	NA	NA	v	NA	NA
5	□♦	1	Body gasket, BUNA	755415	755415	755416	755417	755418	755421
	□♦	1	Body gasket, EPDM	750157	750157	750062	751799	750811	750686
	□♦	1	Body gasket, SFY	750667	750667	750497	750209	750609	750738
6		1	Body clamp	212205	212205	212206	212207	212208	212209
8		1	Bonnet 10 & 30	NA	NA	NA	NA	NA	NA
9	□	1	Stem O-ring, BUNA	755351	755351	755351	755357	755357	300543
	□	1	Stem O-ring, EPDM	750036	750036	750036	750037	750037	300016
	□	1	Stem O-ring, SFY	750172	750172	750172	750173	750173	300061
10	□♦	1	Bonnet O-ring, BUNA	755357	755357	755357	755370	755370	755370
	□♦	1	Bonnet O-ring, EPDM	750037	750037	750037	750132	750132	750132
	□♦	1	Bonnet O-ring, SFY	750173	750173	750173	750077	750077	750077
11		1	Ss washer	754781	754781	754781	754776	754776	754776
12	♦	1	OY stem O-ring BUNA	755388	755388	755388	755542	755542	NA
	♦	1	OY stem O-ring EPDM	750004	750004	750004	750728	750728	NA
	♦	1	OY stem O-ring SFY	750084	750084	750084	751715	751715	NA
14		1	Actuator clamp	212196	212196	212196	212196	212196	212196
15			See actuator section						
16		1	Open yoke	NA	NA	NA	NA	NA	NA
16A		1	OY bonnet	NA	NA	NA	NA	NA	NA

Parts marked with □♦ are included in the service kits.

		1”	1 1/2”	2”	2 1/2”	3”	4”
□	171 Service Kit BUNA	9613990184	9613990184	9613990187	9613990190	9613990193	9613990196
□	171 Service Kit EPDM	9613990185	9613990185	9613990188	9613990191	9613990194	9613990197
□	171 Service Kit SFY	9613990186	9613990186	9613990189	9613990192	9613990195	9613990198
♦	171OY Service Kit BUNA	9613990199	9613990199	9613990202	9613990205	9613990208	9613990211
♦	171OY Service Kit EPDM	9613990200	9613990200	9613990203	9613990206	9613990209	9613990212
♦	171OY Service Kit SFY	9613990201	9613990201	9613990204	9613990207	9613990210	9613990213

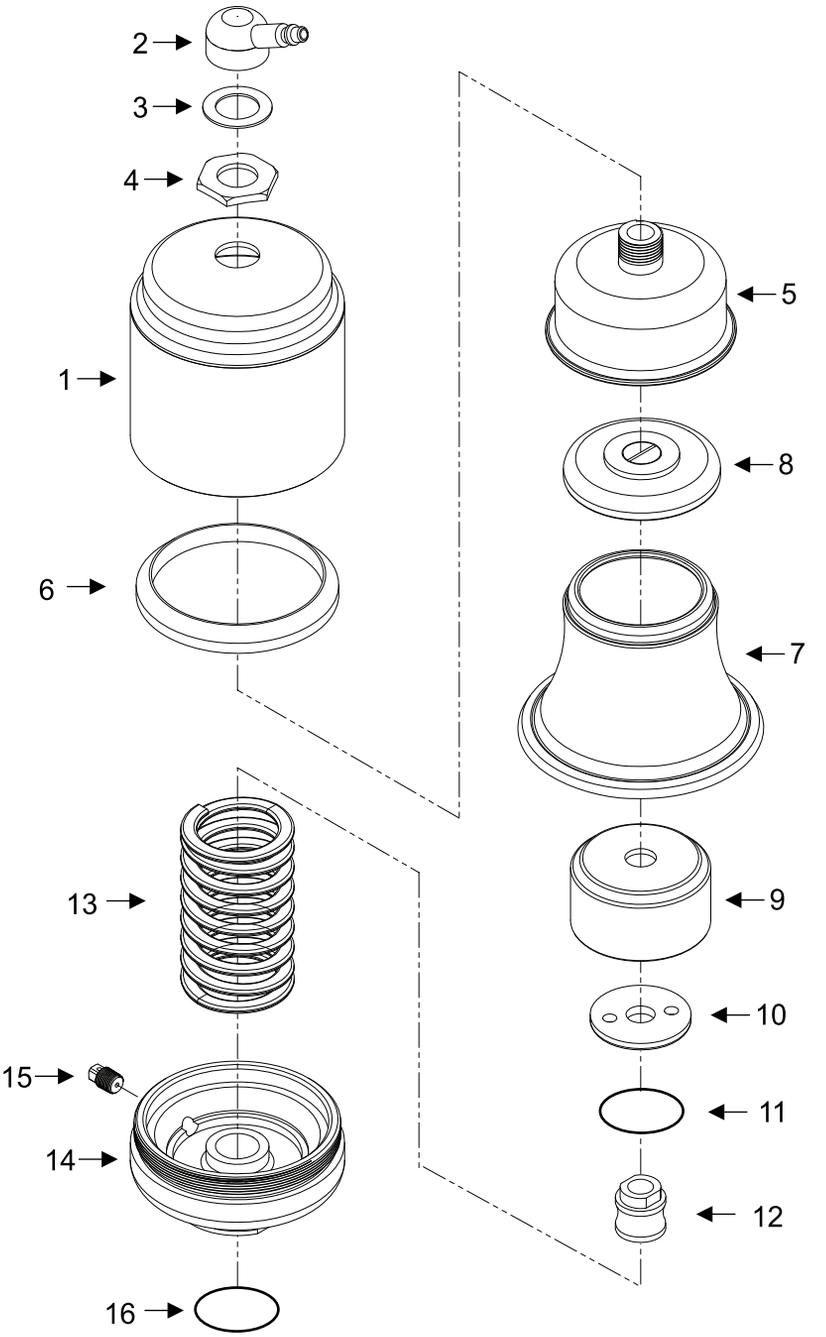
2
3
4
1
6
5
8
7
9
10
11
12
13
15
14
16

Pos		Qty	Denomination	
1		1	Actuator body cylinder	750032
2		1	Air coupler adapter	764249
3		1	Gasket	755451
4		1	Sealing nut	754328
5		1	Outer diaphragm clamp/retainer	763805
6		1	Body insert	764008
7	□	1	Diaphragm	763501
8		1	Top diaphragm clamp/retainer	763515
9		1	Inner diaphragm clamp/retainer	763753
10		1	Nut-retainer assembly	754265
11		1	Washer	754797
12		1	Coupler	764240
13		1	Compression spring	750752
14		1	Bonnet	750428
15		1	Vented plug	181256
16	□	1	O-ring	755353

Parts marked with □ are included in the service kits.

Service kit **9613990042**

Not manufactured anymore

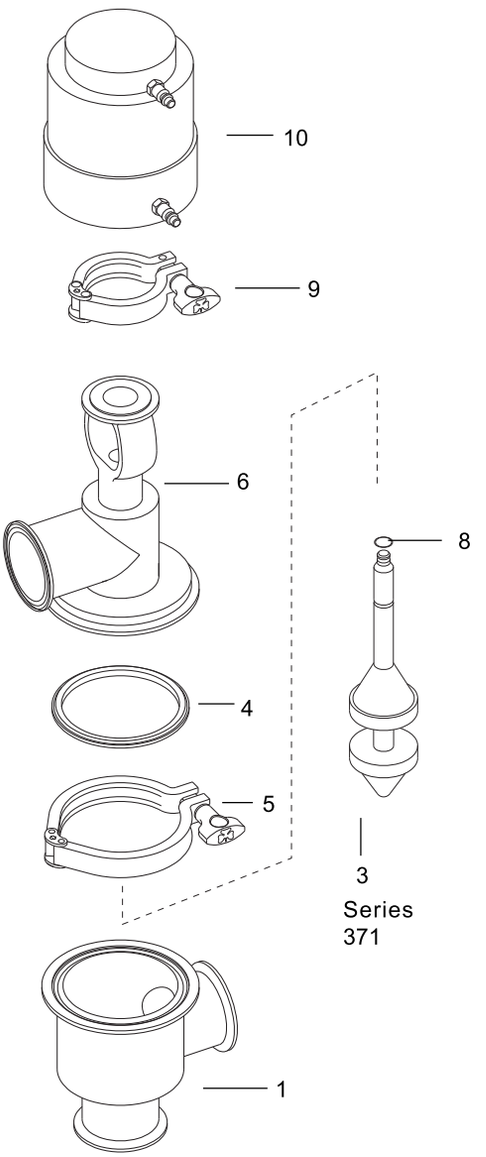

Pos		Qty	Denomination	1”	1 1/2’	2”	2 1/2”	3”
1		1	Lower tee body	NA	NA	NA	NA	NA
3		1	Valve stem	770594	771716	770711	771727	773108
4	□	1	Body gasket, BUNA	755415	755416	755417	755419	755420
	□	1	Body gasket, EPDM	750157	750062	751799	750812	750322
	□	1	Body gasket, SFY	750667	750497	750209	750210	750610
5		1	Body clamp	212205	212198	270266	270267	212211
6		1	Upper body	NA	NA	NA	NA	NA
8	□	1	O-ring stem, BUNA	755351	755351	755351	755357	755357
	□	1	O-ring stem, EPDM	750036	750036	750036	750037	750037
	□	1	O-ring stem, SFY	750172	750172	750172	750173	750173
9		1	Actuator clamp	212196	212196	212196	212196	212196
10		1	Actuator, type 10 N/O	750782	750782	750782	750782	750782
		1	Actuator, type 20 N/C	750785	750785	750785	750785	750785

Parts marked with □ are included in the service kits.

		1’	1 1/2’	2”	2 1/2”	3’
□	BUNA Service Kit	9613990073	9613990076	9613990079	9613990082	9613990085
□	EPDM Service Kit	9613990074	9613990077	9613990080	9613990083	9613990086
□	SFY Service Kit	9613990075	9613990078	9613990081	9613990084	9613990087

Not manufactured anymore

1.8

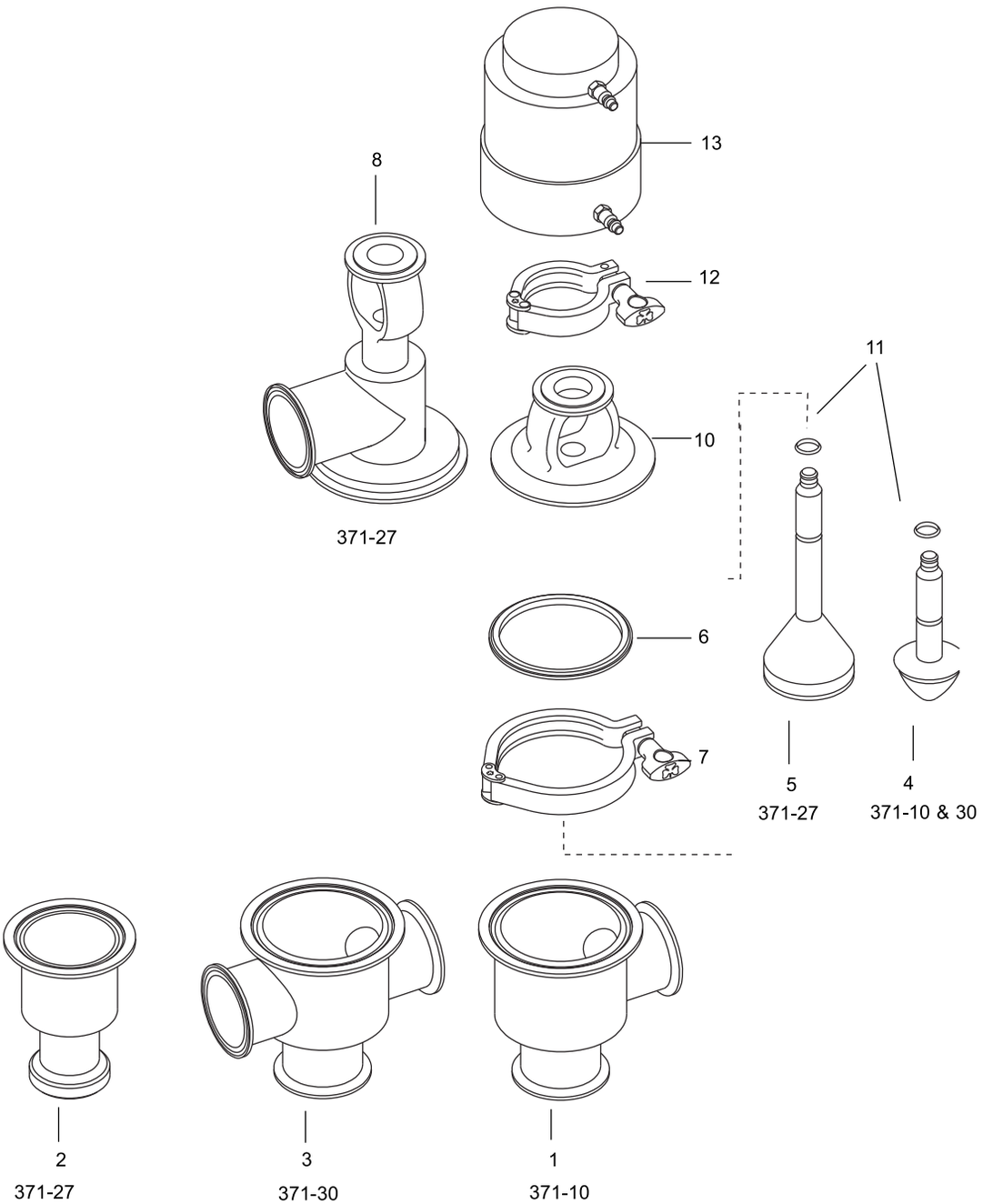

Pos		Qty	Denomination	1”	1 1/2”	2”	2 1/2”	3”
1		1	Tee body	NA	NA	NA	NA	NA
2		1	Lower body 27	NA	NA	NA	NA	NA
3		1	Cross body	NA	NA	NA	NA	NA
4		1	Valve stem	772998	772999	773000	773001	773002
		1	Valve stem, Special taper	Contact Alfa Laval	Contact Alfa Laval	Contact Alfa Laval	Contact Alfa Laval	Contact Alfa Laval
5		1	Valve stem 27	NA	770053	771970	9634047813	770176
6	□	1	Body gasket, BUNA	755415	755416	755417	755419	755420
	□	1	Body gasket, EPDM	750157	750062	751799	750812	750322
	□	1	Body gasket, SFY	750667	750497	750209	750210	750610
7		1	Body clamp	212205	212198	270266	270267	212211
8		1	Upper body 27	NA	NA	NA	NA	NA
10		1	Bonnet	750589	754233	754040	754054	754038
11	□	1	O-ring stem, BUNA	755351	755351	755351	755357	755357
	□	1	O-ring stem, EPDM	750036	750036	750036	750037	750037
	□	1	O-ring stem, SFY	750172	750172	750172	750173	750173
12		1	Actuator clamp	212196	212196	212196	212196	212196
13		1	Actuator, type 10 N/O	750782	750782	750782	750782	750782
		1	Actuator, type 20 N/C	750785	750785	750785	750785	750785
		1	Actuator, type 15	750790	750790	750790	750790	750790
		1	Actuator, type 25 (27 only)	750790	750790	750790	750790	750790

Parts marked with □ are included in the service kits.

		1”	1 1/2”	2”	2 1/2”	3”
□	BUNA Service Kit	9613990073	9613990076	9613990079	9613990082	9613990085
□	EPDM Service Kit	9613990074	9613990077	9613990080	9613990083	9613990086
□	SFY Service Kit	9613990075	9613990078	9613990081	9613990084	9613990087

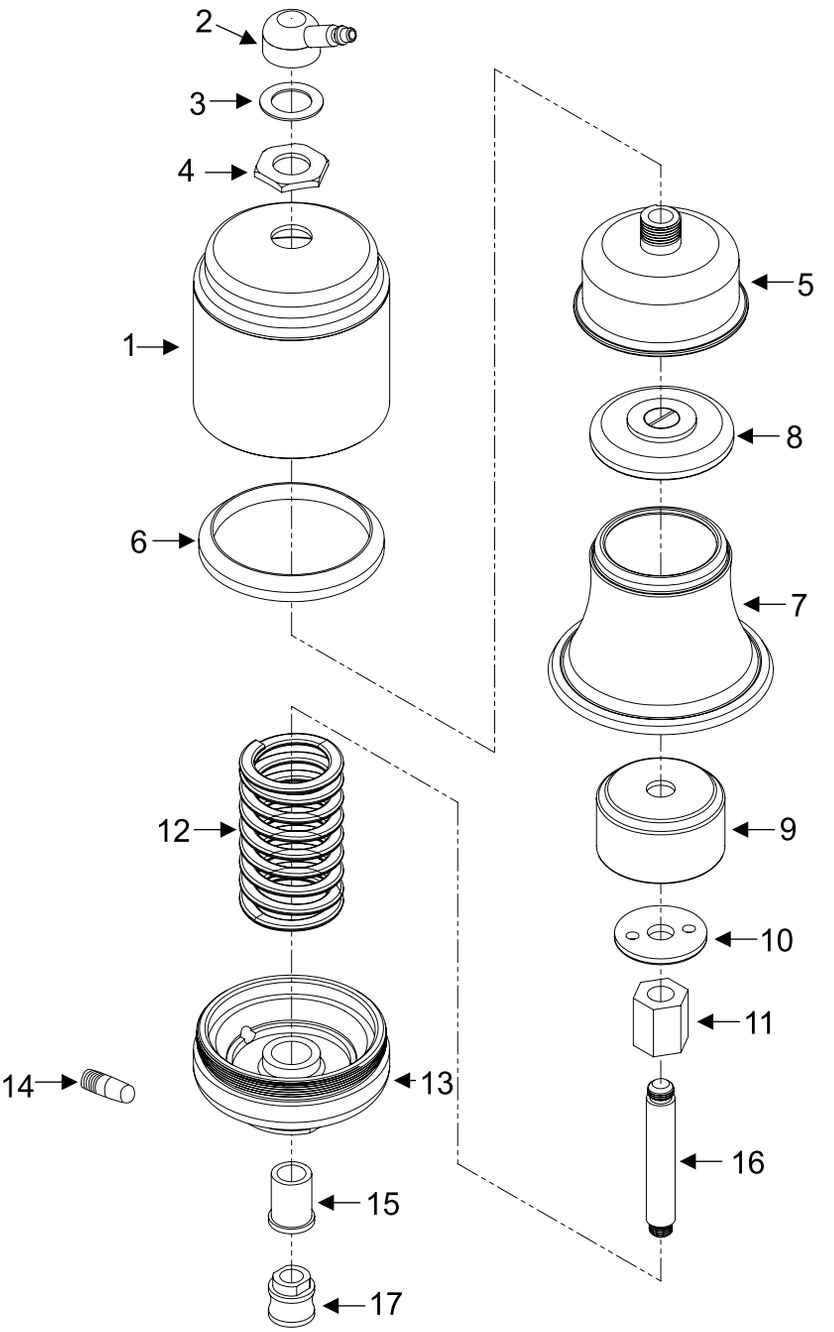
2
3
4
1
6
5
8
7
12
9
10
11
14
13
16
15
17

Pos		Qty	Denomination	
1		1	Actuator body cylinder	750032
2		1	Air coupler adaptor	764249
3		1	Gasket	755451
4		1	Sealing nut	754328
5		1	Outer diaphragm clamp retainer	763805
6		1	Body insert	764088
7	□	1	Diaphragm	763501
8		1	Top diaphragm clamp retainer	763765
9		1	Inner diaphragm clamp retainer	763753
10		1	Nut retainer	754265
11		1	Adaptor	764089
12		1	Compression ring	750752
13		1	Bonnet	750504
14		1	Vented plug	181256
15	□	1	Bushing	764754
16		1	Actuator stem	776625
17	□	1	Coupler	

Parts marked with □ are included in the service kits.

□	**Service Kit**	**9613990134**

1.8

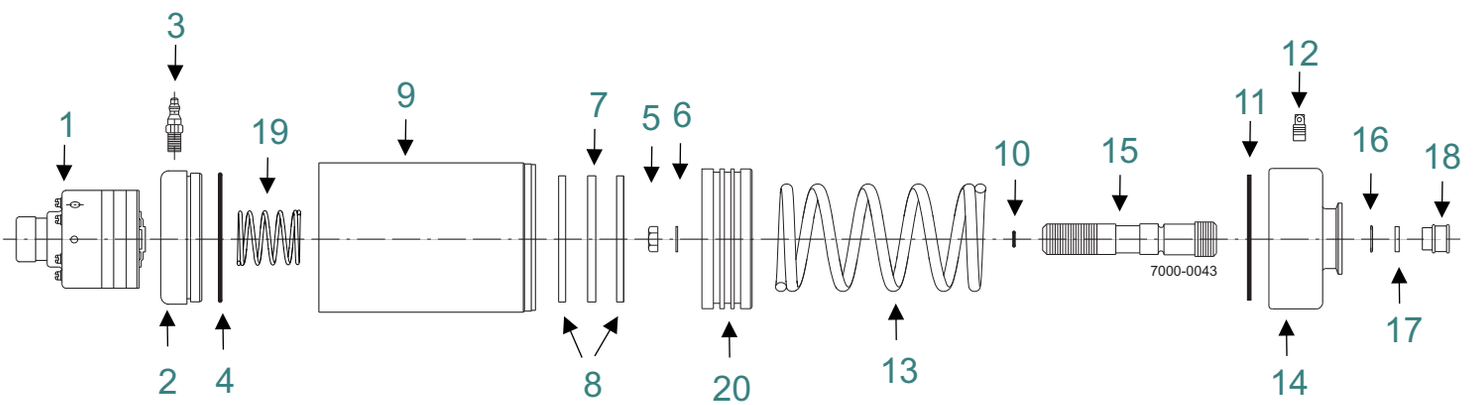

Pos		Qty	Denomination	Item #
1		1	Moore Positioner	769498
2		1	Upper Bonnet	750119
3		1	Pipe Plug	751541
4		1	O ring	755462
5		1	Nut	189923
6		1	Lockwasher	189971
7	□	1	Felt Seal	755464
8	□	2	Vee Block Packing	755460
9		1	Cylinder	750870
10	□	1	O Ring	755388
11	□	1	O Ring	296608
12		1	Vented Plug	181256
13		1	Spring Assembly	750826
14		1	Bonnet Assembly	753796
15		1	Actuator Stem	750328
16		1	Retaining Ring	755090
17	□	1	Vee Block Packing	755461
18		1	Coupler	764241
19		1	Spring Assembly	750998
20		1	Piston	750118

		Item #
□	**Service Kit**	**752039**

1.8

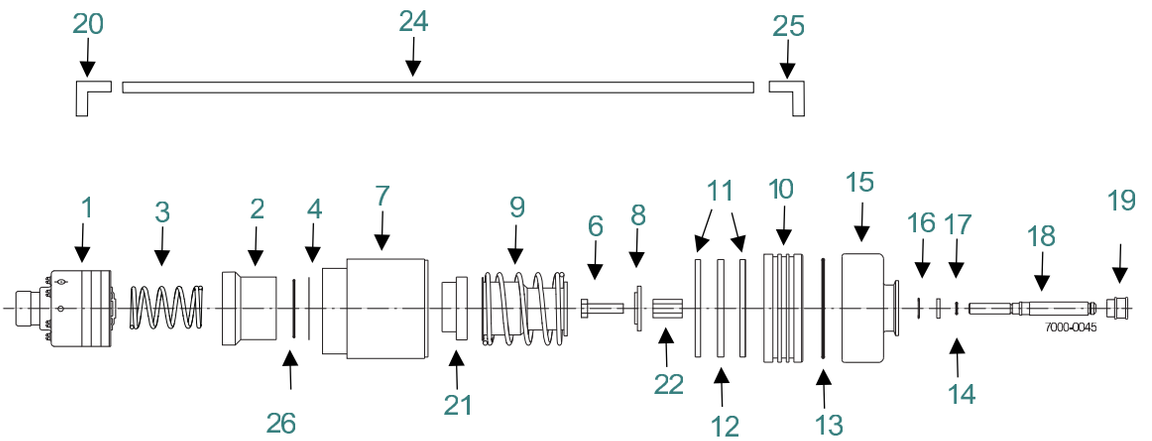

Pos		Qty	Denomination	Item #
1		1	Moore Positioner	769499
2		1	Positioner Adapter	764078
3		1	Range Spring	750998
4		1	Gasket	755549
5		1	Vent Plug	181256
6		1	Screw	189888
7		1	Cylinder	751508
8		1	Range Spring Adapter	761216
9		1	Spring Assembly	750826
10		1	Piston	767870
11	□	2	Vee Block Packing	755460
12	□	1	Felt Seal	755464
13	□	1	O Ring	755388
14	□	1	O Ring	296608
15		1	Bonnet	753796
16		1	Retaining Ring	755090
17	□	1	Vee Block Packing	755461
18		1	Actuator Stem	750328
19		1	Coupler	764241
20		1	Male Pipe Connector	766010
21		1	Adapter Retainer	751505
22		1	Spacer Nut	750504
23		1	Washer	189971
24		24”	Air Supply Line	765006
25		1	Male Pipe Connector	766009
26	□	1	O Ring	755530

Parts marked with □ are included in the service kits.

		Item #
□	**Service Kit**	**752039**

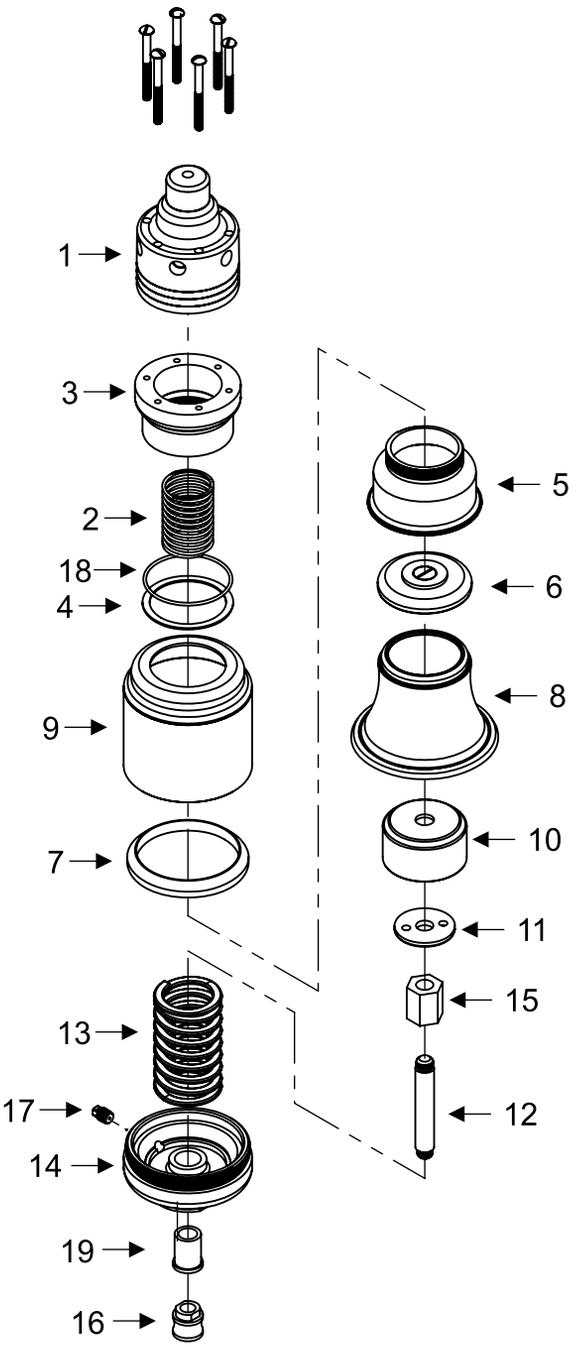
1
3
2
18
4
9
7
13
17
14
19
16
5
6
8
10
11
15
12

Pos		Qty	Denomination	
1		1	Moore Positioner	769498
		1	Moore Positioner, AR	769497
2		1	Range Spring	750998
3		1	Mounting Adapter	764078
4		1	Gasket	755549
5		1	Outer Diaphragm Clamp	763794
6		1	Inner Diaphragm Clamp	763795
7		1	Body Insert	764088
8	□	1	Diaphragm	763501
9		1	Actuator Cylinder	771543
10		1	Inner Diaphragm Guide	763753
11		1	Nut	754265
12		1	Stem	776689
13		1	Spring	750752
14		1	Bonnet	750504
15		1	Adapter	764089
16	□	1	Coupler	764241
17		1	Vented Plug	181256
18		1	O Ring	755530
19	□	1	Bushing	764754

Parts marked with □ are included in the service kits.

□	**Service Kit**	**96139901**

1.9 Safety valves

Alfa Laval Scandi Brew safety valves are designed to protect your tank from vacuum or overpressurization.



Spare parts

Safety Valve, standard, sizes DN25-DN100 . . . . . 1.9.872
Safety Valve, standard with Inductive sensor, sizes DN25-DN100 . . . . . 1.9.874
Safety Valve, pneumatic lifting with inductive sensor, sizes DN25-DN100 . . 1.9.876
Safety Valve, manual lifting, sizes DN25-DN100 . . . . . 1.9.878
SB Anti Vacuum Valve, Ø100 to Ø400 . . . . . 1.9.880
SB Anti Vacuum Valve, force opener 1.9.882
SB Anti Vacuum House 1.9.884
SB Pressure Exhaust House, 38-51 mm 1.9.886
SB Pressure Exhaust House, 76.1 mm 1.9.888
SB Pressure Relief Valve, Ø75 to Ø150 . . . . . 1.9.890
SB Pressure Relief Valve, force opener 1.9.892
D60RTHMP relief valve 1.9.894
Unique 7000 Vaccum Breaker 1.9.896

1.9

DN25

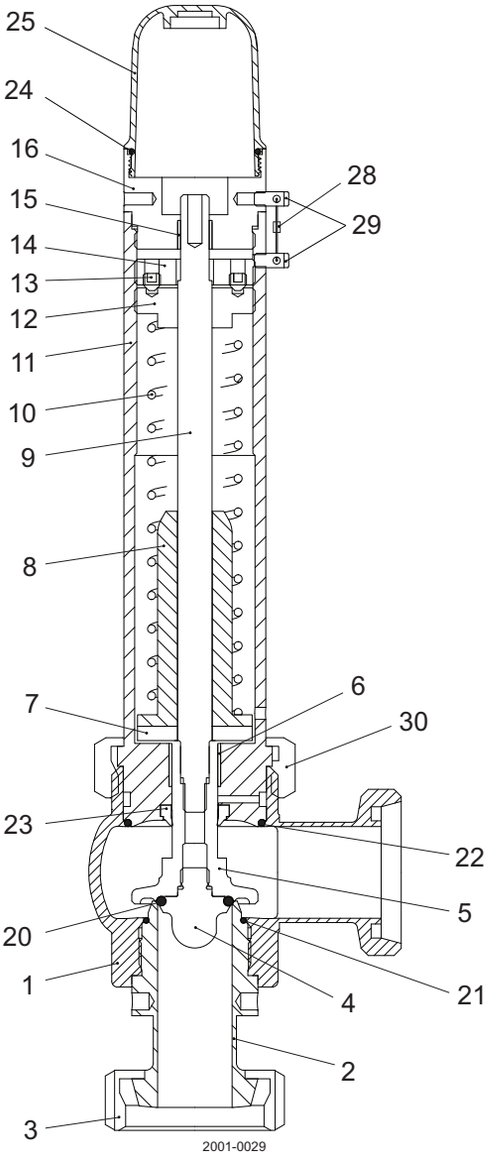

DN40-DN100

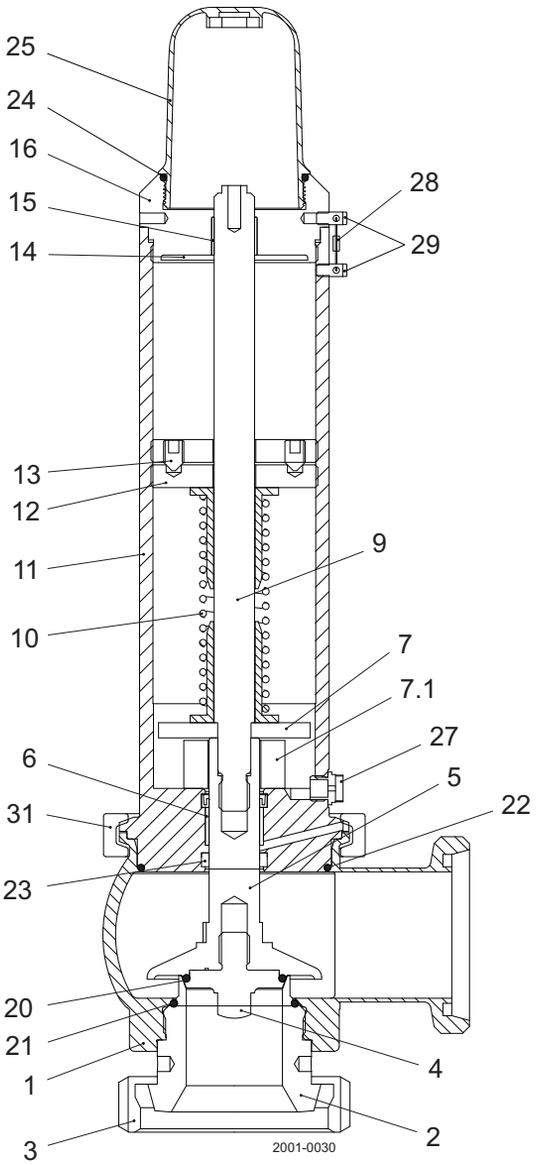

Pos		Qty	Denomination	DN25	DN40-100
1		1	Body		
2		1	Screw-in socket		
3		1	Slotted nut		
4		1	Piston plate		
5		1	Piston		
6		1	Plain bearing		
7		1	Spring disc		
7.1		1	Distance ring		
8		1	Spring guide		
9		1	Piston rod		
10		1	Pressure spring		
11		1	Spring housing		
12		1	Setting disc		
13		2	Headless pin		
14		1	Locking disc		
15		1	Plain bearing		
16		1	Cover plate		
20	▲	1	O-ring		
21	▲	1	O-ring		
22	▲	1	O-ring		
23	▲	1	Shaft sealing		
24		1	O-ring		
25		1	Hood		
25.1		1	Hood incl. o-ring (pos. 24)	9615441401	9615441402
27		1	Screw plug - deaeration		
28		1	SealingSer		
29		2	Screw		
30		1	Slotted nut		
31		1	Clamp coupling		

Service kits

		DN25	DN40	DN50	DN65	DN80	DN100
▲	Service kit, EPDM	9614446901	9614446902	9614446903	9614446904	9614446905	9614446906

900-728

1.9

DN25

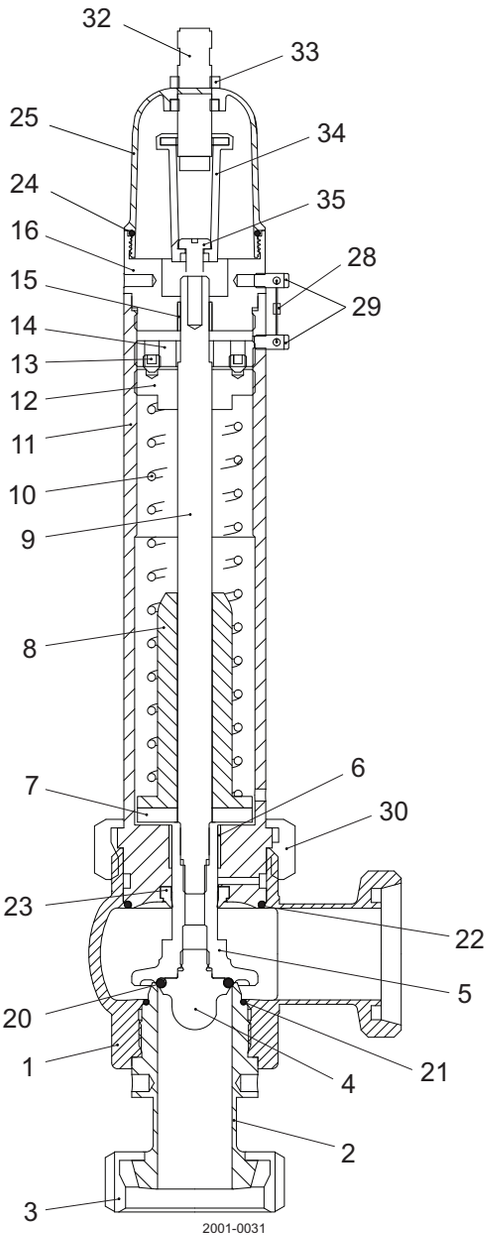

DN40-DN100

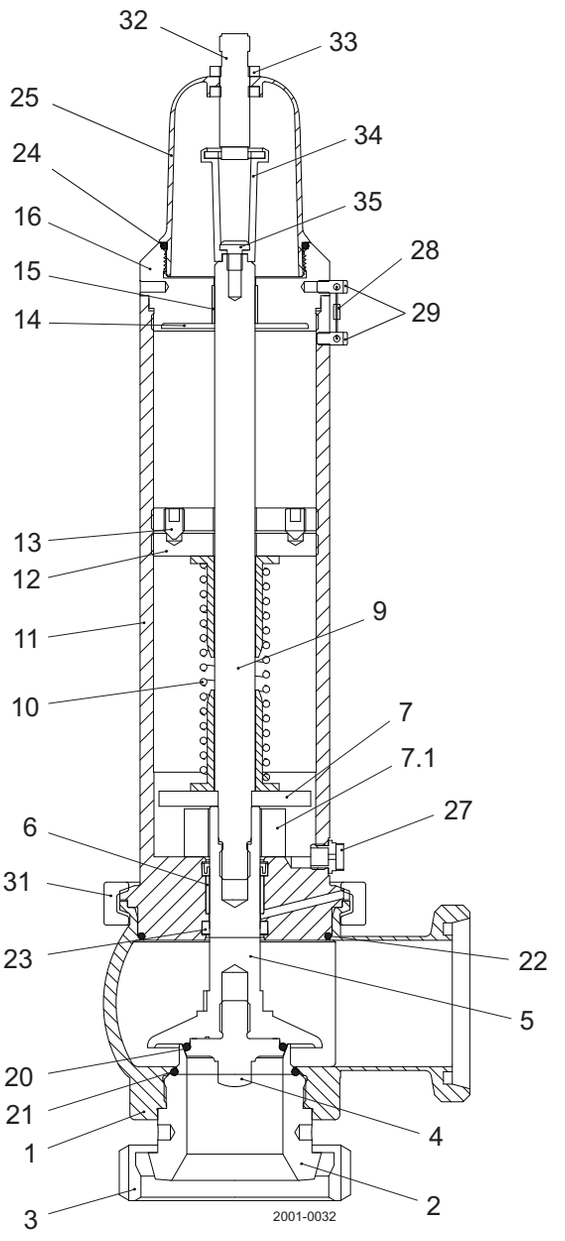

Pos		Qty	Denomination	DN25	DN40-100
1		1	Body		
2		1	Screw-in socket		
3		1	Slotted nut		
4		1	Piston plate		
5		1	Piston		
6		1	Plain bearing		
7		1	Spring disc		
7.1		1	Distance ring		
8		1	Spring guide		
9		1	Piston rod		
10		1	Pressure spring		
11		1	Spring housing		
12		1	Setting disc		
13		2	Headless pin		
14		1	Locking disc		
15		1	Plain bearing		
16		1	Cover plate		
20	▲	1	O-ring		
21	▲	1	O-ring		
22	▲	1	O-ring		
23	▲	1	Shaft sealing		
24		1	O-ring		
25		1	Hood		
25.1		1	Hood incl. o-ring (pos. 24)	9615441403	9615441404
27		1	Screw plug - deaeration		
28		1	Sealing		
29		2	Screw		
30		1	Slotted nut		
31		1	Clamp coupling		
32		1	Sensor		
33		1	Nut		
34		1	Bracket		
35		1	Screw		

Service kits

		DN25	DN40	DN50	DN65	DN80	DN100
▲	Service kit, EPDM	9614446901	9614446902	9614446903	9614446904	9614446905	9614446906

DN25

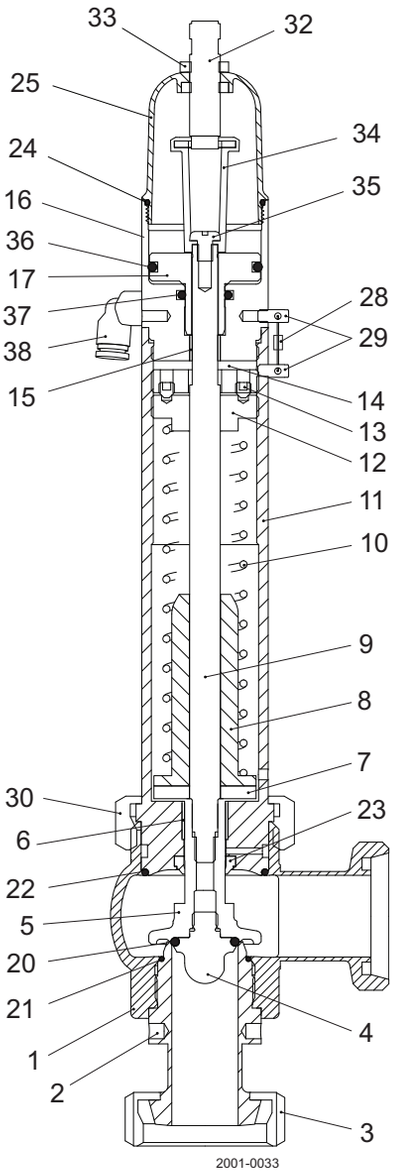

DN40-DN100

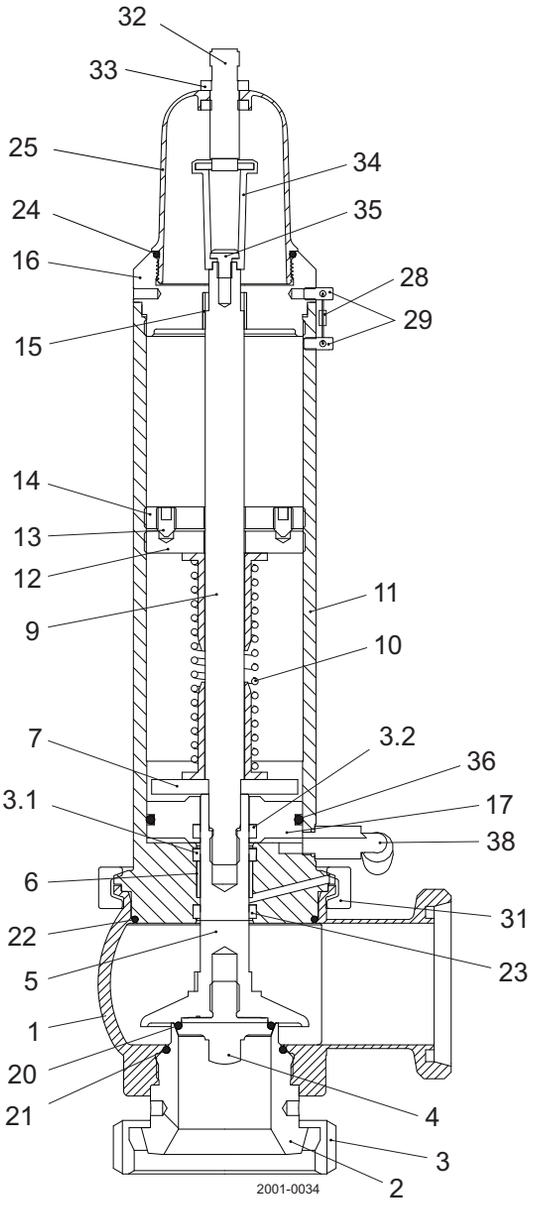

Pos		Qty	Denomination	DN25	DN40-100
1		1	Body		
2		1	Screw-in socket		
3		1	Slotted nut		
3.1		1	Sealing		
3.2		1	Sealing		
4		1	Piston plate		
5		1	Piston		
6		1	Plain bearing		
7		1	Spring disc		
8		1	Spring guide		
9		1	Piston rod		
10		1	Pressure spring		
11		1	Spring housing		
12		1	Setting disc		
13		2	Headless pin		
14		1	Locking disc		
15		1	Plain bearing		
16		1	Cover plate		
17		1	Piston		
20	▲	1	O-ring		
21	▲	1	O-ring		
22	▲	1	O-ring		
23	▲	1	Shaft sealing		
24		1	O-ring		
25		1	Hood		
25.1		1	Hood incl. o-ring (pos. 24)	9615441403	9615441404
28		1	Sealing		
29		2	Screw		
30		1	Slotted nut		
31		1	Clamp coupling		
32		1	Sensor		
33		1	Nut		
34		1	Bracket		
35		1	Screw		
36		1	O-ring		
37		1	O-ring		
38		1	Air connection		

Service kits

		DN25	DN40	DN50	DN65	DN80	DN100
▲	Service kit, EPDM	9614446901	9614446902	9614446903	9614446904	9614446905	9614446906

1.9

DN25

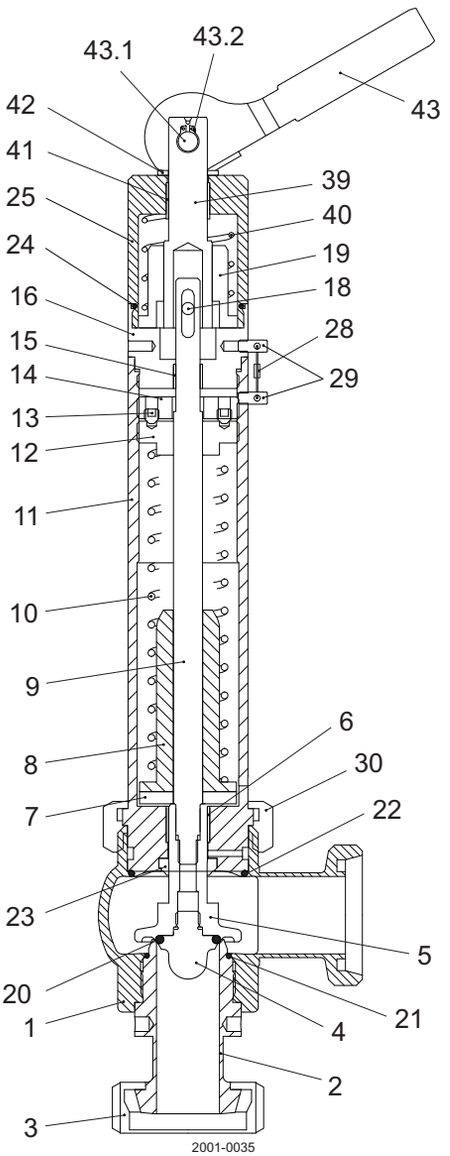

DN40-DN100

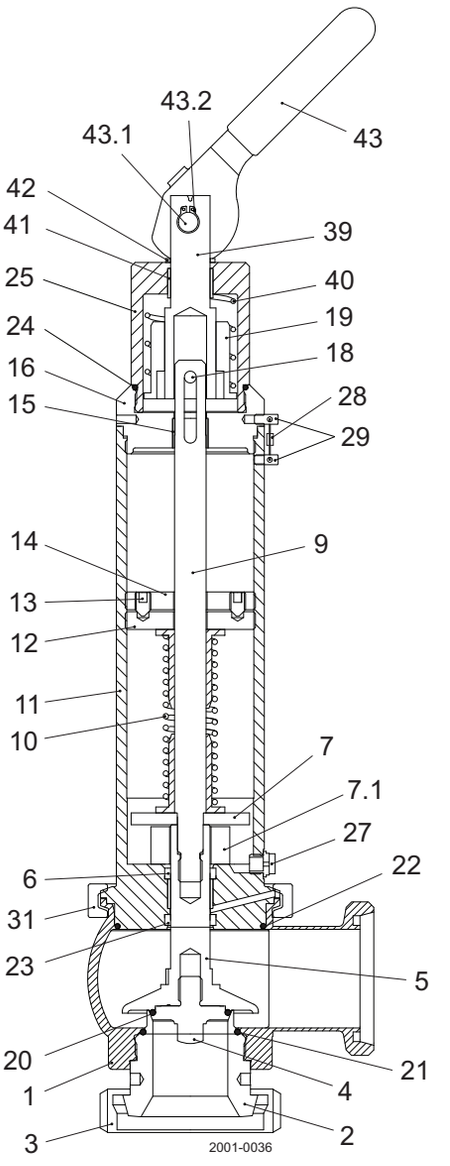

Pos		Qty	Denomination
1		1	Body
2		1	Screw-in socket
3		1	Slotted nut
4		1	Piston plate
5		1	Piston
6		1	Plain bearing
7		1	Spring disc
8		1	Spring guide
9		1	Piston rod
10		1	Pressure spring
11		1	Spring housing
12		1	Setting disc
13		2	Headless pin
14		1	Locking disc
15		1	Plain bearing
16		1	Cover plate
18		1	Pin
19		1	Spring guide
20	▲	1	O-ring
21	▲	1	O-ring
22	▲	1	O-ring
23	▲	1	Shaft sealing
24		1	O-ring
25		1	Hood
27		1	Screw plug - deaeration
28		1	Sealing
29		2	Screw
30		1	Slotted nut
31		1	Clamp coupling
39		1	Rod
40		1	Pressure spring
41		1	Bearing
42		1	Disc
43		1	Lever
43.1		1	Pin
43.2		1	Circlip

1.9

Service kits

		DN25	DN40	DN50	DN65	DN80	DN100
▲	Service kit, EPDM	9614446901	9614446902	9614446903	9614446904	9614446905	9614446906

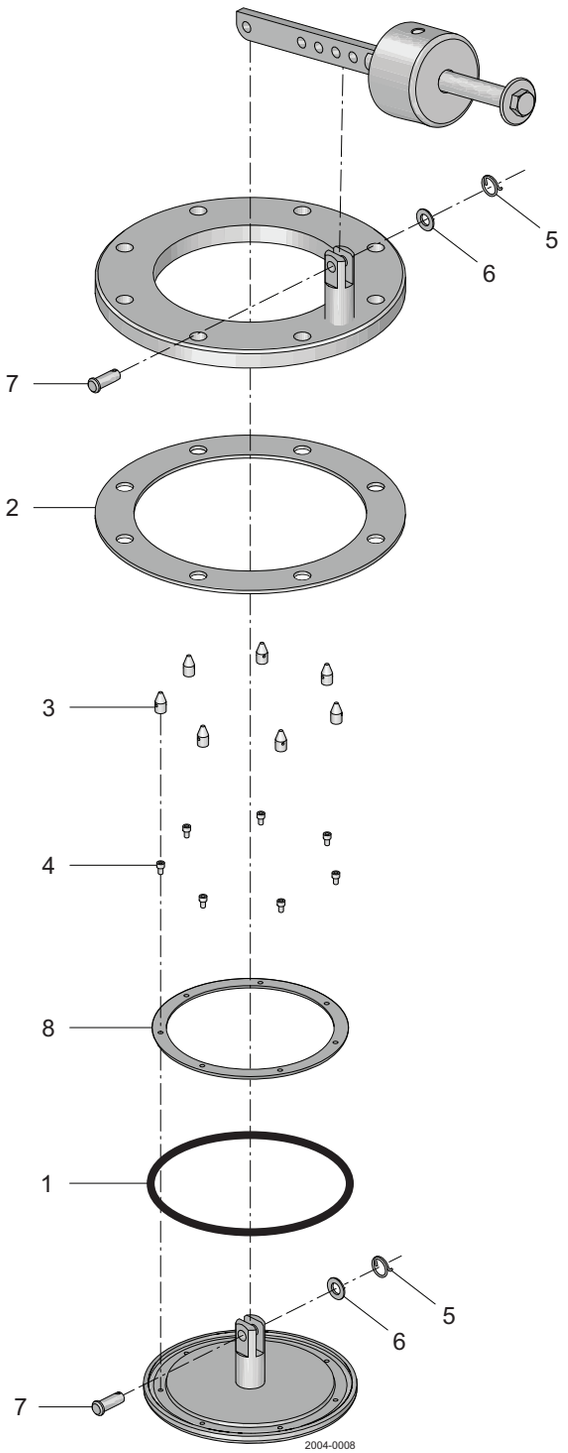
5
6
7
2
3
4
8
1
5
6
7
2004-0008

Pos		Qty	Denomination	Ø100	Ø150	Ø200	Ø250	Ø300	Ø400
1		1	O-ring, NBR	9611996053	9611996052	9611996051	9611996050	9611995996	9611995997
2		1	Gasket, EPDM	9615087201	9615087301	9615087401	9615087501	9615087601	9615087701
3	□	8	Control pin, PTFE						
4	□	8	Screw						
5	◆	2	Locking ring						
6	◆	2	Washer						
7	◆	2	Bearing tap						

Assembly kits for Ø100 to Ø400

□	Assembly kit, AVV	9615145807
◆	Assembly kit, AVV	9615145808

Parts marked with □◆ are included in the assembly kits.

1.9

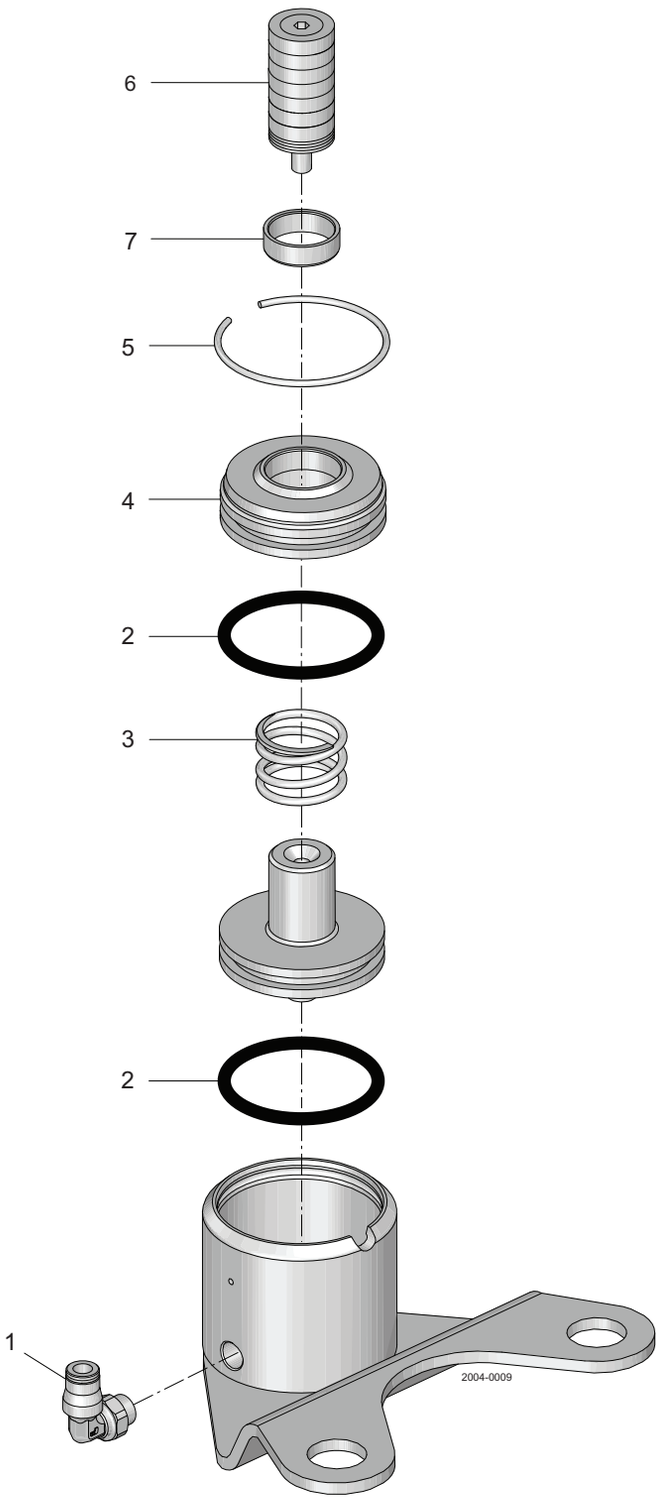

Pos		Qty	Denomination	Ø100 to Ø400
1		1	Air fitting	9611991988
2		2	O-ring, NBR	9611995509
3	○	1	Spring	
4	○	1	Force opener cover	
5	○	1	Locking ring	
6	○	1	Spacer kit	
7			Bushing	

Assembly kits for Ø100 to Ø400

○	**Assembly kit, force opener**	**9615146201**

Parts marked with ○ are included in the assembly kits.

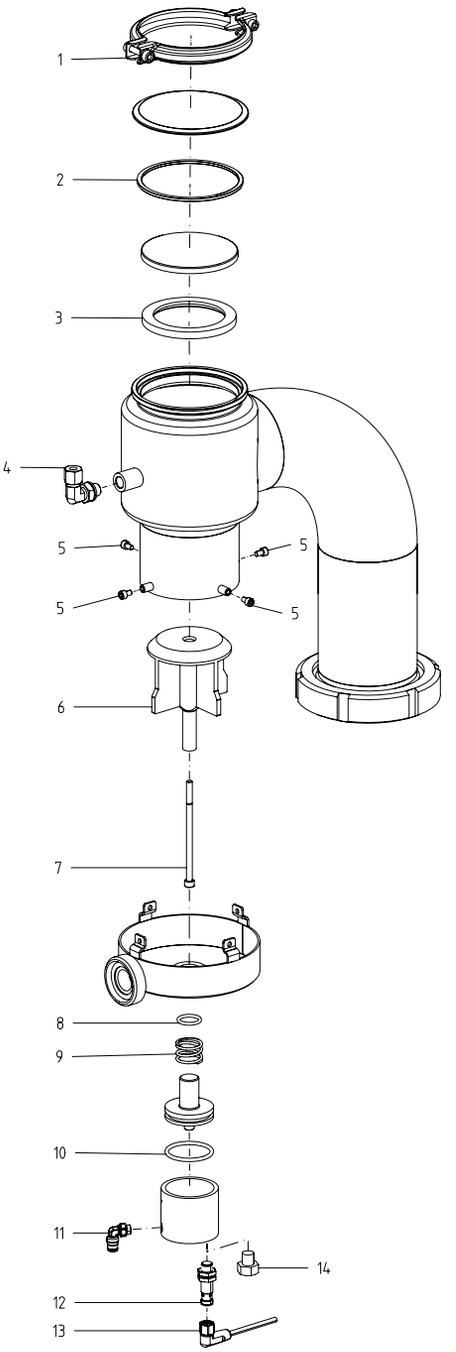
1
2
3
4
5
5
5
5
6
7
8
9
10
11
12
13
14

Pos		Qty	Denomination	51mm	76,1mm	101.6mm	DN150
1		1	Clamp	3132000273	3132000272	3132000272	9611311058
2	♦	1	Seal ring, EPDM				
3	♦	1	Plug seal, EPDM				
4		1	CIP inlet	9611995713	9611995713	9611995713	9611995713
5		4	Screw	9611995533	9611995533	9611995533	9611995533
6		1	Vaccum tail	9615102301	9615071601	9615071801	9615072001
7		1	Screw	9611995611	9611995531	9611995536	9611995532
8	□	1	O-ring, NBR				
9		1	Spring	9615065101	9615065101	9615065101	9615065101
10	□	1	O-ring, NBR				
11		1	Air fitting	9611991988	9611991988	9611991988	9611991988
12		1	Sensor	9611995744	9611995744	9611995744	9611995744
13		1	Sensor cable 5m	9611995205	9611995205	9611995205	9611995205
14		1	Plug	9615074401	9615074401	9615074401	9615074401

		51mm	76,1mm	101.6mm	DN150
Service Kits for Anti Vaccum House, 51-101.6mm, DN150					
♦	**Service kit Anti Vacuum House**	**9611924329**	**9611924330**	**9611924331**	**9611924332**
□	**Service kit Force opener**	**9615151001**	**9615151001**	**9615151001**	**9615151001**

1.9

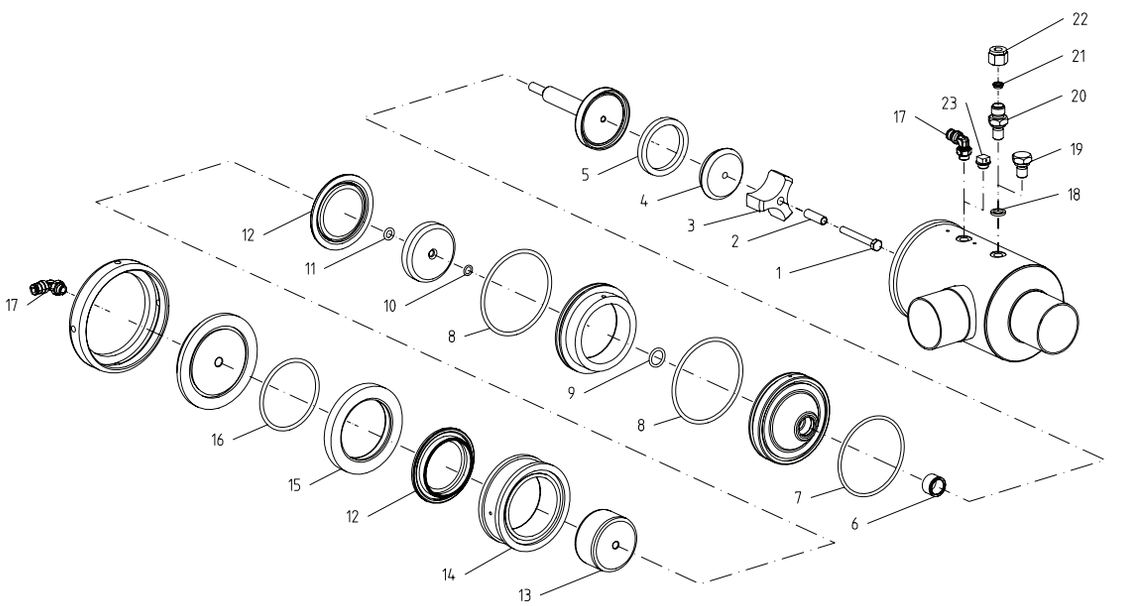

Pos		Qty	Denomination	38mm	51mm
1		1	Screw	9611995582	9611995579
2		1	Bushing	9615092001	9615090301
3		1	Guide Fin	9615091901	9615089101
4		1	Disc	9615091801	9615089001
5	□	1	Gasket, EPDM		
6	□	1	Variseal		
7	□	1	O-ring, EPDM		
8	□	2	O-ring, NBR		
9	□	1	O-ring, NBR		
10	□	1	O-ring, NBR		
11	□	1	O-ring, NBR		
12		2	Diaphragm	9611995581	9611995578
13		1	Support for Diaphragm	9615092701	9615089501
14		1	Intermediate Lining for Diaphragm	9615092501	9615083101
15		1	Upper Lining for Diaphragm	9615092801	9615089601
16	□	1	O-ring, NBR		
17		2	Air Inlet	9611991988	9611991988
18		1	Washer	9611995575	9611995575
19		1	Plug	9615092101	9615090001
20		1	CIP Nozzle	9615092201	9615089901
21		1	Ferrule Set	9611995506	9611995506
22		1	Nut	9611995505	9611995505
23		1	Water Rejector	9613414101	9613414101

		38mm	51mm
Service kits for Pressure Exhaust; 38 - 51mm			
□	**Service Kit**	**9611924318**	**9611924319**

Parts marked with □ are included in the service kits.

1.9

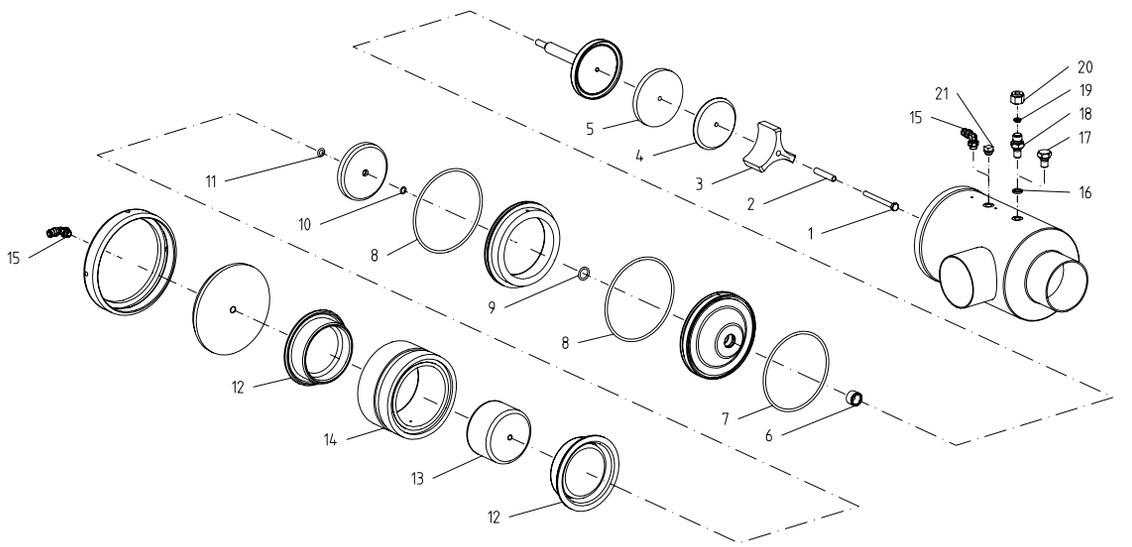

Pos		Qty	Denomination	76.1mm
1		1	Screw	9611995573
2		1	Bushing	9615087801
3		1	Guide Fin	9615082801
4		1	Disc	9615068701
5	□	1	Gasket, EPDM	
6	□	1	Variseal	
7	□	1	O-ring, EPDM	
8	□	2	O-ring, NBR	
9	□	1	O-ring, NBR	
10	□	1	O-ring, NBR	
11	□	1	O-ring, NBR	
12		2	Diaphragm	9611995574
13		1	Support for Diaphragm	9615086001
14		1	Intermediate Lining for Diaphragm	9615085901
15		2	Air Inlet	9611991988
16		1	Washer	9611995575
17		1	Plug	9615090001
18		1	Cip Nozzle	9615089901
19		1	Ferrule Set	9611995506
20		1	Nut	9611995505
21		1	Water Rejector	9613414101

	76.1mm

Service kits for Pressure Exhaust, 76,1mm

□	**Service Kit**	**9611924320**

Parts marked with □ are included in the service kits.

1.9

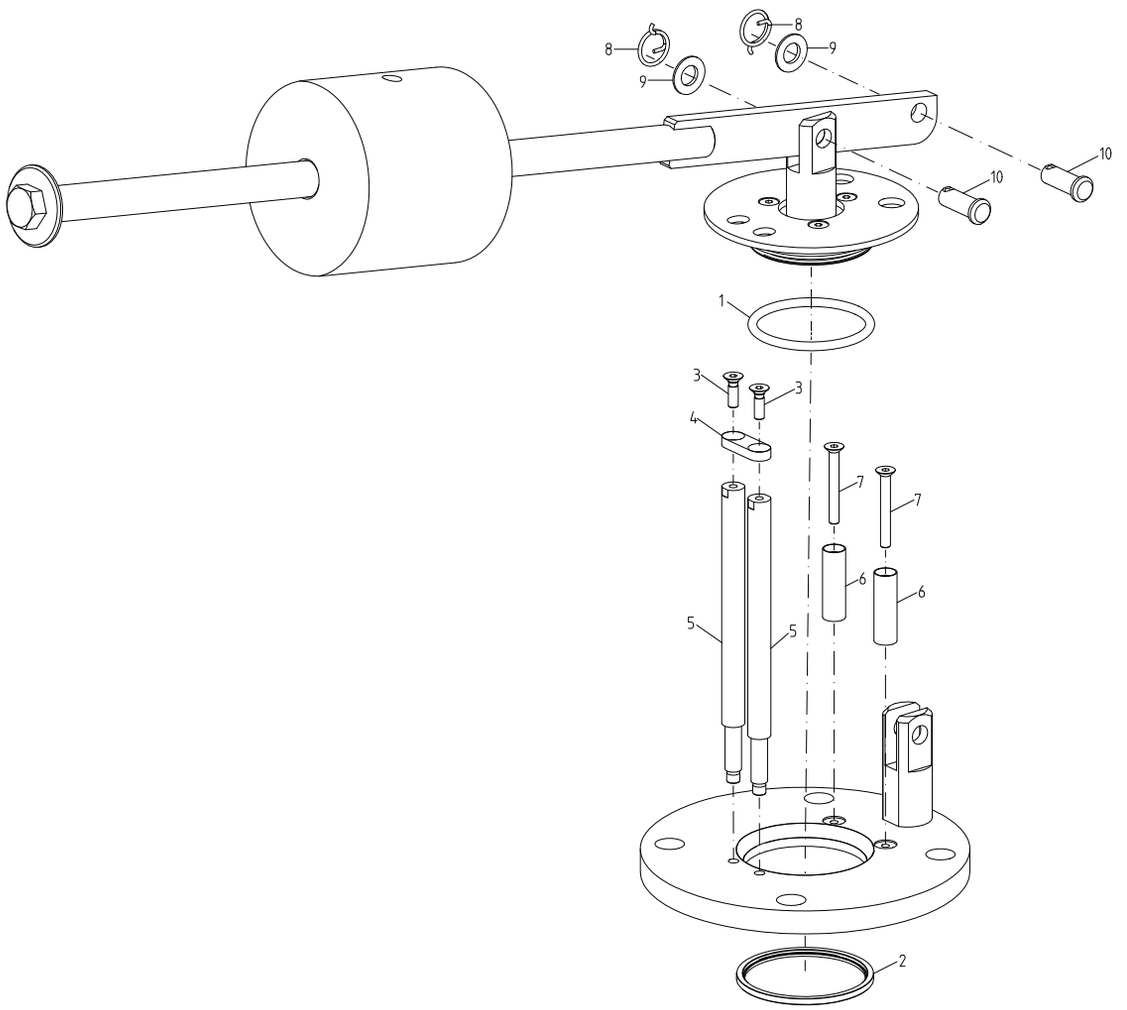

Pos		Qty	Denomination	Ø75	Ø100	Ø150
1		1	O-ring, EPDM	9611995464	9611995465	9611995466
2		1	Gasket, EPDM	9612402635	9612402607	9612402609
3	□	2	Screw			
4	□	1	P.R.V. guide stop Ø75/3"-Ø100/4"			
4	□	1	P.R.V. guide stop Ø150/6"			
5	□	2	P.R.V. guide pin			
6	□	2	P.R.V. guide pin small			
7	□	2	Screw			
8	♦	2	Locking ring			
9	♦	2	Washer			
10	♦	2	Bearing tap			

Assembly kits for Ø75 to Ø150

□	Assembly kit, PRV	9615145904
♦	Assembly kit, PRV	9615145808

Parts marked with □♦ are included in the assembly kits.

1.9

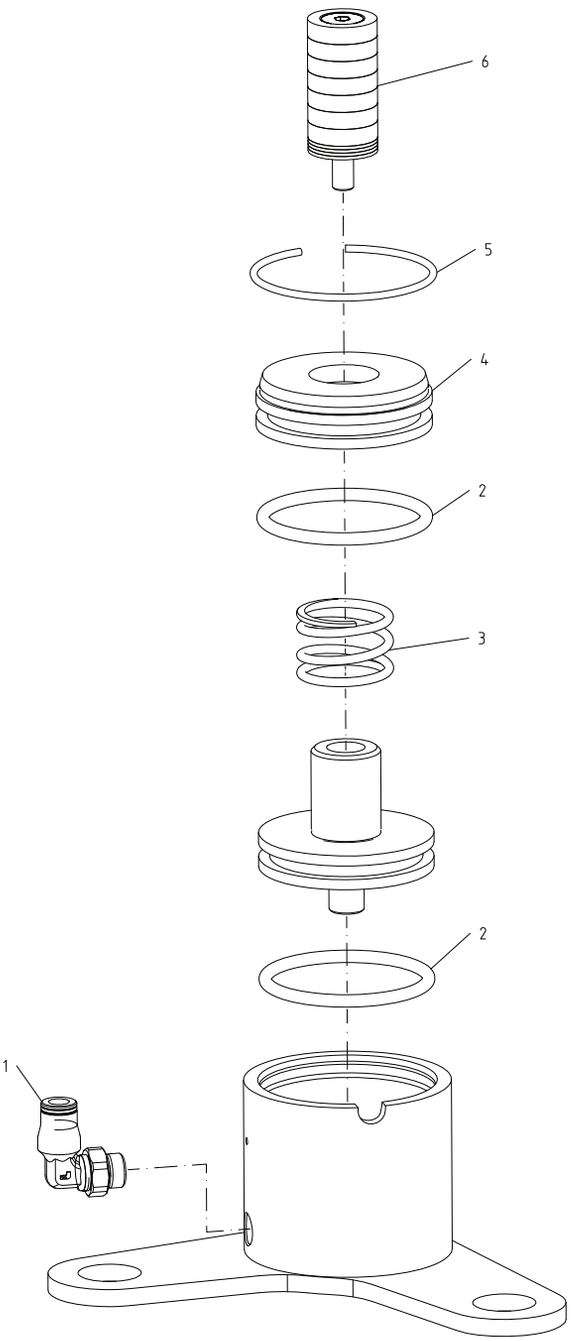

Pos		Qty	Denomination	Ø75 to Ø150
1		1	Air fitting	9611991988
2		2	O-ring, NBR	9611995509
3	○	1	Spring	
4	○	1	Force opener cover	
5	○	1	Locking ring	
6	○	1	Spacer kit	

Assembly kits for Ø75 to Ø150

○	**Assembly Kit, force opener**	**9615146201**

Parts marked with ○ are included in the assembly kits.

1.9

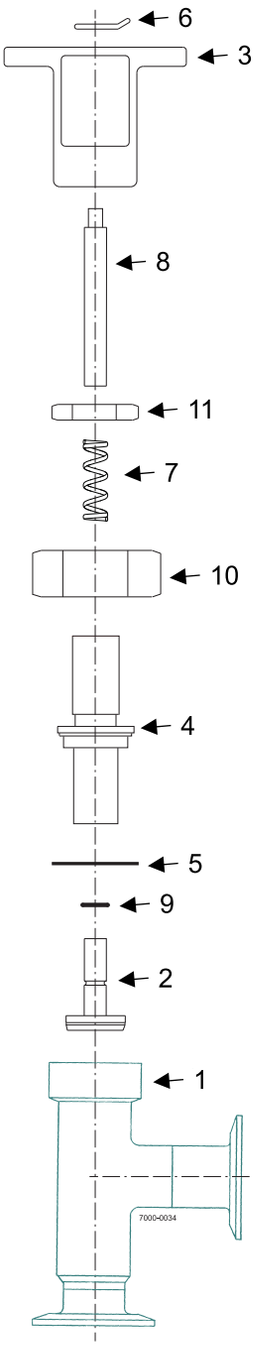

Pos		Qty	Denomination	1”	1 1/2”	2”	2 1/2”	3”
1		1	Body	NA	NA	NA	NA	NA
2		1	Stem	620406	620408	620412	620416	620418
3		1	Handle	720756	722115	722115	724287	724287
4		1	Bonnet	620130	622246	623192	620003	620646
5	□	1	Gasket	299013	299014	299015	299016	299017
6		1	Clip	628530	628531	628531	628531	628531
7		1	Spring	620929	622256	623489	624403	625388
			Standard Spring Pressure Range (psi)	5-15	5-25	5-25	5-25	5-25
8		1	Adj Stem	620233	620243	620243	620355	620375
9	□	1	O ring, BUNA	299056	299057	299057	299057	299060
	♦	1	O ring, SFY	290011	290010	290010	290010	290161
10		1	Hex Nut	010221	011250	012350	013236	014265
11		1	Lock Nut	020170	622204	622204	622205	622205
Additional Spring Ranges								
7		1	Spring , (A)	620933	622258	623482	624391	625383
			Pressure Range (psi)	20-35	20-35	20-35	20-35	25-45
7		1	Spring, (B)	620935	622248	623491	624410	625961
			Pressure Range (psi)	30-50	30-50	30-50	40-60	40-60
7		1	Spring, (C)	620936	622245	624116	---	---
			Pressure Range (psi)	40-60	2-8	50-70		
7		1	Spring, (D)	620939	622244	629645	---	625415
			Pressure Range (psi)	60-75	75-85	85		75
7		1	Spring, (E)	---	622241	---	---	---
			Pressure Range (psi)		50-75			

Parts marked with □♦ are included in the service kits.

		1”	1 1/2”	2”	2 1/2”	3”
□	Service Kit BUNA	9613990626	9613990628	9613990630	9613990632	9613990634
♦	Service Kit SFY	9613990627	9613990629	9613990631	9613990633	9613990635

1.9

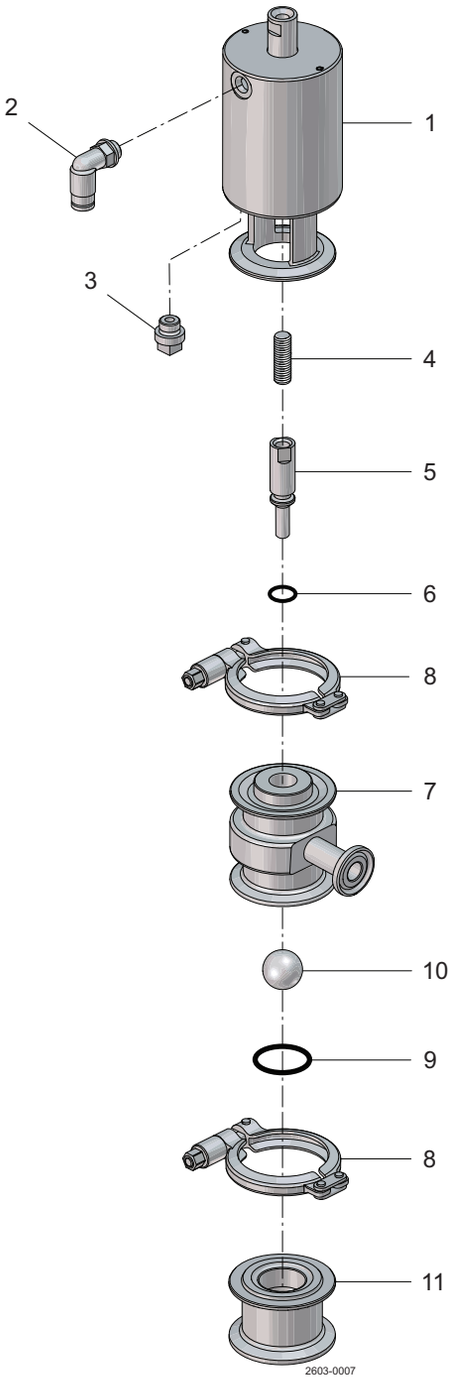

Pos		Qty	Denomination	
1		1	Actuator , NO, blasted	9612940404
2		1	Air fitting, (6 mm tubing)	9611991988
		1	Air fitting, (BSP 1/4” tubing)	9611994682
3		1	Plug	9613414101
4		1	Stud	9634083501
5		1	Stem	9634083101
6	□	1	O-ring, EPDM	9634098302
7		1	Body	9634083301
8		2	Clamp	9612939301
9	□	1	O-ring, EPDM	751956
10	□	1	Ball	9634083001
11		1	Base	9634083401

1.9

Service kits

	Service kits for actuator	**9611926323**
□	**Service kit, EPDM**	**9636000198**

1.10 Sampling valves

Our sampling equipment ranges from basic sample valves to premium quality valves, providing the ultimate in sterile and aseptic sampling.



Unique Sampling Valve

Unique Sampling Valve, actuator size 4, double seat 1.10.902
Unique Sampling Valve, actuator size 4, single seat 1.10.904
Unique Sampling Valve, actuator size 10, double seat 1.10.906
Unique Sampling Valve, actuator size 10, single seat 1.10.908
Unique Sampling Valve, actuator size 25, double seat 1.10.910
Unique Sampling Valve, actuator size 25, single seat 1.10.912
Unique Sampling Valve, manual handle for valve size 4, double seat 1.10.914
Unique Sampling Valve, manual handle for valve size 4, single seat 1.10.916
Unique Sampling Valve, manual handle for valve size 10, double seat 1.10.918
Unique Sampling Valve, manual handle for valve size 10, single seat 1.10.920
Unique Sampling Valve, accessories, non return valve, sizes 4, 10, 25 . . . . 1.10.922
Unique Sampling Valve, accessories, quick connection, sizes 4, 10 . . . . . 1.10.924
Unique Sampling Valve, accessories, male quick connection 1.10.926
Unique Sampling Valve, accessories, female quick connection 1.10.928
Unique Sampling Valve, accessories, pressure relief valve, sizes 4, 10 . . . . 1.10.930
Unique Sampling Valve, accessories, pressure relief valve, size 25 . . . . . 1.10.932

Spare parts

Sampling Valve, type 20 . . . . . 1.10.934
SB Membrane Sampling Valve, manual 1.10.936
SB Membrane Sampling Valve, manual + micro port 1.10.938
SB Membrane Sampling Valve, pneumatic 1.10.940
SB Micro Sampling Port 1.10.942
SB Micro Sampling Port, type M 1.10.944
SB Carlsberg Flask PED 1.10.946
A30SA Sampling Valve 1.10.948
A30SMP Sampling Valve 1.10.950

1.10 Sampling valves

Our sampling equipment ranges from basic sample valves to premium quality valves, providing the ultimate in sterile and aseptic sampling.

660 Fractional Valve 1.10.952

Spare parts for obsolete products
Keofitt Aseptic Membrane Sampling Valve 1.10.954
Unique Sampling Valve, accessories, steam generator 1.10.956
Sampling Valve, type 32 . . . . . 1.10.960

1.10

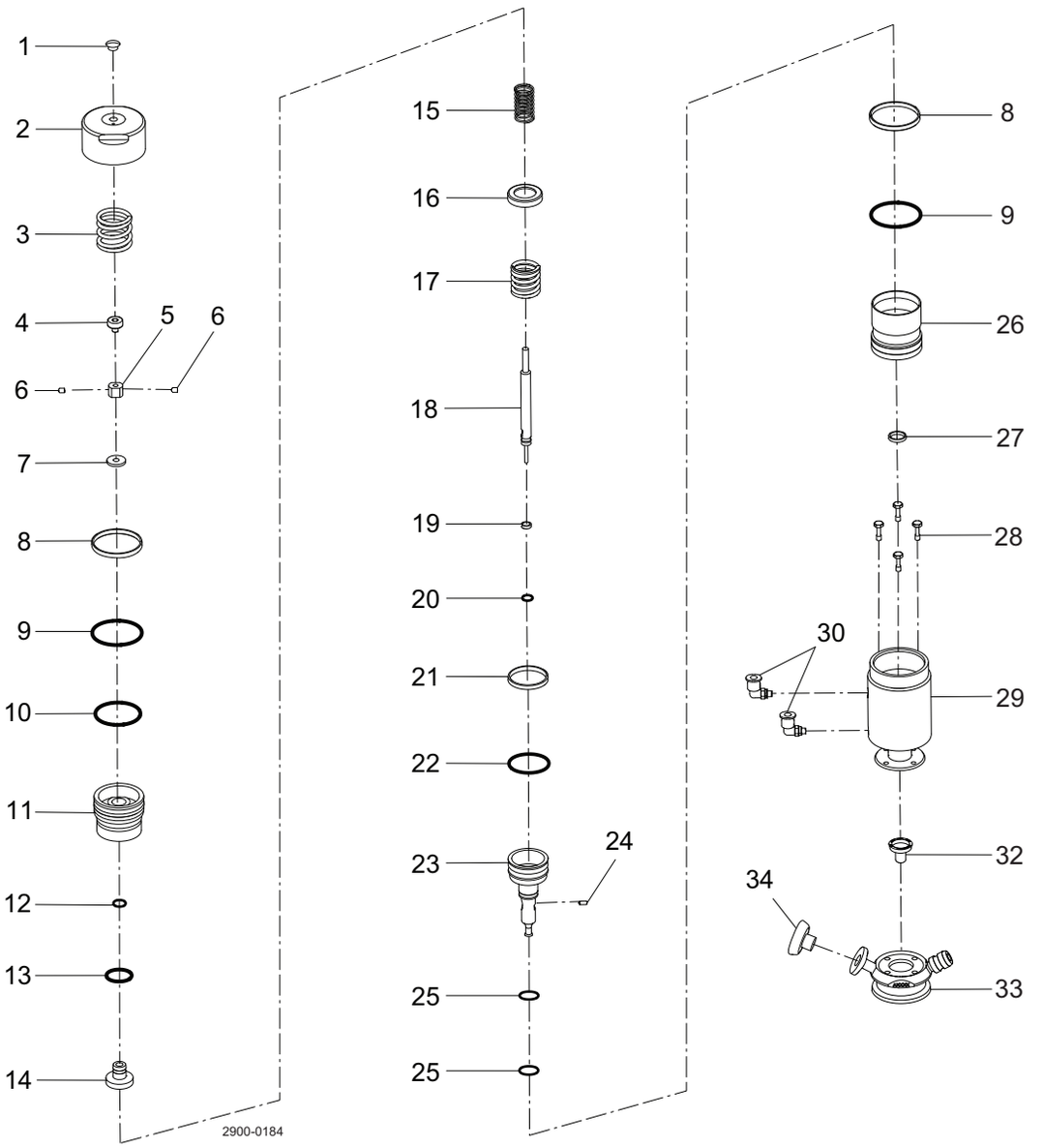
1
2
3
4
5
6
6
7
8
9
10
11
12
13
14
15
16
17
18
19
20
21
22
23
24
25
25
8
9
26
27
28
30
29
32
34
33
2900-0184

Pos		Qty	Denomination	Size 4
			Actuator	9614019201
1		1	Top plug	9611995067
2		1	Actuator top	9614023601
3		1	Spring	9614016205
4		1	Adjuster screw	9614015601
5		1	Adjuster nut	9614015201
6	▲	2	Set screw	
7		1	Disc	9614017801
8		2	Guide ring	9614071915
9	▲	2	O-ring	
10	▲	1	O-ring	
11		1	Main piston top	9614020701
12	▲	1	O-ring	
13	▲	1	O-ring	
14		1	Inner seat lift piston	9614020501
15		1	Spring	9614016206
16		1	Spring disc	9614018001
17		1	Spring	9614016207
18		1	Inner stem	9614023701
19		1	Guide ring	9614071919
20	▲	1	O-ring	
21		1	Guide ring	9614071916
22	▲	1	O-ring	
23		1	Outer seat lift piston	9614023501
24	▲	1	Pin	
25	▲	2	O-ring	
26		1	Main piston bottom	9614020601
27		1	Guide ring	9614071918
28		4	Mount screws	9614026001
29		1	Actuator body	
30		2	Air fitting angle	9611995055

Pos	Qty	Denomination	Size 4
Membrane			
32	10	Membrane seal, EPDM, 10 pieces, for serial numbers Axxxx	9614016501
	10	Membrane seal, Silicone, 10 pieces, for serial numbers Axxxx	9614016551
	10	Membrane seal, EPDM, 10 pieces, for serial numbers Sxxxx	
	10	Membrane seal, Silicone, 10 pieces, for serial numbers Sxxxx	9614018951

Pos	Qty	Denomination	Size 4
Valve body			
33	1	Valve body, tank	9614022801
	1	Valve body, Tri-clamp	9614094601
	1	Valve body, collard pipe ISO 25	9614089301
	1	Valve body, collard pipe ISO 38t	9614073501
	1	Valve body, collard pipe ISO 51	9614073701
	1	Valve body, collard pipe DIN DN 25	9614089401
	1	Valve body, collard pipe DIN DN 40	9614073601
	1	Valve body, collard pipe DIN DN 50	9614073801
34	1	Plug for upper connection, EPDM	9614290501

		Size 4
Service kit		
▲	**Service kit**	**9611924303**

900-682/2

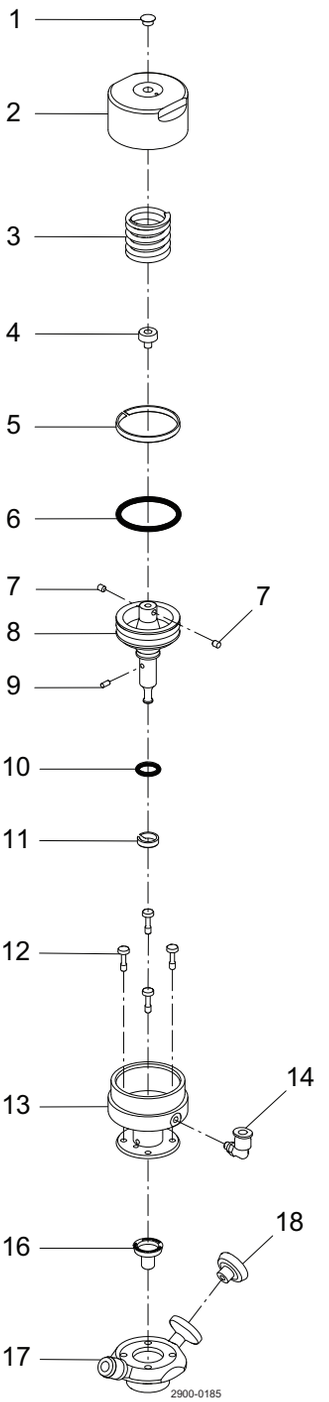
1
2
3
4
5
6
7
7
8
9
10
11
12
13
14
16
18
17
2900-0185

Pneumatic actuator Size 4 Single Seat

Pos		Qty	Denomination	Size 4
			Actuator	9614027101
1		1	Top plug	9611995067
2		1	Actuator top	9614023601
3		1	Spring	9614016205
4		1	Adjuster screw	9614015601
5		1	Guide ring	9614071915
6	▲	1	O-ring	
7	▲	2	Set screw	
8		1	Main piston	9614025601
9	▲	1	Pin	
10	▲	1	O-ring	
11		1	Guide ring	9614071918
12		4	Mount screws	9614026001
13		1	Actuator body	
14		1	Air fitting angle	9611995055

Pos	Qty	Denomination	Size 4
Membrane			
16	10	Membrane seal , EPDM, 10 pieces, for serial numbers Axxxx	9614016501
	10	Membrane seal, Silicone, 10 pieces, for serial numbers Axxxx	9614016551
	10	Membrane seal, EPDM, 10 pieces, for serial numbers Sxxxx	
	10	Membrane seal, Silicone, 10 pieces, for serial numbers Sxxxx	9614018951

Pos	Qty	Denomination	Size 4
Valve body			
17	1	Valve body, tank	9614022801
	1	Valve body, Tri-clamp	9614094601
	1	Valve body, collard pipe ISO 25	9614089301
	1	Valve body, collard pipe ISO 38	9614073501
	1	Valve body, collard pipe ISO 51	9614073701
	1	Valve body, collard pipe DIN DN 25	9614089401
	1	Valve body, collard pipe DIN DN 40	9614073601
	1	Valve body, collard pipe DIN DN 50	9614073801
18	1	Plug for upper connection, EPDM	9614290501

		Size 4
Service kit		
▲	**Service kit**	**9611924304**

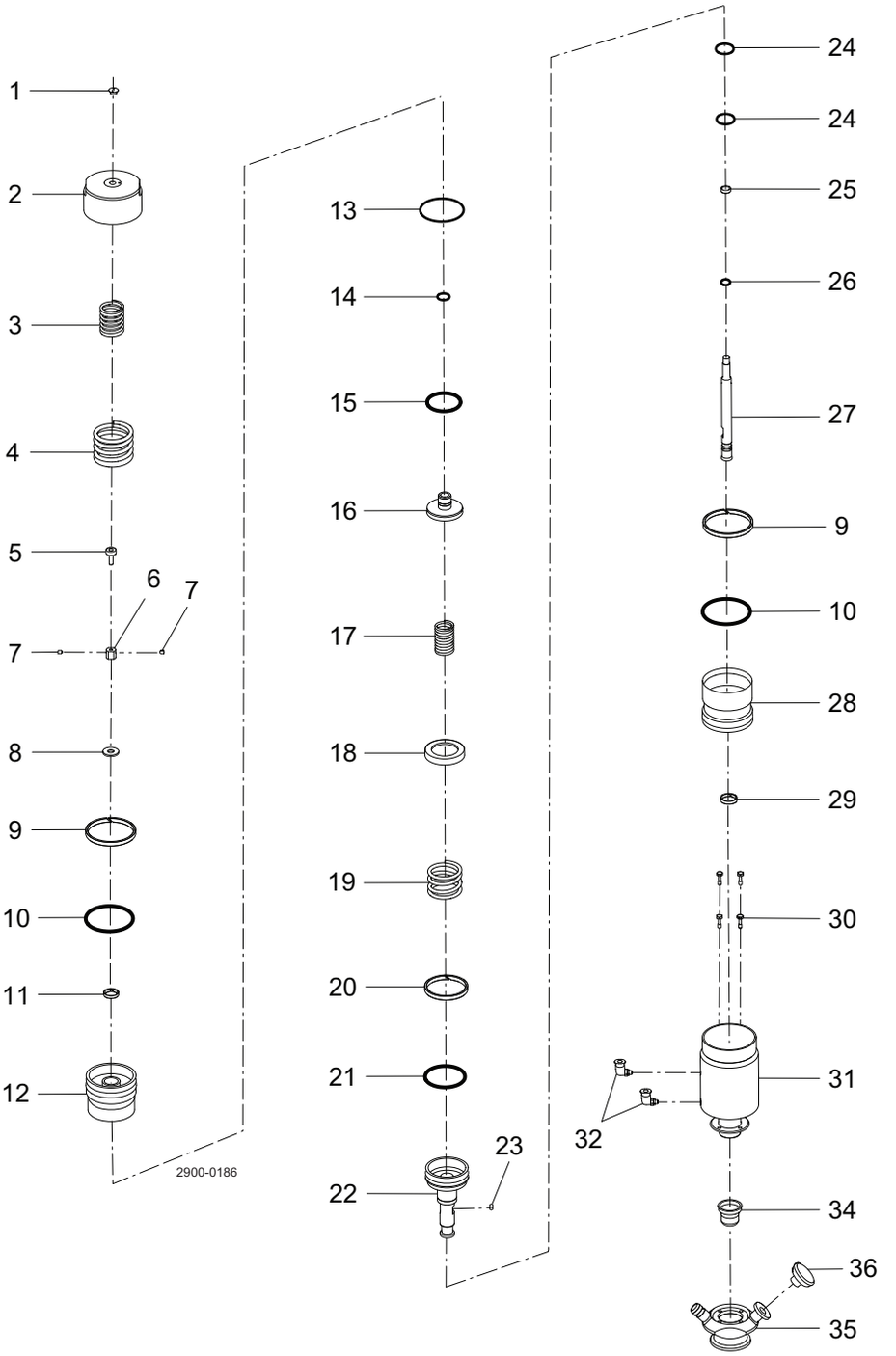
1
2
3
4
5
6
7
7
8
9
10
11
12
2900-0186
13
14
15
16
17
18
19
20
21
22
23
24
24
25
26
27
9
10
28
29
30
31
32
34
36
35

Pos		Qty	Denomination	Size 10
			Actuator	9614018601
1		1	Top plug	9611995067
2		1	Actuator top	9614016401
3		1	Spring	9614016202
4		1	Spring	9614016201
5		1	Adjuster screw	9614018501
6		1	Adjuster nut	9614019401
7	▲	2	Set screw	
8		1	Disc	9614016301
9		2	Guide ring	9614071906
10	▲	2	O-ring	
11		1	Guide ring	9614071909
12		1	Main piston top	9614057201
13	▲	1	O-ring	
14	▲	1	O-ring	
15	▲	1	O-ring	
16		1	Inner seat lift piston	9614017101
17		1	Spring	9614016203
18		1	Spring disc	9614017201
19		1	Spring	9614016204
20		1	Guide ring	9614071908
21	▲	1	O-ring	
22		1	Outer seat lift piston	9614017001
23	▲	1	Pin	
24	▲	2	O-ring	
25		1	Guide ring	9614071910
26	▲	1	O-ring	
27		1	Inner stem	9614016801
28		1	Main piston bottom	9614016601
29		1	Guide ring	9614071907
30		4	Mount screws	9614026001
31		1	Actuator body	
32		2	Air fitting angle	9611995055

Pos	Qty	Denomination	Size 10
Membrane			
34	10	Membrane seal, EPDM, 10 pieces	9614018801
	10	Membrane seal, Silicone, 10 pieces	9614018851

Pos	Qty	Denomination	Size 10
Valve body			
35	1	Valve body, tank	9614089601
	1	Valve body, Tri-clamp	9614089501
	1	Valve body, collard pipe ISO 25	9614073901
	1	Valve body, collard pipe ISO 38	9614089701
	1	Valve body, collard pipe ISO 51	9614074101
	1	Valve body, collard pipe DIN DN 25	9614074001
	1	Valve body, collard pipe DIN DN 40	9614089801
	1	Valve body, collard pipe DIN DN 50	9614074201
36	1	Plug for upper connection, EPDM	9614290501

	Size 10
Service kit	
▲ Service kit	**9611924305**

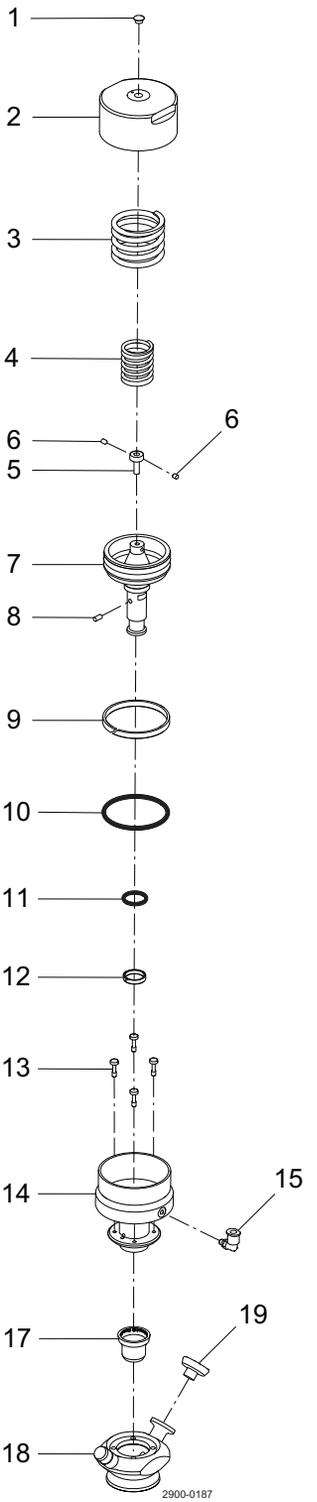
1
2
3
4
6
6
5
7
8
9
10
11
12
13
14
15
17
19
18
2900-0187

Pos		Qty	Denomination	
Actuator				
			Actuator	9614018701
1		1	Top plug	9611995067
2		1	Actuator top	9614016401
3		1	Spring	9614016201
4		1	Spring	9614016202
5		1	Adjuster screw	9614018501
6	▲	2	Set screw	
7		1	Main piston	9614017901
8	▲	1	Pin	
9		1	Guide ring	9614071906
10	▲	1	O-ring	
11	▲	1	O-ring	
12		1	Guide ring	9614071907
13		4	Mount screws	9614026001
14		1	Actuator body	
15		1	Aiir fitting angle	9611995055
Membrane				
17		10	Membrane seal, EPDM, 10 pieces	9614018801
		10	Membrane seal, silicone, 10 pieces	9614018851
Valve body				
18		1	Valve body, tank	9614089601
		1	Valve body, Tri-clamp	9614089501
		1	Valve body, collard pipe ISO 25	9614073901
		1	Valve body, collard pipe ISO 38	9614089701
		1	Valve body, collard pipeISO 51	9614074101
		1	Valve body, collard pipe DIN DN 25	9614074001
		1	Valve body, collard pipe DIN DN 40	9614089801
		1	Valve body, collard pipe DIN DN 50	9614074201
19		1	Plug for upper connection, EPDM	9614290501

Service kit

▲		**Service kit**	**9611924309**

1.10

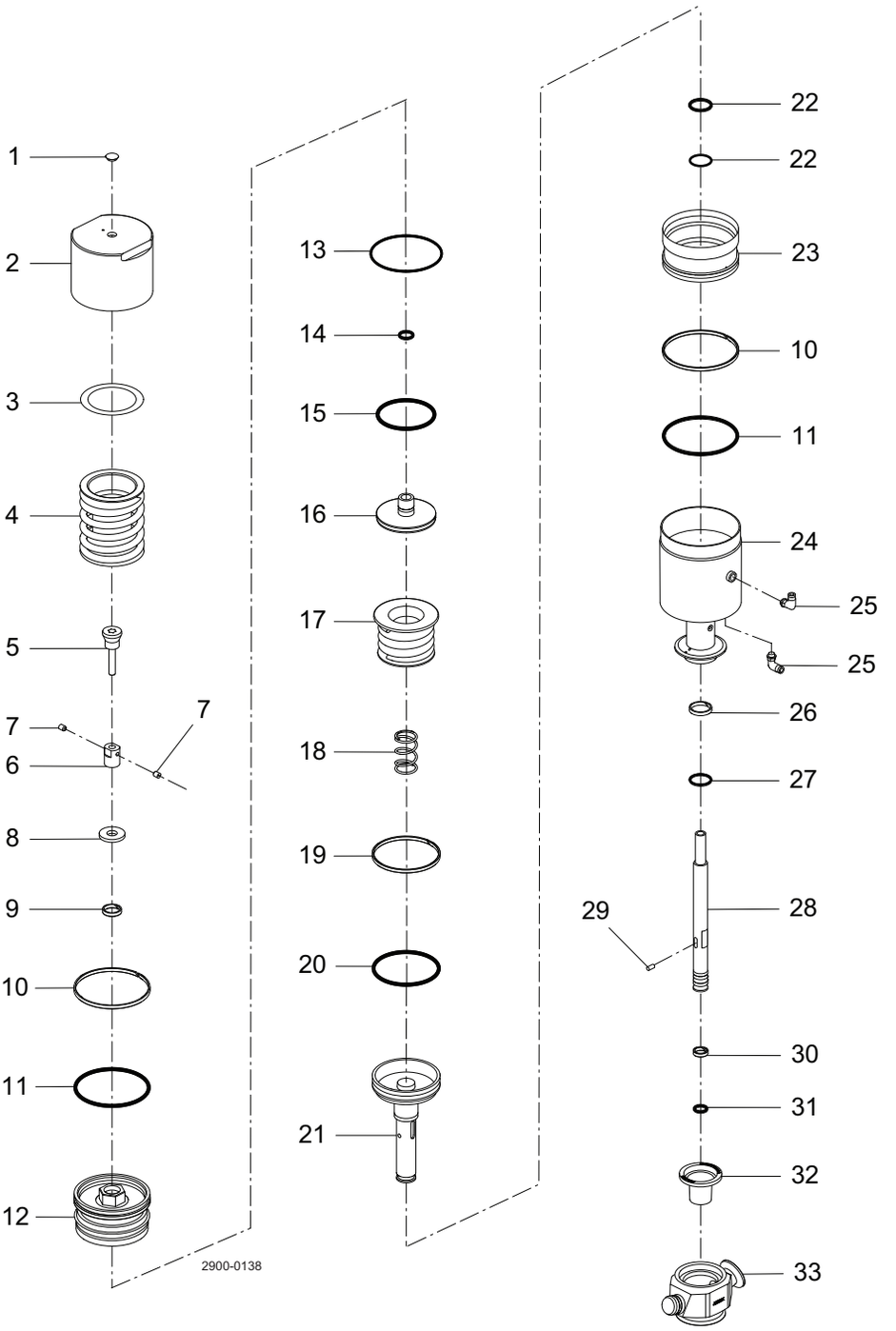
1
2
3
4
5
7
7
6
8
9
10
11
12
2900-0138
13
14
15
16
17
18
19
20
21
22
22
23
10
11
24
25
25
26
27
29
28
30
31
32
33

Pos		Qty	Denomination	
Actuator				
			Actuator	9614019301
1		1	Top plug	9611995398
2		1	Actuator top	9614035201
3		1	PTFE disc	9614217701
4		1	Spring	9613132502
5		1	Adjuster screw	9614036101
6		1	Nut for adjustment	9614035101
7	▲	2	Set screw	
8		1	Disc	9614035501
9		1	Guide ring	9614071923
10		2	Guide ring	9614071920
11	▲	2	O-ring	
12		1	Upper piston	9614034801
13	▲	1	O-ring	
14	▲	1	O-ring	
15	▲	1	O-ring	
16		1	Inner piston	9614034601
17		1	Spring cage	9614035701
18		1	Spring	9614016213
19		1	Guide ring	9614071921
20	▲	1	O-ring	
21		1	Outer stem	9614034901
22	▲	2	O-ring	
23		1	Lower piston	9614034701
24		1	Actuator body	
25		2	Air fitting	9611991988
26		1	Guide ring	9614071922
27	▲	1	O-ring	
28		1	Inner stem	9614035001
29	▲	1	Pin	
30		1	Guide ring	9614071924
31	▲	1	O-ring	
Membrane				
32		10	Membrane seal, EPDM, 10 pcs.	9614019001
		10	Membrane seal, silicone, 10 pcs.	9614019051
Valve body				
33		1	Valve body, tank	9614022201
		1	Valve body, Tri-clamp	9614073401
		1	Valve body, collard pipe ISO 51	9614074301
		1	Valve body, collard pipe ISO 63.5	9614077201
		1	Valve body, collard pipe DIN DN50	9614074401
		1	Valve body, collard pipe DIN DN65	9614077301

Service kit

▲	**Service kit**	**9611924310**

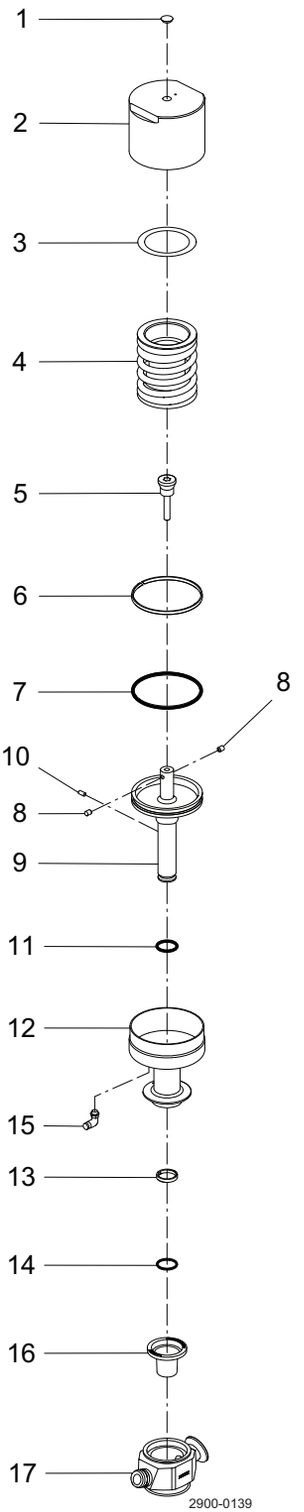
1
2
3
4
5
6
7
8
10
8
9
11
12
15
13
14
16
17
2900-0139

Pos		Qty	Denomination	
Actuator				
			Actuator	9614021301
1		1	Top plug	9611995398
2		1	Actuator top	9614035201
3		1	PTFE disc	9614217701
4		1	Spring	9613132502
5		1	Adjuster screw	9614036101
6		1	Guide ring	9614071920
7	▲	1	O-ring	
8	▲	2	Set screw	
9		1	Main piston	9614036001
10	▲	1	Pin	
11	▲	1	O-ring	
12		1	Actuator body	
13		1	Guide ring	9614071922
14	▲	1	O-ring	
15		1	Air fitting	9611991988
Membrane				
16		10	Membrane seal, EPDM, 10 pcs.	9614019001
		10	Membrane seal, silicone, 10 pcs.	9614019051
Valve body				
17		1	Valve body, tank	9614022201
		1	Valve body, Tri-clamp	9614073401
		1	Valve body, collard pipe ISO 51	9614074301
		1	Valve body, collard pipe ISO 63.5	9614077201
		1	Valve body, collard pipe DIN DN 50	9614074401
		1	Valve body, collard pipe DIN DN 65	9614077301

Service kit

▲	**Service kit**	**9611924311**

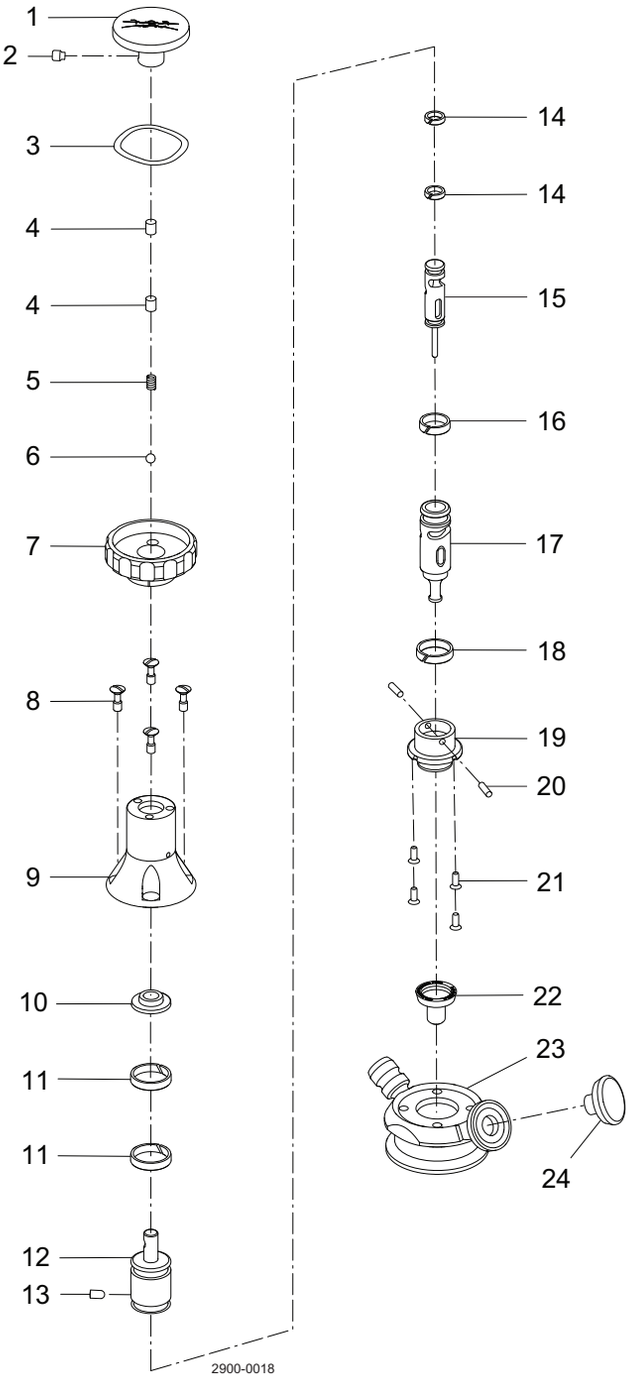
1
2
3
4
4
5
6
7
8
9
10
11
11
12
13
14
14
15
16
17
18
19
20
21
22
23
24
2900-0018

Pos	Qty	Denomination	Size 4
Manual actuator Size 4 Double Seat			
		Actuator	9614019101
1	1	Drive handle	
2	1	Pin screw	
3	1	Wave spring	
4	2	Pin	
5	1	Spring	
6	1	Ball	
7	1	Handle	
8	1	Mounting screw, set of 4 pcs.	9614022902
9	1	Actuator body	
10	1	Spacer	
11	2	Guide ring	
12	1	Piston drive	
13	1	Guide pin	
14	2	Guide ring	
15	1	Inner piston	
16	1	Guide ring	
17	1	Outer piston	
18	1	Guide ring	
19	1	Actuator bottom	
20	2	Pin	
21	4	Screws	

Pos	Qty	Denomination	Size 4
Membrane			
22	10	Membrane seal, EPDM, 10 pieces, for serial numbers Axxxx	9614016501
	10	Membrane seal, Silicone, 10 pieces, for serial numbers Axxxx	9614016551
	10	Membrane seal, EPDM, 10 pieces, for serial numbers Sxxxx	
	10	Membrane seal, Silicone, 10 pieces, for serial numbers Sxxxx	9614018951

Pos	Qty	Denomination	Size 4
Valve Boby			
23	1	Valve body, Tank	9614022801
	1	Valve body, Tri-clamp	9614094601
	1	Valve body, collard pipe ISO 25	9614089301
	1	Valve body, collard pipe ISO 38	9614073501
	1	Valve body, collard pipe ISO 51	9614073701
	1	Valve body, collard pipe DIN DN 25	9614089401
	1	Valve body, collard pipe DIN DN 40	9614073601
	1	Valve body, collard pipe DIN DN 50	9614073801
24	1	Plug for upper connection, EPDM	9614290501

1.10

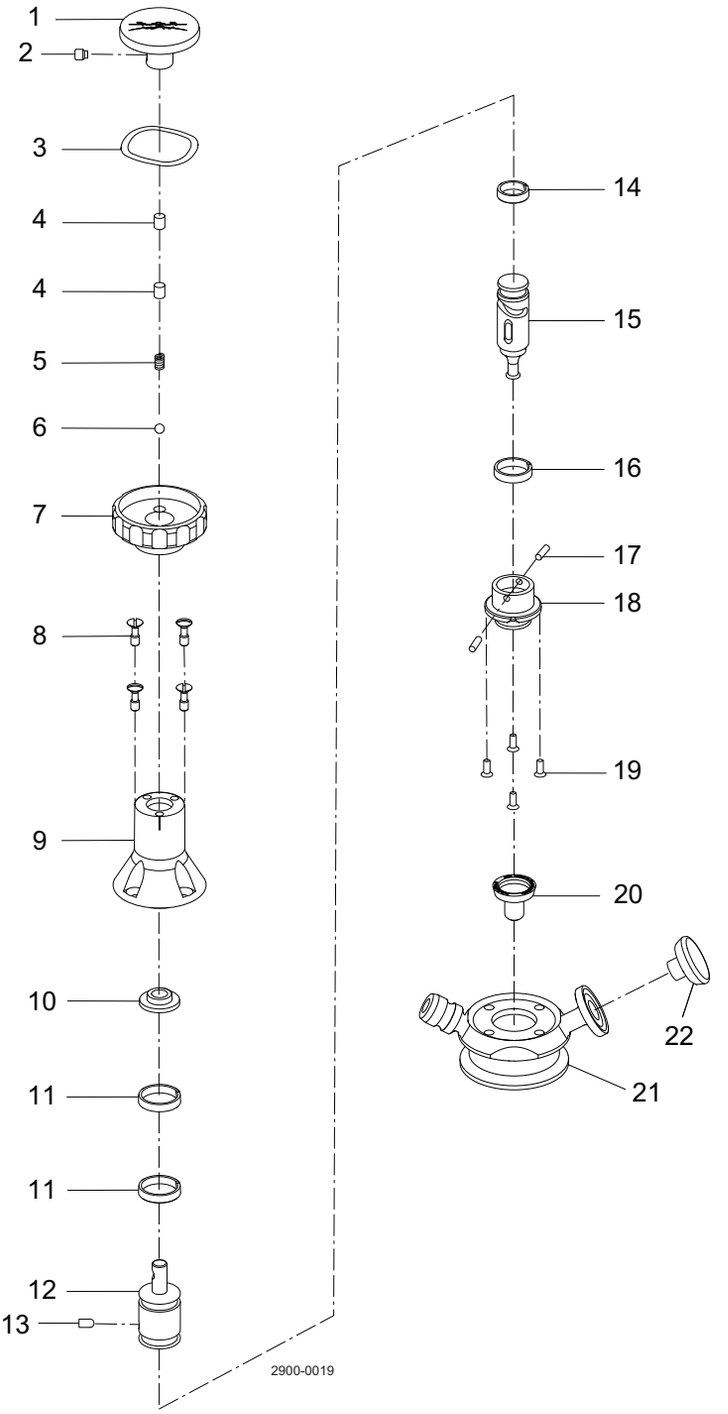

Pos	Qty	Denomination	Size 4
Manual actuator Size 4 Single Seat			
		Actuator	9614022601
1	1	Drive handle	
2	1	Pin screw	
3	1	Wave spring	
4	2	Pin	
5	1	Spring	
6	1	Ball	
7	1	Handle	
8	1	Mounting screw, set of 4 pcs.	9614022902
9	1	Actuator body	
10	1	Spacer	
11	2	Guide ring	
12	1	Piston drive	
13	1	Guide pin	
14	1	Guide ring	
15	1	Piston	
16	1	Guide ring	
17	2	Pin	
18	1	Actuator bottom	
19	4	Screws	

Pos	Qty	Denomination	Size 4
Membrane			
20	10	Membrane seal, EPDM, 10 pieces, for serial numbers Axxxx	9614016501
	10	Membrane seal, Silicone, 10 pieces, for serial numbers Axxxx	9614016551
	10	Membrane seal, EPDM, 10 pieces, for serial numbers Sxxxx	
	10	Membrane seal, Silicone, 10 pieces, for serial numbers Sxxxx	9614018951

Pos	Qty	Denomination	Size 4
Valve Body			
21	1	Valve body, Tank	9614022801
	1	Valve body, Tri-clamp	9614094601
	1	Valve body, collard pipe ISO 25	9614089301
	1	Valve body, collard pipe ISO 38	9614073501
	1	Valve body, collard pipe ISO 51	9614073701
	1	Valve body, collard pipe DIN DN 25	9614089401
	1	Valve body, collard pipe DIN DN 40	9614073601
	1	Valve body, collard pipe DIN DN 50	9614073801
22	1	Plug for upper connection, EPDM	9614290501

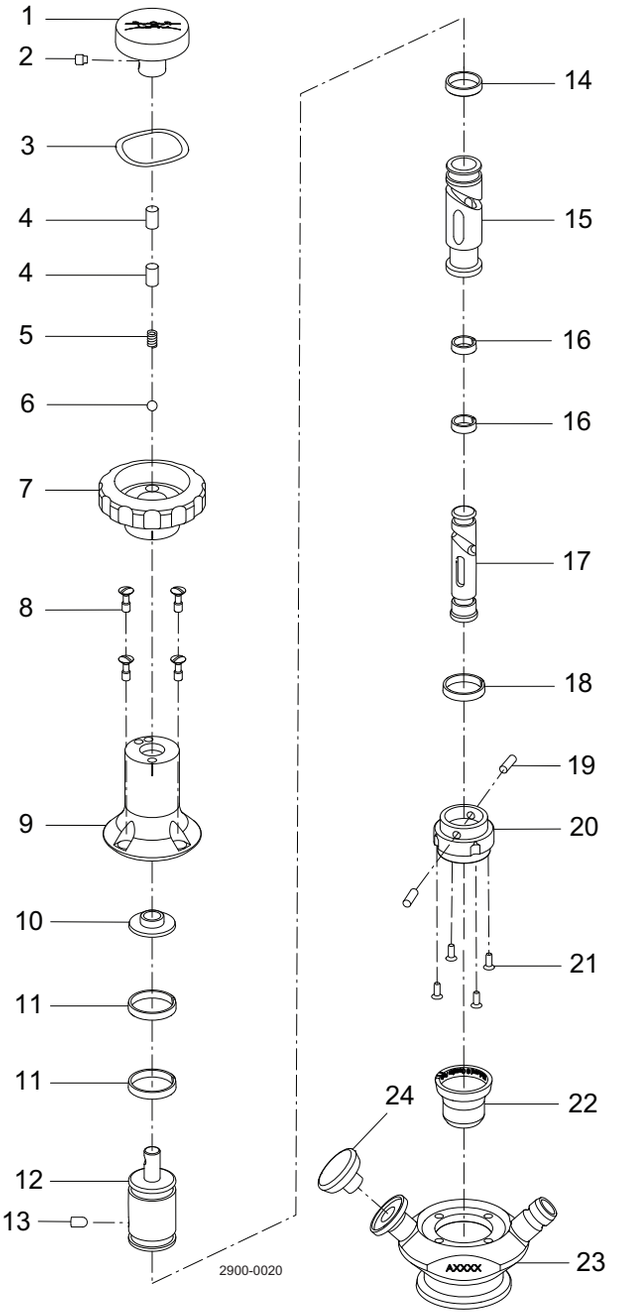
1
2
3
4
4
5
6
7
8
9
10
11
11
12
13
14
15
16
16
17
18
19
20
21
22
24
23
AXXXX
2900-0020

Pos	Qty	Denomination	Size 10
Manual actuator Size 10 Double Seat			
		Actuator	9614018201
1	1	Drive handle	
2	1	Pin screw	
3	1	Wave spring	
4	2	Pin	
5	1	Spring	
6	1	Ball	
7	1	Handle	
8	1	Mounting screw, set of 4 pcs.	9614022902
9	1	Actuator body	
10	1	Spacer	
11	2	Guide ring	
12	1	Piston drive	
13	1	Guide pin	
14	1	Guide ring	
15	1	Outer piston	
16	2	Guide ring	
17	1	Inner piston	
18	1	Guide ring	
19	2	Pin	
20	1	Actuator bottom	
21	4	Screws	

Pos	Qty	Denomination	Size 10
Membrane			
22	10	Membrane seal, EPDM, 10 pieces	9614018801
	10	Membrane seal, Silicone, 10 pieces	9614018851

Pos	Qty	Denomination	Size 10
Valve Body			
23	1	Valve body, Tank	9614089601
	1	Valve body, Tri-clamp	9614089501
	1	Valve body, collard pipe ISO 25	9614073901
	1	Valve body, collard pipe ISO 38	9614089701
	1	Valve body, collard pipe ISO 51	9614074101
	1	Valve body, collard pipe DIN DN 25	9614074001
	1	Valve body, collard pipe DIN DN 40	9614089801
	1	Valve body, collard pipe DIN DN 50	9614074201
24	1	Plug for upper connection, EPDM	9614290501

1.10

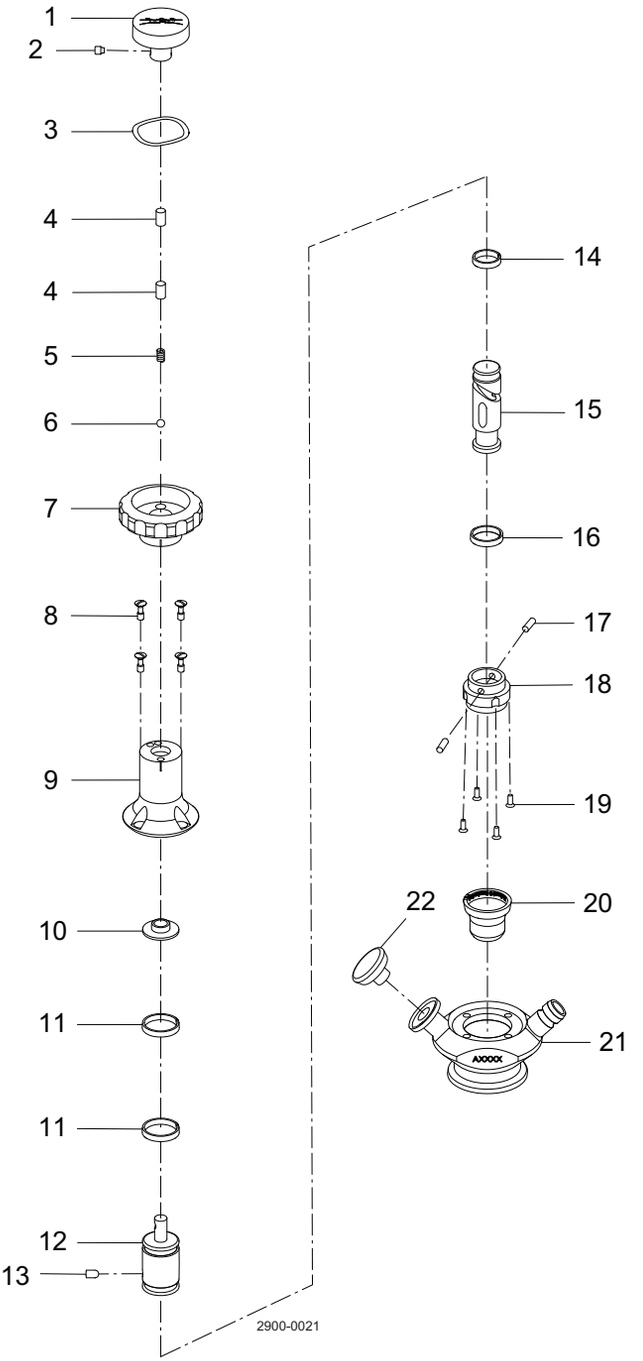

Pos	Qty	Denomination	Size 10
Manual actuator Size 10 Single Seat			
		Actuator	9614018401
1	1	Drive handle	
2	1	Pin screw	
3	1	Wave spring	
4	2	Pin	
5	1	Spring	
6	1	Ball	
7	1	Handle	
8	1	Mounting screw, set of 4 pcs.	9614022902
9	1	Actuator body	
10	1	Spacer	
11	2	Guide ring	
12	1	Piston drive	
13	1	Guide pin	
14	1	Guide ring	
15	1	Piston	
16	1	Guide ring	
17	2	Pin	
18	1	Actuator bottom	
19	4	Screws	

Pos	Qty	Denomination	Size 10
Membrane			
20	10	Membrane seal, EPDM, 10 pieces	9614018801
	10	Membrane seal, Silicone, 10 pieces	9614018851

Pos	Qty	Denomination	Size 10
Valve Body			
21	1	Valve body, Tank	9614089601
	1	Valve body, Tri-clamp	9614089501
	1	Valve body, collard pipe ISO 25	9614073901
	1	Valve body, collard pipe ISO 38	9614089701
	1	Valve body, collard pipe ISO 51	9614074101
	1	Valve body, collard pipe DIN DN 25	9614074001
	1	Valve body, collard pipe DIN DN 40	9614089801
	1	Valve body, collard pipe DIN DN 50	9614074201
22	1	Plug for upper connection, EPDM	9614290501

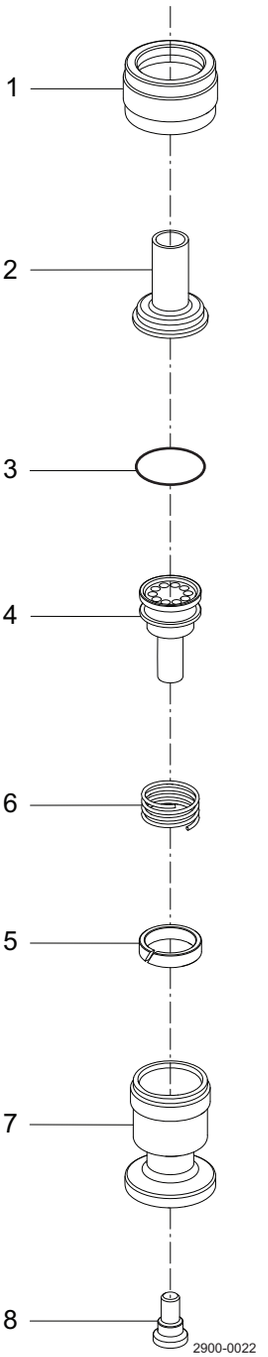
1
2
3
4
6
5
7
8
2900-0022

Pos		Qty	Denomination	Sizes 4 and 10	Size 25
1		1	Nut	9614024801	9614024801
2		1	Inlet, Weld	9614025501	9614025501
		1	Inlet, Quick connect	9614025401	9614025401
		1	Inlet, Steam generator	9614025201	9614025201
3	▲	1	O-ring		
4		1	Piston	9614025301	9614025301
5		1	Guide ring	9614071901	9614071901
6		1	Spring	9614016211	9614016211
7		1	Body	9614025001	9614033601
8	▲	1	Plug		

Service kits

		Sizes 4 and 10	Size 25
▲	Service kit	9611924312	9611924313

900682/3

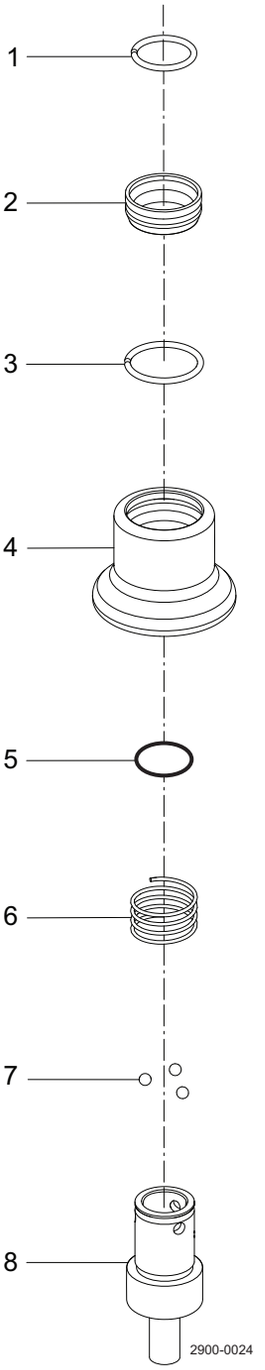
1
2
3
4
5
6
7
8
2900-0024

Pos	Qty	Denomination	
Female quick connect			
1	1	Lock ring	9611995063
2	1	Handle insert	9614024301
3	1	Lock ring	9611995065
4	1	Handle	9614024401
5	1	O-ring	9611995066
6	1	Spring	9614016210
7	3	Ball	9611995059
8	1	Body, hose Ø8	9614026201
	1	Body, hose Ø6	9614026301
	1	Body, blindcap	9614027501
	1	Body, pipe end Ø10	9614065401

Pos	Qty	Denomination	
Male quick connect			
9	1	Male quick connect	9614088901

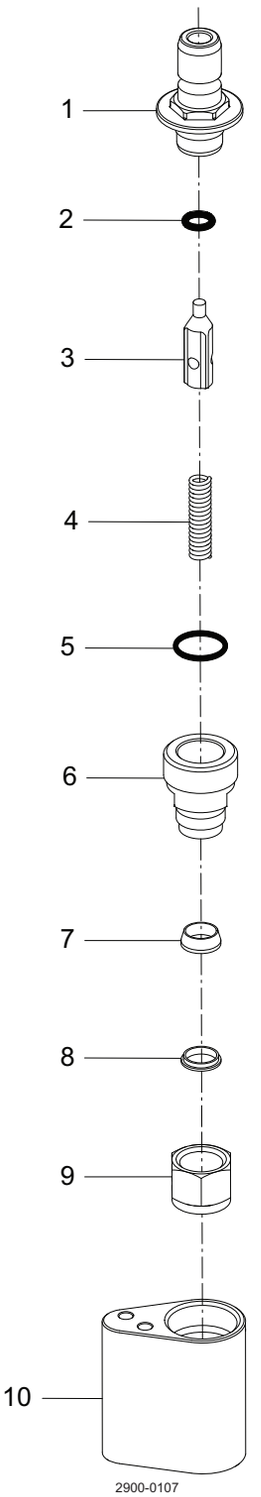
1
2
3
4
5
6
7
8
9
10
2900-0107

Pos	Qty	Denomination	
1	1	Male part	9614027001
2	1	O-ring	9611995467
3	1	Plug	9614027301
4	1	Spring	9614016215
5	1	O-ring	9611995183
6	1	Tube fitting, male coupling Ø10	9614027201
7	1	Front ferrule tube fitting Ø10	9611995181
8	1	Back ferrule tube fitting Ø10	9611995182
9	1	Nut	9611995180
10	1	Handle	9614026401

1.10

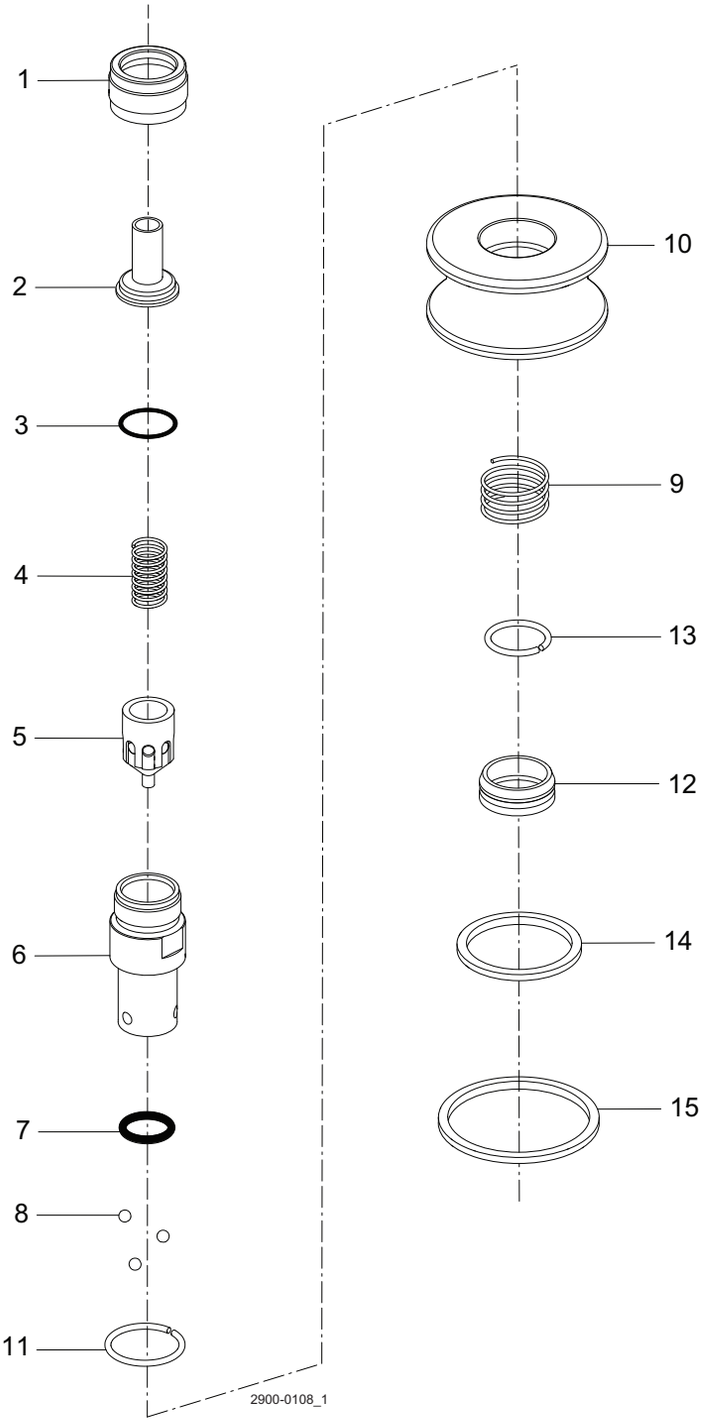

Pos	Qty	Denomination	
1	1	Nut	9614024801
2	1	Inlet	9614025501
3	1	O-ring	9611995061
4	1	Spring	9614016214
5	1	Plug	9614026601
6	1	Female part	9614026501
7	1	O-ring	9611995066
8	3	Ball	9611995059
9	1	Spring	9614016210
10	1	Handle	9614026701
11	1	Lock ring	9611995065
12	1	Handle insert	9614024301
13	1	Lock ring	9611995063
14	1	Ring	9614026801
15	1	Ring	9614026901

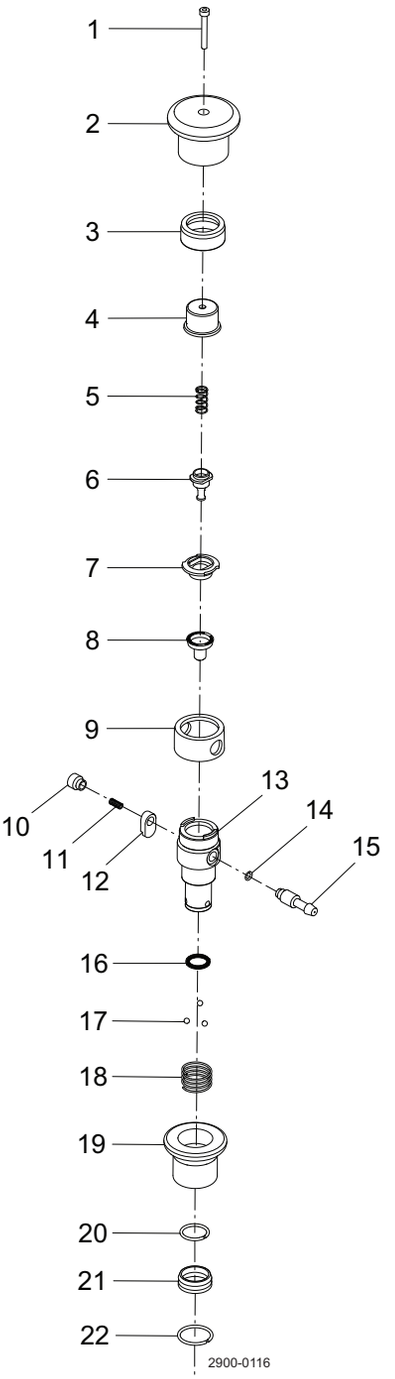
1
2
3
4
5
6
7
8
9
10
11
12
13
14
15
16
17
18
19
20
21
22
2900-0116

Pos		Qty	Denomination	Sizes 4 and 10
1		1	Screw	9611995086
2		1	Handle	9614200001
3		1	Nut	9614020901
4		1	Spring housing	9614199801
5		1	Spring	9614016219
6		1	Stem	9614024701
7		1	Guide for membrane	9614024601
8	▲	1	Membrane	
9		1	Cover	9614199901
10		1	Push button	9614200401
11		1	Safety pawl	9614200501
12		1	Spring	9614016220
13		1	Valve body	9614024501
14	▲	1	O-ring	
15		1	Nozzle	9614021001
16	▲	1	O-ring	
17		3	Ball	9611995059
18		1	Spring	9614016210
19		1	Handle	9614024401
20		1	Lock ring	9611995065
21		1	Handle insert	9614024301
22		1	Lock ring	9611995063

		Sizes 4 and 10
▲	**Service kit**	**9611924314**

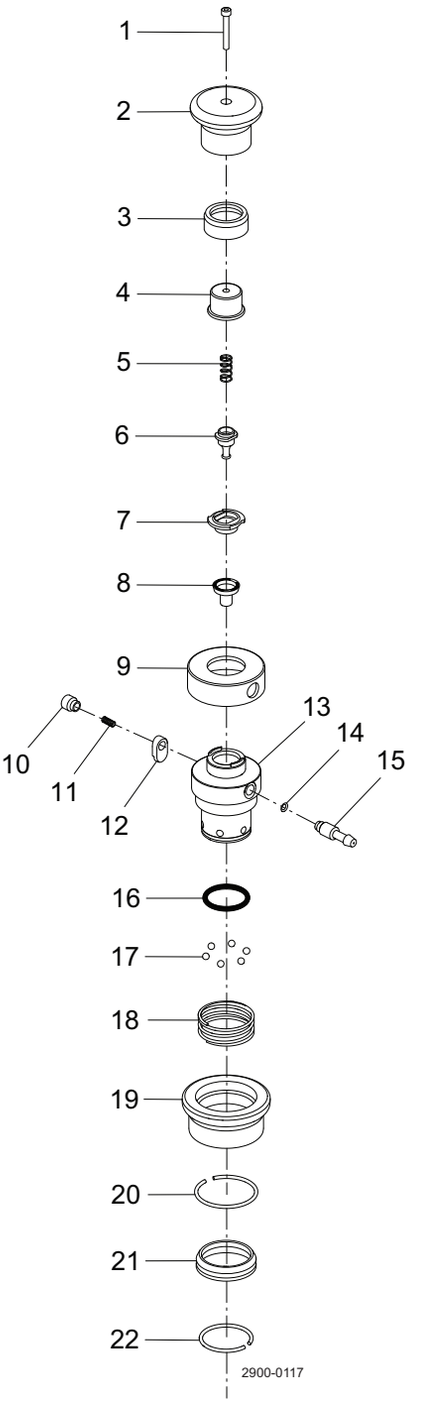
1
2
3
4
5
6
7
8
9
10
11
12
13
14
15
16
17
18
19
20
21
22
2900-0117

Pos		Qty	Denomination	
1		1	Screw	9611995086
2		1	Handle	9614200001
3		1	Nut	9614020901
4		1	Spring housing	9614199801
5		1	Spring	9614016219
6		1	Stem	9614024701
7		1	Guide for membrane	9614024601
8	▲	1	Membrane	
9		1	Cover	9614200801
10		1	Push button	9614200401
11		1	Safety pawl	9614200501
12		1	Spring	9614016220
13		1	Valve body	9614032701
14	▲	1	O-ring	
15		1	Nozzle	9614021001
16	▲	1	O-ring	
17		3	Ball	9611995193
18		1	Spring	9614016216
19		1	Handle	9614032901
20		1	Lock ring	9611995106
21		1	Handle insert	9614032801
22		1	Lock ring	9611995103

▲	Service kit	9611924315

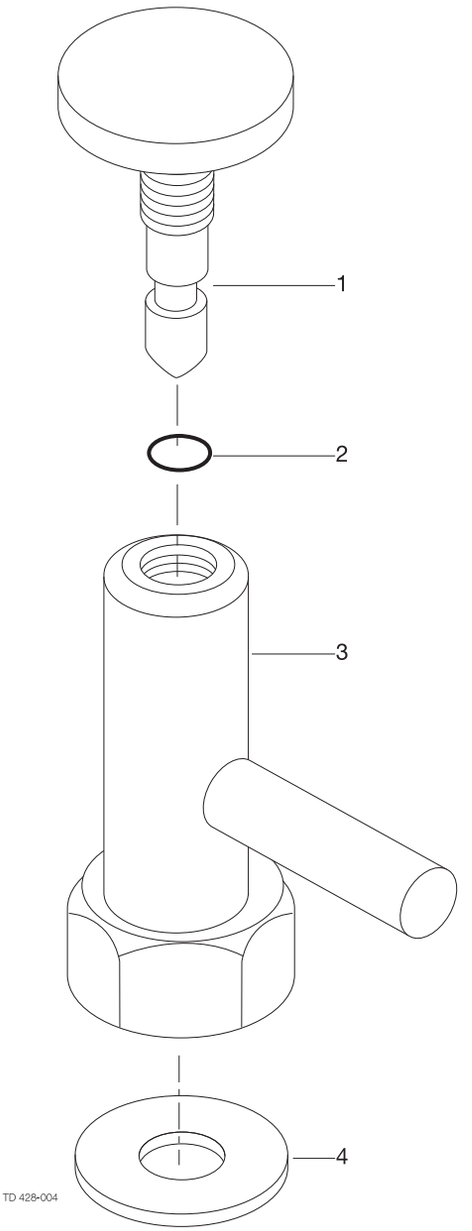
1
2
3
4
TD 428-004

AISI 304

Pos		Qty	Denomination	3135000201
1		1	Spindle	9611252176
2	□	1	O-ring (NBR)	9611990026
3		1	Valve body	
4	□	1	Fibre packing	8010005955

Recommended spare parts: pos. 2 and 4.

900-431

1.10

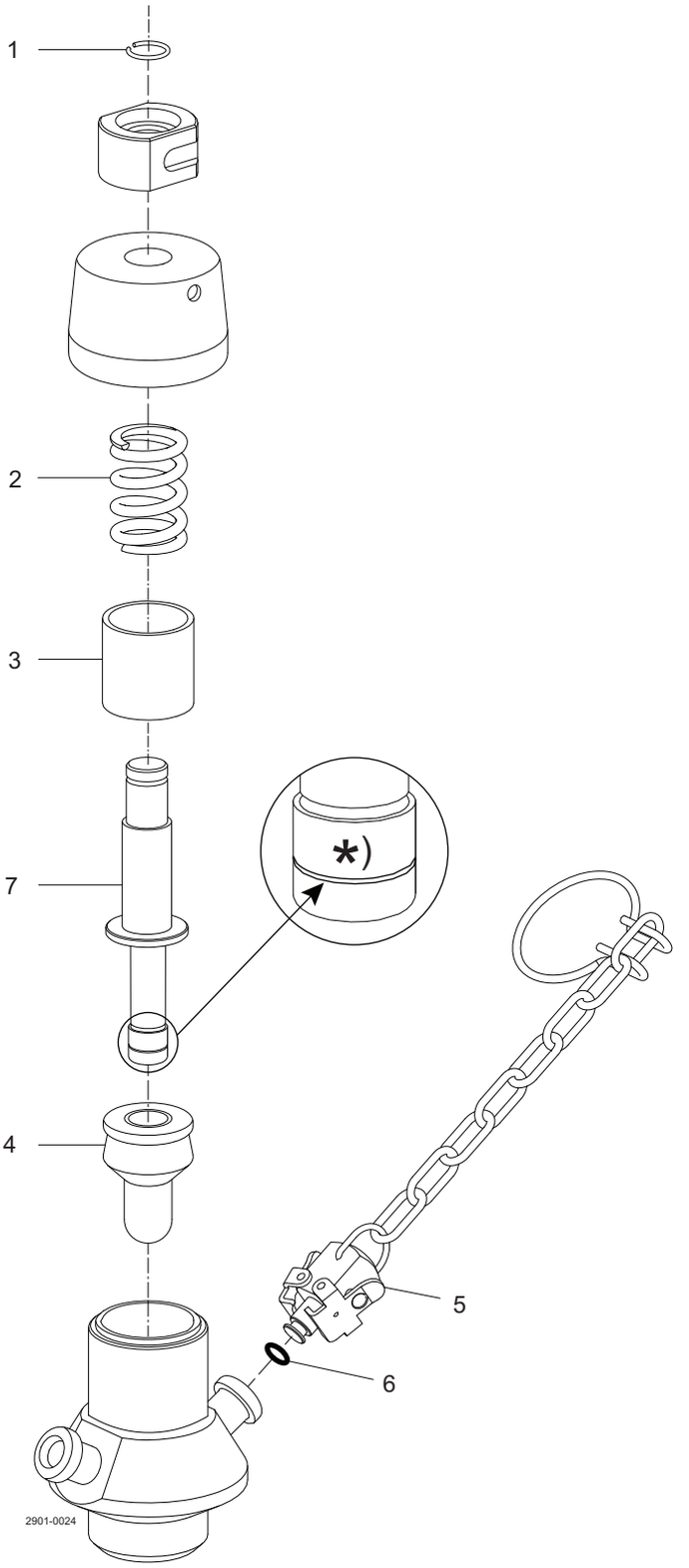

Pos	Qty	Denomination	
1	1	Locking ring	9615093501
2	1	MSV spring	9615154301*
3	1	Bushing for spring	9615093701
4	1	Membrane, EPDM, black, with metal bushing 20 pcs	9615102199
	1	Membrane, EPDM, white, with blue bushing 20 pcs	9615102196
	1	Membrane, EPDM, white, with grey bushing 20 pcs	9615102198
	1	Membrane, EPDM, white, with red bushing 20 pcs	9615102194
	1	Membrane, Silicone, with blue bushing 20 pcs	9615102195
	1	Membrane, Silicone, with grey bushing 20 pcs	9615102197
	1	Membrane, Silicone, with red bushing 20 pcs	9615102193
6	1	O-ring	9611995715
7	1	Plunger, manual	9615155401*

* if the plunger has one, or two grooves on the plunger head, a replacement of the springs demands an replacement of the plunger as well. (pos.2 and pos.7)

1.10

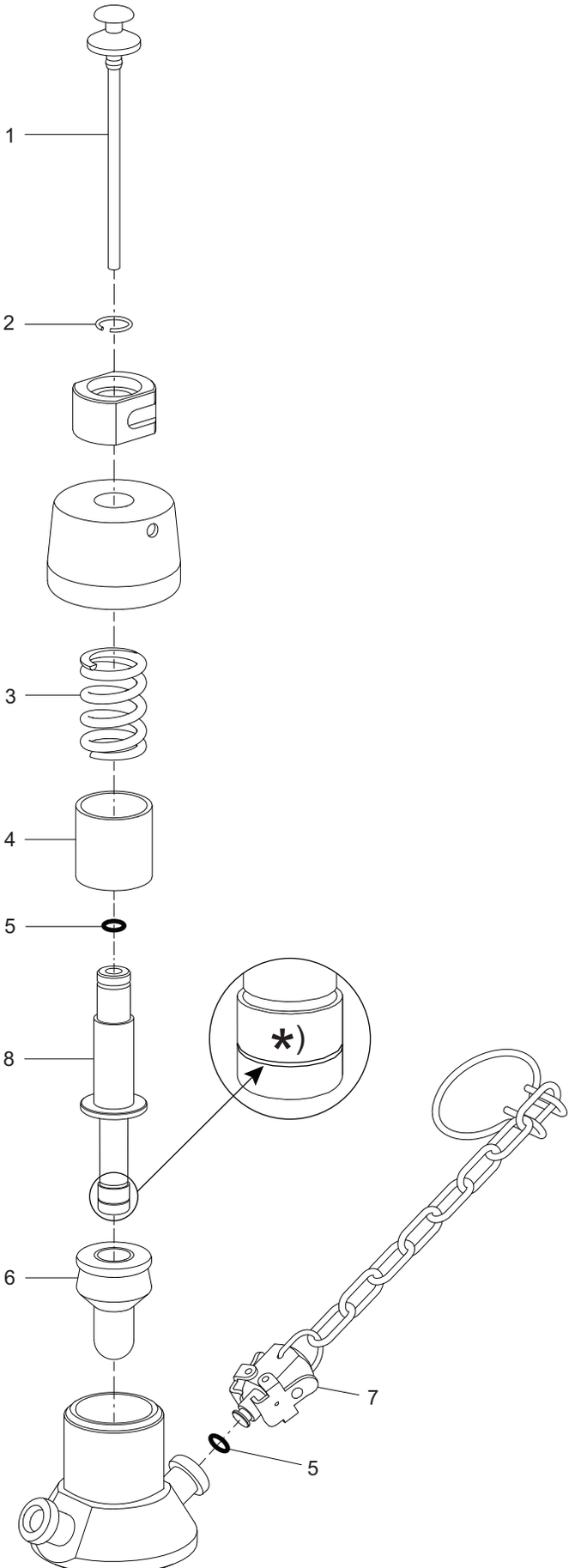

Pos	Qty	Denomination	
1	1	Closing cap w. pipe	9615144201
2	1	Locking ring	9615093501
3	1	MSV spring	9615154301*
4	1	Bushing for spring	9615093701
5	1	O-ring, EPDM	9611995715
6	1	Membrane, EPDM, black, with metal bushing 20 pcs	9615102199
	1	Membrane, EPDM, white, with blue bushing 20 pcs	9615102196
	1	Membrane, EPDM, white, with grey bushing 20 pcs	9615102198
	1	Membrane, EPDM, white, with red bushing 20 pcs	9615102194
	1	Membrane, Silicone, with blue bushing 20 pcs	9615102195
	1	Membrane, Silicone, with grey bushing 20 pcs	9615102197
	1	Membrane, Silicone, with red bushing 20 pcs	9615102193
7	1	Clip-on closing cap with chain (includes O-ring)	9615101201
8	1	Plunger microport	9615195501*

* if the plunger has one, or two grooves on the plunger head, a replacement of the springs demands an replacement of the plunger as well. (pos.2 and pos.7)

1.10

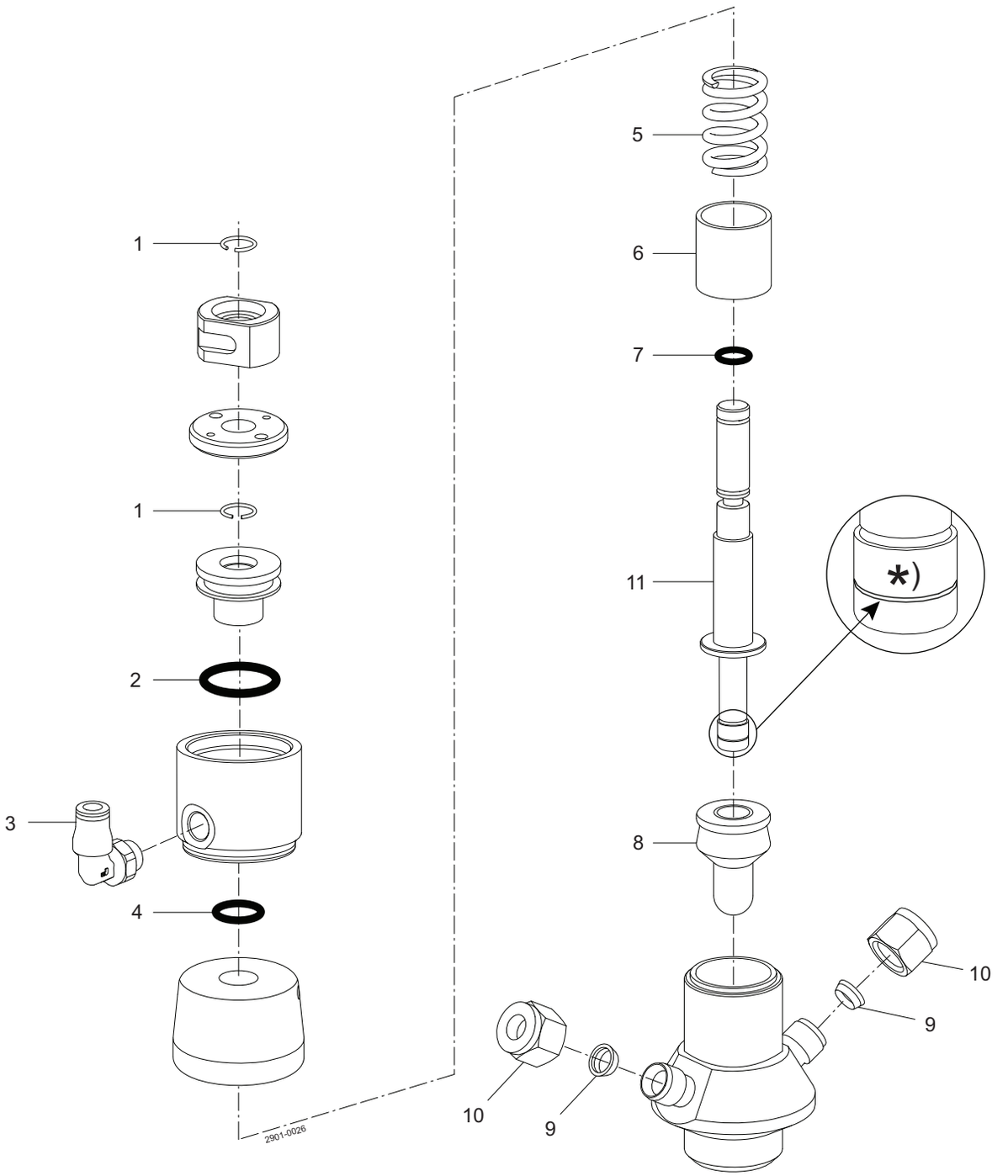

Pos		Qty	Denomination	
1	□	2	Locking ring	9615093501
2	□	1	O-ring, NBR	
3		1	Air inlet	9611991988
4	□	1	O-ring, NBR	
5		1	MSV spring	9615154301*
6		1	Bushing for spring	9615093701
7	□	1	O-ring, NBR	
8		1	Membrane, EPDM, black, with metal bushing 20 pcs	9615102199
		1	Membrane, EPDM, white, with blue bushing 20 pcs	9615102196
		1	Membrane, EPDM, white, with grey bushing 20 pcs	9615102198
		1	Membrane, EPDM, white, with red bushing 20 pcs	9615102194
		1	Membrane, Silicone, with blue bushing 20 pcs	9615102195
		1	Membrane, Silicone, with grey bushing 20 pcs	9615102197
		1	Membrane, Silicone, with red bushing 20 pcs	9615102193
9		2	Ferrule set	9611995506
10		2	Nut	9611995505
11		1	Plunger Pneumatic*	9615154701

* if the plunger has one, or two grooves on the plunger head, a replacement of the springs demands an replacement of the plunger as well. (pos.2 and pos.7)

□	**Service kit**	**9611924317**

Parts marked with □ are included in the service kits.

1.10

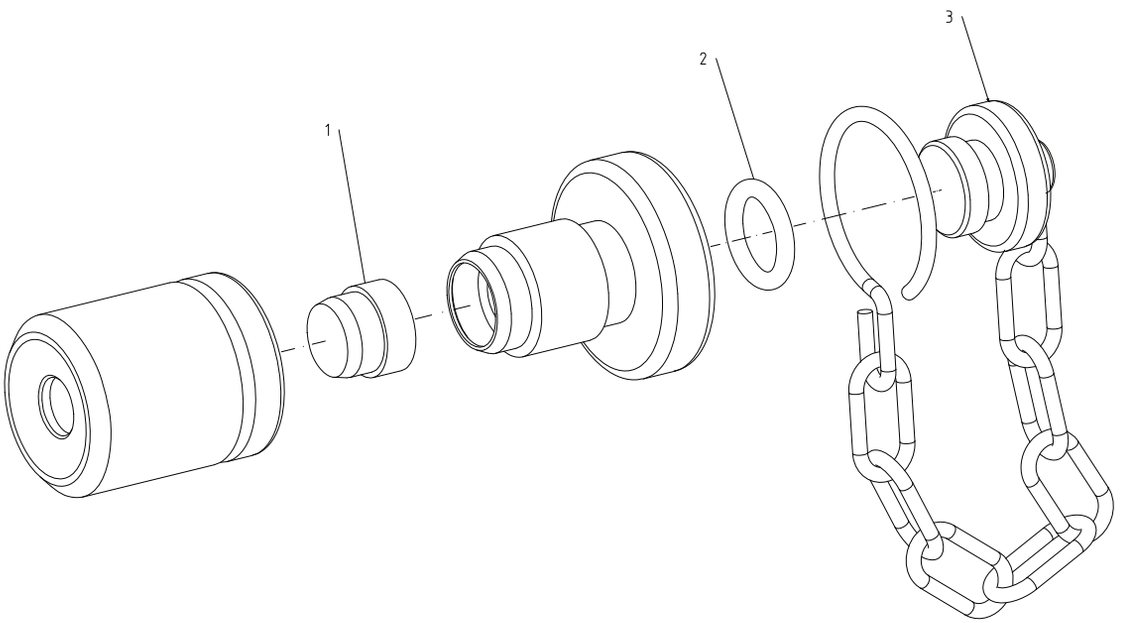

Pos	Qty	Denomination	
1	1	Rubber plug, Q 100PCS	9680125522
1	1	Rubber plug, NR 100PCS	9680125521
2	1	O-ring, NBR	9611992881
3	1	Plug with chain (incl. Pos. 2)	9615228301

1.10

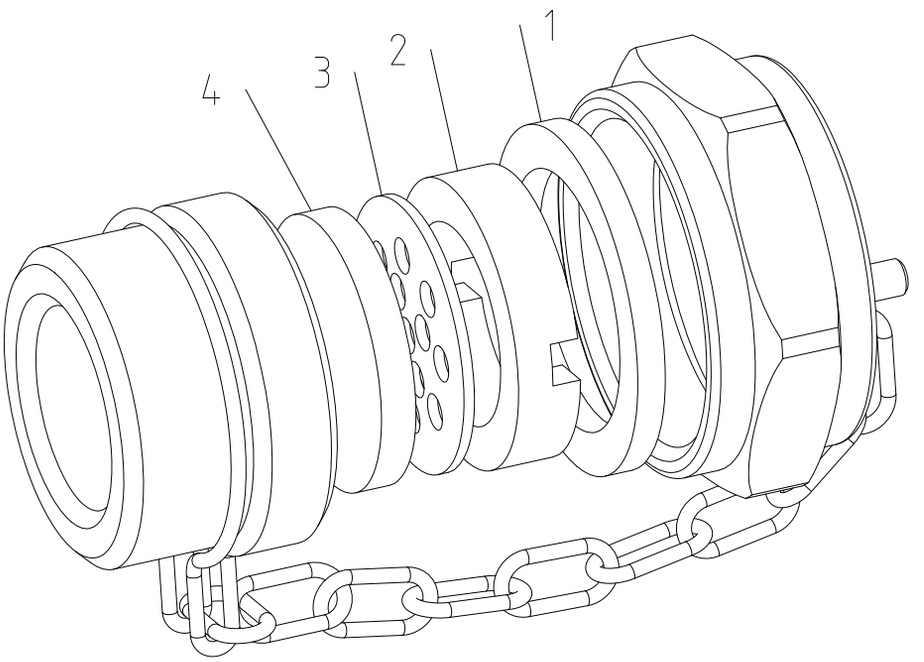

Pos	Qty	Denomination	
1	1	Gasket, NBR	9680122969
2	1	Treaded nipple	9615139201
3	1	Perforated disc	9615139101
4	1	Membrane, NBR 10 PCS	9614446501

1.10

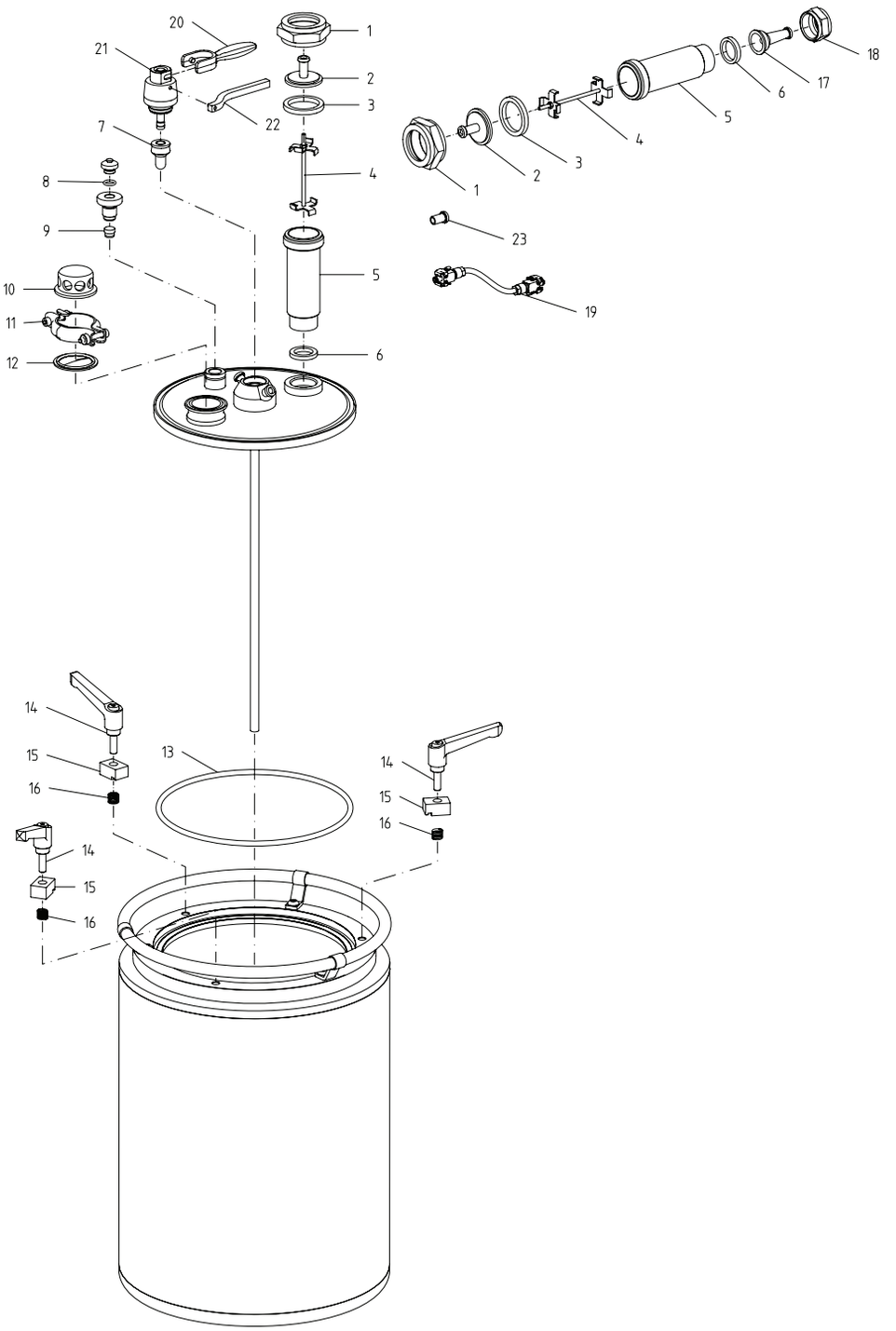

Pos		Qty	Denomination	
1	□♦	1	Filter nut large	
2	□♦	1	Filter top large	
3	□♦○	2	Seal, EPDM	
4	□♦	1	Filter holder	
5	□♦	1	Filter house	
6	♦○	2	Seal, EPDM	
7		1	Membrane Q, 20 PCS	9615102197
8	○	1	O-ring, NBR	
9		1	Rubber plug NR, 100 PCS	9680125521
10		1	Protection cap	9615126301
11		1	Clamp	9611311051
12		1	Bursting disc	9680123773
13	○	1	O-ring, Q	
14	▲	3	Handle	
15	▲	3	Block	
16	▲	3	Spring	
17	♦	1	Filter top small	
18	♦	1	Filter nut small	
19		2	3m silicone hose w. 2 clip-on	9615118801
20		1	Quick opening key	9615119001
21		1	MSV Actuator Manual 6bar	9615146301
22		1	Assembly key	9615119801
23		1	Weld in clip-on	9615085601
		2	Hydrophobic cotton for filter	9680124420

Assembly and service kits for Carlsberg flask:

□	**Filter House I**	**9615123601**
♦	**Filter House II**	**9615123602**
▲	**Handle set incl. 1x(pos. 14;15;16)**	**9615125970**
○	**Service kit**	**9611924316**

Parts marked with □♦○▲ are included in the Assembly and service kits.

1.10

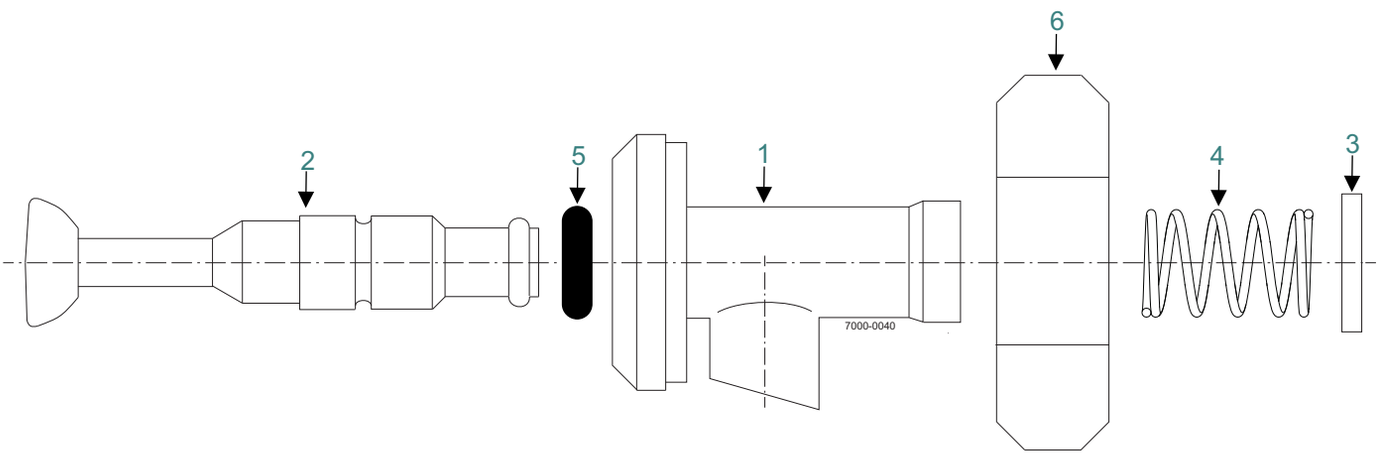

Pos		Qty	Denomination	
1		1	Body	NA
2		1	Stem & Seat Buna	620033
3	□♦	1	Spring Retainer	620769
4	□♦	1	Spring	620768
5	□	1	O Ring, BUNA	296257
	♦	1	O Ring, SFY	290173
6		1	Hex Nut, 1½"	011250
		1	Hex Nut, 2"	011250

Parts marked with □♦ are included in the service kits.

□	Service Kit BUNA	9613990620
♦	Service Kit SFY	9613990621

1.10

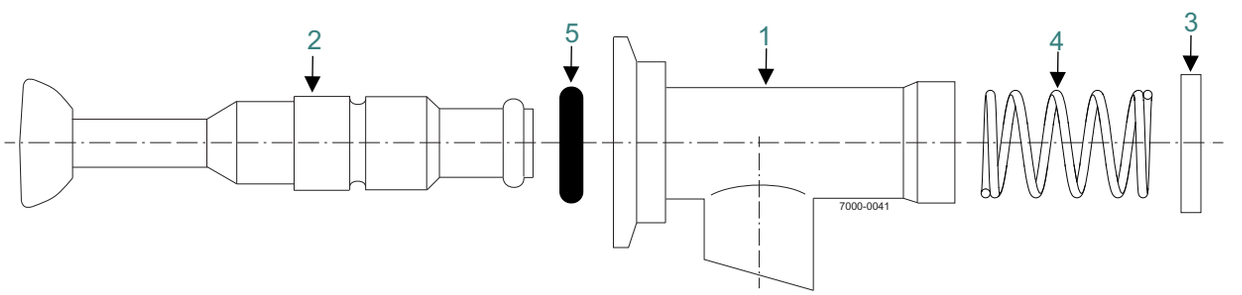

Pos		Qty	Denomination	1 1/2”	2”
1		1	Body	NA	NA
2		1	Stem & Seat, BUNA	620033	620033
		1	Stem & Seat, SFY	318825	318825
3	□♦	1	Spring Retainer	620769	620769
4	□♦	1	Spring	620768	620768
5	□	1	O Ring, BUNA	296257	296257
	♦	1	O Ring, SFY	290173	290173

Parts marked with □♦ are included in the service kits.

□	Service Kit BUNA	9613990620
♦	Service Kit SFY	9613990621

1.10

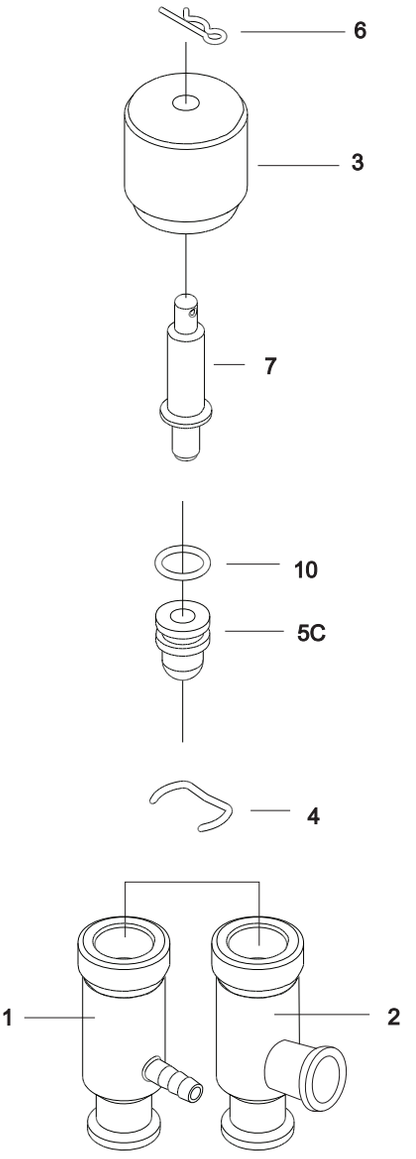

Pos		Qty	Denomination	
1		1	Valve body 1/2 clamp x 1/4 hose barb	770920
2		1	Valve body 1/2 x 1/2 clamp	773112
3		1	Handle UHMW	750544
		1	Handle aluminum bronze	751693
4		1	Clip	750551
5C	□	1	PTFE plug w/ o-ring (o-ring not included)	750557
6		1	Pin	750526
7		1	Stem	771428
10	□	1	Plug o ring for #5c plug only, SFY	750173
	□	1	Plug o ring for #5c plug only, EPDM	750037

Parts marked with □ are included in the service kits.

1.10

□	**Service Kit**	**9613990135**

Not manufactured anymore

1.10

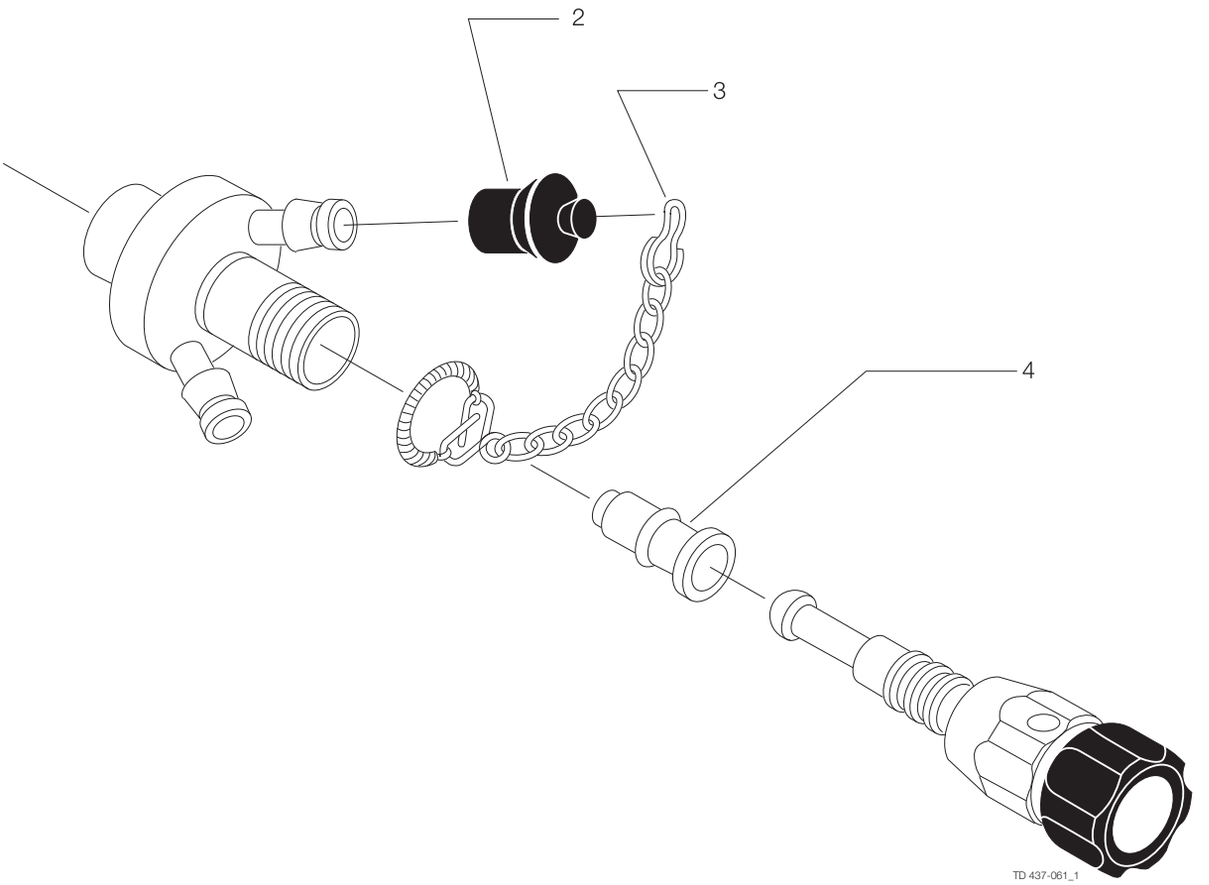

Pos	Qty	Denomination	M4	W6/W8/W9
2	1	Rubber cap		
3	1	Chain with hook		
4	1	Membrane, Q		
	1	Membrane, EPDM	9611992952	9611992783

1.10

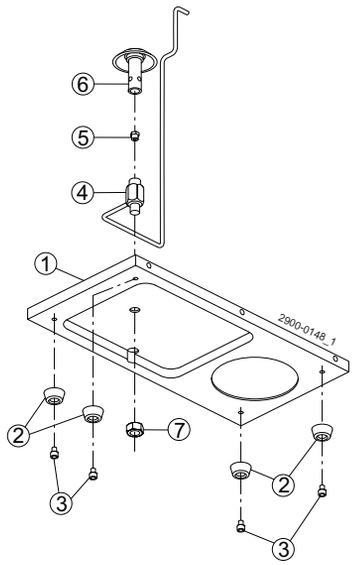
6
5
4
1
2900-0148_1
2
7
3
2
3

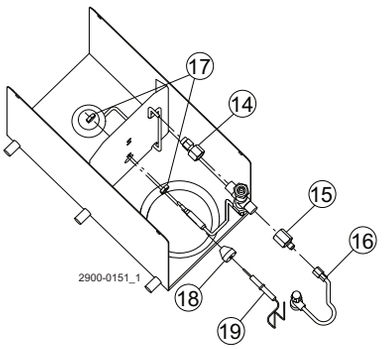
17
14
15
16
2900-0151_1
18
19

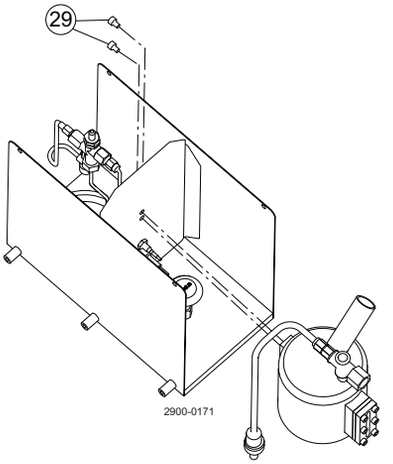
29
2900-0171

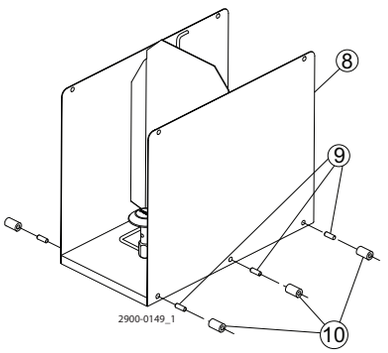
8
9
2900-0149_1
10

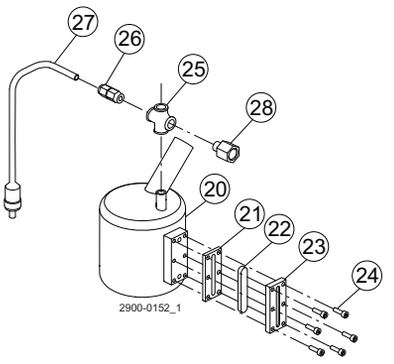
27
26
25
28
20
21
22
23
24
2900-0152_1

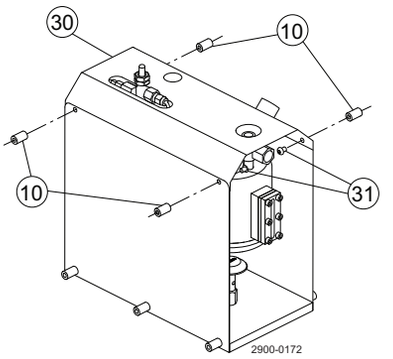
30
10
10
31
2900-0172

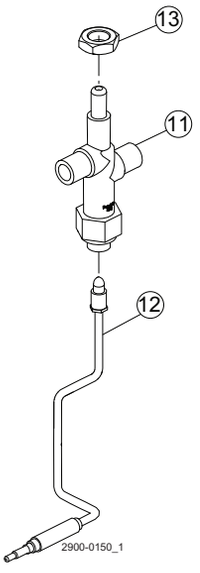
13
11
12
2900-0150_1

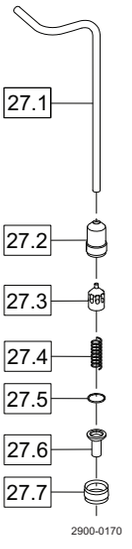
27.1
27.2
27.3
27.4
27.5
27.6
27.7
2900-0170

Pos	Qty	Denomination	
1	1	Base plate	9614037001
2	4	Rubber bumpers	9611995424
3	4	Screw	9611995405
4	1	Gas bracket	9614207101
5	1	Jet nozzle	9611995133
6	1	Gas burner	9611995130
7	1	Nut	9611990353
8	1	Heat shield assembly	9614200701
9	6	Screw	9611995421
10	10	Distance piece	9614038701
11	1	Flame failure valve	9611995413
12	1	Thermocouple	9611995142
13	1	Nut	9611995425
14	1	Adaptor	9611995144
15	1	Adaptor	9614039801
16	1	Gas regulator	9611995134
17	2	Nut	9611995422
18	1	Cable glands	9611995417
19	1	Spark electrode	9611995131
20	1	Vessel assembly	9614198301
21	1	Gasket	9614038501
22	1	Sight glass	9614207001
23	1	Frame for glass	9614038601
24	6	Screw	9611995418
25	1	Cross fitting	9611995414
26	1	Adaptor	9611995456
27	1	Pressure relief valve assembly	9614201001
27.1	1	- Pipe	9614037901
27.2	1	- Valve housing	9614038101
27.3	1	- Plug	9614026601
27.4	1	- Spring	9614016214
27.5	1	- O-ring	9611995061
27.6	1	- Pipe end	9614025501
27.7	1	- Nut	9614024801
28	1	Hose connection	9614039301
29	2	Screw	9611995419
30	1	Heat shield top	9614219401
31	14	Screw	9611995420

1.10

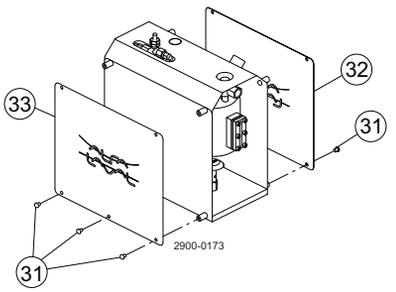
33
32
31
31
2900-0173

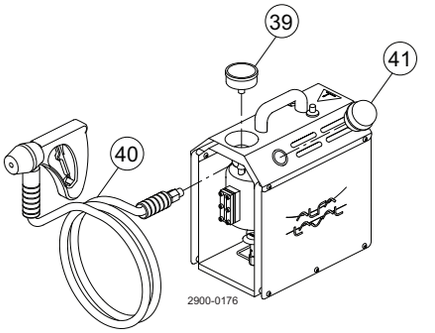
39
41
40
2900-0176

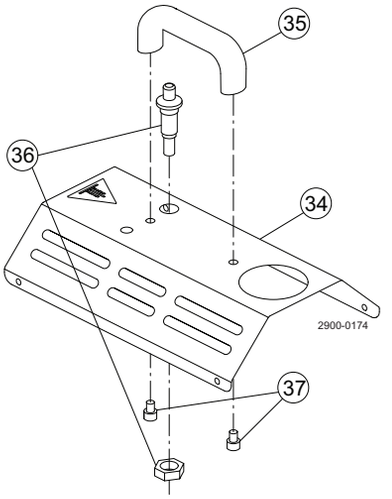
35
36
34
2900-0174
37

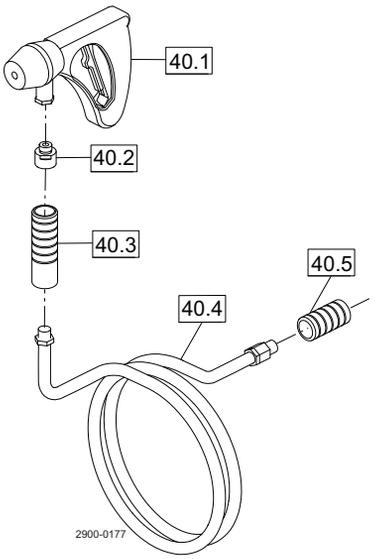
40.1
40.2
40.3
40.5
40.4
2900-0177

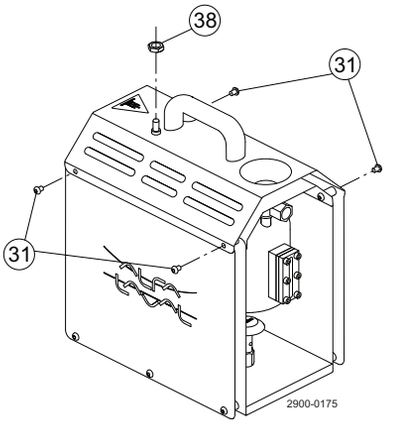
38
31
31
2900-0175

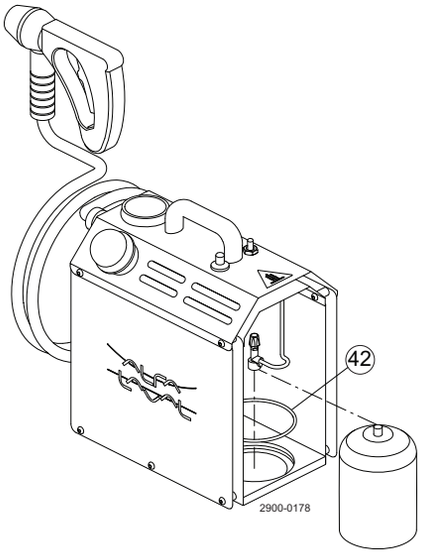
42
2900-0178

Pos	Qty	Denomination	
31	14	Screw	9611995420
32	1	Plate	9614205501
33	1	Plate	9614258001
34	1	Top plate	9614039001
35	1	Handle	9611995139
36	1	Ingiter	9611995141
37	2	Screw	9611995430
38	1	Nut	9611995425
39	1	Manometer	9611995149
40	1	Hose assembly	9614206501
40.1	1	- Handle	9614200201
40.2	1	- Hose connection	9614039501
40.3	1	- Cover	9614202701
40.4	1	- Steam hose	9611995132
40.5	1	- Cover	9614039601
41	1	Safety cap	9611995138
42	1	O-ring	9611995140
43	1	Sticker	9611995450

Not manufactured anymore

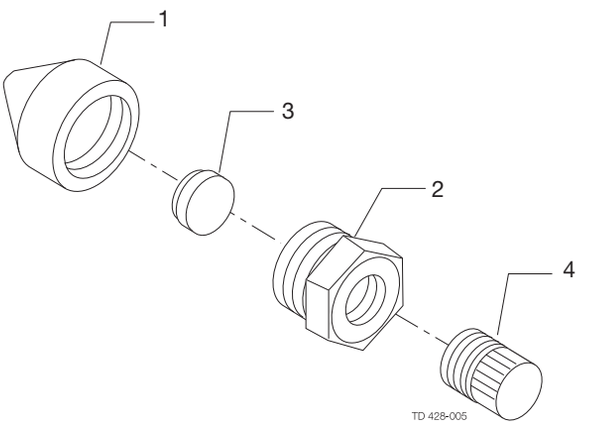

AISI 304

Pos		Qty	Denomination	3135000321
1		1	Body	3135000331
2		1	Pressure screw	
3	□	1	Rubber plug	3135000351
4		1	Plug	3135000361

Recommended spare parts: pos. 3.

900-432

1.11 Shutter valves

The MH is a self-draining valve that allows for multi-directional flow of product.

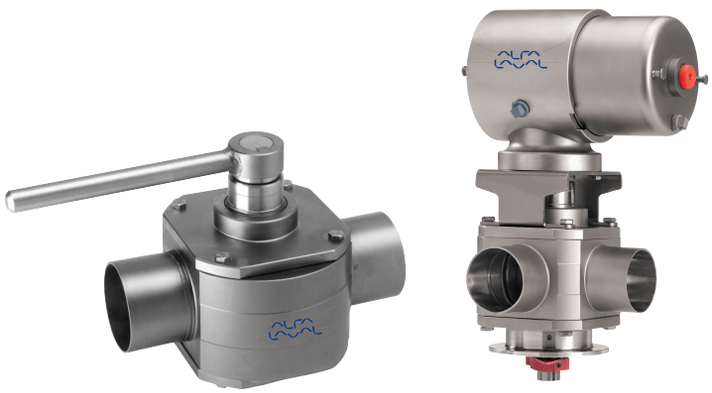

Spare parts

MH valve 1.11.964
MH valve, handle 1.11.968
MH actuator 630 . . . . . 1.11.970
MH actuator 631 . . . . . 1.11.974
MH actuator 632 . . . . . 1.11.976
MH actuator 633 . . . . . 1.11.978
MH laterally fitted indication 1.11.980
D10 and D11 plug and storage tank valve parts 1.11.982
D10 plug and storage tank valve gasket 1.11.984

Spare parts for obsolete products

Koltek Valve MHI, MHE 1.11.986
Koltek Actuator, type KH531, KH532, KH533, KH534, KH521 and KH2 . . 1.11.988
LKHL straight through cock 1.11.992
LKTH 3-way cock 1.11.994

1.11

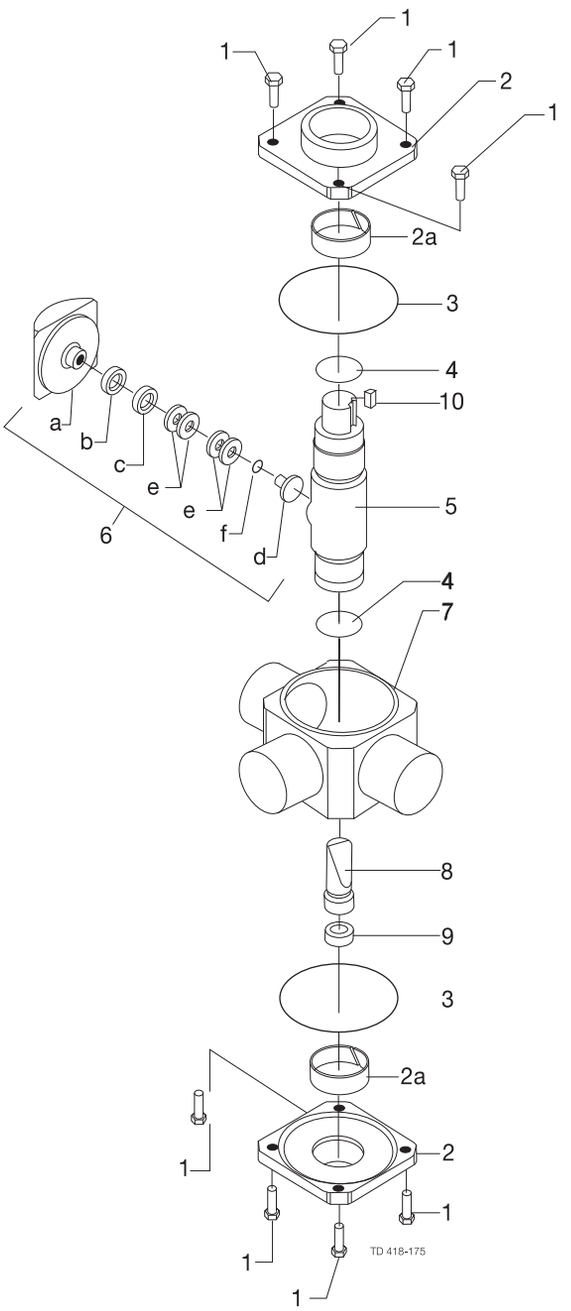

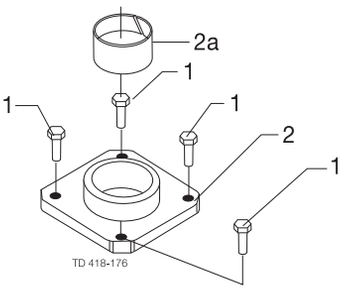

Bearing and lid for bearing

Pos		Qty	Denomination	25 mm DN25	38 mm DN40	51 mm DN50
1		8	Screw	9611993351	9611993351	9611990456
2		2	Lid for guide ring, (standard)	9612511101	9612511201	9612511302
		2	Lid for bearing ("Old type")	9612395102	9612395202	9612394902
2a		2	Guide ring, (standard)	9612511601	9612511602	9612511603
		2	Bearing, bronze (for "old lid")	9612395001	9612395002	9612395003
		2	Bearing, PTFE (for "old lid")	9612395701	9612395702	9612395703
3	♦	2	O-ring, EPDM (standard)			
		2	O-ring, NBR			
		2	O-ring, FPM			
4	♦	2	O-ring, EPDM (standard)			
		2	O-ring, NBR			
		2	O-ring, FPM			
5		1	Shaft, AISI 316L	9612262701	9612262801	9612262901
6		1	Shutter unit, PTFE/316L (standard)	9612264102	9612264202	9612264302
		1	Shutter unit, Flourosint/316L			
		1	Shutter unit, PTFE/FPM	9612264103	9612264203	9612264303
6a	□	1	Shutter, PTFE (standard)	9612394801	9612394802	9612394803
		1	Shutter, Flourosint			
		1	Shutter, PTFE/FPM	9612394815	9612394816	9612394817
6b	□	1	Seal ring	9612394301	9612394302	9612394303
6c	□	1	Support ring	9612394201	9612394202	9612394202
6d		1	Adjustment key	9612394401	9612394402	9612394402
6e		4	Cup spring	9611992315	9611992316	9611992316
6f	♦	1	O-ring			
7		1	Valve body, 2-way, ISO	9612265504	9612265604	9612265704
		1	Valve body, 3-way, ISO	9612265505	9612265605	9612265705
		1	Valve body, 2-way, DIN	9612444210	9612444510	9612448604
		1	Valve body, 3-way, DIN	9612444211	9612444511	9612448605
8		1	Tightening device	9612269001	9612451601	9612269201
9		1	Safety screw	9612400801	9612400801	9612269801
10		1	Wedge	9612436701	9612436701	9612436701

Pos		Qty	Denomination	63.5 mm	76 mm DN65	DN80	101.6 mm DN100
1		8	Screw	9611990456	9611991910		
		16	Screw			9611991910	9611991910
2		2	Lid for guide ring, (standard)	9612511402	9612511502	9612513402	9612513502
		2	Lid for bearing ("Old type")	9612395302	9612395402	9612395502	9612395602
2a		2	Guide ring, (standard)	9612511604	9612511604	9612511605	9612511605
		2	Bearing, bronze (for "old lid")	9612395004	9612395005	9612395006	9612395006
		2	Bearing, PTFE (for "old lid")	9612395704	9612395705	9612395706	9612395706
3	♦	2	O-ring, EPDM (standard)				
		2	O-ring, NBR				
		2	O-ring, FPM				
4	♦	2	O-ring, EPDM (standard)				
		2	O-ring, NBR				
		2	O-ring, FPM				
5		1	Shaft, AISI 316L	9612263001	9612263101	9612263201	9612263301
6		1	Shutter unit, PTFE/316L (standard)	9612264402	9612264502	9612264602	9612272902
		1	Shutter unit, Flourosint/316L				
		1	Shutter unit, PTFE/FPM	9612264403	9612264503	9612264603	
6a	□	1	Shutter, PTFE (standard)	9612394804	9612394805	9612394806	9612394807
		1	Shutter, Flourosint				
		1	Shutter, PTFE/FPM	9612394818	9612394819	9612394820	9612394821
6b	□	1	Seal ring	9612394303	9612394304	9612394305	9612394306
6c	□	1	Support ring	9612394202	9612394203	9612394204	9612394205
6d		1	Adjustment key	9612394403	9612394404	9612394405	9612394406
6e		4	Cup spring	9611992317	9611992318	9611992319	9611992320
6f	♦	1	O-ring				
7		1	Valve body, 2-way, ISO	9612268604	9612268704		9612268904
		1	Valve body, 3-way, ISO	9612268605	9612268705		9612268905
		1	Valve body, 2-way, DIN		9612445110	9612445410	9612445710
		1	Valve body, 3-way, DIN		9612445111	9612445411	9612445711
8		1	Tightening device	9612269301	9612269401	9612269501	9612269601
9		1	Safety screw	9612269801	9612269801	9612401501	9612401501
10		1	Wedge	9612436701	9612436701	9612449101	9612449101

1.11

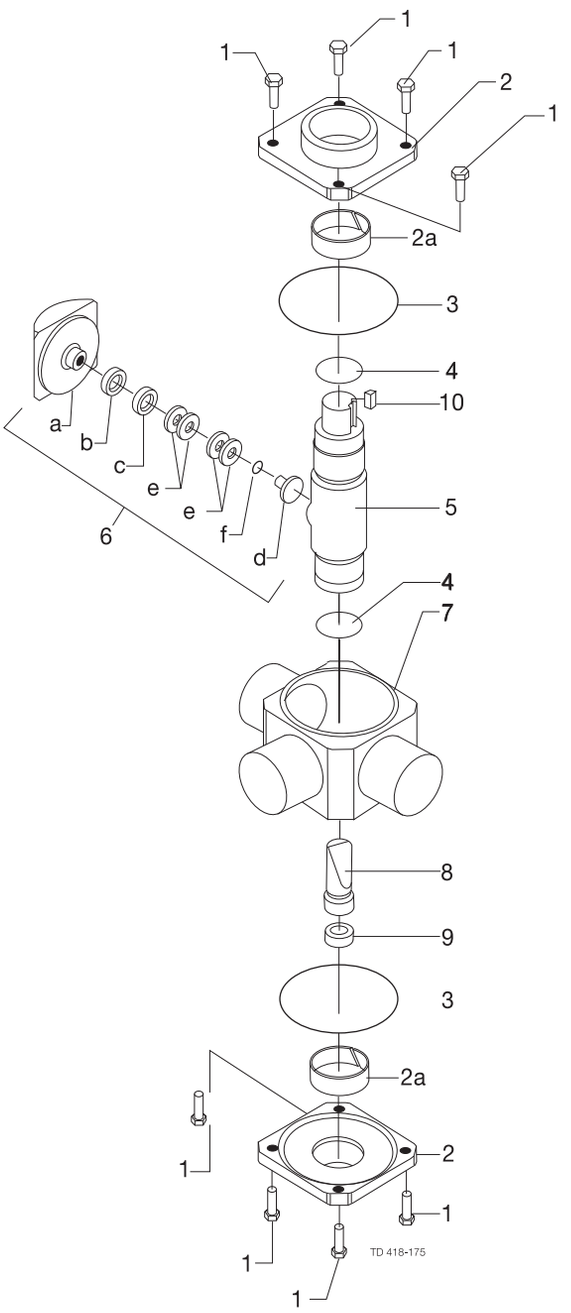

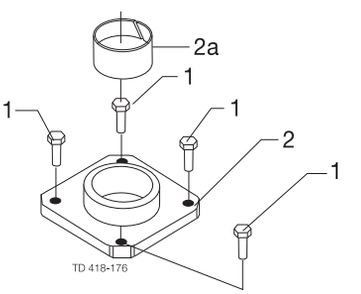

Bearing and lid for bearing

		25 mm DN25	38 mm DN40	51 mm DN50
Service Kits for Shutterkit (6a+b+c)				
□	Service kit	9611924045	9611924046	9611924047
Service Kits for Product wetted parts				
♦	Service kit EPDM	9611924052	9611924055	9611924058
♦	Service kit NBR	9611924053	9611924056	9611924059
♦	Service kit FPM	9611924054	9611924057	9611924060

		63.5 mm	76 mm DN65	DN80	101.6 mm DN100
Service Kits for Shutterkit (6a+b+c)					
□	Service kit	9611924048	9611924049	9611924050	9611924051
Service Kits for Product wetted parts					
♦	Service kit EPDM	9611924061	9611924064	9611924067	9611924070
♦	Service kit NBR	9611924062	9611924065	9611924068	9611924071
♦	Service kit FPM	9611924063	9611924066	9611924069	9611924072

Parts marked with □♦ are included in the service kit
Recommended spare parts: service kit

900-117/2

1.11

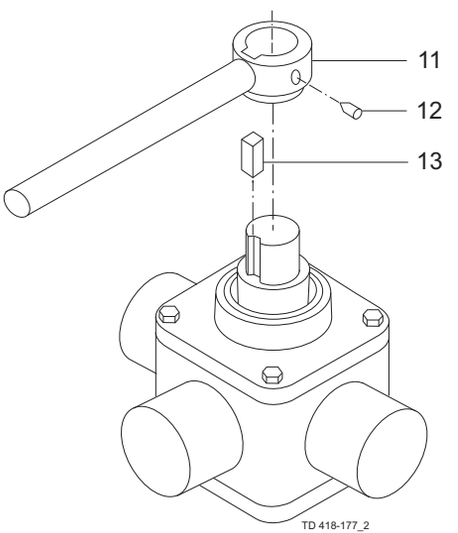

Pos	Qty	Denomination	25-38 mm DN25-40	51-63.5 mm DN50-65	76 mm	101,6mm DN80-100
SMS, ISO, BS, DIN, DS						
11	1	Handle, 2-way (incl. pos. 12)				
12	1	Pointed screw				
13	1	Wedge	9612436701	9612436701	9612436701	9612449101
SMS, ISO, BS						
11	1	Handle, 3-way (incl. pos 12)	9612436201	9612436202	9612436203	9612449001
12	1	Pointed screw				
13	1	Wedge	9612436701	9612436701	9612436701	9612449101
DIN, DS						
11	1	Handle, 3-way (incl. pos 12)	9612436207	9612436208	9612436209	9612449003
12	1	Pointed screw				
13	1	Wedge	9612436701	9612436701	9612436701	9612449101

900119/2

1.11

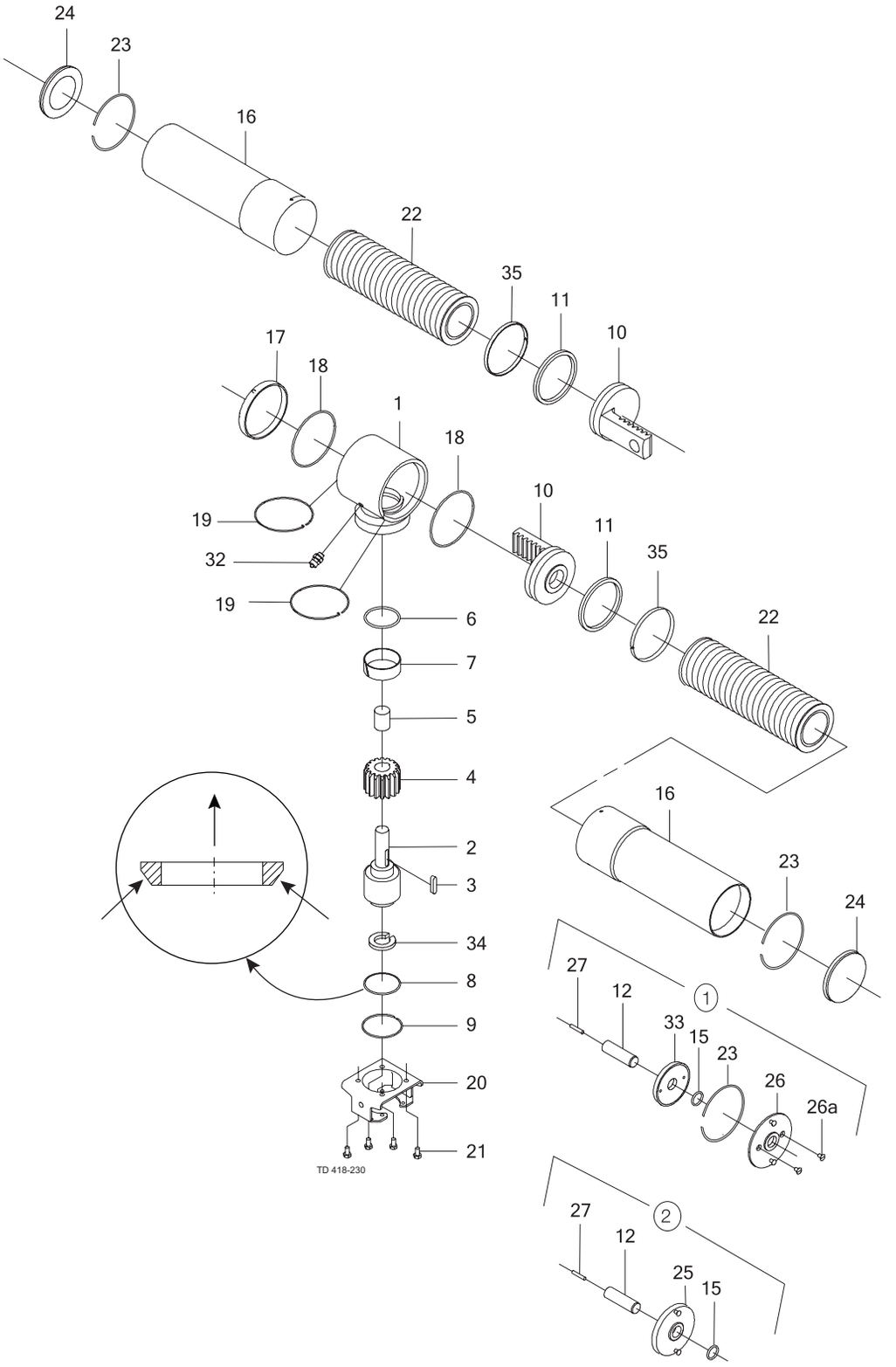

① With indication Sizes
63.5-76 mm
DN65

② With indication Sizes
25-51 mm
DN25-50

Pos		Qty	Denomination	25-51 mm DN25-50	With indication 25-51 mm DN25-50	63.5-76 mm DN65	With indication 63.5-76 mm DN65
1		1	Chassis	9612480901	9612480901	9612480901	9612480901
2		1	Spindle	9612479601	9612479601	9612479601	9612479601
3		1	Wedge	9612493701	9612493701	9612493701	9612493701
4		1	Gear wheel	9612479501	9612479501	9612479501	9612479501
5		1	Bearing	9611993172	9611993172	9611993172	9611993172
6	□	1	O-ring	9611991413	9611991413	9611991413	9611991413
7	□	1	Guide ring	9612493801	9612493801	9612493801	9612493801
8	□	1	Bearing	9612494101	9612494101	9612494101	9612494101
9		1	Lock ring	9612480301	9612480301	9612480301	9612480301
10		1	Piston	9612493901	9612493901		
		2	Piston			9612493901	9612493901
11	□	1	O-ring, (Period 2003-)	9611994215	9611994215		
		2	O-ring, (Period 2003-)			9611994215	9611994215
		1	O-ring, (Period -2003)	9611992233	9611992233		
		2	O-ring, (Period -2003)			9611992233	9611992233
12		1	Indication stem		9612505501		9612505501
15	□	1	O-ring		9611992129		9611992129
16		1	Cylinder	9612481901	9612481901		
		2	Cylinder			9612494801	9612494801
17		1	Cover	9612479701	9612479701		
18	□	2	O-ring	9611993170	9611993170	9611993170	9611993170
19		2	Lock wire	9612482501	9612482501	9612482501	9612482501
20		1	Bonnet, MH25	9612495901	9612495901		
		1	Bonnet, MH38	9612496001	9612496001		
		1	Bonnet, MH51	9612496101	9612496101		
		1	Bonnet, MH63			9612496201	9612496201
		1	Bonnet, MH76			9612505101	9612505101
21		4	Screw	22103102	22103102	22103102	22103102
22		1	Spring	9612505401	9612505401		
		2	Spring			9612505301	9612505301
23		1	Lock wire	9612494401	9612494401		
		2	Lock wire			9612495201	9612495201
24		1	Flange	9612506501			
		2	Flange			9612494901	
25		1	Flange for indication		9612494501		
26		1	Flange for indication				9612494701
26a		2	Screw				9611993173
27		1	Screw for indication stem		9611993039		9611993039
32		1	Air fitting	9611991988	9611991988	9611991988	9611991988
33		1	Guide for indication				9612495101
34		1	Spindle extension (only for MH25)	9612482001	9612482001		
35	□	1	Guide ring, (Period 2003-)	9612940701	9612940701		
		2	Guide ring, (Period 2003-)			9612940701	9612940701

1.11

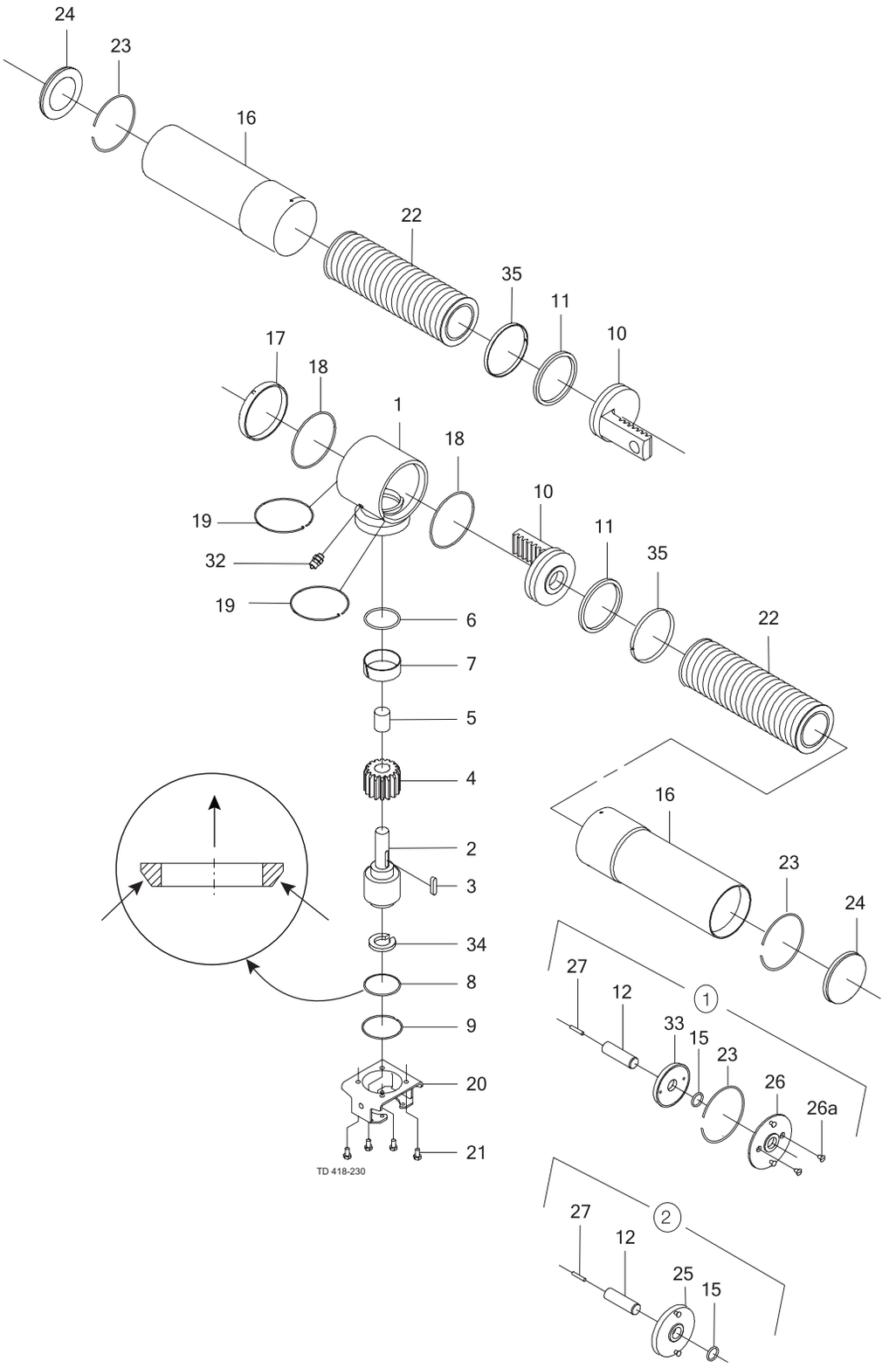

① With indication
Sizes
63.5-76 mm
DN65

② With indication
Sizes
25-51 mm
DN25-50

		25-51 mm DN25-50	With indication 25-51 mm DN25-50	63.5-76 mm DN65	With indication 63.5-76 mm DN65
Service kit for actuator (Period 2003-)					
□	Service kit	9611924194	9611924195	9611924196	9611924197
Service kit for actuator (Period -2003)					
□	Service kit	9611924175	9611924176	9611924177	9611924178

Parts marked with □ are included in the service kits
Recommended spare parts: service kit.

900-120/3

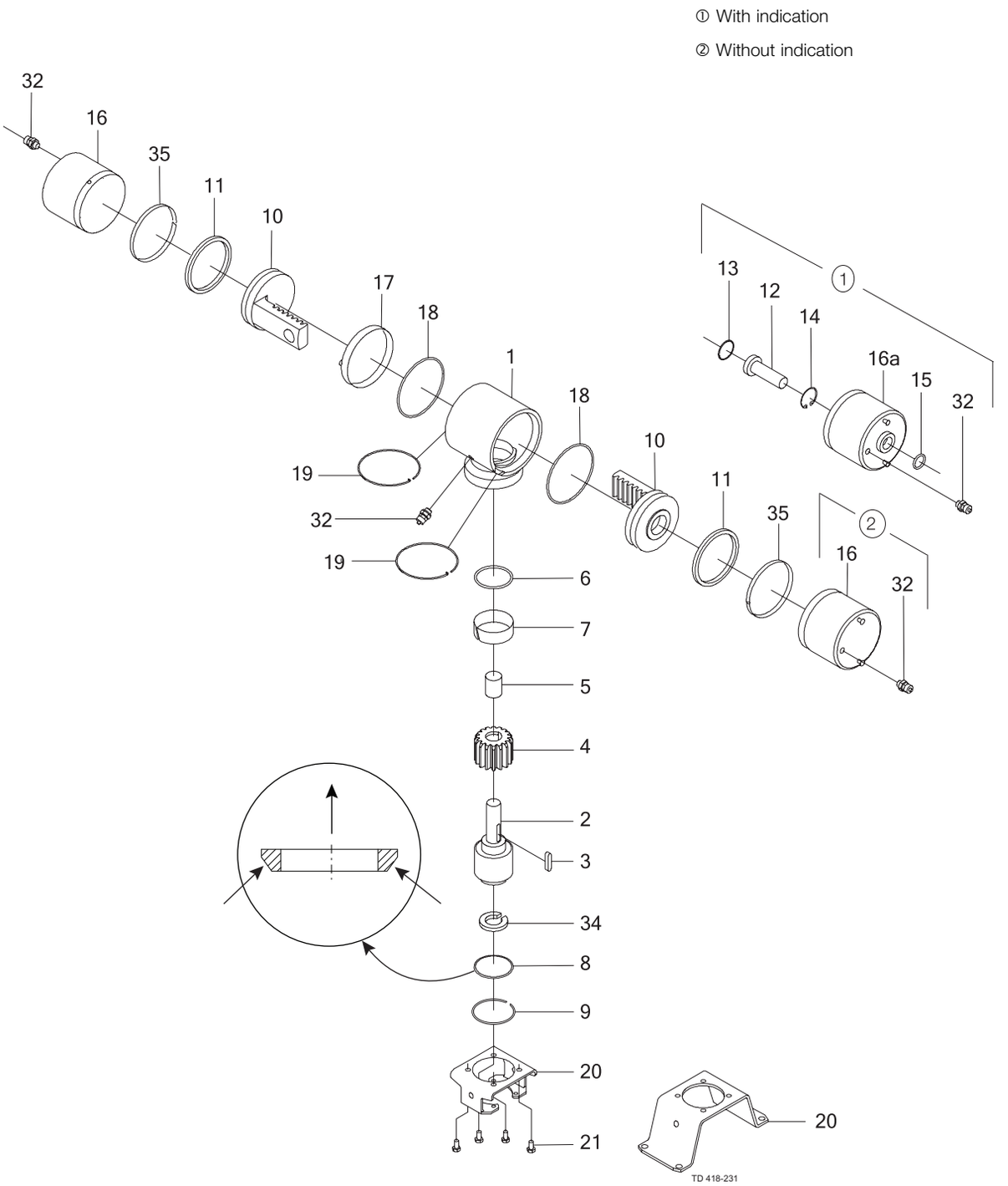
① With indication
② Without indication
32
16
35
11
10
17
18
1
18
10
11
35
19
32
19
6
7
5
4
2
3
34
8
9
20
21
13
12
14
16a
15
32
①
16
32
②
20
TD 418-231

Pos		Qty	Denomination	25-76 mm DN 25-65	With indication 25-76 mm DN 25-65	101.6 mm DN 80-100	With indication 101.6 mm DN 80-100
1		1	Chassis	9612480901	9612480901	9612480901	9612480901
2		1	Spindle	9612479601	9612479601	9612493301	9612493301
3		1	Wedge	9612493701	9612493701	9612493701	9612493701
4		1	Gear wheel	9612479501	9612479501	9612479501	9612479501
5		1	Bearing	9611993172	9611993172	9611993172	9611993172
6	□	1	O-ring	9611991413	9611991413	9611991413	9611991413
7	□	1	Guide ring	9612493801	9612493801	9612493801	9612493801
8	□	1	Bearing	9612494101	9612494101	9612494101	9612494101
9		1	Lock ring	9612480301	9612480301	9612480301	9612480301
10		1	Piston	9612493901	9612493901		
		2	Piston			9612493901	9612493901
11	□	1	O-ring, (Period 2003 -->)	9611994215	9611994215		
		2	O-ring, (Period 2003 -->)			9611994215	9611994215
		1	O-ring, (Period <-- 2003)	9611992233	9611992233		
		2	O-ring, (Period <--2003)			9611992233	9611992233
12		1	Indication stem		9612480501		9612480501
13		1	O-ring		9611990096		9611990096
14		1	Circlip		9611993171		9611993171
15	□	1	O-ring (Period --> 2021)		9611992129		9611992129
		1	O-ring (Period 2021 -->)		8010015956		8010015956
16		1	Cylinder	9612479903			9612479903
		2	Cylinder			9612479903	
16a		1	Cylinder		9612480001		9612480001
		1	Cylinder (Period 2021 -->)		8010014909		8010014909
17		1	Cover	9612479701	9612479701		
18	□	2	O-ring	9611993170	9611993170	9611993170	9611993170
19		2	Lock wire	9612482501	9612482501	9612482501	9612482501
20		1	Bonnet, MH25	9612495901	9612495901		
		1	Bonnet, MH38	9612496001	9612496001		
		1	Bonnet, MH51	9612496101	9612496101		
		1	Bonnet, MH63	9612496201	9612496201		
		1	Bonnet, MH76	9612505101	9612505101		
		1	Bonnet, MH89			9612505201	9612505201
		1	Bonnet, MH102			9612480801	9612480801
21		4	Screw	22103102	22103102	22103102	22103102
32		2	Air fitting	9611991988	9611991988		
		3	Air fitting			9611991988	9611991988
34		1	Spindle extension (only for MH25)	9612482001	9612482001		
35	□	1	Guide ring, (Period 2003-)	9612940701	9612940701		
		2	Guide ring, (Period 2003-)			9612940701	9612940701

		25-51 mm DN25-50	With indication 25-51 mm DN25-50	63.5-76 mm DN65	With indication 63.5-76 mm DN65
Service kit for actuator (Period 2021-->)					
□	**Service kits**	**9611924194**	**8010018264**	**9611924196**	**8010018265**
Service kit for actuator (Period 2003 -->)					
□	**Service kit**	**9611924194**	**9611924195**	**9611924196**	**9611924197**
Service kit for actuator (Period <-- 2003)					
□	**Service kit**	**9611924175**	**9611924176**	**9611924177**	**9611924178**

Parts marked with □ are included in the service kits
Recommended spare parts: service kit.

900-121/5

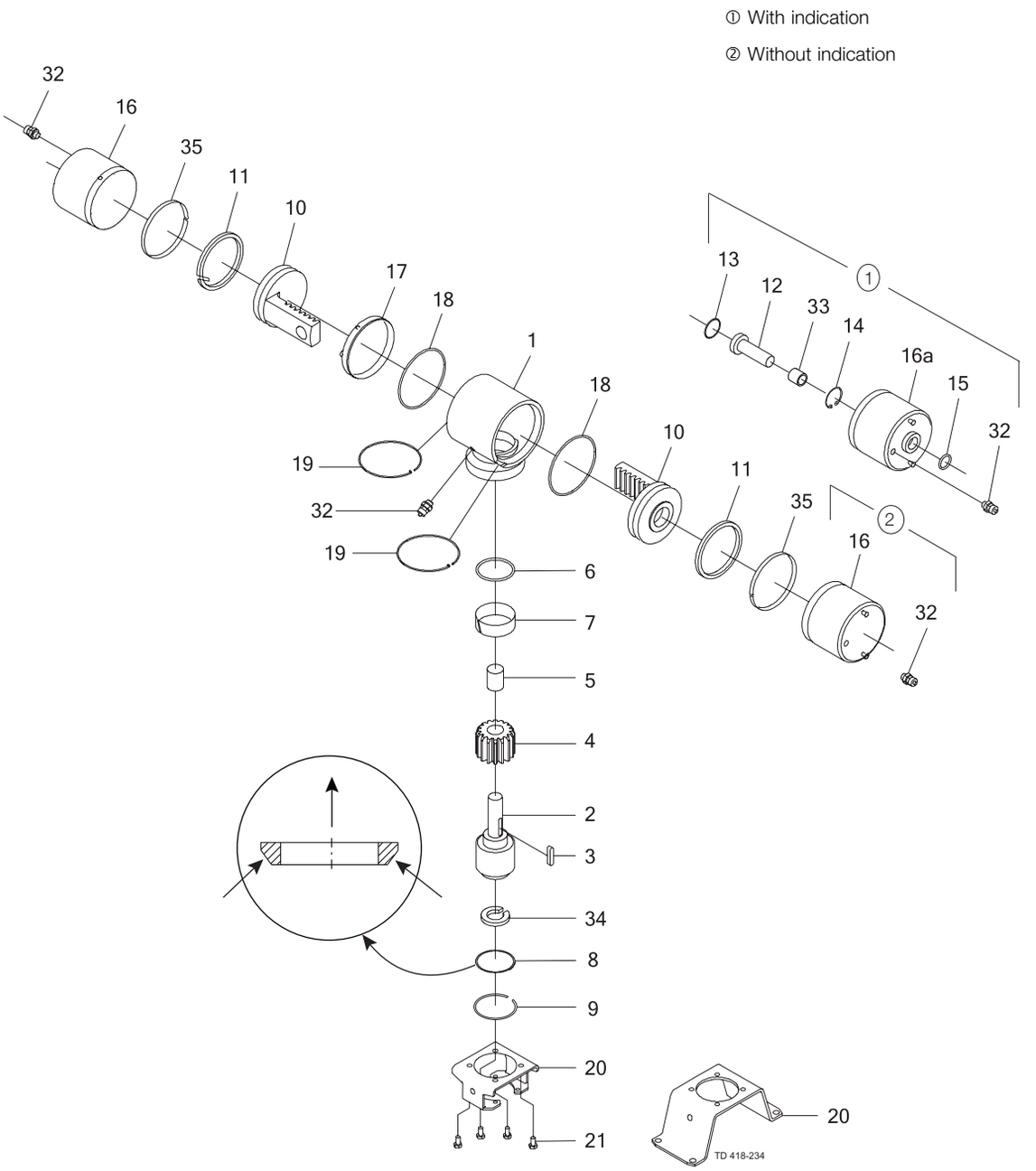
① With indication
② Without indication
32
16
35
11
10
17
18
1
18
10
11
35
16
32
13
12
33
14
16a
15
32
19
32
19
6
7
5
4
2
3
34
8
9
20
21
20
TD 418-234

Pos		Qty	Denomination	25-76mm DN25-65	With indication 25-76mm DN25-65	101.6mm DN80-100	With indication 101.6mm DN80-100
1		1	Chassis	9612480901	9612480901	9612480901	9612480901
2		1	Spindle	9612479601	9612479601	9612493301	9612493301
3		1	Wedge	9612493701	9612493701	9612493701	9612493701
4		1	Gear wheel	9612479501	9612479501	9612479501	9612479501
5		1	Bearing	9611993172	9611993172	9611993172	9611993172
6	□	1	O-ring	9611991413	9611991413	9611991413	9611991413
7	□	1	Guide ring	9612493801	9612493801	9612493801	9612493801
8	□	1	Bearing	9612494101	9612494101	9612494101	9612494101
9		1	Lock ring	9612480301	9612480301	9612480301	9612480301
10		1	Piston	9612493904	9612493903		
		1	Piston				9612493902
		2	Piston			9612493905	9612493905
11	□	1	O-ring, (Period 2003 -->)	9611994215	9611994215		
		2	O-ring, (Period 2003 -->)			9611994215	9611994215
		1	O-ring, (Period <-- 2003)	9611992233	9611992233		
		2	O-ring, (Period <-- 2003)			9611992233	9611992233
12		1	Indication stem, (Period 2021 -->)		9612506301		9612506301
13		1	O-ring		9611990096		9611990096
14		1	Circlip		9611993171		9611993171
15	□	1	O-ring		9611992129		9611992129
		1	O-ring (Period 2021 --->)		8010015956		8010015956
16		1	Cylinder	9612479902			9612479904
		2	Cylinder			9612479904	
16a		1	Cylinder		9612480002		9612480003
		1	Cylinder (Period 2021 --->)		8010014910		8010014911
17		1	Cover	9612479901	9612479901		
18	□	2	O-ring	9611993170	9611993170	9611993170	9611993170
19		2	Lock wire	9612482501	9612482501	9612482501	9612482501
20		1	Bonnet, MH25	9612495901	9612495901		
		1	Bonnet, MH38	9612496001	9612496001		
		1	Bonnet, MH51	9612496101	9612496101		
		1	Bonnet, MH63	9612496201	9612496201		
		1	Bonnet, MH76	9612505101	9612505101		
		1	Bonnet, MH89			9612505201	9612505201
		1	Bonnet, MH102			9612480801	9612480801
21		4	Screw	22103102	22103102	22103102	22103102
32		2	Air fitting	9611991988	9611991988		
		3	Air fitting			9611991988	9611991988
33		1	Bush		9611993437		9611993437
34		1	Spindle extension (only for MH25)	9612482001	9612482001		
35	□	1	Guide ring, (Period 2003-)	9612940701	9612940701		
		2	Guide ring, (Period 2003-)			9612940701	9612940701

		25-51 mm DN25-50	With indication 25-51 mm DN25-50	63.5-76 mm DN65	With indication 63.5-76 mm DN65
Service kit for actuator (Period 2021-->)					
□	**Service kit**	**9611924194**	**8010018264**	**9611924196**	**8010018265**
Service kit for actuator (Period 2003-->)					
□	**Service kit**	**9611924194**	**9611924195**	**9611924196**	**9611924197**
Service kit for actuator (Period <-- 2003)					
□	**Service kit**	**9611924175**	**9611924176**	**9611924177**	**9611924178**

Parts marked with □ are included in the service kits.
Recommended spare parts: service kit.

900-122/4

1.11

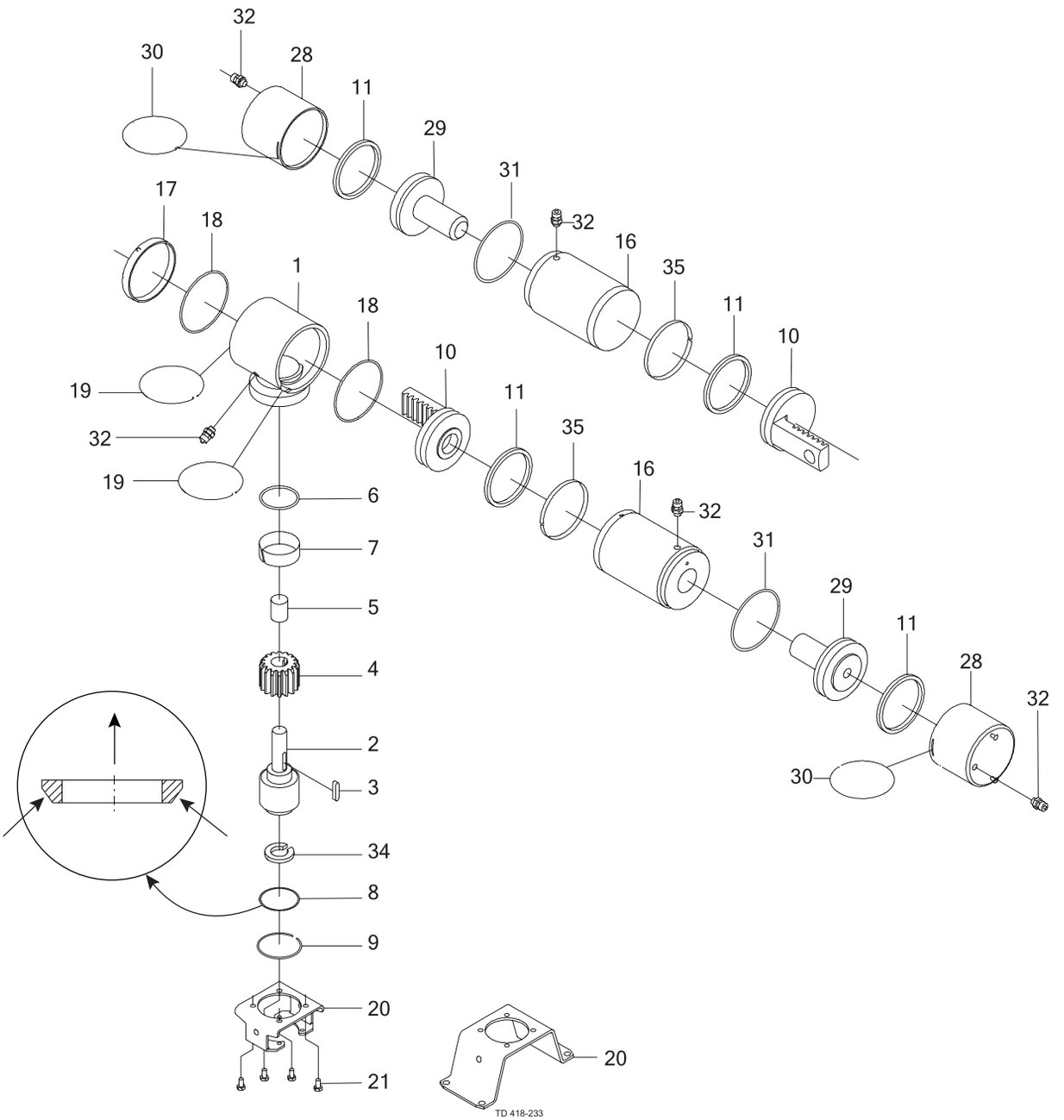
32
30
28
11
29
31
17
18
32
16
35
11
10
1
18
10
19
11
35
32
16
19
32
6
7
31
29
5
11
4
28
32
2
30
3
34
8
9
20
21
20
TD 418-233

Pos		Qty	Denomination	25-76mm DN25-65	101.6mm DN80-100
1		1	Chassis	9612480901	9612480901
2		1	Spindle	9612479601	9612493301
3		1	Wedge	9612493701	9612493701
4		1	Gear wheel	9612479501	9612479501
5		1	Bearing	9611993172	9611993172
6	□	1	O-ring	9611991413	9611991413
7	□	1	Guide ring	9612493801	9612493801
8	□	1	Bearing	9612494101	9612494101
9		1	Lock ring	9612480301	9612480301
10		1	Piston	9612493904	
		2	Piston		9612493905
11	□	2	O-ring, (Period 2003-)	9611994215	
		4	O-ring, (Period 2003-)		9611994215
		2	O-ring, (Period -2003)	9611992233	
		4	O-ring, (Period -2003)		9611992233
16		1	Cylinder	9612482201	
		2	Cylinder		9612482202
17		1	Cover	9612479901	
18	□	2	O-ring	9611993170	9611993170
19		2	Lock wire	9612482501	9612482501
20		1	Bonnet, MH25	9612495901	
		1	Bonnet, MH38	9612496001	
		1	Bonnet, MH51	9612496101	
		1	Bonnet, MH63	9612496201	
		1	Bonnet, MH76	9612505101	
		1	Bonnet for , MH89		9612505201
		1	Bonnet, MH102		9612480801
21		4	Screw	22103102	22103102
28		1	Auxiliary cylinder	9612482301	
		2	Auxiliary cylinder		9612482301
29		1	Auxiliary piston	9612482401	
		2	Auxiliary piston		9612482401
30		1	Lock wire	9612495801	
		2	Lock wire		9612495801
31		1	O-ring	9611990577	
		2	O-ring		9611990577
32		3	Air fitting	9611991988	
		5	Air fitting		9611991988
34		1	Spindle extension, (only for MH25)	9612482001	9612482001
35	□	1	Guide ring, (Period 2003-)	9612940701	
		2	Guide ring, (Period 2003-)		9612940701

		25-76 mm DN25-65	101.6 mm DN80-100
Service kit for actuator (Period 2003-)			
□	**Service kit**	**9611924196**	**9611924198**
Service kit for actuator (Period - 2003)			
□	**Service kit**	**9611924177**	**9611924180**

Parts marked with □ are included in the service kits.
Recommended spare parts: service kit.

900-123/4

1.11

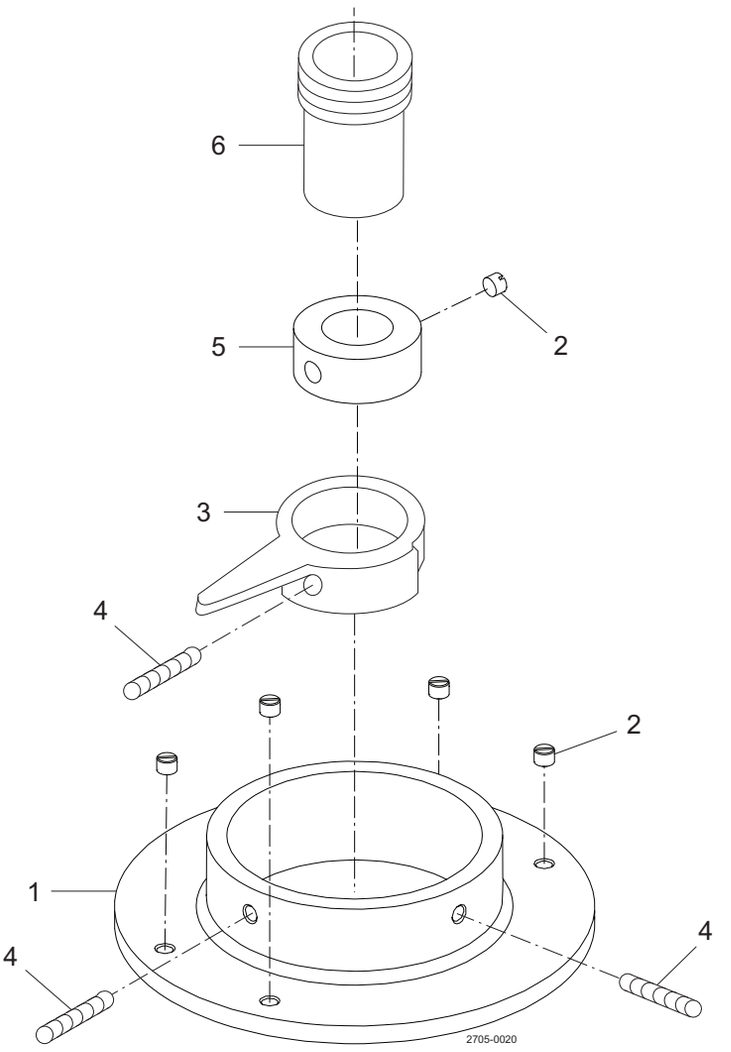

Pos	Qty	Denomination	9612506201 25 mm DN25	9612506202 38 mm DN40	9612506203 51-76 mm DN50-65	9612506204 101.6 mm DN80-100
1	1	Mounting bracket	9612506402	9612506403	9612506403	9612506001
2	5	Screw for mounting bracket	9611991255	9611991255	9611991255	9611991255
3	1	Indicator	9611416690	9611416690	9611416690	9611416690
4	2	Screw for indicator	9611991754	9611991754	22153309	
5	1	Bearing	9612505701	9612505701	9612505702	
6	1	Safety screw	9612505601	9612505601	9612505801	9612506101

900-124/2

1.11

D10

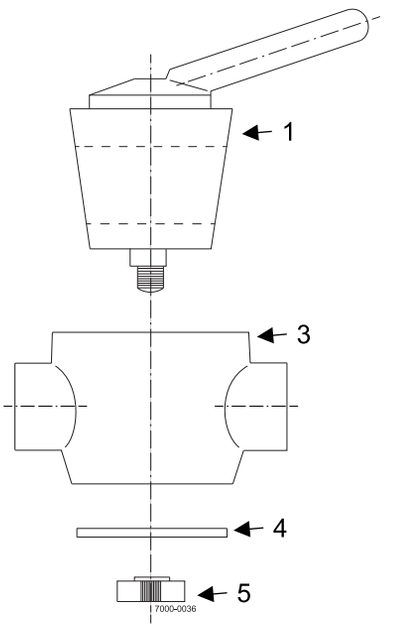

D11

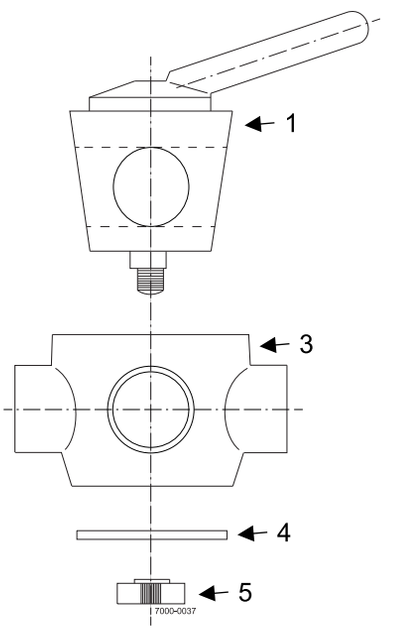

Pos	Qty	Denomination	1”	1 1/2”	2”	2 1/2”	3”
1	1	D10 Rubber Plug		621296	628243	624188	624823
	1	D11 Rubber Plug		621740	628246	624192	625001
	1	Stainless Steel Plug Assembly	NA	NA	NA	NA	NA
3	1	Valve Body	NA	NA	NA	NA	NA
4	1	D10/11 plug valve bottom washers	620310	621490	622635	623951	624829
5	1	D10/11 Locknut	620318	620318	620318	620318	620318
	1	D10F/FR/FL Locknut	620318	620318	620318	620318	620318

D10F

1 1/2" and 2"

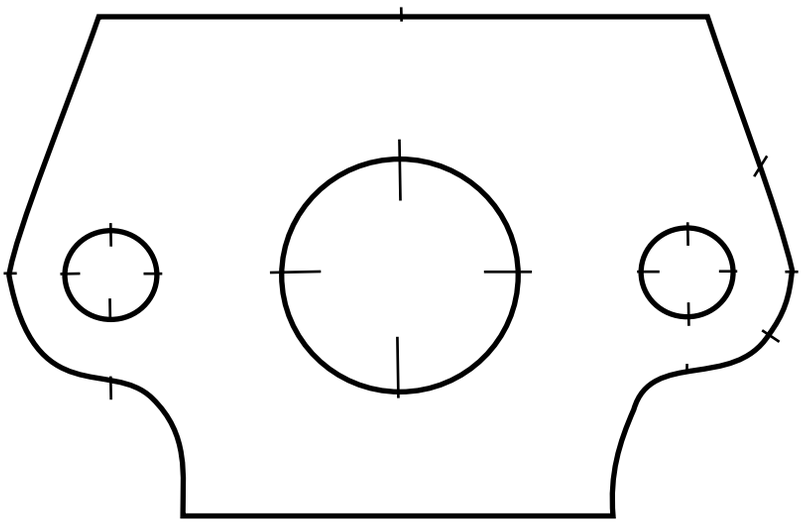

2 1/2" and 3"

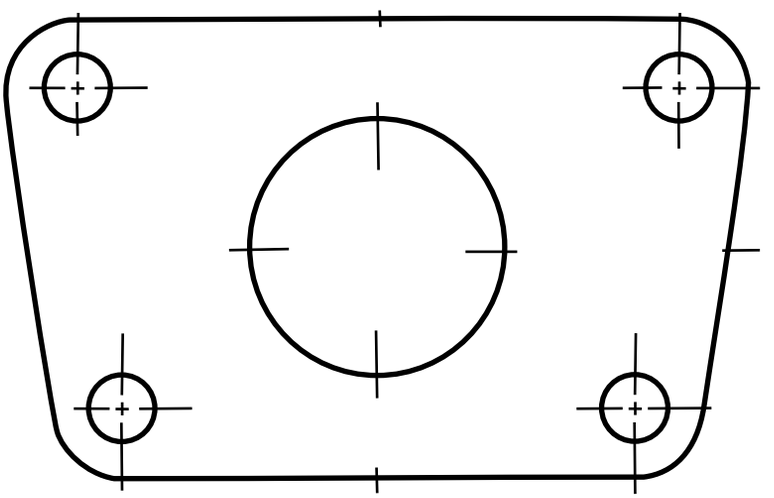

Pos	Qty	Denomination	1”	1 1/2”	2”	2 1/2”	3”
	1	Tank Outlet Gaskets (PTFE only)		296652	296651	750347	755738

Not manufactured anymore

1.11

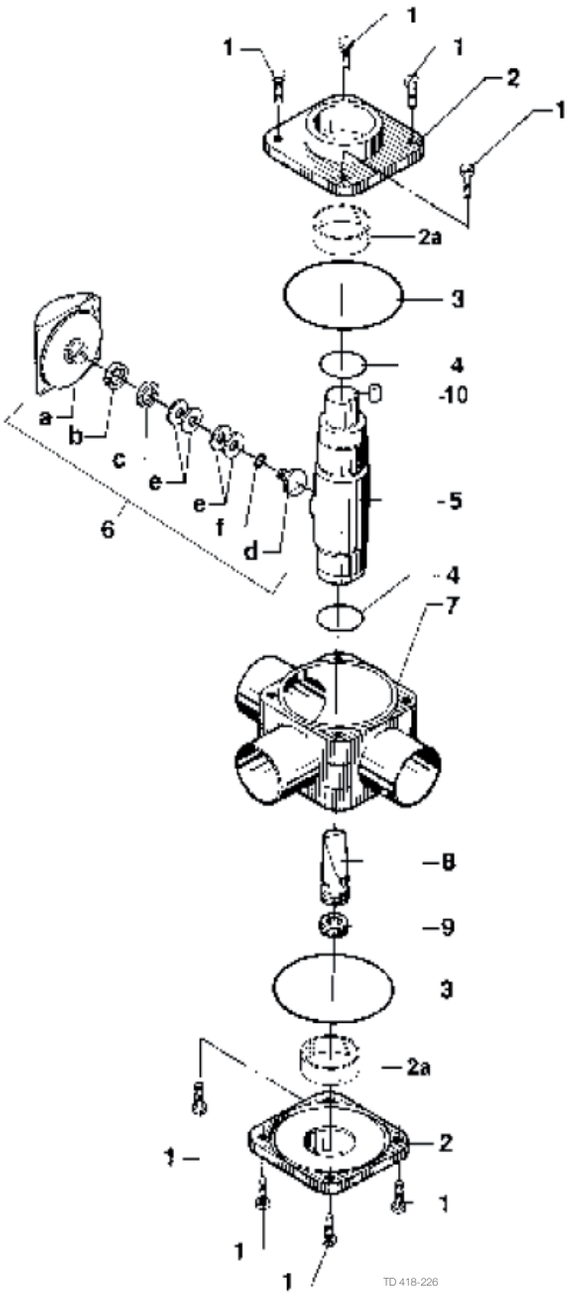

Bearing and lid for bearing

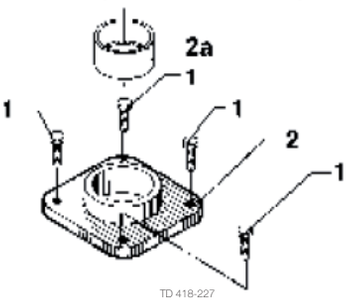

Double shutter

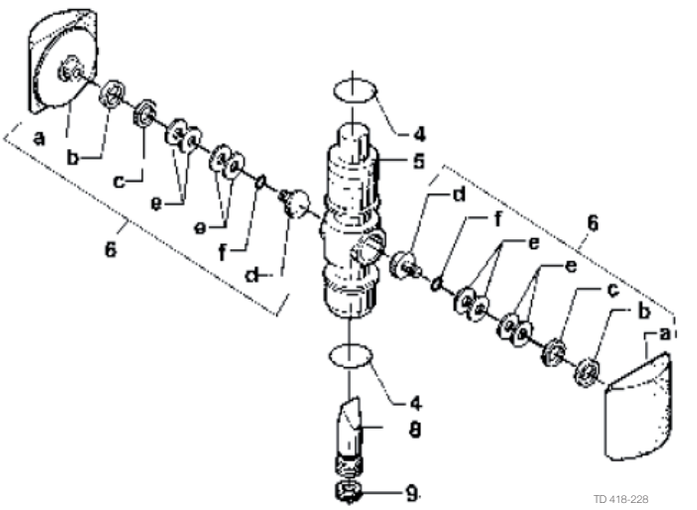

Pos	Qty	Denomination	25 mm	38 mm	51 mm	63.5 mm	76 mm
Type MHI							
1	8	Screw	9611993351	9611990456	9611990456	9611991910	
	16	Screw					
2	2	Lid for guide ring, (standard)					
	2	Lid for bearing, ("Old type")					
2a	2	Guide ring, (standard)	9612511602	9612511603	9612511604	9612511604	9612511605
	2	Bearing, bronze (for "old lid")					
	2	Bearing, PTFE (for "old lid")					
3	2	O-ring, EPDM (standard)	9611992243	9611992237	9611992240	9611991137	9611992245
	2	O-ring, NBR	9611992242	9611992236	9611992239	9611992228	22340685
	2	O-ring, FPM	9611992244	9611992238	9611992241	9611992229	9611992246
4	2	O-ring, EPDM (standard)	9611992252	9611992255	9611992255	9611992255	26010434
	2	O-ring, NBR	9611993440	9611992254	9611992254	9611992254	9611990076
	2	O-ring, FPM	9611992253	9611992256	9611992256	9611992256	9611993442
5	1	Shaft, AISI 316L	9612262801	9612262901	9612263001	9612263101	9612263201
6	1	Shutter unit, PTFE/316L (standard)					
	1	Shutter unit, Flourosint/316L					
6a	1	Shutter, PTFE (standard)					
	1	Shutter, Flourosint					
	1	Shutter, PTFE					
6b	1	Seal ring					
6c	1	Support ring					
6d	1	Adjustment key					
6e	4	Cup spring	9611992316	9611992316	9611992316	9611992318	9611992319
6f	1	O-ring	9611990026	9611990026	9611992880	9611992880	9611992881
7	1	Valve body , 2-way AISI 316L					
	1	Valve body, 3-way AISI 316L					
8	1	Tightening device	9612451601	9612269201	9612269301	9612269401	9612269501
9	1	Safety screw	9612400801	9612269801	9612269801	9612269801	9612401501
10	1	Wedge	9612436701	9612436701	9612436701	9612436701	9612449101
Type MHE							
1	8	Screw	9611993351	9611990456	9611990456	9611991910	
	16	Screw					9611991910
2	2	Lid for guide ring, (standard)	9612511201	9612511302	9612511402	9612511502	9612513402
	2	Lid for bearing					
2a	2	Guide ring, (standard)	9612511602	9612511603	9612511604	9612511604	9612511605
	2	Bearing, bronze					
	2	Bearing, PTFE					
3	2	O-ring, EPDM (standard)	9611992243	9611992237	9611992240	9611991137	9611992245
	2	O-ring, NBR	9611992242	9611992236	9611992239	9611992228	22340685
	2	O-ring, FPM	9611992244	9611992238	9611992241	9611992229	9611992246
4	2	O-ring, EPDM (standard)	9611992252	9611992255	9611992255	9611992255	26010434
	2	O-ring, NBR	9611993440	9611992254	9611992254	9611992254	9611990076
	2	O-ring, FPM	9611992253	9611992256	9611992256	9611992256	9611993442
5	1	Shaft, AISI 316L					
6	2	Shutter unit, PTFE/316L					
	2	Shutter unit, Flourosint/316L					
6a	2	Shutter, Flourosint					
	2	Shutter, PTFE					
6b	2	Seal ring					
6c	2	Support ring					
6d	2	Adjustment key					
6e	8	Cup spring	9611992316	9611992316	9611992316	9611992318	9611992319
6f	2	O-ring	9611990026	9611990026	9611992880	9611992880	9611992881
7	1	Valve body, 2-way AISI 316L					
	1	Valve body, 3-way AISI 316L					
	1	Valve body, 4-way AISI 316L					
8	1	Tightening device	9612269101	9612279701	9612279801	9612279901	9612280001
9	1	Safety screw	9612400801	9612269801	9612269801	9612269801	9612401501
10	1	Wedge	9612436701	9612436701	9612436701	9612436701	9612449101

Not manufactured anymore

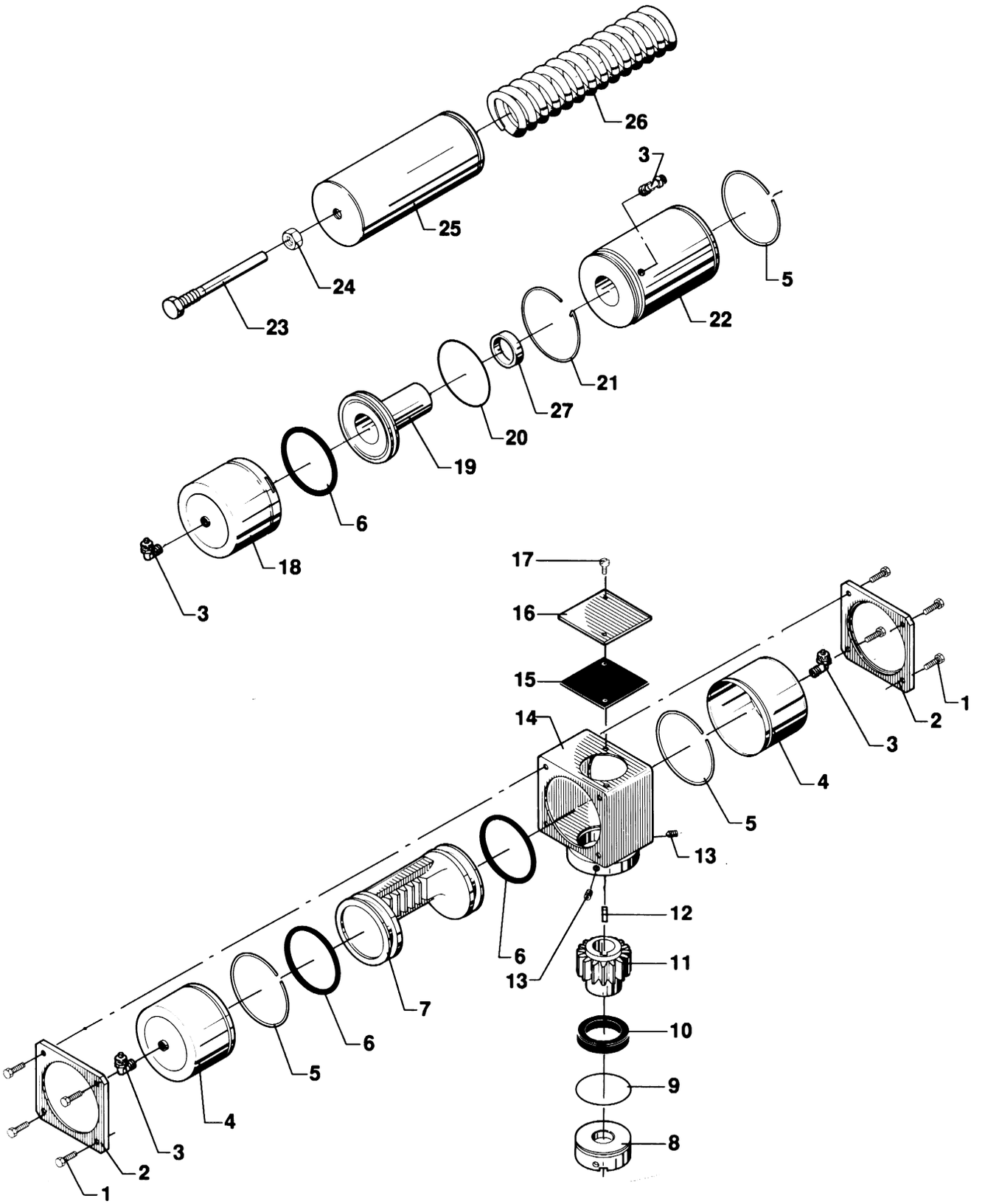

Pos	Qty	Denomination	25 mm	38 mm	51 mm	63,5 mm	76 mm	89-101.6 mm
type KH531, KH532, KH533, KH534, KH521 and KH2								
1	8	Screw						
2	2	Flange						
3	2	Air fitting, KH531, KH532						
	3	Air fitting, KH533						
	4	Air fitting, KH534						
4	2	Cylinder KH531						
	2	Cylinder KH532, KH533						
5	2	Lock ring						
6	2	O-ring, KH531, KH532	9611992185	9611992185			9611992230	
	3	O-ring, KH533	9611992185	9611992185	9611992185			9611992230
7	1	Piston rack, KH531						
	1	Piston rack, KH532, KH533						
	1	Piston rack, K534						
8	1	Adaptor, KH531, KH532, KH533, KH534						
9	1	O-ring, KH531, KH532, KH533, KH534	9611990022					
10	1	Seal ring						
	1	O-ring	22340625					
11	1	Gear wheel						
12	1	Key	9612436701	9612436701	9612436701	9612436701	9612436701	9612449101
13	2	Lock screw						
14	1	Valve body						
15	1	Packing						
16	1	Cover						
17	2	Screw						
18	1	Auxiliary cylinder, KH533						
	2	Auxiliary cylinder, KH534						
19	2	Auxiliary piston, KH533						
	2	Auxiliary piston, KH534						
20	1	O-ring, KH533, KH534	9611990023	9611990023	9611990023			9611992239
21	1	Locking ring, KH533, KH534						
22	1	Cylinder, KH533						
	2	Cylinder, KH534						

Koltek Actuator
type KH 521

Pos	Qty	Denomination	25 mm	38 mm	51 mm	63.5 - 76 mm
1	8	Screw				
2	2	Flange				
3	3	Air fitting				
4	1	Cylinder				
5	2	Lock ring				
6	3	O-ring				9611992233
7	1	Piston ring	Not	available	any	more
8	1	Adaptor				
9	1	O-ring	9611990022			
10	1	Seal ring				
	1	O-ring	22340625			
11	1	Gear wheel				
	1	Gear wheel (76 mm)				
12	1	Wedge	9612436701	9612436701	9612436701	9612436701
13	2	Lock screw				
14	1	Chassis				
15	1	Packing				
16	1	Cover				
17	2	Screw				
18	1	Auxiliary cylinder				
19	1	Auxiliary piston				
20	1	O-ring	9611990023	9611990023	9611990023	
21	1	Locking ring				
27	1	Spacer				

Not manufactured anymore

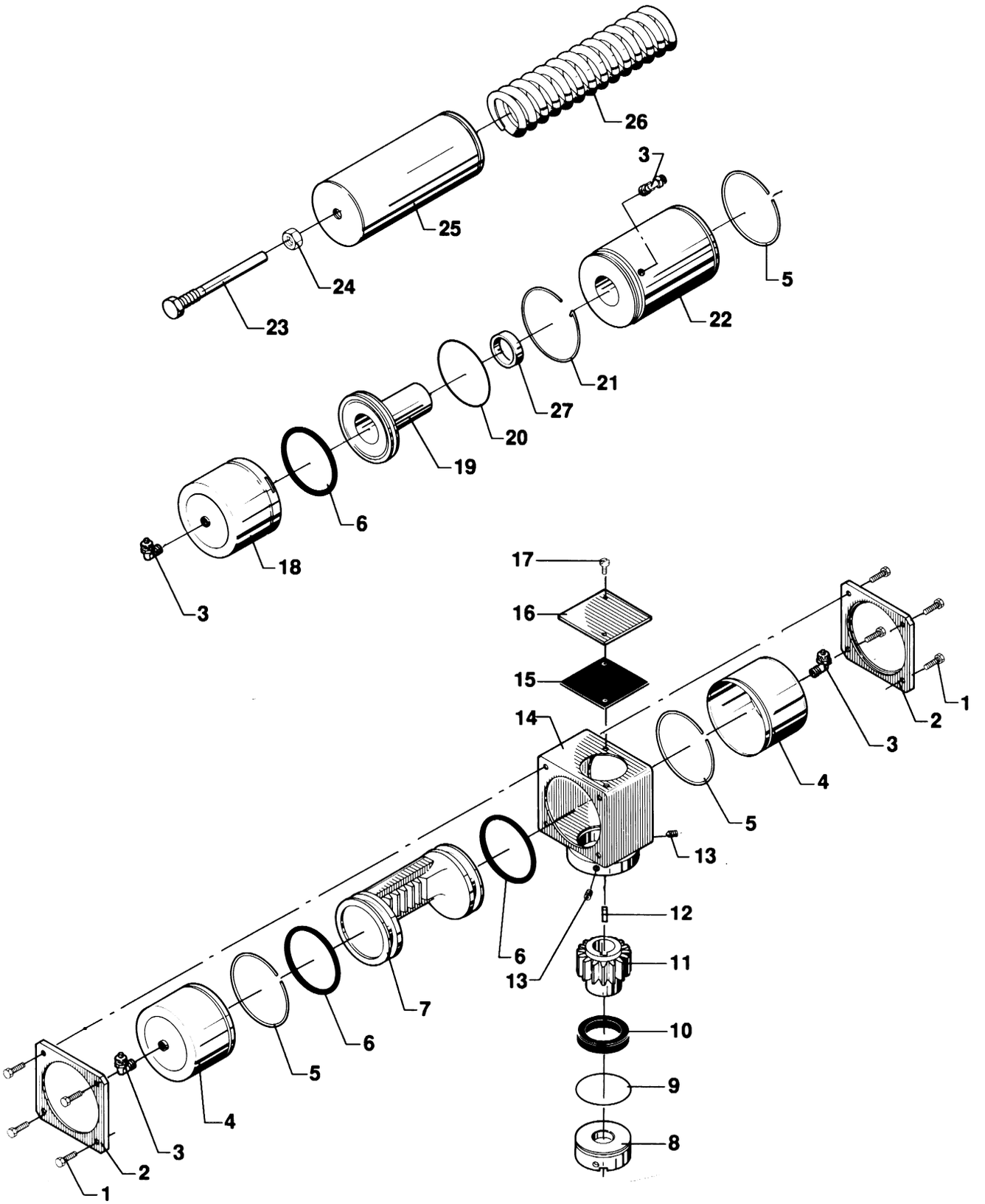

Koltek Actuator
type KH2

Pos	Qty	Denomination	25 mm	38 mm	51 mm
1	8	Screw	9611992259	9611992259	9611992259
2	2	Flange	9612273001	9612273101	9612273201
3	1	Air fitting	9611992261	9611992261	9611992261
4	1	Cylinder	9612273301	9612273401	9612273401
5	2	Lock ring	9612276501	9612276601	9612276601
6	1	O-ring	26019037	9611992233	9611992233
7	1	Piston rack	Not	available	any more
8	1	Adaptor	9612273901		
9	1	O-ring	9611990022		
10	1	Seal ring		9612276801	9612276901
	1	O-ring	22340625		
11	1	Gear wheel	9612274001	9612274101	9612274101
12	1	Wedge	9612436701	9612436701	9612436701
13	2	Lock screw	9611992332	9611992332	9611992332
14	1	Chassis	9612274301	9612274401	9612274401
15	1	Packing	9612277901	9612277901	9612277901
16	1	Cover	9612278001	9612278001	9612278001
17	2	Screw	9611992334	9611992334	9611992334
23	1	Bolt	9612280101	9612280102	9612280102
24	1	Nut	9611990587	9611990587	9612280301
25	1	Cylinder	9612280201	9612280301	9612282101
26	1	Spring	9612282001	9612282101	9612282201

Reg. 2.16.8
2000-05

Intro. 9605

Not manufactured anymore

1.11

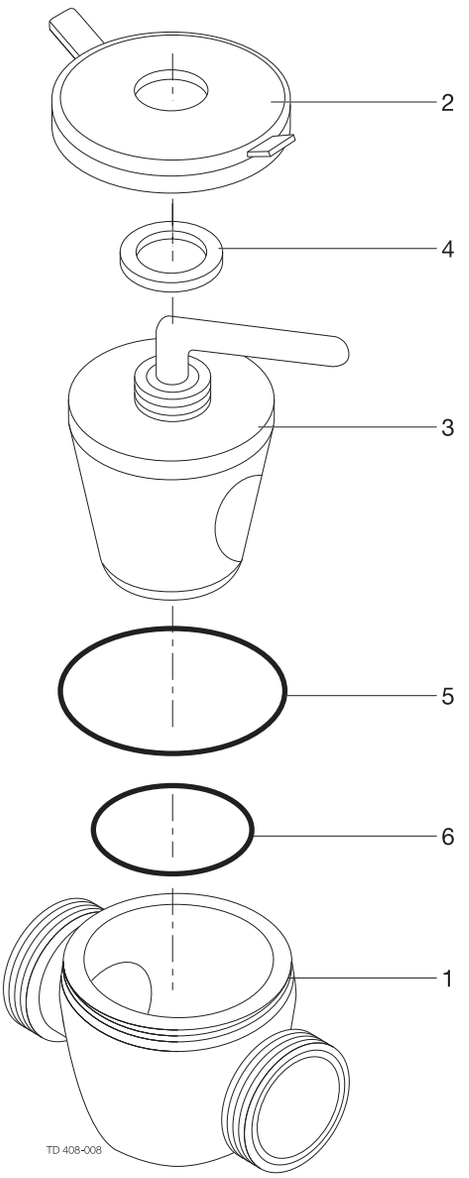

Pos		Qty	Denomination	25 mm	38 mm	51 mm	63.5 mm	76 mm
1		1	Straightway-body					
2		1	Cover	9611101277	9611101278	9611101279	9611101280	9611101281
3		1	Plug					
4	□	1	Ring	9611101282	52113308	52113308	52113309	52113309
5	□	1	O-ring	9611990001	9611990003	9611990005	9611990007	9611990008
6	□	1	O-ring	9611990002	9611990004	9611990006	9611990005	9611990009

		25 mm	38 mm	51 mm	63.5 mm	76 mm
□	**Service kit**	**9611923016**	**9611923017**	**9611923018**	**9611923019**	**9611923025**

Parts marked with □ are included in the service kits

Recommended spare parts: Service kits

900-425

Not manufactured anymore

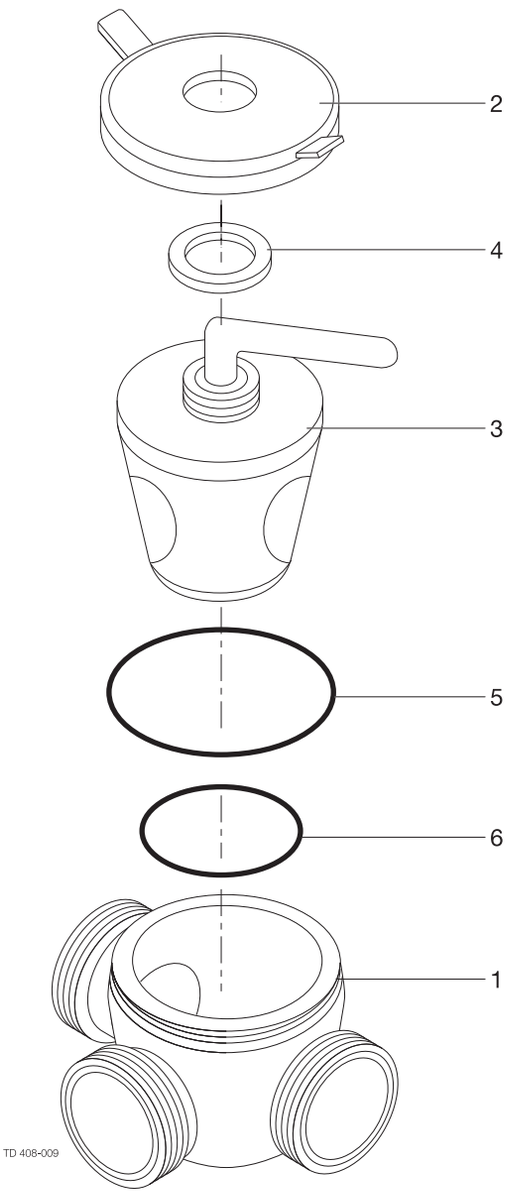

Pos		Qty	Denomination	25 mm	38 mm	51 mm	63.5 mm	76 mm
AISI 304								
1		1	3-way-body					
2		1	Cover	9611101277	9611101278	9611101279	9611101280	9611101281
3		1	Plug					
4	□	1	Ring	9611101282	52113308	52113308	52113309	52113309
5	□	1	O-ring	9611990001	9611990003	9611990005	9611990007	9611990008
6	□	1	O-ring	9611990002	9611990004	9611990006	9611990005	9611990009

		25 mm	38 mm	51 mm	63.5 mm	76 mm
□	**Service kit**	**9611923016**	**9611923017**	**9611923018**	**9611923019**	**9611923025**

Parts marked with □ are included in the service kits

Recommended spare parts: Service kits

900-424

1.12 Single seat valves

Alfa Laval's Single Seat Valve is an extremely reliable and hygienic design for stopping or diverting flow in single or multi-directional systems.



700 series (US version)

741/761 valve, change-over 1.12.1004
741/761 valve, shut-off 1.12.1006
761/761 TR reverse acting valve, 27, 47 . . . . . 1.12.1008
761 Y-body valves 1.12.1010
762 kettle valves 29, 31, 33, 35 . . . . . 1.12.1012
762 tank outlet valve 13, 21 22, 57 ,58, 123 . . . . . 1.12.1016
762 tangential valves 47, 48, 49, 50, 51, 52 . . . . . 1.12.1020
736-X swap valves, short stroke 1.12.1022
736-X stem swap valve, long stroke 1.12.1024
736-TR-X swap valves, short stroke 1.12.1026
736TR-X stem swap valve, long stroke 1.12.1028
736TR2-X stem swap valve, short stroke 1.12.1030
736TR2-X stem swap valve, long stroke 1.12.1032
Tank and kettle valve flange, ferrule, tank pods dimensions 1.12.1034
761/741 TR shut-off, TR/TR2 stems 1.12.1036
700/800 LP shut-off stems 1.12.1038
700/800 spherical shut-off stems (replaced by "LP" stems) 1.12.1039
762 227 MRAL flow diversion valve 1.12.1040
762 flow diversion valve 1.12.1042

Actuators for 700 series (US version)

700 series actuators 1.12.1044

1.12 Single seat valves

Alfa Laval's Single Seat Valve is an extremely reliable and hygienic design for stopping or diverting flow in single or multi-directional systems.

800 Series Aseptic Valves
861 series valves, shut-off 1.12.1052

Unique SSV
Unique SSV, shut-off 1.12.1054
Unique SSV, shut-off (US version) 1.12.1056
Unique SSV, shut-off, TR2 . . . . . 1.12.1058
Unique SSV, change-over 1.12.1060
Unique SSV, change-over (US version) 1.12.1062
Unique SSV, change-over, TR2 . . . . . 1.12.1064
Unique SSV, actuator for ATEX 1.12.1066

Unique SSV, valve sizes DN125,DN150, 4" and 6"
Unique SSV, shut-off, DN125 to DN150 . . . . . 1.12.1068
Unique SSV, change-over, DN125 to DN150 . . . . . 1.12.1072
Unique SSV, 4" XL stroke, shut-off (US version) 1.12.1076
Unique SSV, 4" XL stroke, shut-off, TR2 (US version) 1.12.1078
Unique SSV, 6", TR2 (US version) 1.12.1080
Unique SSV, 6", low profile plug (US version) 1.12.1082

Unique SSV, direct acting
Unique SSV, direct acting, shut-off valve 1.12.1084
Unique SSV, direct acting, shut-off valve, TR2 . . . . . 1.12.1088
Unique SSV, direct acting, shut-off valve (US version) 1.12.1090
Unique SSV, direct acting, shut-off valve TR2 (US version) 1.12.1094

Unique SSV, reverse acting
Unique SSV, reverse acting, shut-off 1.12.1098
Unique SSV, reverse acting, shut-off (US version) 1.12.1102
Unique SSV, reverse acting, shut-off, TR2 . . . . . 1.12.1104
Unique SSV, reverse acting, change-over 1.12.1106
Unique SSV, reverse acting, change-over (US version) 1.12.1110
Unique SSV, reverse acting, change-over, TR2 . . . . . 1.12.1114

Unique SSV, long stroke
Unique SSV, long stroke, shut-off 1.12.1116
Unique SSV, long stroke, shut-off (US version) 1.12.1118
Unique SSV, long stroke, shut-off, TR2 . . . . . 1.12.1120
Unique SSV, long stroke, change-over 1.12.1122
Unique SSV, long stroke, change-over (US version) 1.12.1124
Unique SSV, long stroke, change-over, TR2 . . . . . 1.12.1126

1.12 Single seat valves

Alfa Laval's Single Seat Valve is an extremely reliable and hygienic design for stopping or diverting flow in single or multi-directional systems.

Unique SSV, aseptic
Unique SSV, aseptic, shut-off 1.12.1128
Unique SSV, aseptic, shut-off (US version) 1.12.1130
Unique SSV, aseptic, change-over 1.12.1132
Unique SSV, aseptic, change-over (US version) 1.12.1134

Unique SSV, two step
Unique SSV, two step, shut-off 1.12.1138
Unique SSV, two step, shut-off (US version) 1.12.1142
Unique SSV, two step, change-over 1.12.1144
Unique SSV, two step, change-over, TR2 . . . . . 1.12.1148
Unique SSV, two step, change-over (US version) 1.12.1152

Unique SSV, tangential
Unique SSV, tangential, shut-off 1.12.1156
Unique SSV, tangential, shut-off, TR2 . . . . . 1.12.1158
Unique SSV, tangential, shut-off (US version) 1.12.1160
Unique SSV, tangential, change-over 1.12.1162
Unique SSV, tangential, change-over, TR2 . . . . . 1.12.1164
Unique SSV, tangential, change-over (US version) 1.12.1166

Unique SSV, tank outlet
Unique SSV, tank outlet 1.12.1168
Unique SSV, tank outlet, TR2 . . . . . 1.12.1170
Unique SSV, tank outlet (US version) 1.12.1172
Unique SSV, tank outlet, reverse acting 1.12.1174
Unique SSV, tank outlet, reverse acting, TR2 . . . . . 1.12.1176
Unique SSV, tank outlet, reverse acting, (US version) 1.12.1178

Unique SSV, Y-body
Unique SSV, Y-body 1.12.1182
Unique SSV, Y-body (US version) 1.12.1184

Unique SSV, manually operated
Unique SSV, manually operated, shut-off 1.12.1186
Unique SSV, manually operated, change-over 1.12.1188
Unique SSV, manually regulating valve 1.12.1190
Unique SSV, manually regulating RF 1.12.1192
Unique SSV, aseptic manually operated, regulating valve 1.12.1194
Unique SSV, aseptic manually operated, regulating valve (US version) 1.12.1196
Unique SSV, aseptic manually operated, shut-off 1.12.1198

1.12 Single seat valves

Alfa Laval's Single Seat Valve is an extremely reliable and hygienic design for stopping or diverting flow in single or multi-directional systems.

Unique SSV, aseptic manually operated, shut-off (US version) 1.12.1202
Unique SSV, aseptic manually operated, change-over 1.12.1206
Unique SSV, aseptic manually operated, change-over (US version) 1.12.1210
Unique SSV, aseptic manually operated, tank outlet 1.12.1214
Unique SSV, aseptic manually operated, tank outlet (US version) 1.12.1216

Unique SSV, Flo-diversion
Unique SSV, Flo-diversion valve 1.12.1218
Unique SSV, Flo-diversion valve, reverse acting 1.12.1220
Unique SSV, Flo-diversion valve, standard, maintainable actuator 1.12.1222
Unique SSV, Flo-diversion valve, standard, ThinkTop 1.12.1224

Actuators for Unique SSV
Maintainable actuator for SSV valves 1.12.1226
Maintainable actuator for SSV valves (US version) 1.12.1228
Maintainable actuator for Unique SSV, two step 1.12.1230
Maintainable actuator for Unique SSV, two step (US version) 1.12.1234
Maintainable actuator (low pressure) for Unique SSV 1.12.1238
Maintainable/non maintainable actuator (high pressure) for Unique SSV . . 1.12.1240
Maintainable actuator (high pressure) for Unique SSV 1.12.1242

Unique SSSV
Unique SSSV, shut-off 1.12.1244
Unique SSSV, change-over 1.12.1246
Unique SSSV, manual, shut-off 1.12.1248
Unique SSSV, manual, change-over 1.12.1250
Unique SSSV, adapter for ThinkTop 1.12.1252

i-SSV
i-SSV, shut-off, 25 mm/DN25 . . . . . 1.12.1254
i-SSV, shut-off, 38-101.6 mm/DN40-100 . . . . . 1.12.1258
i-SSV, change-over, 25 mm/DN25 . . . . . 1.12.1262
i-SSV, change-over, 38-101.6 mm/DN40-100 . . . . . 1.12.1266

LKAP-V and LKAP-T
LKAP-V and LKAP-T air-operated valves with welding ends 1.12.1270

SB mini flow valve
SB mini flow valve, pneumatic angle valve 1.12.1272
SB mini flow valve, pneumatic change-over valve 1.12.1274
SB mini flow valve, manual valve 1.12.1276

1.12 Single seat valves

Alfa Laval's Single Seat Valve is an extremely reliable and hygienic design for stopping or diverting flow in single or multi-directional systems.

Service tools

Mounting tool for plug - single seat valves 1.12.1278
Service tool for dismantling maintainable actuators (single seat valves) . . . 1.12.1279

Service tools for obsolete products

SRC, tool for valve, SRC/ARC/SRC-LS 1.12.1282

Spare parts for obsolete products

SRC, shut-off, 25 mm/DN25 . . . . . 1.12.1284
SRC, shut-off, 38-101.6 mm/DN40-100 . . . . . 1.12.1288
SRC, change-over, 25 mm/DN25 . . . . . 1.12.1292
SRC, change-over, 38-101.6 mm/DN40-100 . . . . . 1.12.1296
SRC, damper for valve 1.12.1300
SRC-LS, shut-off 1.12.1302
SRC-LS, change-over 1.12.1306
SRC, three position and two step 1.12.1310
SRC-RC, shut-off 1.12.1312
SRC-RC, change-over 1.12.1316
SMO-RF fine-adjustment regulating valve 1.12.1320
SMO, sanitary manual valve, shut-off 1.12.1322
SMO, sanitary manual valve, change-over 1.12.1326
ARC, aseptic remote controlled valve, shut-off 1.12.1330
ARC, aseptic remote controlled valve, change-over 1.12.1334
ARC-SB, aseptic remote-controlled valve with steel bellows, shut-off . . . 1.12.1338
ARC-SB, aseptic remote-controlled valve w. steel bellows, change-over . 1.12.1342
LKAB tank outlet valve 1.12.1346
161 & 161OY valves, shut-off 1.12.1348
161 & 161OY valves, change-over 1.12.1350
161& 161OY-90 body shut-off valve 1.12.1352
161 & 171 actuators shut-off & change-over series 1.12.1354
241 series valve, shut-off 1.12.1356
241 series actuator, shut-off and change-over - type 10 and 20 . . . . . 1.12.1358
241 series, change-over parts 1.12.1360
262 Tank outlet valves (tee type) 1.12.1362
262 Kettle valves 1.12.1364
Tank ferrules for 262-21, 22, 29, 31, 33, 35, 57, 58 . . . . . 1.12.1366
262 series actuator: 25-262-210-S/25-262-220-S 1.12.1368
262-121 flow-diversion valve 1.12.1370
262-121 flow-diversion valve, actuator 1.12.1372
Micro-switch assembly for 25-262-121 actuator 1.12.1374

1.12 Single seat valves

Alfa Laval's Single Seat Valve is an extremely reliable and hygienic design for stopping or diverting flow in single or multi-directional systems.

361/361TR valve, shut-off 1.12.1376
361/361TR valve, change-over 1.12.1378
361 27 & 47 reverse acting valves 1.12.1380
Type 13 & 23 actuators 1.12.1382
Type 15 actuator for 371 valves 1.12.1384
Type 10 & 20 actuators 1.12.1386
Type 10L and 20L actuators for 361 - 1" valve 1.12.1388
Type 14 N/O actuator "piston style" actuators with positioner 1.12.1390
Type 24 N/C "piston style" actuators with positioner 1.12.1392
Diaphragm actuator w/Moore positioner 1.12.1394
655 air actuated change-over valves 1.12.1396
650 manual valves, shut-off 1.12.1398
650 manual relief valves 1.12.1400
650 and 655 valve actuators 1.12.1402
650 air actuated valves, shut-off 1.12.1404
D60TRMP - rubber stem compression valve 1.12.1406
D60TMP - metal stem compression valve 1.12.1408
D60YRMP Y body compression valve 1.12.1410

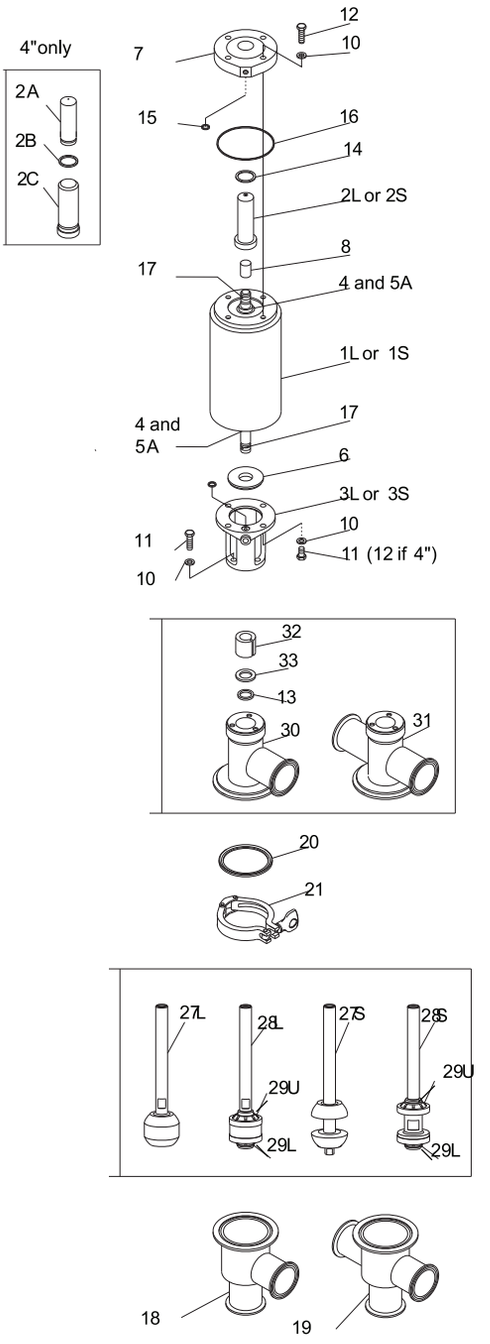
4"only
2A
2B
2C
7
12
10
15
16
14
2L or 2S
8
17
4 and 5A
1L or 1S
4 and 5A
17
6
3L or 3S
10
11
11 (12 if 4")
10
32
33
13
30
31
20
21
27L
28L
29U
29L
27S
28S
29U
29L
18
19

Pos		Qty	Denomination	1 1/2”	2”	2 1/2”	3”	4”
1L		1	Actuator, 10/20, long	751681	751681	751681	751681	751391
		1	Actuator, 30, long	751823	751823	751823	751823	751719
1M		1	Mid position actuator/short	750792	750792	750792	750792	N/A
1S		1	actuator, short, 10/20, short	750318	750318	750318	750318	750496
		1	Actuator, 30, short	750043	750043	750043	750043	751987
1HPS		1	HP actuator,short			751994	751994	
1HPL		1	HP actuator,long			750496	750496	
2S		1	Stem protector, Short	750583	750583	750583	750583	750583
2A		1	Stem protector, long	N/A	N/A	N/A	N/A	751035
2B		1	Stem protector o ring	N/A	N/A	N/A	N/A	750330
2C		1	Stem protector, spacer	N/A	N/A	N/A	N/A	751019
2L		1	Stem protector, long	750577	750577	750577	750577	N/A
2S		1	Stem protector, Short	750583	750583	750583	750583	750577
3L		1	Yoke, long	751684	751684	751684	751684	751901
3S		1	Yoke, short	750224	750224	750224	750224	751076
4		2	Seal retainer	751680	751680	751680	751680	751680
5	□♦○	2	V-packing	755461	755461	755461	755461	755461
5A		2	O-ring to replace v packing	751232	751232	751232	751232	751232
6	□♦○	1	Packing retainer	751659	751659	751659	751659	751659
7		1	End cap	751682	751682	751682	751682	751010
8		1	Red caplug	750568	750568	750568	750568	750568
9		1	Vent plug (not shown)	181256	181256	181256	181256	181256
10		11	Lockwasher	189962	189962	189962	189962	189962
11		7	Screw	189773	189773	189773	189773	189798
12		4	Screw	189723	189723	189723	189723	189723
13	□♦○	1	O-ring stem, BUNA	755370	755370	755370	755370	755452
	□♦○	1	O-ring stem, EPDM	750132	750132	750132	750132	751956
	□♦○	1	O-ring stem, SFY	750077	750077	750077	750077	751957
14		1	O-ring	755356	755356	755356	755356	755356
15	□♦○	2	O-ring	755388	755388	755388	755388	755388
16		1	O-ring	751747	751747	751747	751747	751747
17	□♦○	1	Nylon lock pin	750338	750338	750338	750338	750338
18		1	Body , Lower 2 ports clamp	770026	770478	770844	770846	770736
		1	Body , Lower 2 ports weld	771004	770824	770784	770833	772221
19		1	Body , Lower 3 ports clamp	770003	770489	770863	770878	770965
		1	Body , Lower 3 ports weld	771059	770464	770815	770814	772672
20	□♦○	1	Body gasket, BUNA	750376	750376	750385	750391	755421
	□♦○	1	Body gasket, EPDM	750383	750383	750390	750400	750686
	□♦○	1	Body gasket, SFY	750382	750382	750389	750398	750738
21		1	Clamp	270266	270266	270267	212211	212209
27L		1	Stem , BUNA, long	770241	770244	770247	770250	771509
		1	Stem, EPDM, long	771442	770962	771335	770967	778310
		1	Stem , SFY, long	771177	771169	770785	770809	778311
27S		1	Stem LP , BUNA, short	9634055829	9634055830	9634055831	9634055832	N/A
		1	Stem LP , EPDM, short	773147	772835	773136	772833	N/A
		1	Stem LP SFY, short	773158	9634050983	773137	773142	N/A
28L		1	Stem, TR long	770259	770263	770265	770267	771506
		1	Stem, TR2 long		9634053890	9634051876	963054117	9634050172
28S		1	Stem, TR Short	770338	770343	770349	770354	N/A
		1	Stem, TR2 short	9634052007	9634054775	9634052001	9634052008	773235
29U	♦	1	Seat, TR Upper	750943	750943	750947	751268	750906
	○	1	Seat, TR2 Upper	752096	9634050833	752100	752102	752104
29L	♦	1	Seat, TR Lower	751525	750943	750947	751268	750906
	○	1	Seat, TR2 Lower	9634050833	9634050833	752100	752102	752104
30		1	Body , upper 2 ports clamp	770491	770494	770510	770528	770724
		1	Body , upper 2 ports weld		770506	778372	771533	
31		1	Body , upper 3 ports clamp	770493	770504	770517	770530	772719
		1	Body , upper 3 ports weld					
32	□♦○	1	Stem bushing	763362	763362	763362	763362	762528
33		1	Seal retaining washer	750361	750361	750361	750361	750360

		1 1/2”	2”	2 1/2”	3”	4”
□	Non TR Service Kit Buna	9613990327	9613990327	9613990508	9613990330	9613990333
□	Non TR Service Kit EPDM	9613990328	9613990328	9613990509	9613990331	9613990334
□	Non TR Service Kit SFY	9613990329	9613990329	9613990510	9613990332	9613990335
♦	TR Service Kit Buna	9613990106	9613990109	9613990112	9613990115	9613990118
♦	TR Service Kit EPDM	9613990107	9613990110	9613990113	9613990116	9613990119
♦	TR Service Kit SFY	9613990108	9613990111	9613990114	9613990117	9613990120
○	TR2 Service Kits Buna	9613990575	9613990578	9613990581	9613990584	9613990587
○	TR2 Service Kits EPDM	9613990576	9613990579	9613990582	9613990585	9613990588
○	TR2 Service Kits SFY	9613990577	9613990580	9613990583	9613990586	9613990589

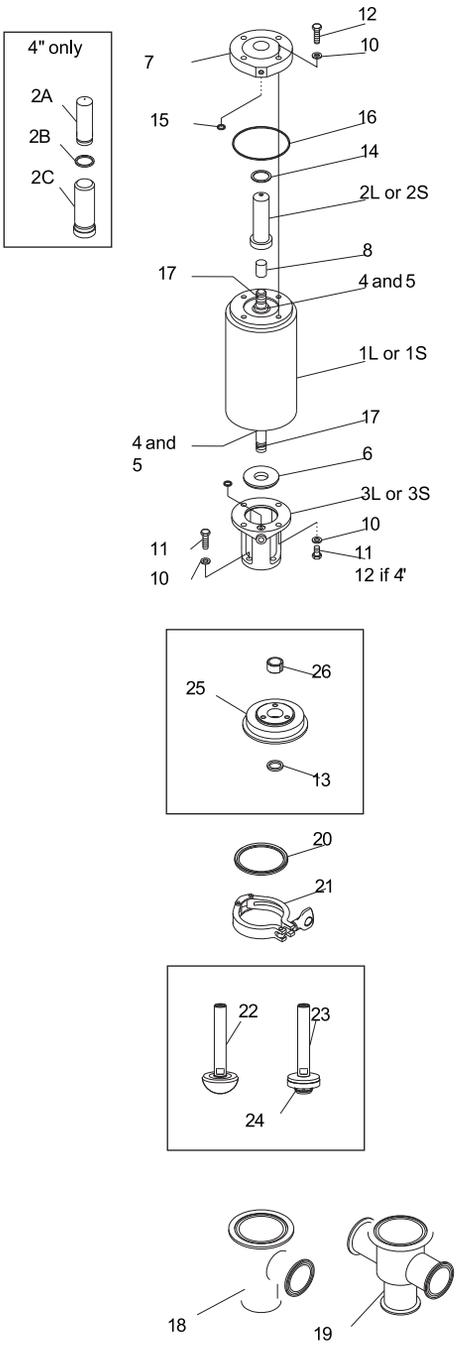
4" only
2A
2B
2C
12
10
7
15
16
14
2L or 2S
8
17
4 and 5
1L or 1S
17
4 and 5
6
3L or 3S
10
11
10
11
12 if 4'
26
25
13
20
21
22
23
24
18
19

Pos		Qty	Denomination	1”	1 1/2”	2”	2 1/2”	3”	4”
1L		1	Actuator, 10/20, long	N/A	751681	751681	751681	751681	751391
		1	Actuator, 30, long	N/A	751823	751823	751823	751823	751719
1		1	1 Mid position actuator, short	N/A	750792	750792	750792	750792	N/A
1S		1	Actuator, 10/20, short	750887	750318	750318	750318	750318	750496
		1	30 Actuator, short, 30, short	751906	750043	750043	750043	750043	751987
1HPS		1	HP actuator, short				751994	751994	
1HPL		1	HP actuator, long				750496	750496	
2S		1	Stem protector, Short	750583	750583	750583	750583	750583	750583
2A		1	Stem protector, long	N/A	N/A	N/A	N/A	N/A	751035
2B		1	Stem protector O-ring	N/A	N/A	N/A	N/A	N/A	750330
2C		1	Stem protector, spacer	N/A	N/A	N/A	N/A	N/A	751019
2L		1	Stem protector, long	N/A	750577	750577	750577	750577	N/A
2S		1	Stem protector, Short	750583	750583	750583	750583	750583	750577
3L		1	Yoke, long	N/A	751684	751684	751684	751684	751901
3S		1	Yoke, short	750224	750224	750224	750224	750224	751076
4		2	Seal retainer	751680	751680	751680	751680	751680	751680
5	□♦○	2	V-packing	755461	755461	755461	755461	755461	755461
5A		2	O-ring to replace V-packing	751232	751232	751232	751232	751232	751232
6	□♦○	1	Packing retainer	751659	751659	751659	751659	751659	751659
7		1	End cap	751682	751682	751682	751682	751682	751010
8		1	Red caplug	750568	750568	750568	750568	750568	750568
9		1	Vent plug (not shown)	181256	181256	181256	181256	181256	181256
10		11	Lockwasher	189962	189962	189962	189962	189962	189962
11		7	Screw	189773	189773	189773	189773	189773	189798
12		4	Screw	189723	189723	189723	189723	189723	189723
13	□♦○	1	O-ring stem, BUNA	755357	755370	755370	755370	755370	755452
	□♦○	1	O-ring stem, EPDM	750037	750132	750132	750132	750132	751956
	□♦○	1	O-ring stem, SFY	750173	750077	750077	750077	750077	751957
14		1	O-ring	755356	755356	755356	755356	755356	755356
15	□♦○	2	O-ring	755388	755388	755388	755388	755388	755388
16		1	O-ring	751747	751747	751747	751747	751747	751747
17	□♦○	1	Nylon lock pin	750292	750338	750338	750338	750338	750338
18		1	Body lower 2 ports , clamp	771196	770026	770478	770844	770846	770736
		1	Body lower 2 ports , weld		771985	770436	778371	771532	
19		1	Body lower 3 ports , clamp		770003	770489	770863	770878	773277
		1	Body lower 3 ports , weld			770479	771710	771649	9634047871
20	□♦○	1	Body gasket , BUNA	290285	750376	750376	750385	750391	755421
	□♦○	1	Body gasket , EPDM	290105	750383	750383	750390	750400	750686
	□♦○	1	Body gasket , SFY	290023	750382	750382	750389	750398	750738
21		1	Clamp	212196	270266	270266	270267	212211	212209
22		1	Valve plug , BUNA	771230					
		1	Valve plug , EPDM	771470					
		1	Valve plug , SFY	770160					
		1	Valve plug, LP, BUNA (U)	N/A	9634055824	9634055825	9634055826	9634055827	9634055828
		1	Valve plug , LP, EPDM (ESF)	N/A	773198	773116	773199	773014	773201
		1	Valve plug , LP, SFY	N/A	773197	773063	773200	773058	773202
23		1	TR stem/seat assembly	770344	770216	770223	770230	770234	771501
		1	TR2 valve plug	9634052120	773076	9634054774	773080	773086	773239
24	♦	1	Seat, TR snap-on	751524	751525	750943	750947	751268	750906
	○	1	Seat, TR2 stem	752094	752096	9634050833	752100	752102	752104
25		1	Bonnet	750186	750514	750514	751686	751687	751899
26	□♦○	1	Stem bushing	760277	763361	763361	763361	763361	762507

		1”	1 1/2”	2”	2 1/2”	3”	4”
□	Non TR Service Kit Buna	9613990336	9613990339	9613990342	9613990345	9613990348	9613990351
□	Non TR Service Kit EPDM	9613990337	9613990340	9613990343	9613990346	9613990349	9613990352
□	Non TR Service Kit SFY	9613990338	9613990328	9613990344	9613990347	9613990350	9613990353
♦	TR Service Kit Buna	9613990088	9613990091	9613990094	9613990097	9613990100	9613990103
♦	TR Service Kit EPDM	9613990089	9613990092	9613990095	9613990098	9613990101	9613990104
♦	TR Service Kit SFY	9613990090	9613990093	9613990096	9613990099	9613990102	9613990105
○	TR2 Service Kit Buna	9613990557	9613990560	9613990563	9613990566	9613990569	9613990572
○	TR2 Service Kit EPDM	9613990558	9613990561	9613990564	9613990567	9613990570	9613990573
○	TR2 Service Kit SFY	9613990559	9613990562	9613990565	9613990568	9613990571	9613990574

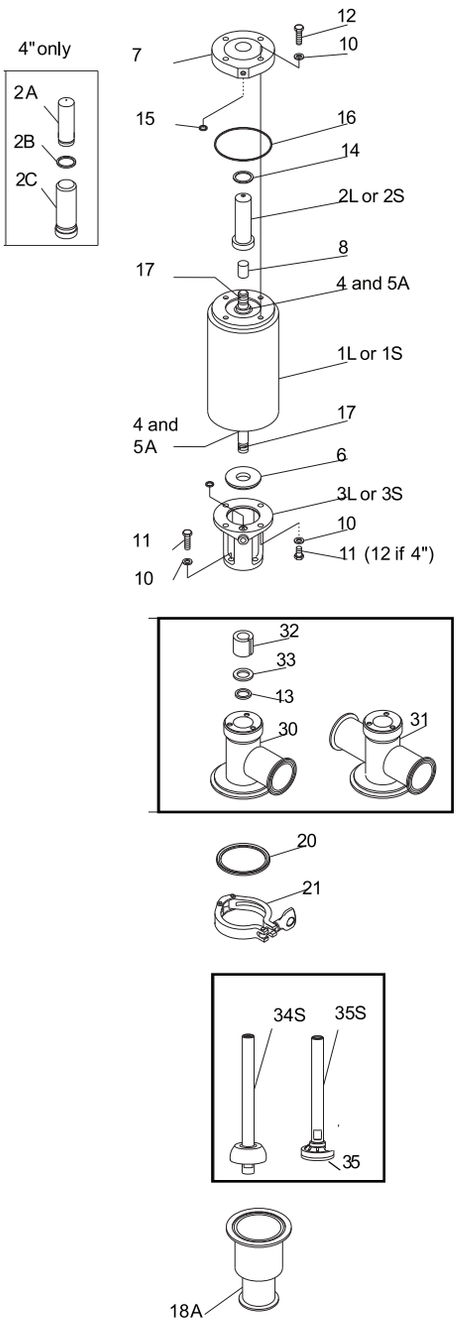
4" only
2A
2B
2C
7
12
10
15
16
14
2L or 2S
8
17
4 and 5A
1L or 1S
4 and 5A
17
6
3L or 3S
10
11
11 (12 if 4")
10
32
33
13
30
31
20
21
34S
35S
35
18A

Pos		Qty	Denomination	1 1/2”	2”	2 1/2”	3”	4”
1L		1	10/20 actuator, long	751681	751681	751681	751681	751391
1S		1	10/20 actuator, short	750318	750318	750318	750318	750496
2S		1	Stem protector, short	750583	750583	750583	750583	750583
2A		1	Stem protector, long	N/A	N/A	N/A	N/A	751035
2B		1	Stem protector o ring	N/A	N/A	N/A	N/A	750330
2C		1	Stem protector, spacer	N/A	N/A	N/A	N/A	751019
2L		1	Stem protector, long	750577	750577	750577	750577	N/A
2S		1	Stem protector, short	750583	750583	750583	750583	750577
3L		1	Yoke, long	751684	751684	751684	751684	751901
3S		1	Yoke, short	750224	750224	750224	750224	751076
4		2	Seal retainer	751680	751680	751680	751680	751680
5		2	V-packing	755461	755461	755461	755461	755461
5A		2	O-ring to replace v packing	751232	751232	751232	751232	751232
6	□♦○	1	Packing retainer	751659	751659	751659	751659	751659
7		1	End cap	751682	751682	751682	751682	751010
8		1	Red caplug	750568	750568	750568	750568	750568
9		1	Vent plug (not shown)	181256	181256	181256	181256	181256
10		11	Lockwasher	189962	189962	189962	189962	189962
11		7	Screw	189773	189773	189773	189773	189798
12		1	Screw	189723	189723	189723	189723	189723
13	□♦○	1	O-ring stem BUNA	755370	755370	755370	755370	755452
	□♦○	1	O-ring stem EPDM	750132	750132	750132	750132	751956
	□♦○	1	O-ring stem SFY	750077	750077	750077	750077	751957
14		1	O-ring	755356	755356	755356	755356	755356
15	□♦○	2	O-ring	755388	755388	755388	755388	755388
16		1	O-ring	751747	751747	751747	751747	751747
17	□♦○	1	Nylon lock pin	750338	750338	750338	750338	750338
18A		1	Body lower	770428	770056	771110	771013	N/A
20	□♦○	1	Body gasket BUNA	750376	750376	750385	750391	755421
	□♦○	1	Body gasket EPDM	750383	750383	750390	750400	750686
	□♦○	1	Body gasket SFY	750382	750382	750389	750398	750738
21		1	Clamp	270266	270266	270267	212211	212209
30		1	Body upper 2 ports clamp	770119	770120	770121	770122	N/A
32	□♦○	1	Stem bushing	763362	763362	763362	763362	762528
33		1	Seal retaining washer	750361	750361	750361	750361	750361
34S		1	Stem, LP, BUNA, short (27 & 47)	9634055836	9634055836	9634055837	9634055838	
		1	Stem, LP, EPDM, short (27 & 47)	773205	773205	773203	773207	N/A
		1	Stem, LP, SFY, short (27 & 47)	773206	773206	773204	773208	N/A
35L		1	TR stem, long (27 & 47)	N/A	N/A	N/A	N/A	
35S		1	TR stem,short (27 & 47)	770430	770430	771027	771051	N/A
		1	TR2 stem, short (27 & 47)			9634057923		
35	♦	1	TR stem seat	751525	750943	750947	751268	
	○	1	TR2 stem seat	752096	9634050833	752100	752102	752104

		1 1/2”	2”	2 1/2”	3”	4”
□	Non TR Service Kit Buna	9613990327	9613990327	9613990508	9613990330	9613990333
□	Non TR Service Kit EPDM	9613990328	9613990328	9613990509	9613990331	9613990334
□	Non TR Service Kit SFY	9613990329	9613990329	9613990510	9613990332	9613990335
♦	TR Service Kit Buna	9613990106	9613990109	9613990112	9613990115	9613990118
♦	TR Service Kit EPDM	9613990107	9613990110	9613990113	9613990116	9613990119
♦	TR Service Kit SFY	9613990108	9613990111	9613990114	9613990117	9613990120
○	TR2 Service Kit Buna	9613990575	9613990578	9613990581	9613990584	9613990587
○	TR2 Service Kit EPDM	9613990576	9613990579	9613990582	9613990585	9613990588
○	TR2 Service Kit SFY	9613990577	9613990580	9613990583	9613990586	9613990589

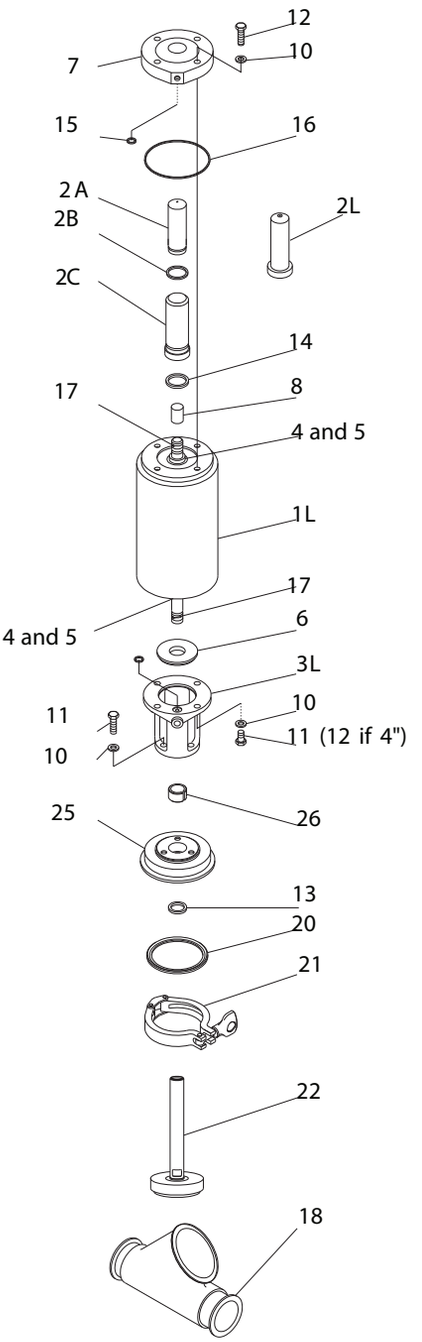
12
10
7
15
16
2 A
2B
2L
2C
14
17
8
4 and 5
1L
17
4 and 5
6
3L
10
11
11 (12 if 4")
10
25
26
13
20
21
22
18

Pos		Qty	Denomination	1 1/2”	2”	2 1/2”	3”	4”
1L		1	Actuator n/c	750651	750384	751391	751391	751391
		1	Air to air	751679	759635	751719	751719	751719
2A		1	Stem protector	N/A	751035	751035	751035	751035
2B		1	O-ring	N/A	750330	750330	750330	750330
2C		1	Spacer	N/A	751019	751019	751019	751019
2L		1	Stem protector, long	750577	N/A	N/A	N/A	N/A
3L		1	Yoke	751684	751487	751487	751901	751901
4		2	Seal retainer	751680	751680	751680	751680	751680
5	□	2	V-packing	755461	755461	755461	755461	755461
6	□	1	Packing retainer	751659	751659	751659	751659	751659
7		1	End cap	751682	751010	751010	751010	751010
8		1	Red caplug	750568	750568	750568	750568	750568
9		1	Vent plug (not shown)	181256	181256	181256	181256	181256
10		11	Lockwasher	189962	189962	189962	189962	189962
11		3	Screw	189773	189773	189773	189773	189798
12		8	Screw	189723	189723	189723	189723	189723
13	□	1	O-ring BUNA	755370	755370	755370	755370	755452
	□	1	O-ring EPDM	750132	750132	750132	750132	750956
	□	1	O-ring SFY	750077	750077	750077	750077	750957
14		1	O-ring	755356	755356	755356	755356	755356
15	□	2	O-ring	755388	755388	755388	755388	755388
16		1	O-ring	755472	755472	755472	755472	755472
17	□	1	Nylon pin	750338	750338	750338	750338	750338
18		1	Valve body 2 ports clamp	622268	623368	620754	625854	620235
20	□	1	Body gasket BUNA	298454	298455	298456	298360	299320
	□	1	Body gasket EPDM	290048	290036	290018	290037	290315
	□	1	Body gasket SFY	290040	290049	290053	290093	290225
21		1	Clamp	212206	212207	755345	755114	270085
22		1	Stem BUNA	770016	771148	771202	771140	778313
		1	Stem EPDM	771449	771452	771757	771765	
		1	Stem SFY		770670	771280	771167	
		1	Stem TR		9634048527	772744	772747	772788
		1	Seat TR		751995	750903	751967	318872
25		1	Bonnet	750106	751459	751573	751442	759638
26	□	1	Stem bushing	763361	763361	763361	760791	762507

Parts marked with □ are included in the service kits.

Recommended spare parts: Service kits.

		1 1/2”	2”	2 1/2”	3”	4”
□	Service Kit BUNA		9613990357	9613990360	9613990363	9613990366
□	Service Kit EPDM	9613990355	9613990358	9613990361	9613990364	9613990367
□	Service Kit SFY	9613990356	9613990359	9613990362	9613990365	9613990368

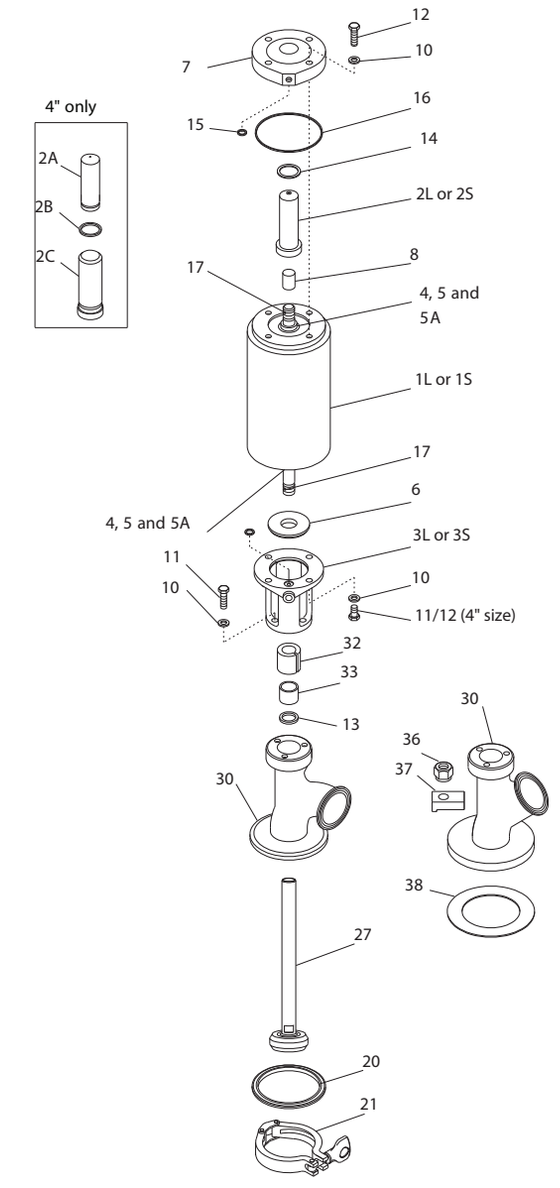
12
10
7
16
15
14
4" only
2A
2B
2C
2L or 2S
8
17
4, 5 and
5A
1L or 1S
17
6
4, 5 and 5A
3L or 3S
11
10
10
11/12 (4" size)
32
33
13
30
36
37
30
38
27
20
21
4 hole flange for 2½ " and 3" valves
2 hole flange for 2" valves

Pos		Qty	Denomination	2”	2 1/2”	3”	4”
1L		1	Actuator long	751681	751681	751681	751681
2L		1	Stem protector long	750577	750577	750577	750577
2A		1	Stem protector long 4"				751035
2B		1	Stem protector o-ring 4"				750330
2C		1	Stem protector spacer 4"				751019
3L		1	Yoke long	751684	751684	751684	751684
4		2	Retainer	751680	751680	751680	751680
5	□♦○	2	V-packing	755461	755461	755461	755461
5A		2	O-ring to replace v-packing	751232	751232	751232	751232
6	□♦○	1	Packing retainer	751659	751659	751659	751659
7		1	End cap	751682	751682	751682	751682
8		1	Red capplug	750568	750568	750568	750568
9		1	Vent plug (not shown)	181256	181256	181256	181256
10		11	Lockwasher	189962	189962	189962	189962
11		7	Screw	189773	189773	189773	189773
12		4	Screw	189723	189723	189723	189723
13	□♦○	1	O-ring stem BUNA	755370	755370	755370	755452
	□♦○	1	O-ring stem EPDM	750132	750132	750132	750956
	□♦○	1	O-ring stem SFY	750077	750077	750077	750957
14		1	O-ring	755356	755356	755356	755356
15	□♦○	2	O-ring	755388	755388	755388	755388
16		1	O-ring	755472	755472	755472	755472
17	□♦○	2	Nylon lock pin	750338	750338	750338	750338
20	□♦○	1	Body gasket BUNA 31 & 35	755418	755418	755421	755421
	□♦○	1	Body gasket EPDM 31 & 35	750811	750811	750686	750686
	□♦○	1	Body gasket SFY 31 & 35	750609	750609	750738	750738
21		1	Clamp 31 & 35	212208	212208	212209	212209
24	♦	1	TR snap on seat	750943	750947	751268	750906
	○	1	TR2 snap on seat	9634050833	752100	752102	752104
27		1	Valve plug Buna	770435	771142	771056	771199
		1	Valve plug EPDM	771907	772872	771825	772565
		1	Valve plug SFY	770891	770211	770382	318685
		1	TR valve plug	772981	773222	772789	772866
		1	TR2 valve plug		9634057759	9634057756	9634057766
30		1	Valve body 29	771145	771141	770427	770335
		1	Valve body 31	773525	773526	773527	773532
		1	Valve body 33	770296	770302	770303	770319
		1	Valve body 35		771003	771276	770944
32	□♦○	1	Split bushing	763362	763362	763362	763507
33		1	Retainer	9634053630	9634053630	9634053630	769928
36		4	Nut for 29 & 33	754288	754288	754288	754288
37		4	Clip for 29 & 33	755057	755057	755057	755057
38	□♦○	1	Gasket BUNA 29 & 33	755423	755423	755423	755423
	□♦○	1	Gasket EPDM 29 & 33	750949	750949	750949	9634051854
	□♦○	1	Gasket SFY 29 & 33	750123	750123	750123	750443
39		1	Tank ferrule 29 & 33 (not shown)	760766	760766	760766	760837
		1	Tank ferrule 31 & 35 (not shown)	760928	760928	760345	760345

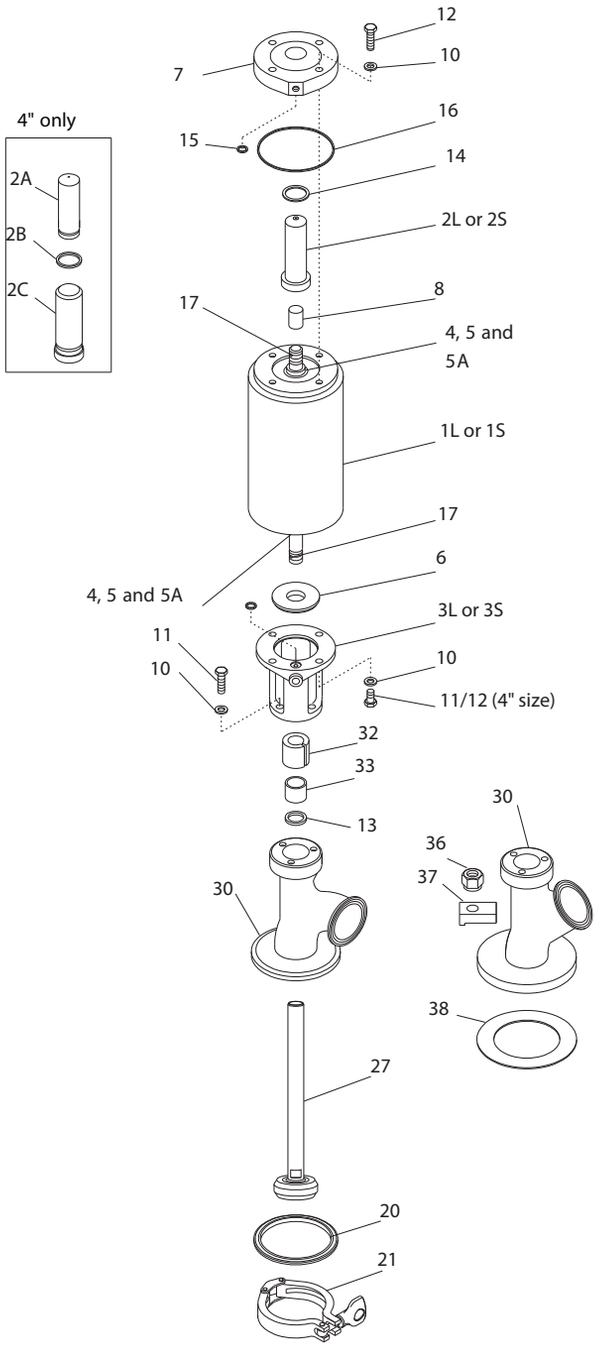

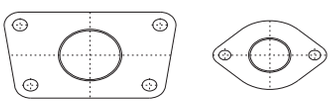

4 hole flange for 2½ " and 3" valves 2 hole flange for 2" valves

		2”	2 1/2”	3”	4”
Service Kits 29, 33					
□	Non TR Service Kit Buna		9613990309	9613990309	9613990309
□	Non TR Service Kit EPDM	9613990310	9613990310	9613990310	9613990313
□	Non TR Service Kit SFY	9613990311	9613990311	9613990311	9613990314
Service Kits 31, 35					
□	Non TR Service Kit Buna	9613990381	9613990381	9613990384	9613990387
□	Non TR Service Kit EPDM	9613990382	9613990382	9613990385	9613990388
□	Non TR Service Kit SFY	9613990383	9613990383	9613990386	9613990389
Service Kits 29, 33					
◆	TR Service Kit Buna		9613990300	9613990303	9613990306
◆	TR Service Kit EPDM	9613990298	9613990301	9613990304	9613990307
◆	TR Service Kit SFY	9613990299	9613990302	9613990305	9613990308
Service kits 31, 35					
◆	TR Service Kit Buna	9613990485		9613990491	9613990494
◆	TR Service Kit EPDM	9613990486	9613990489	9613990492	9613990495
◆	TR Service Kit SFY	9613990487	9613990490	9613990493	9613990496
Service kits 29, 33					
○	TR2 Service Kit Buna			9613990527	9613990530
○	TR2 Service Kit EPDM	9613990522	9613990525	9613990528	9613990531
○	TR2 Service Kit SFY	9613990523	9613990526	9613990529	9613990532
Service kits 31, 35					
○	TR2 Service Kit Buna		9613990536	9613990539	9613990542
○	TR2 Service Kit EPDM	9613990534	9613990537	9613990540	9613990543
	TR2 Service Kit SFY	9613990535	9613990538	9613990541	9613990544

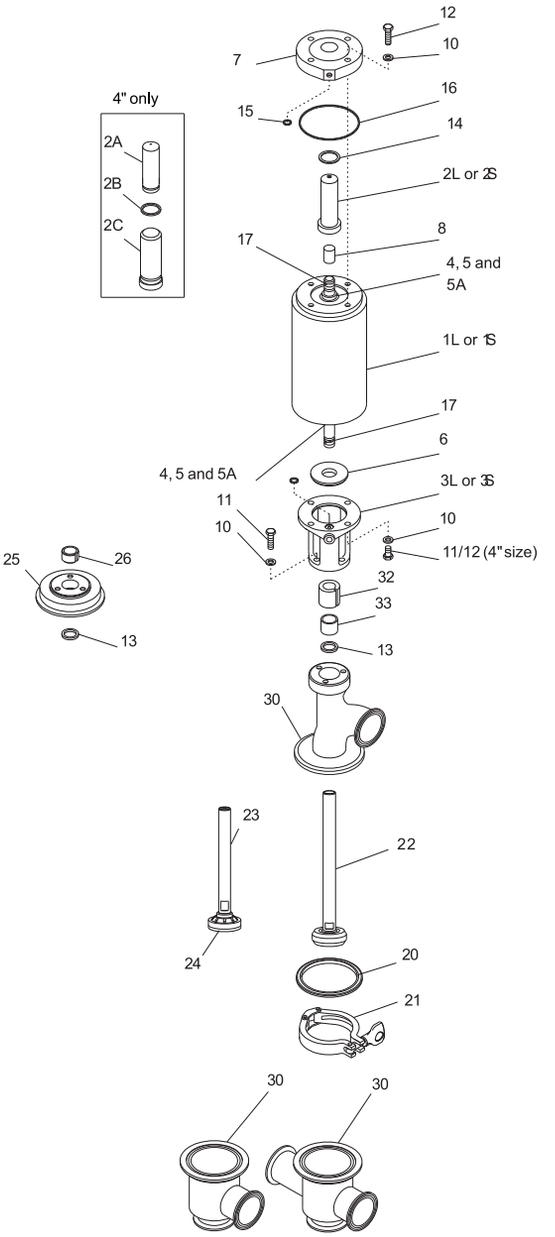
12
10
7
4" only
16
15
14
2A
2B
2C
2L or 2S
8
17
4, 5 and
5A
1L or 1S
17
6
4, 5 and 5A
3L or 3S
11
10
10
11/12 (4" size)
25
26
32
33
13
13
30
23
22
24
20
21
30
30

Pos		Qty	Denomination	2”	2 1/2”	3”	4”
1L		1	Actuator long 21,22,57,58	751681	751681	751681	751681
		1	Actuator long 13 & 123				751391
1S		1	Actuator short	750318	750318	750318	
2L		1	Stem protector long	751681	751681	751681	751681
2A		1	Stem protector long 4"				751035
2B		1	Stem protector o-ring 4"				750330
2C		1	Stem protector spacer 4"				751019
3L		1	Yoke long	751684	751684	751684	751684
4		2	Retainer	751680	751680	751680	751680
5	□♦○	2	V-packing	755461	755461	755461	755461
5A	□♦○	2	O-ring to replace V-packing	751232	751232	751232	751232
6	□♦○	1	Packing retainer	751659	751659	751659	751659
7		1	End cap	751682	751682	751682	751682
8		1	Red capplug	750568	750568	750568	750568
9		1	Vent plug (not shown)	181256	181256	181256	181256
10		11	Lockwasher	189962	189962	189962	189962
11		7	Screw	189773	189773	189773	189773
12		4	Screw	189723	189723	189723	189723
13	□♦○	1	O-ring stem BUNA	755370	755370	755370	755452
	□♦○	1	O-ring stem EPDM	750132	750132	750132	751956
	□♦○	1	O-ring stem EPDM	750132	750132	750132	751956
	□♦○	1	O-ring stem SFY	750077	750077	750077	751957
14		1	O-ring	755356	755356	755356	755356
15	□♦○	2	O-ring	755388	755388	755388	755388
16		1	O-ring	755472	755472	755472	755472
17	□♦○	2	Nylon lock pin	750338	750338	750338	750338
20	□♦○	1	Body gasket BUNA 13 & 123	750376	750385	750391	755421
	□♦○	1	Body gasket EPDM 13 & 123	750383	750390	750400	750686
	□♦○	1	Body gasket SFY 13 &123	750382	750389	750398	750738
	□♦○	1	Body gasket BUNA 21, 22, 57 & 58	755418	755418	755421	755421
		1	Body gasket EPDM 21, 22, 57 & 58	750811	750811	750686	750686
		1	Body gasket SFY 21, 22, 57 & 58	750609	750609	750738	750738
21		1	Clamp 13 & 123	270266	270267	212211	212209
		1	Clamp 21,22,57,58	212208	212208	212209	212209
22		1	Valve plug BUNA 21,22,57,58	770435	771142	771056	771199
		1	Valve plug EPDM 21,22,57,58	771907	772872	771825	772565
		1	Valve plug SFY 21,22,57,58	770891	770211	770382	318685
23		1	TR valve plug 13 & 123	770223	770230	770234	771501
		1	TR2 valve plug 21, 22, 57, 58		9634057759	9634057756	9634057766
		1	TR2 valve plug 13 & 123	9634054774	773080	773086	773239
24	♦	1	TR snap on seat	750943	750947	751268	750906
	○	1	TR2 stem seat	9634050833	752100	752102	752104
25		1	Bonnet 13 & 123	750514	751686	751687	751899
26	□♦○	1	Split bushing 13 & 123	763361	763361	763361	762507
30		1	Valve body 13	771285		770650	
		1	Valve body 21	773525	773526	773527	770532
		1	Valve body 22	771676	771677	771678	
		1	Valve body 57	770415	770723	770928	778316
		1	Valve body 58	770418	772413	770417	770440
		1	Valve body 123	771000	770368	770021	9634053363
32	□♦○	1	Split bushing 21,22,57,58	763362	763362	763362	762507
33		1	Retainer 21,22,57,58	9634053630	9634053630	9634053630	769928
39		1	Tank ferrule 21 (not shown)	761580	761580	760938	760938
		1	Tank ferrule 22,57,58 (not shown)	762284	762284	760948	760948

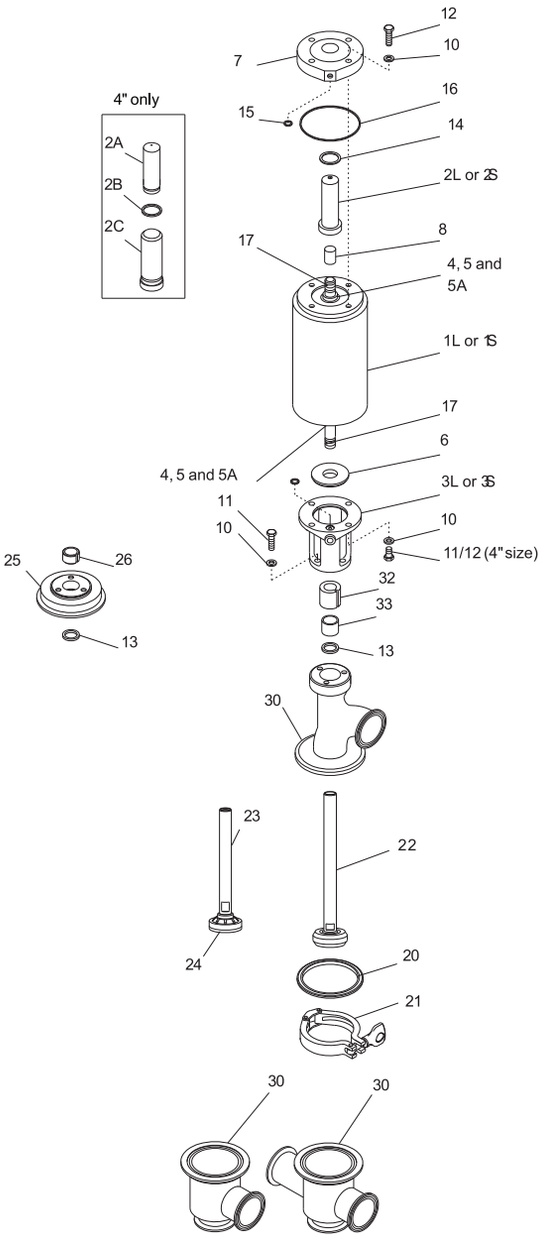
12
10
7
16
15
14
4" only
2A
2B
2C
2L or 2S
8
17
4, 5 and
5A
1L or 1S
17
6
4, 5 and 5A
3L or 3S
11
10
10
11/12 (4" size)
25
26
32
33
13
13
30
23
22
24
20
21
30
30

	2”	2 1/2”	3”	4”
Service kits 21, 22, 57, 58				
□ Non TR Service Kits Buna	9613990381	9613990381	9613990384	9613990387
□ Non TR Service Kits EPDM	9613990382	9613990382	9613990385	9613990388
□ Non TR Service Kits SFY	9613990383	9613990383	9613990386	9613990389
Service kits 13, 123				
□ TR Service Kit Buna	9613990369	9613990372	9613990375	9613990378
□ TR Service Kit EPDM	9613990370	9613990373	9613990376	9613990379
□ TR Service Kit SFY	9613990371	9613990374	9613990377	9613990380
Service kits 21, 22, 57, 58				
◆ TR Service Kit Buna	9613990485		9613990491	9613990494
◆ TR Service Kit EPDM	9613990486	9613990489	9613990492	9613990495
◆ TR Service Kit SFY	9613990487	9613990490	9613990493	9613990496
Service kits 13,123				
◆ TR Service Kit Buna	9613990315	9613990318	9613990321	
◆ TR Service Kit EPDM	9613990316	9613990319	9613990322	9613990325
◆ TR Service Kit SFY	9613990317	9613990320	9613990323	9613990326
Service kits 21, 22, 57, 58				
○ TR2 Service Kit Buna		9613990536	9613990539	9613990542
○ TR2 Service Kit EPDM	9613990534	9613990537	9613990540	9613990543
○ TR2 Service Kit SFY	9613990535	9613990538	9613990541	9613990544
Service kits 13, 123				
○ TR2 Service Kit Buna	9613990545	9613990548	9613990551	9613990554
○ TR2 Service Kit EPDM	9613990546	9613990549	9613990552	9613990555
○ TR2 Service Kit SFY	9613990547	9613990550	9613990553	9613990556

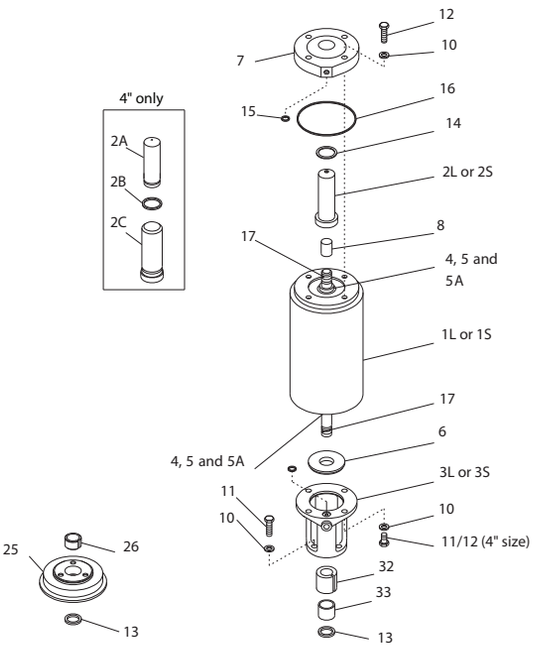

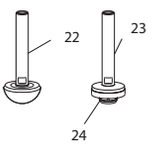

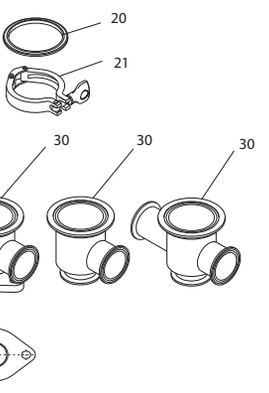

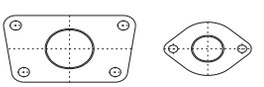

4 hole flange for 2½" and 3" valves

2 hole flange for 2" valves

Pos		Qty	Denomination	2”	2 1/2”	3”	4”
1L		1	Actuator long	751681	751681	751681	751391
1S		1	Actuator short	750318	750318	750318	
2L		1	Stem protector long	751681	751681	751681	751681
2A		1	Stem protector long 4"				751035
2B		1	Stem protector ring 4"				750330
2C		1	Stem protector spacer 4"				751019
3L		1	Yoke long	751684	751684	751684	751684
4		2	Retainer	751680	751680	751680	751680
5	□♦○	2	V-packing	755461	755461	755461	755461
5A		2	O-ring to replace V-packing	751232	751232	751232	751232
6	□♦○	1	Packing retainer	751659	751659	751659	751659
7		1	End cap	751682	751682	751682	751682
8		1	Red capplug	750568	750568	750568	750568
9		1	Vent plug (not shown)	181256	181256	181256	181256
10		11	Lockwasher	189962	189962	189962	189962
11		7	Screw	189773	189773	189773	189773
12		4	Screw	189723	189723	189723	189723
13	□♦○	1	O-ring stem BUNA	755370	755370	755370	755452
	□♦○	1	O-ring stem EPDM	750132	750132	750132	751956
	□♦○	1	O-ring stem SFY	750077	750077	750077	751957
14		1	O-ring	755356	755356	755356	755356
15	□♦○	2	O-ring	755388	755388	755388	755388
16		1	O-ring	755472	755472	755472	755472
17	□♦○	2	Nylon lock pin	750338	750338	750338	750338
20	□♦○	1	Gasket BUNA 13 & 123	750376	750385	750391	755421
	□♦○	1	Gasket EPDM 13 & 123	750383	750382	750389	750686
21		1	Clamp	270266	270267	212211	212209
22		1	LP valve plug BUNA	9634055833	9634055834	9634055835	9634055828
		1	LP valve plug EPDM	773244	773246	9634058768	773201
		1	LP valve plug SFY	773243	773245	773248	773202
23		1	TR valve plug	770433	771269	771185	771501
		1	TR2 valve plug	9634053090	9634053091	9634053092	773239
24	♦	1	TR stem seat	750943	750947	751268	750906
	○	1	TR2 stem seat	9634050833	752100	752102	752104
25		1	Bonnet	750514	751686	751687	751899
26	□♦○	1	Bushing	763361	763361	763361	762507
30		1	Valve body-47	771026	771032	771024	771366
		1	Valve body-48	770981	770985	770973	771370
		1	Valve body-49	771497	771499	771500	N/A
		1	Valve body-50	771494	771495	771496	N/A
		1	Valve body-51	770770	771223	770385	771380
		1	Valve body-52	772399	772400	772401	772868

		2”	2 1/2”	3”	4”
□	Non TR Service Kit Buna	9613990369	9613990372	9613990375	9613990378
□	Non TR Service Kit EPDM	9613990370	9613990373	9613990376	9613990379
□	Non TR Service Kit SFY	9613990371	9613990374	9613990377	9613990380
♦	TR Service Kit Buna	9613990315	9613990318	9613990321	
♦	TR Service Kit EPDM	9613990316	9613990319	9613990322	9613990325
♦	TR Service Kit SFY	9613990317	9613990320	9613990323	9613990326
○	TR2 Service Kit Buna			9613990527	9613990530
○	TR2 Service Kit EPDM	9613990522		9613990528	9613990531
○	TR2 Service Kit SFY	9613990523	9613990525	9613990529	9613990532

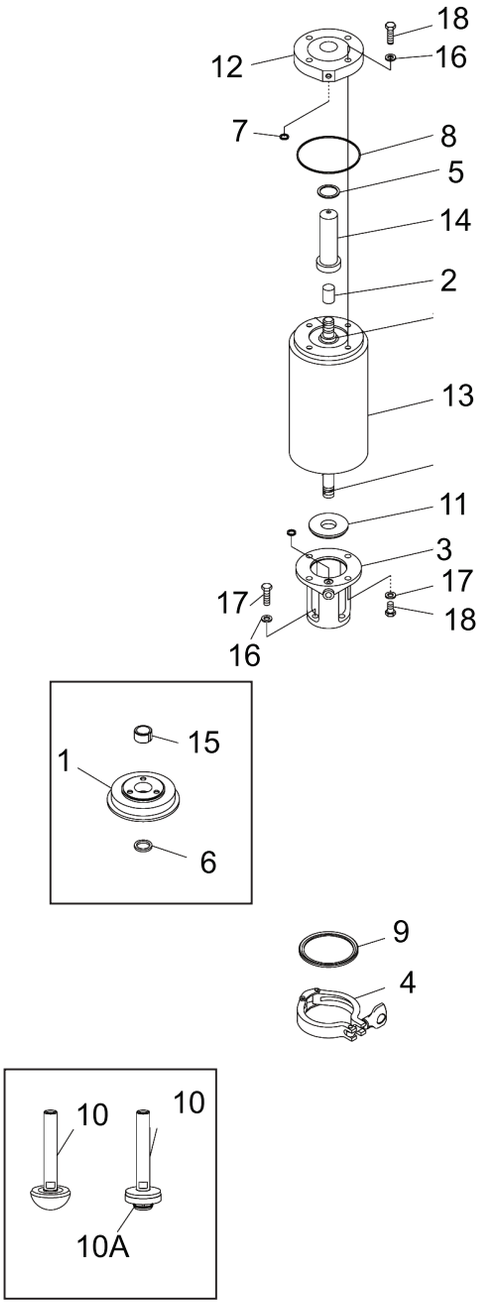
18
12
16
7
8
5
14
2
13
11
3
17
17
18
16
15
1
6
9
4
10
10
10A

Pos		Qty	Denomination	2”	2 1/2”	3”
1		1	ADAPTER BONNET -761 TO 361	9634067604	9634067605	9634067606
2		1	CAPLUG#5/8	750568	750568	750568
3		1	YOKE	750224	750224	750224
4		1	BODY CLAMP	270266	270267	212211
5		1	O-RING USF	755356	755356	755356
6	□	1	STEM O-RING BUNA	755370	755370	755370
	♦	1	STEM O-RING EPDM	750132	750132	750132
	○	1	STEM O-RING SFY	750077	750077	750077
7		2	O-RING USF	755388	755388	755388
8		1	O-RING USF	755472	755472	755472
9	□	1	BODY GASKET BUNA	755417	755419	755420
	♦	1	BODY GASKET EPDM	751799	750812	750322
	○	1	BODY GASKET SFY	750209	750210	750610
10		1	LP STEM-USF	9634055825	9634055826	9634055827
		1	LP STEM-ESF	773116	773199	773014
		1	LP STEM-SFY	9634055825	9634055826	9634055827
		1	LP STEM-ESF	773116	773199	773014
		1	LP STEM-SFY	773063	773200	773058
11		1	PACKING GLAND	751659	751659	751659
12		1	PLASTIC DOME	751682	751682	751682
13		1	ACTUATOR	750318	750318	750318
14		1	STEM PROTECTOR	750583	750583	750583
15	□♦○	1	STEM BUSHING	763361	763361	763361
16		11	LOCKWASHER	189962	189962	189962
17		7	SCREW	189773	189773	189773
18		4	SCREW	189723	189723	189723
19		1	VENTED PLUG	181256	181256	181256

□			**Service Kit Buna**	**9613990662**	**9613990665**	
♦			**Service Kit EPDM**	**9613990663**	**9613990666**	**9613990669**
○			**Service Kit SFY**	**9613990664**	**9613990667**	**9613990670**

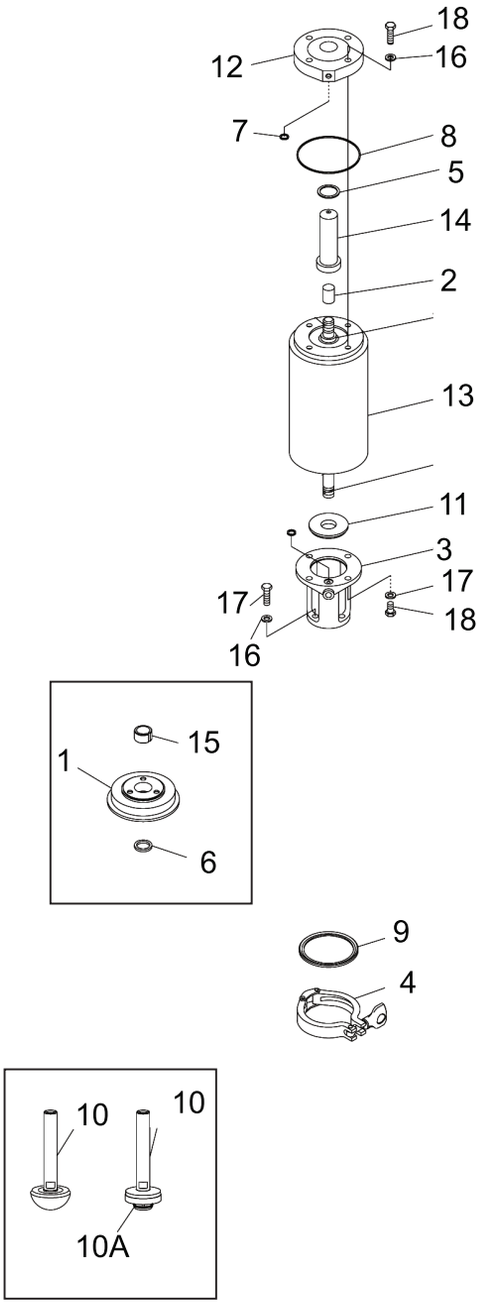
18
12
16
7
8
5
14
2
13
11
3
17
17
18
16
15
1
6
9
4
10
10
10A

Pos		Qty	Denomination	2”	2 1/2”	3”
1		1	ADAPTER BONNET -761 TO 361	9634067604	9634067605	9634067606
2		1	CAPLUG#5/8	750568	750568	750568
3		1	YOKE	751684	751684	751684
4		1	BODY CLAMP	270266	270267	212211
5		1	O-RING USF	755356	755356	755356
6	□	1	STEM O-RING BUNA	755370	755370	755370
	◆	1	STEM O-RING EPDM	750132	750132	750132
	○	1	STEM O-RING SFY	750077	750077	750077
7		2	O-RING USF	755388	755388	755388
8		1	O-RING USF	755472	755472	755472
9	□	1	BODY GASKET BUNA	755417	755419	755420
	◆	1	BODY GASKET EPDM	751799	750812	750322
	○	1	BODY GASKET SFY	750209	750210	750610
10		1	LP STEM-USF	9634055825	9634055826	9634055827
		1	LP STEM-ESF	773116	773199	773014
		1	LP STEM-SFY	773063	773200	773058
11		1	PACKING GLAND	751659	751659	751659
12		1	PLASTIC DOME	751682	751682	751682
13		1	ACTUATOR	750318	750318	750318
14		1	STEM PROTECTOR	750577	750577	750577
15	□◆○	1	STEM BUSHING	763361	763361	763361
16		11	LOCKWASHER	189962	189962	189962
17		7	SCREW	189773	189773	189773
18		4	SCREW	189723	189723	189723
19		1	VENTED PLUG	181256	181256	181256

□	Service Kit Buna	9613990662	9613990665	
◆	Service Kit EPDM	9613990663	9613990666	9613990669
○	Service Kit SFY	9613990664	9613990667	9613990670

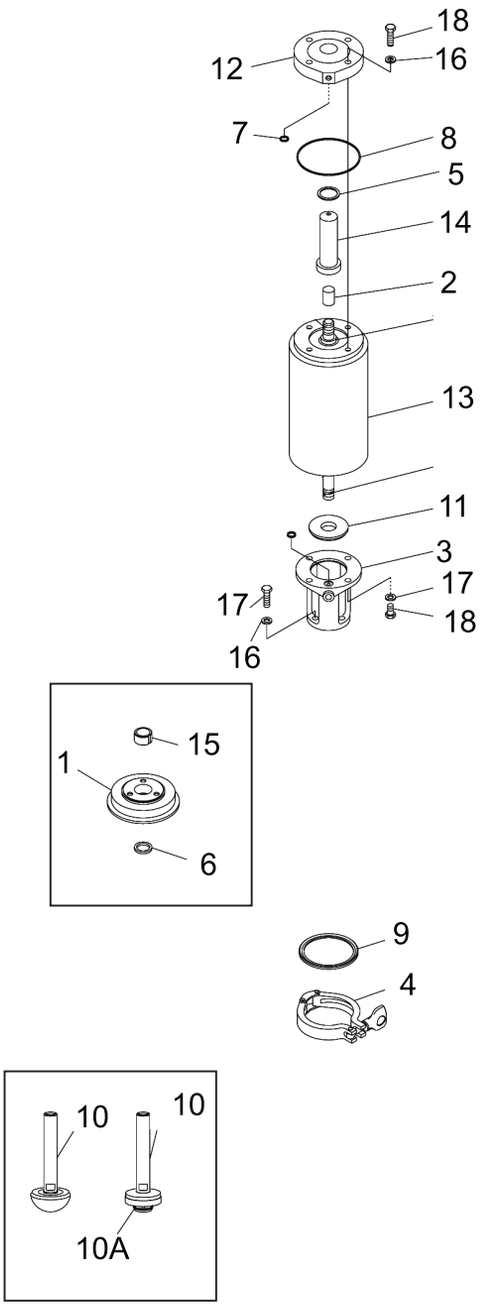
18
12
16
7
8
5
14
2
13
11
3
17
17
18
16
15
1
6
9
4
10
10
10A

Pos		Qty	Denomination	2”	2 1/2”	3”
1		1	ADAPTER BONNET -761 TO 361	9634067604	9634067605	9634067606
2		1	CAPLUG#5/8	750568	750568	750568
3		1	YOKE	750224	750224	750224
4		1	BODY CLAMP	270266	270267	212211
5		1	O-RING USF	755356	755356	755356
6	□	1	STEM O-RING BUNA	755370	755370	755370
	♦	1	STEM O-RING EPDM	750132	750132	750132
	○	1	STEM O-RING SFY	750077	750077	750077
7		2	O-RING USF	755388	755388	755388
8		1	O-RING USF	755472	755472	755472
9	□	1	BODY GASKET BUNA	755417	755419	755420
	♦	1	BODY GASKET EPDM	751799	750812	750322
	○	1	BODY GASKET SFY	750209	750210	750610
10		1	LP STEM-USF	770223	770230	770234
10A	□♦○	1	TR SEAT ONLY	750943	750947	751268
11		1	PACKING GLAND	751659	751659	751659
12		1	PLASTIC DOME	751682	751682	751682
13		1	ACTUATOR	750318	750318	750318
14		1	STEM PROTECTOR	750583	750583	750583
15	□♦○	1	STEM BUSHING	763361	763361	763361
16		11	LOCKWASHER	189962	189962	189962
17		7	SCREW	189773	189773	189773
18		4	SCREW	189723	189723	189723
19		1	VENTED PLUG	181256	181256	181256

♦	Service Kit EPDM	9613990672	9613990675	9613990678
○	Service Kit SFY	9613990673	9613990676	9613990679

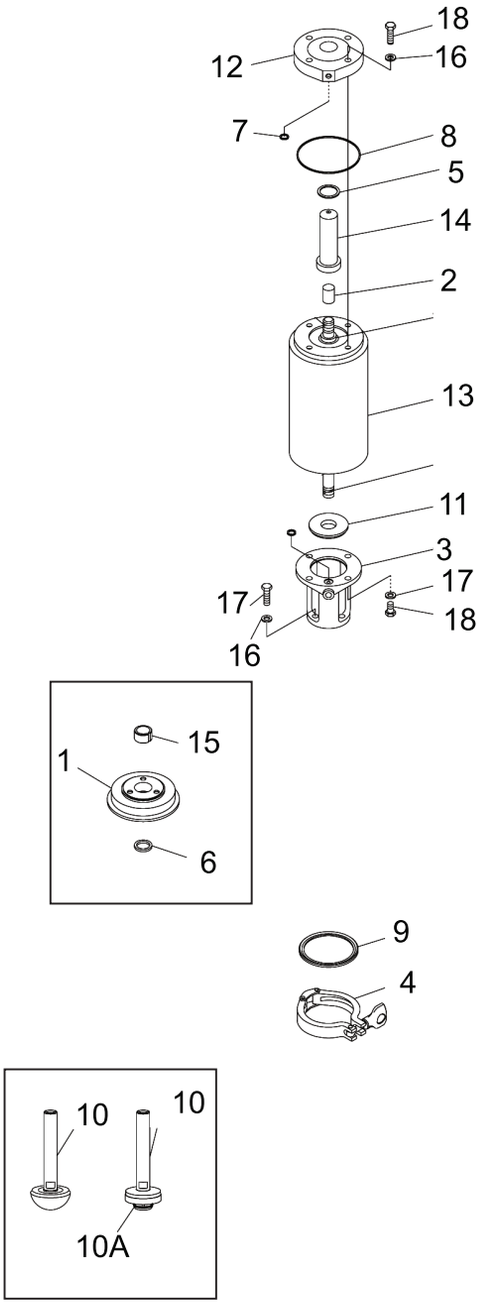
18
16
12
7
8
5
14
2
13
11
3
17
18
17
16
15
1
6
9
4
10
10
10A

Pos	Qty	Denomination	2”	2 1/2”	3”
1	1	ADAPTER BONNET -761 TO 361	9634067604	9634067605	9634067606
2	1	CAPLUG#5/8	750568	750568	750568
3	1	YOKE	751684	751684	751684
4	1	BODY CLAMP	270266	270267	212211
5	1	O-RING USF	755356	755356	755356
6 □	1	STEM O-RING BUNA	755370	755370	755370
♦	1	STEM O-RING EPDM	750132	750132	750132
○	1	STEM O-RING SFY	750077	750077	750077
7	2	O-RING USF	755388	755388	755388
8	1	O-RING USF	755472	755472	755472
9 □	1	BODY GASKET BUNA	755417	755419	755420
♦	1	BODY GASKET EPDM	751799	750812	750322
○	1	BODY GASKET SFY	750209	750210	750610
10	1	TR STEM COMPLETE	770223	770230	770234
10A □♦○	1	TR SEAT ONLY	750943	750947	751268
11	1	PACKING GLAND	751659	751659	751659
12	1	PLASTIC DOME	751682	751682	751682
13	1	ACTUATOR	751681	751681	751681
14	1	STEM PROTECTOR	750577	750577	750577
15 □♦○	1	STEM BUSHING	763361	763361	763361
16	11	LOCKWASHER	189962	189962	189962
17	7	SCREW	189773	189773	189773
18	4	SCREW	189723	189723	189723
19	1	VENTED PLUG	181256	181256	181256

♦	Service Kit EPDM	9613990672	9613990675	9613990678
○	Service Kit SFY	9613990673	9613990676	9613990679

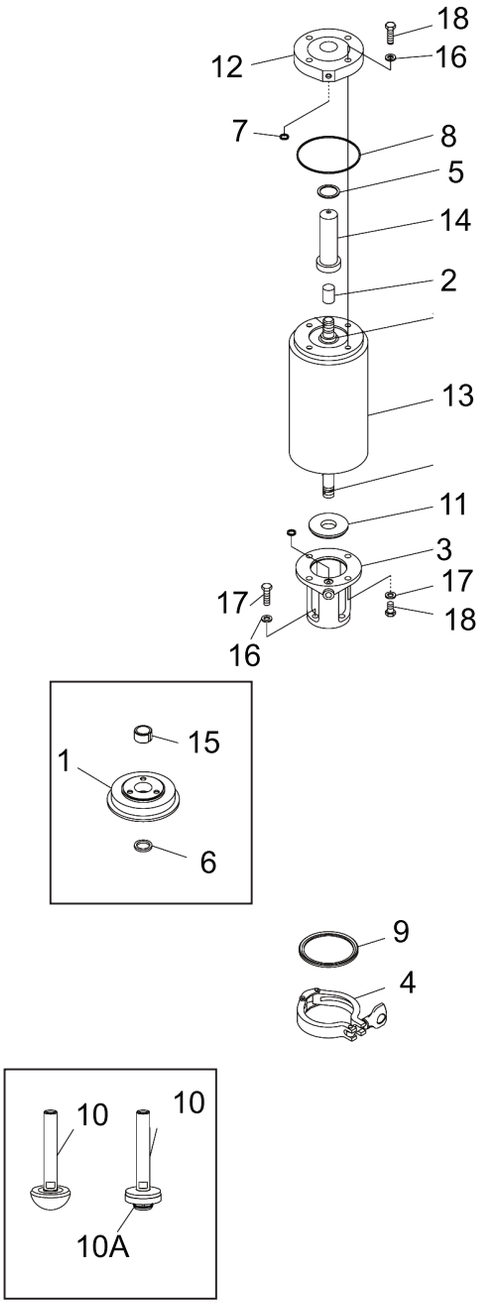
18
12
16
7
8
5
14
2
13
11
3
17
17
18
16
15
1
6
9
4
10
10
10A

Pos		Qty	Denomination	2”	2 1/2”	3”
1		1	ADAPTER BONNET -761 TO 361	9634067604	9634067605	9634067606
2		1	CAPLUG#5/8	750568	750568	750568
3		1	YOKE	750224	750224	750224
4		1	BODY CLAMP	270266	270267	212211
5		1	O-RING USF	755356	755356	755356
6	□	1	STEM O-RING BUNA	755370	755370	755370
	♦	1	STEM O-RING EPDM	750132	750132	750132
	○	1	STEM O-RING SFY	750077	750077	750077
7		2	O-RING USF	755388	755388	755388
8		1	O-RING USF	755472	755472	755472
9	□	1	BODY GASKET BUNA	755417	755419	755420
	♦	1	BODY GASKET EPDM	751799	750812	750322
	○	1	BODY GASKET SFY	750209	750210	750610
10		1	TR2 STEM COMPLETE	9634054774	773080	773086
10A	□♦○	1	TR SEAT ONLY	9634050833	752100	752102
11		1	PACKING GLAND	751659	751659	751659
12		1	PLASTIC DOME	751682	751682	751682
13		1	ACTUATOR	750318	750318	750318
14		1	STEM PROTECTOR	750583	750583	750583
15	□♦○	1	STEM BUSHING	763361	763361	763361
16		11	LOCKWASHER	189962	189962	189962
17		7	SCREW	189773	189773	189773
18		4	SCREW	189723	189723	189723
19		1	VENTED PLUG	181256	181256	181256

□	Service Kit Buna	9613990680	
♦	Service Kit EPDM	9613990681	9613990684	9613990687
○	Service Kit SFY	9613990682	9613990685	9613990688

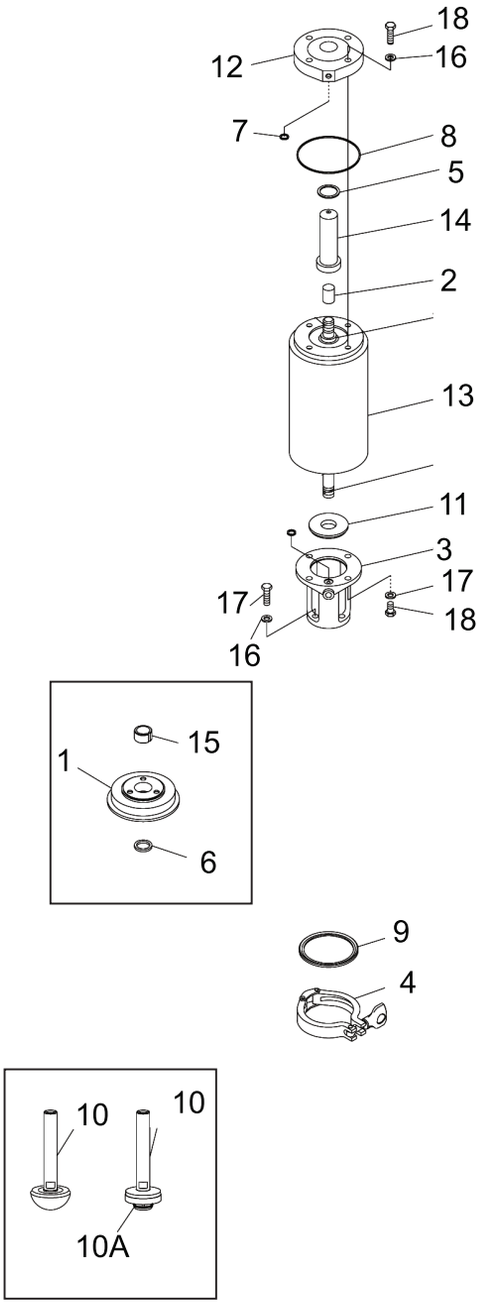
18
12
16
7
8
5
14
2
13
11
3
17
17
18
16
15
1
6
9
4
10
10
10A

Pos		Qty	Denomination	2”	2 1/2”	3”
1		1	ADAPTER BONNET -761 TO 361	9634067604	9634067605	9634067606
2		1	CAPLUG#5/8	750568	750568	750568
3		1	YOKE	751684	751684	751684
4		1	BODY CLAMP	270266	270267	212211
5		1	O-RING USF	755356	755356	755356
6	□	1	STEM O-RING BUNA	755370	755370	755370
	♦	1	STEM O-RING EPDM	750132	750132	750132
	○	1	STEM O-RING SFY	750077	750077	750077
7		2	O-RING USF	755388	755388	755388
8		1	O-RING USF	755472	755472	755472
9	□	1	BODY GASKET BUNA	755417	755419	755420
	♦	1	BODY GASKET EPDM	751799	750812	750322
	○	1	BODY GASKET SFY	750209	750210	750610
10		1	TR2 STEM COMPLETE	9634054774	773080	773086
10A	□♦○	1	TR SEAT ONLY	9634050833	752100	752102
11		1	PACKING GLAND	751659	751659	751659
12		1	PLASTIC DOME	751682	751682	751682
13		1	ACTUATOR	751681	751681	751681
14		1	STEM PROTECTOR	750577	750577	750577
15	□♦○	1	STEM BUSHING	763361	763361	763361
16		11	LOCKWASHER	189962	189962	189962
17		7	SCREW	189773	189773	189773
18		4	SCREW	189723	189723	189723
19		1	VENTED PLUG	181256	181256	181256

□	Service Kit Buna	9613990680	
♦	Service Kit EPDM	9613990681	9613990684	9613990687
○	Service Kit SFY	9613990682	9613990685	9613990688

Ferrule Part Numbers

Valve Model	Ferrule	Valve Only-Less Ferrule
762-21-Size	32-82-3	762-20-2” & 2.5”
	32-82-4	762-20-3” & 4”
762-31-Size	32-84-3	762-20-2” & 2.5”
	32-84-4	762-20-3” & 4”
762-29-Size	32-121	762-28-2” & 2.5” & 3”
	32-180	762-28-4”
762-57-Size	32-154	762-55-2” & 2.5”
	32-595	762-20-3” & 4”
762-58-Size	32-154	762-56-2” & 2.5”
	32-595	762-56-3” & 4”
762-35-Size	32-84-3	762-24-2” & 2.5”
	32-84-4	762-24-3” & 4”
762-33-Size	32-121	762-32-2” & 2.5” & 3”
	32-180	762-32-4”

Tank Pods for Kettle Valves Dimensions

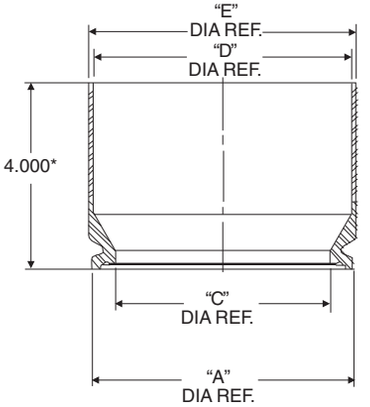

*4” length is standard. Other lengths available per customer requirement.

32-82-3
32-82-4

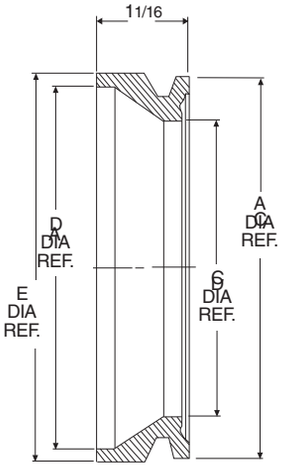

32-84-3
32-84-4

Tank and kettle valve flange, ferrule, tank pods dimensions

Size 32-82 and 32-84

Valve Size (in)	A	C	D	E
	in	in	in	in
3	4.20	3.31	4.25	4.50
4	5.87	4.84	5.78	6.00

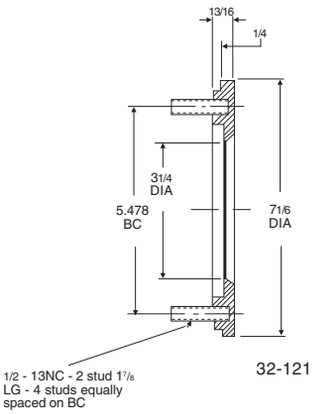

32-121

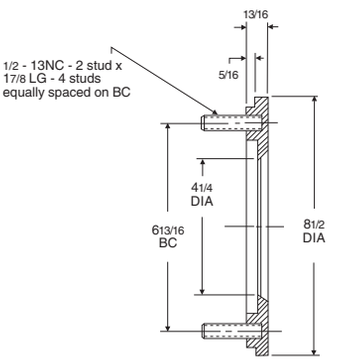

32-180

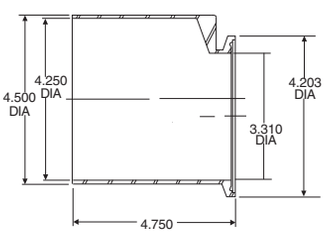

32-154

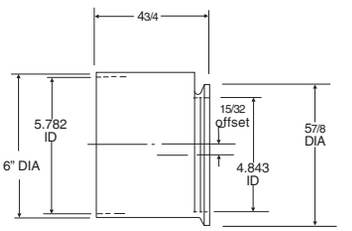

32-595

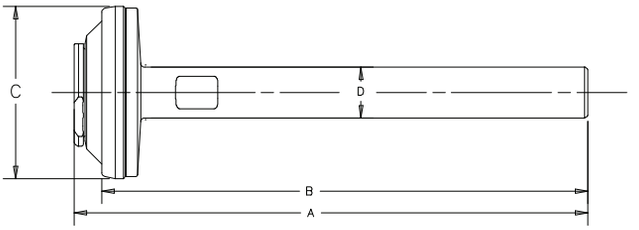

TR2 Plug

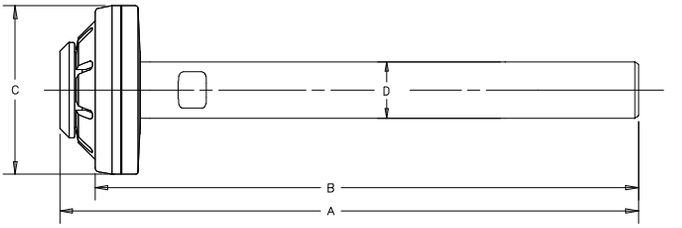

TR Plug

Dimensions are approximate and are intended to aid in identification only. For more information, contact Alfa Laval, Inc.

Series	Size	Part Number (19TR/TR2)	A	B	C	D
761	1 1/2	19TR-1254-1 1/2-316L	5 3/4	5 3/16	1 1/2	3/4
761	2	19TR-1254-2-316L	5 21/32	5 3/16	2 1/16	3/4
761	2 1/2	19TR-1254-2 1/2-316L	5 27/32	5 3/8	2 35/32	3/4
761	3	19TR-1254-3-316L	6 11/32	5 7/8	3 1/16	3/4
761	4	19TR-1254-4-316L	8 17/64	7 13/16	4 1/16	3/4
761	4	19TR-1254A-4-316L	9 3/4	9 19/64	4 1/16	7/8
761	2	19TR-1300-2-316L	5 61/64	5 31/64	2 1/16	3/4
761	2 1/2	19TR-1300-2 1/2-316L	6 29/64	5 63/64	2 17/64	3/4
761	3	19TR-1300-3-316L	6 61/64	6 31/64	3 1/16	3/4
761	1 1/2	19TR-1308-1 1/2-316L	6 29/32	5 7/16	2 1/4	3/4
761	2	19TR-1308-2-316L	7 17/64	7 51/64	2 7/16	3/4
761	2 1/2	19TR-1308-2 1/2-316L	7 39/64	7 9/64	3 23/32	3/4
761	3	19TR-1308-3-316L	8 11/16	8 7/32	4 15/32	3/4
761	4	19TR-1308A-4-316L	12	11 9/16	5 7/8	7/8

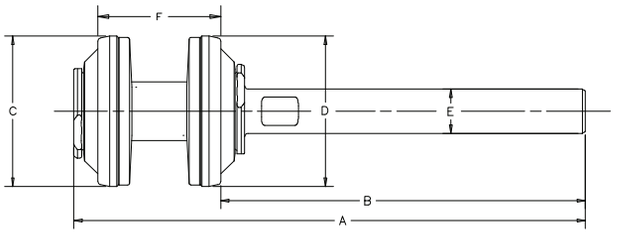

TR2 Plug

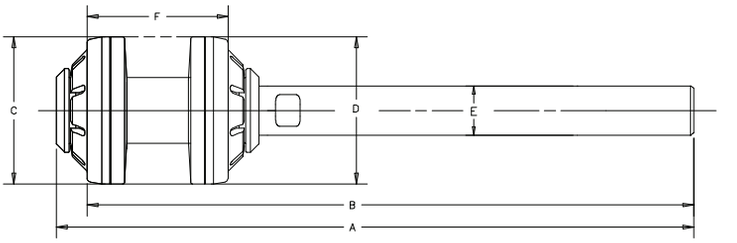

TR Plug

Series	Size	Part Number (19TR/TR2)	A	B	C	D	E	F
761	1 1/2	19TR-1276-1 1/2-316L	9 5/16	5 3/16	1 1/2	2 1/16	3/4	2 17/64
761	2	19TR-1276-2-316L	9 1/4	8 3/4	2 1/16	2 1/16	3/4	2 17/64
761	2 1/2	19TR-1276-2 1/2-316L	10 3/32	9 5/8	2 35/64	2 35/64	3/4	2 29/64
761	3	19TR-1276-3-316L	11 7/64	10 5/8	3 1/6	3 1/16	3/4	3
761LS	1 1/2	19TR-1255-1 1/2-316L	9 19/64	8 47/64	1 1/2	2 1/16	3/4	1 33/64
761LS	2	19TR-1255-2-316L	9 13/64	8 47/64	2 1/16	2 1/16	3/4	1 7/16
761LS	2 1/2	19TR-1255-2 1/2-316L	10 1/16	9 39/64	2 35/64	2 35/64	3/4	1 5/8
761LS	3	19TR-1255-3-316L	11 5/64	10 39/64	3 1/16	3 1/16	3/4	2 1/8
761LS	4	19TR-1255-4-316L	14 29/32	14 11/32	4 1/16	4 1/16	3/4	2 9/32
761LS	4	19TR-1255A-4-316L	15 1/32	14 9/6	4 1/16	4 1/16	7/8	1 7/64

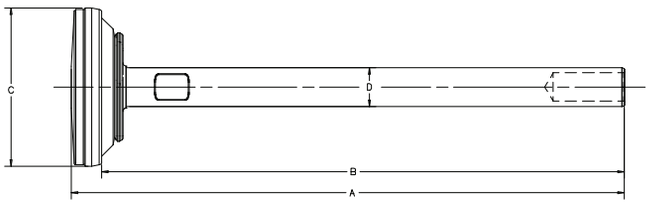

TR2 Plug

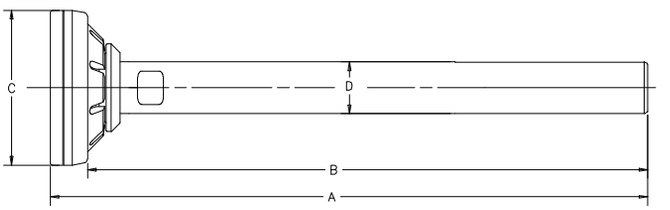

TR Plug

Series	Size	Part Number (19TR/TR2)	A	B	C	D
761	2	19TR-1306-2-316L	6 59/64	6 15/32	2 1/16	3/4
761	2 1/2	19TR-1306-2 1/12-316L	7 19/32	7 1/16	2 35/64	3/4
761	3	19TR-1306-3-316L	8 3/32	7 37/64	3 1/16	3/4

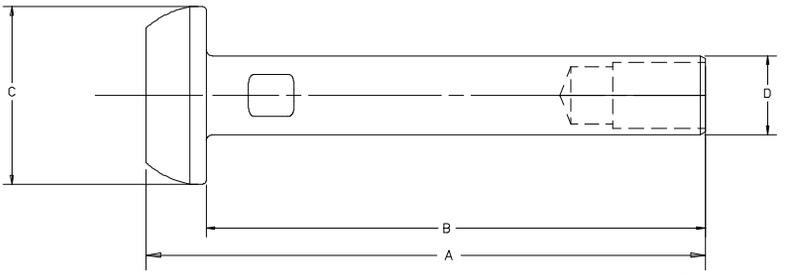

Dimensions are approximate and are intended to aid in identification only. For more information, contact Alfa Laval, Inc.

Series	Size	Part Number	A	B	C	D
761	1 1/2	19LP-1254-1 1/2-316L	5 19/64	4 23/32	1 11/16	3/4
761	2	19LP-1254-2-316L	5 13/32	4 47/65	2 13/64	3/4
761	2 1/2	19LP-1254-2 1/2-316L	5 5/8	4 15/16	2 23/32	3/4
761	3	19LP-1254-3-316L	6 1/8	5 7/16	3 7/32	3/4
761	4	19LP-1295A-4-316L	9 31/64	8 13/16	4 7/32	3/4
861	1 1/2	19LP-1336-1 1/2-316L	6 35/64	5 31/32	1 11/16	3/4
861	2	19LP-1336-2-316L	6 21/64	5 31/32	2 13/64	3/4
861	2 1/2	19LP-1336-2 1/2-316L	6 55/64	6 3/16	2 23/32	3/4
861	3	19LP-1336-3-316L	7 3/8	6 11/16	3 7/32	3/4
861	4	19LP-1426-4-316L	10 25/32	10 3/32	4 7/32	7/8
762	2	19LP-1300-2-316L	5 23/32	5 1/32	2 13/64	3/4
762	2 1/2	19LP-1300-2 1/2-316L	6 7/32	5 13/32	2 23/32	3/4
762	3	19LP-1300-3-316L	6 23/32	6 1/32	3 7/32	3/4
762	4	19LP-1436-3-316L	8 27/32	8 11/64	4 7/32	7/8

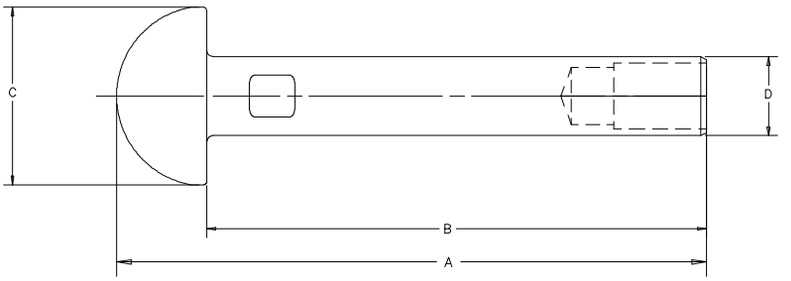

Dimensions are approximate and are intended to aid in identification only. For more information,contact Alfa Laval, Inc.

Series	Size	Part Number	A	B	C	D
761	1 1/2	19-1254-1 1/2-316L	5 29/64	4 23/32	1 11/16	3/4
761	2	19-1254-2-316L	5 3/4	4 37/65	2 9/32	3/4
761	2 1/2	19-1254-2 1/2-316L	6 3/32	4 5/8	2 55/64	3/4
761	3	19-1254-3-316L	6 27/32	5 1/16	3 13/32	3/4
761	4	19-1254-4-316L	7 25/32	6 29/32	4 13/32	3/4
761	4	19-1254A-4-316L	9 17/32	8 5/8	4 13/32	7/8
861	1 1/2	19-1336-1 1/2-316L	6 55/64	5 31/32	1 11/16	3/4
861	2	19-1336-2-316L	7	5 53/64	2 9/32	3/4
861	2 1/2	19-1336-2 1/2-316L	7 11/32	5 43/64	2 55/32	3/4
861	3	19-1336-3-316L	8 3/32	6 5/16	3 13/32	3/4
762	2	19-1300-2-316L	6 1/16	4 3/4	2 9/32	3/4
762	2 1/2	19-1300-2 1/2-316L	6 45/64	5 1/4	2 55/64	3/4
762	3	19-1300-3-316L	7 29/64	6 21/32	3 13/32	3/4

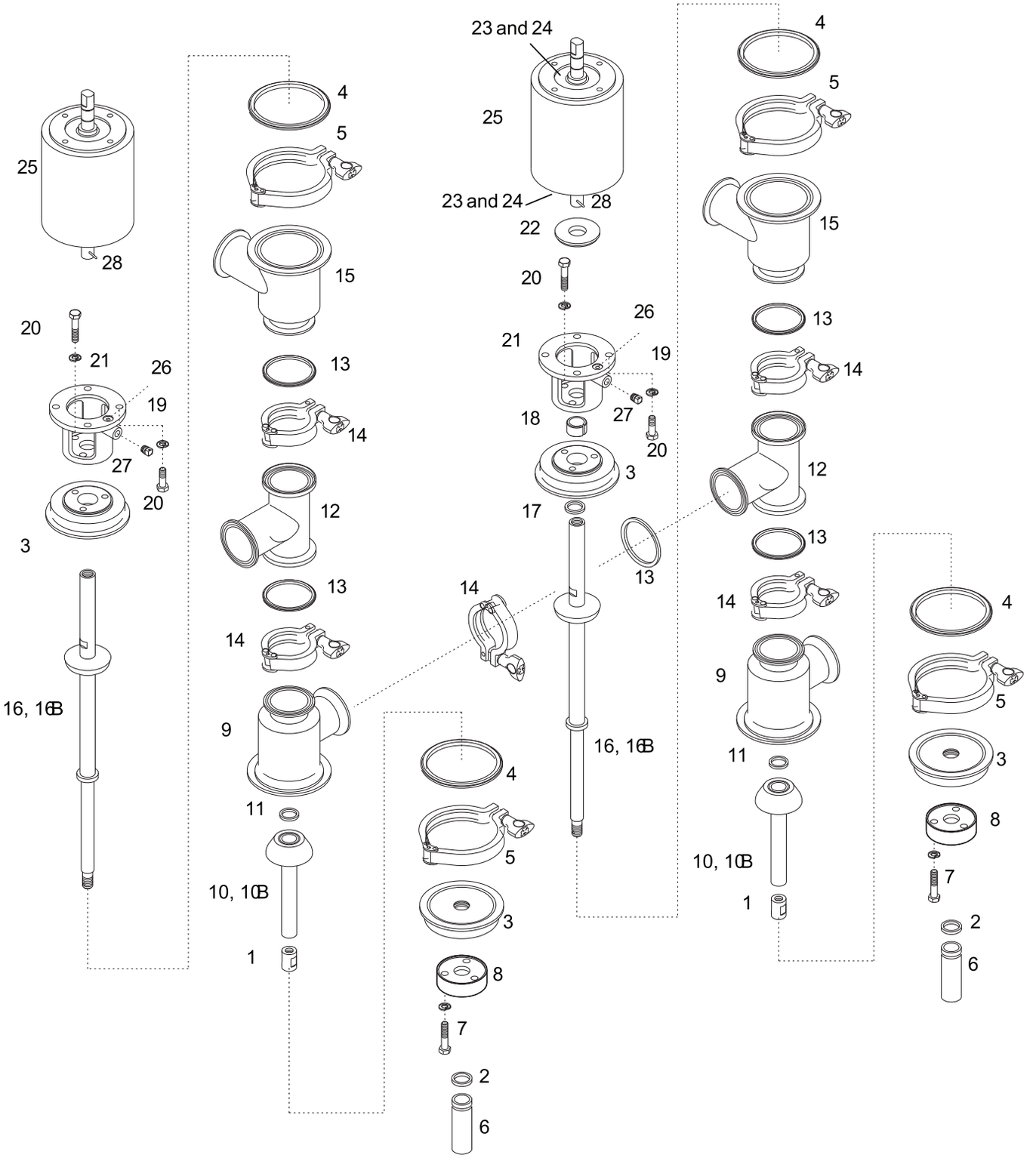
23 and 24
25
28
4
5
15
20
21
26
19
27
18
3
17
13
14
12
9
11
10, 10B
1
16, 16B
2
6
7
8

Pos		Qty	Denomination	2”	2 1/2”	3”	4”
1		2	Nut	751794	751794	751794	751284
2		2	O-ring BUNA	750330	750330	750330	750304
		2	O-ring EPDM	751916	751916	751916	
		2	O-ring SFY	751887	751887	751887	
3		4	Bonnet	750514	751686	751687	751899
4	□♦○	2	Body gasket BUNA	750376	750385	750391	755421
	□♦○	2	Body gasket EPDM	750383	750390	750400	750686
	□♦○	2	Body gasket SFY	750382	750389	750398	750738
5		1	Clamp	212198	212199	212111	212109
6		2	Stem guard	750182	750182	750182	750182
7		6	Screw	189723	189723	189723	189723
8		2	End cap	751795	751795	751795	751283
9		2	R.H. body	771026	771026	771024	771366
10		2	Lower stem BUNA				772293
		2	Lower Stem, LP, BUNA	9634059328	9634059330	9634059333	
		2	Lower Stem, LP, EPDM			9634059332	
		2	Lower Stem, LP (SFY)	9634059326	9604058919	9634059331	
		2	TR lower stem	771396	771405	771426	772766
		2	TR2 lower stem	9634051660	9634054995	9634055129	9634051446
10B	♦	2	TR stem seat lower	750943	750947	751268	750906
	♦	2	TR2 stem seat lower	9634050833	752100	752102	752104
11	□♦○	2	O-ring BUNA	300543	300543	300543	751301
	□♦○	2	O-ring EPDM	300016	300016	300016	752040
	□♦○	2	O-ring SFY	300061	300061	300061	N/A
12		2	Body	771253	771303	771300	772309
13	□♦○	5	Gasket BUNA	298453	298454	298455	298456
	□♦○	5	Gasket EPDM	290043	290048	290036	290018
	□♦○	5	Gasket SFY	290030	290040	290049	290053
14		5	Clamp	212196	212197	212198	212199
15		2	L.H. body	770981	770985	770973	771370
16		2	Stem BUNA				772308
		2	Stem, LP, BUNA	9634059289	9634059291	9634059294	
		2	Stem, LP, EPDM			9634059293	
		2	Stem, LP, SFY		9634058928	9634059292	
		2	TR stem	771397	771411	771434	772374
		2	TR2 stem	9634051657	9634054992	9634055126	9634051449
16B	♦	2	TR stem seat	750943	750947	751268	750906
	○	2	TR2 stem seat	9634050833	752100	752102	752104
17	□♦○	4	O-ring BUNA	755370	755370	755370	755452
	□♦○	4	O-ring EPDM	750132	750132	750132	750956
	□♦○	4	O-ring SFY	750077	750077	750077	750957
18	□♦○	4	Bushing	763361	763361	763361	762507
19		20	Lockwasher	189962	189962	189962	189962
20		14	Screw	189773	189773	189773	189773
21		2	Yoke	750224	750224	750224	750849
22	□♦○	4	Packing retainer	751659	751659	751659	751659
23	□♦○	4	Packing	755461	755461	755461	755461
24		4	Seal retainer	751680	751680	751680	751659
25		2	Actuator	750201	750201	750201	750296
		2	Actuator, HP Options	NA	NA	751222	751222
26	□♦○	2	O-ring	755388	755388	755388	755388
27		2	Vent plug	181256	181256	181256	181256
28	□♦○	4	Pin	750338	750338	750338	750338

Test Gages: 84-5-A Inspection gage for 762MRAL 2” - 3”, 84-5-B Inspection gage for 762MRAL 4”.

See “Green Top Spares” for indication top spares.

Parts marked with □♦○ are included in the service kits.

		2”	2 1/2”	3”	4”
□	Service Kit Buna	9613990390	9613990393	9613990396	9613990399
□	Service Kit EPDM	9613990391	9613990394	9613990397	9613990400
□	Service Kit SFY	9613990392	9613990395	9613990398	9613990401
♦	TR Service Kit Buna	9613990590	9613990593	9613990596	9613990599
♦	TR Service Kit EPDM	9613990591	9613990594	9613990597	9613990600
♦	TR Service Kit SFY	9613990592	9613990595	9613990598	9613990601
○	TR2 Service Kit Buna	9613990602	9613990605	9613990608	9613990611
○	TR2 Service Kit EPDM	9613990603	9613990606	9613990609	9613990612
○	TR2 Service Kit SFY	9613990604	9613990607	9613990610	9613990613

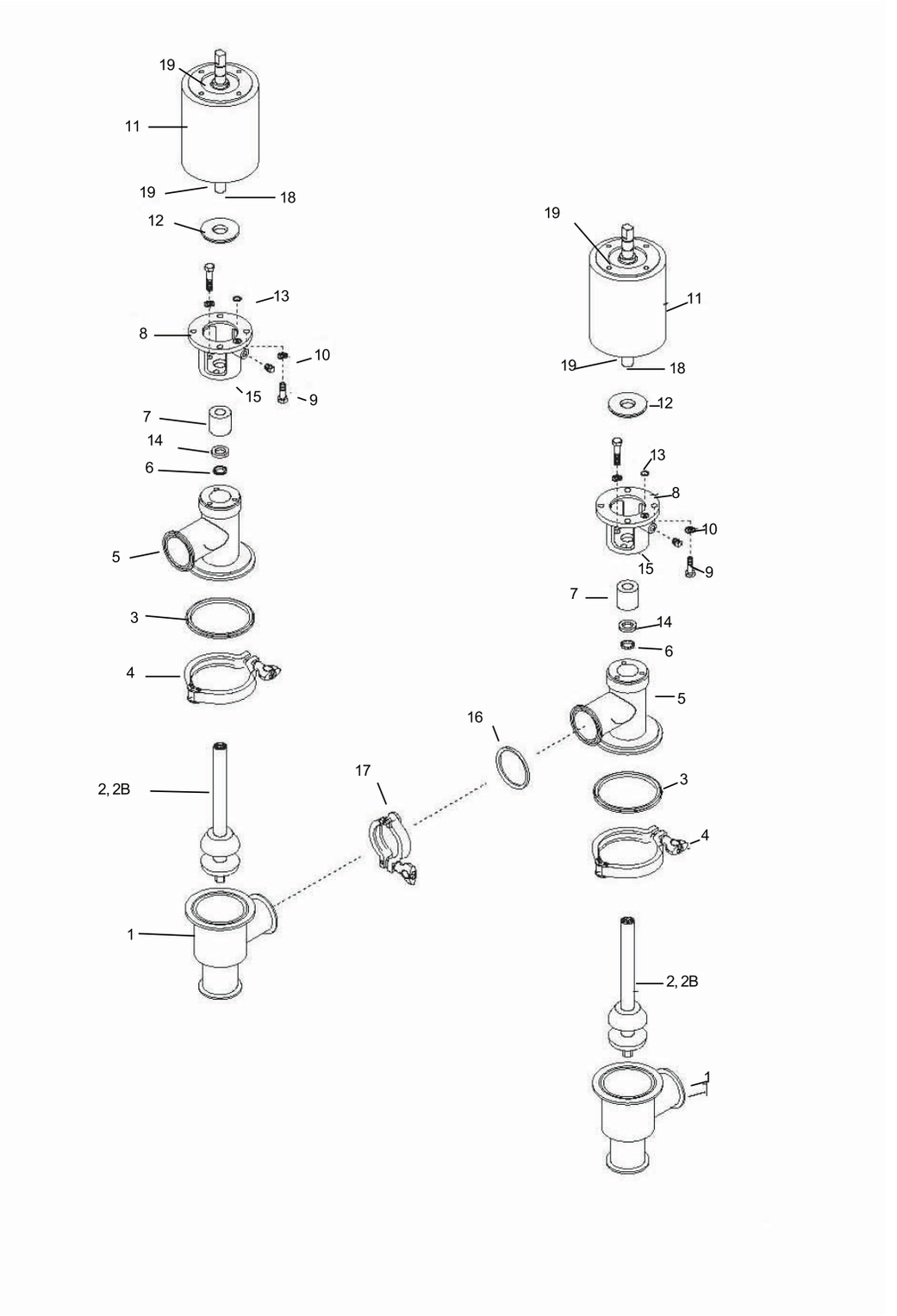
19
11
19
18
12
13
8
10
15
9
7
14
6
5
3
4
2, 2B
1
17
16
19
11
19
18
12
13
8
10
15
9
7
14
6
5
3
4
2, 2B
1

Pos		Qty	Denomination	1 1/2”	2”	2 1/2”	3”
1		2	Lower body	770106	770107	770111	770116
2		2	Stem, LP, BUNA	9634055829	9634055830	9634055831	9634055832
		2	Stem, LP, EPDM	773147	772835	773136	772833
		2	Stem, LP, SFY	773158	9634050983	773137	773142
		2	TR valve plug	770338	770343	770349	770354
		2	TR2 valve plug	9634052007	9634054775	9634052001	9634052008
2B	□	1	TR seat upper	751525	750943	750947	751268
	□	1	TR seat lower	750943	750943	750947	751268
	♦	1	TR2 seat upper	752096	9634050833	752100	752102
	♦	1	TR2 seat lower	9634050833	9634050833	752100	752102
3	□♦○	1	Body gasket BUNA	750376	750376	750385	750391
	□♦○	1	Body gasket EPDM	750383	750383	750390	750400
	□♦○	1	Body gasket SFY	750382	750382	750389	750398
4		2	Clamp	270266	270266	270267	270211
5		2	Upper body	770119	770120	770121	770122
6	□♦○	1	O-ring stem BUNA	755370	755370	755370	755370
	□♦○	1	O-ring stem EPDM	750132	750132	750132	750132
	□♦○	1	O-ring stem SFY	750077	750077	750077	750077
7		1	Bushing	763362	763362	763362	763362
8		2	Yoke	750224	750224	750224	750224
9		14	Screw	189773	189773	189773	189773
10		14	Lockwasher	189962	189962	189962	189962
11		2	Actuator	750201	750201	750201	750201
		2	Actuator, HP Option	NA	NA	751222	751222
12	□♦○	1	Packing retainer	751659	751659	751659	751659
13	□♦○	1	O-ring	755388	755388	755388	755388
14		2	Seal washer	750361	750361	750361	750361
15		1	Vented plug	181256	181256	181256	181256
16		1	Gasket BUNA	298452	298453	298454	298455
		1	Gasket EPDM	290044	290043	290048	290036
		1	Gasket SFY	290022	290030	290040	290049
17		1	Clamp	212195	212196	212196	212198
18	□♦○	1	Pin	750338	750338	750338	750338
19	□♦○	2	Packing	755461	755461	755461	755461

NOTE: 2 service kits required per valve.

See “Green Top Spares” for indication top spares.
Test Gages: 84-3 Inspection gage for 762-227.

Parts marked with □♦○ are included in the service kits.

		1 1/2”	2”	2 1/2”	3”
○	Service Kit Buna	9613990327	9613990327	9613990508	9613990330
○	Service Kit EPDM	9613990328	9613990328	9613990509	9613990331
○	Service Kit SFY	9613990329	9613990329	9613990510	9613990332
□	TR Service Kit Buna	9613990106	9613990109	9613990112	9613990115
□	TR Service Kit EPDM	9613990107	9613990110	9613990113	9613990116
□	TR Service Kit SFY	9613990108	9613990111	9613990114	9613990117
♦	TR2 Service Kit Buna	9613990575	9613990578	9613990581	9613990584
♦	TR2 Service Kit EPDM	9613990576	9613990579	9613990582	9613990585
♦	TR2 Service Kit SFY	9613990577	9613990580	9613990583	9613990586

Standard 761 Actuators

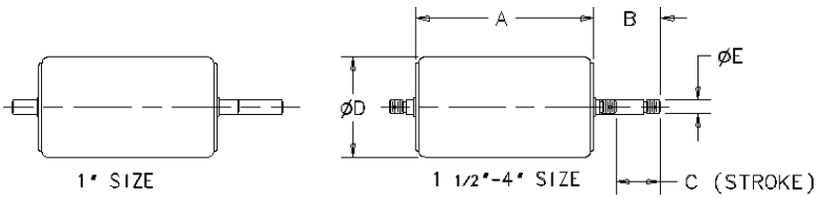

Dimensions are approximate and are intended to aid in identification only. For more information,contact Alfa Laval, Inc.

Valve Size (In)	Part Number	Used on	A (In)	B (In)	C (In)	D (In)	E (In)
1½-3	25428S	761/762 S-TO-A LONG	8-1/16	3	2	4.5	0.623
1½-3	25436S	761/762 S-TO-A SHORT	5 11/16	2 3/16	1 3/16	4.5	0.623
1	25436S	761 SPRING-TO-AIR	4 3/8	1 7/16	13/16	4.5	0.623
2-3	25455S	761-90M-20L S-TO-A	8 1/16	4	3	4.5	0.623
2	25457S	761-90M S-TO-A LONG	10	5 1/2	4 1/2	4.5	0.623
1½-3	25465S	761/741-30S A-TO-A	5 11/16	2 3/16	1 3/16	4.5	0.623
1½-3	25466S	761-10M39L A-TO-A	8 1/16	3	2	4.5	0.623
4	25467S	761-10M-20HPL S-TO-A	10	5 1/2	4 1/2	6	0.623
3 and 4	25468S	761-90M-30L A-TO-A	10	5 5/16	4 5/16	4.5	0.623
1	25475S	761 AIR-TO-AIR	4 3/8	1 7/16	13/16	4.5	0.623
3 and 4	25497S	761-10M-20HPL S-TO-A	8 1/16	3	2	6	0.623
3	25500S	MM251-29H	8 1/16	2 1/2	1 3/16	6	0.623
3	25511S	761-41MWWM-20L S-TO-A	8 1/16	4 3/16	3	4.5	0.623
4	25517S	761 AIR-TO-AIR	10	5 1/2	4 1/2	6	0.623
3-4	25519S	761 AIR-TO-AIR	8 1/16	3	2	6	0.623
1½-3	25520S	761/762 S-TO-A HP SHORT	8 1/16	2 3/8	1 3/8	6	0.623
NONE	25521S	NOT USED	5 11/16	2 3/16	1 3/16	4.5	0.623
4	25522S	761 A-TO-A XLONG STROKE	10	7 1/4	6 1/4	6	0.623
1½-3	25525S	761/762 S-TO-A HP LONG	8 1/16	3 3/16	2	6	0.623

Special Actuator N/C

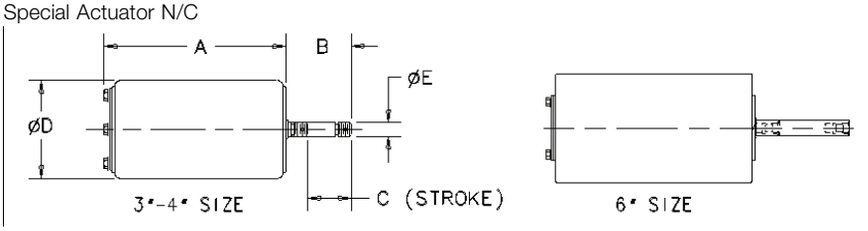

Dimensions are approximate and are intended to aid in identification only. For more information,contact Alfa Laval, Inc.

Valve Size (In)	Part Number	Used on	A (In)	B (In)	C (In)	D (In)	E (In)
3	25481S	762-101M-20L	8 7/16	3 1/2	2 1/2	4.5	0.623
	25486S	NOT USED	8 11/16	3	2	4.5	0.623
3	25491S	762-101M-20L	8 7/16	3	2	4.5	0.623
4	25523S	762-111M-20L	10 7/16	5 1/2	4 1/2	6	0.623
6	25524S	762-112M-20L	15 3/6	7	5 3/16	8	1.125

Mixproof Actuators (Upper)

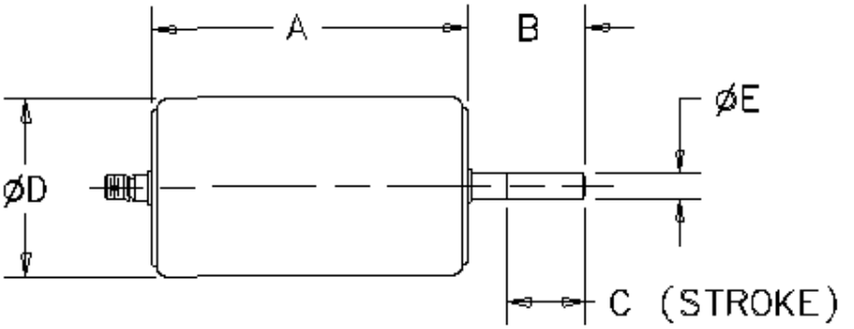

Dimensions are approximate and are intended to aid in identification only. For more information,contact Alfa Laval, Inc.

Valve Size (In)	Part Number	Used on	A (In)	B (In)	C (In)	D (In)	E (In)
2-4	25498S	MM25-29, 20	5 11/16	1 7/16	1 3/16	4.5	0.623
2 1/2 and 3	25507S	MM25-29H29H	8 1/16	1 5/8	1 3/16	6	0.623
4	25508S	MM25-29H29H	8 1/16	2 5/8	2 3/16	6	0.623
4	25513S	MM25-29H29H	9 3/8	2 5/8	2 3/16	6	0.623

Mixproof Actuators (Lower)

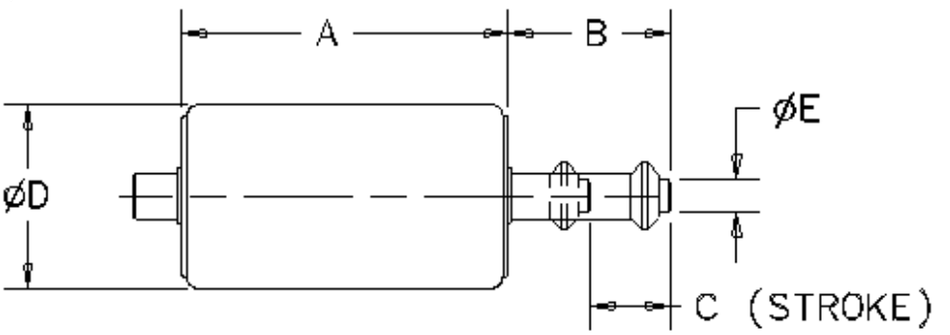

Dimensions are approximate and are intended to aid in identification only. For more information,contact Alfa Laval, Inc.

Valve Size (In)	Part Number	Used on	A (In)	B (In)	C (In)	D (In)	E (In)
4	25498S	MM25-29, 20	10	4	2	6	1.125
2 and 3	25496S	MM25-2919, 2929	5 11/16	3 3/16	1 3/16	4.5	1.125
2 1/2 and 3	25501S	MM25-29H29H	8 1/16	4 1/16	1 3/16	6	1.125
4	25512S	MM25-29H29H	9 3/8	4	2	6	1.125

Manual Actuators

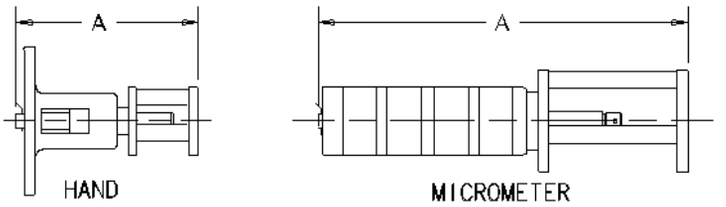

Dimensions are approximate and are intended to aid in identification only. For more information,contact Alfa Laval, Inc.

Valve Size (In)	Part Number	Description	Stroke	A (In)	Used On
4	25488S	MICROMETER HAND ACTUATOR		13 9/16	NOT USED
1 1/2and 3	25472S	HAND ACTUATOR	1 3/6	6 7/8	761-10M-40SB
1	25473S	HAND ACTUATOR	1	6 7/8	761-10M-40SB
4	25514S	HAND ACTUATOR	4	12 3/8	761-10M-40SB

Throttling Actuators with Positioners

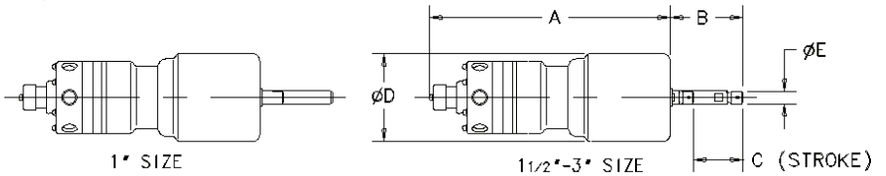

Throttling Actuators with Positioners

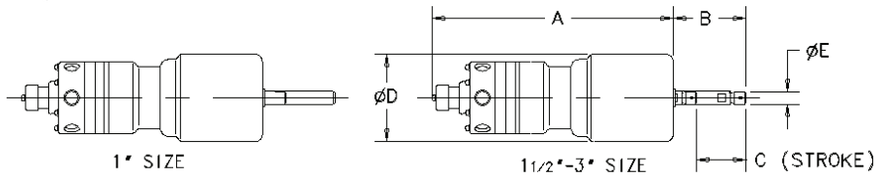

Dimensions are approximate and are intended to aid in identification only. For more information,contact Alfa Laval, Inc.

Valve Size (In)	Part Number	Used on	A (In)	B (In)	C (In)	D (In)	E (In)
1 1/2 - 3	25447S	771S-10M-14D	11 3/4	3 1/8 - 5 5/16	2 3/16	4.45	.623
1	25471S	771S-10M-14D	11 3/4	2 1/8 - 5 5/16	2 3/16	4.45	.623
1 1/2 - 3	25479S	771L-10M-14D	11 3/4	3 1/8 - 5 5/16	2 3/16	4.45	.623
2-3	25518S	771S-10M-14R	11 3/4	3 1/8 - 5 5/16	2 3/16	4.45	.623

Throttling Actuators with Diaphragms

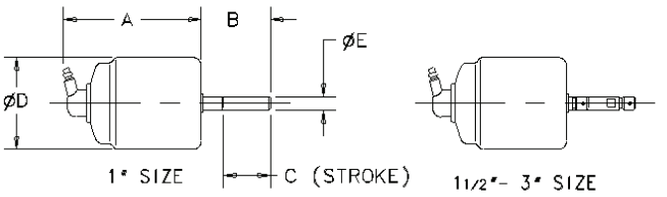

Dimensions are approximate and are intended to aid in identification only. For more information,contact Alfa Laval, Inc.

Valve Size (In)	Part Number	Used on	A (In)	B (In)	C (In)	D (In)	E (In)
1 1/2 - 3	25445S	771S-10M-15	6 7/16	1 1/32 - 3 7/32	2 3/16	4.45	.623
1	25456S	771S-10M-15	6 7/16	2 5/32 - 3	2 3/16	4.45	.623

Reverse Acting Flow Diversion Actuators

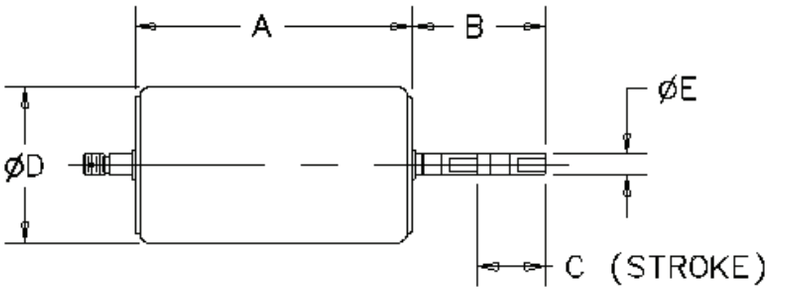

Dimensions are approximate and are intended to aid in identification only. For more information,contact Alfa Laval, Inc.

Valve Size (In)	Part Number	Used on	A (In)	B (In)	C (In)	D (In)	E (In)
2, 2 1/2	25484S	771S-227MRAL	5 11/16	2 15/16	1 3/16	4.45	.623
4	25506S	771S-227MRAL	8 1/32	3 3/16	2	6	.623
2 1/2H, 3H	25509S	771S-227MRAL HEAVY DUTY	8 1/32	2 3/16	1 3/16	6	.623

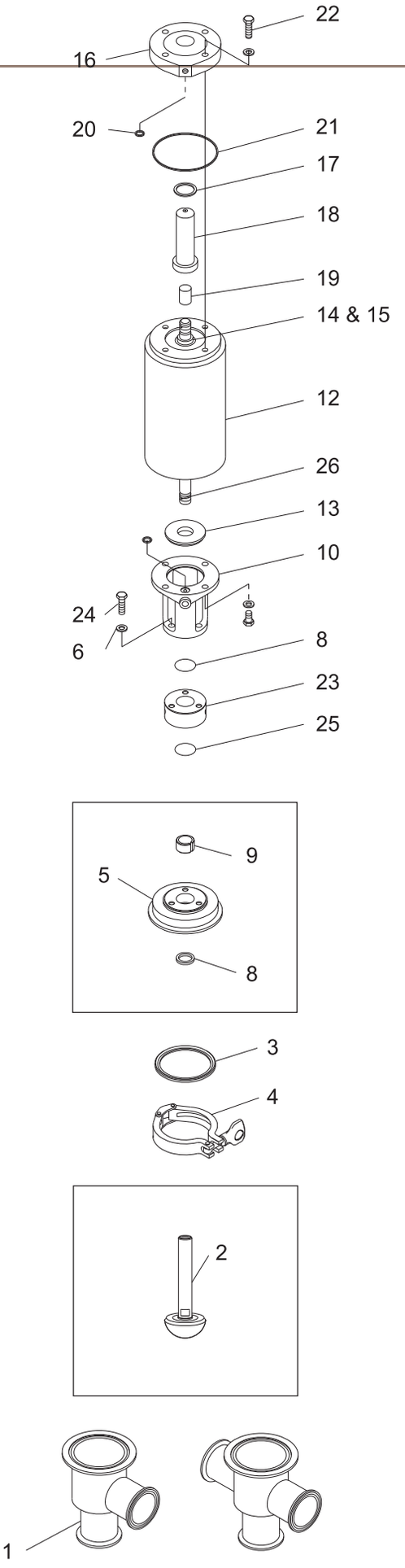
22
16
20
21
17
18
19
14 & 15
12
26
13
10
24
6
8
23
25
9
5
8
3
4
2
1

Pos		Qty	Denomination	1 1/2”	2”	2 1/2”	3”
1		1	Body, 10 tee type	770106	770107	770111	770116
		1	Body, 30 cross type	770269	770273	770275	770279
2		1	Stem, SFY	773103	9634050985	9634051064	773214
3	□	1	Body Gasket, SFY	750382	750382	750389	750398
	♦	1	Body Gasket, EPDM	750383	750383	750390	750400
4		1	Clamp	270266	270266	270267	212211
5		1	Bonnet	750514	750514	751686	751687
6		11	Lockwasher	189962	189962	189962	189962
7		4	Screw	189773	189773	189773	189773
8	□	2	Stem O ring, SFY	750077	750077	750077	750077
	♦	2	Stem O ring, EPDM	750132	750132	750132	750132
9	□	1	Roulon Stem Bushing	761578	761578	761578	761578
10		1	Yoke	750224	750224	750224	750224
11		1	Vent Plug	181256	181256	181256	181256
12		1	Actuator	750318	750318	750318	750318
13		1	Packing Retainer	751659	751659	751659	751659
14		2	Packing	755461	755461	755461	755461
15		2	Packing Retainer	751680	751680	751680	751680
16		1	End Cap	751682	751682	751682	751682
17		1	O ring	755356	755356	755356	755356
18		1	Stem Guard	750583	750583	750583	750583
19		1	Red Caplug	750568	750568	750568	750568
20	□♦	2	O ring	755388	755388	755388	755388
21		1	O ring	755472	755472	755472	755472
22		4	Screw	189723	189723	189723	189723
23		1	Spacer	751488	751488	751488	751488
24		3	Screw	180472	180472	180472	180472
25	□	1	O ring, SFY	751496	751496	751496	751496
	♦	1	O ring, EPDM	9634048098	9634048098	9634048098	9634048098
26		2	Nylon Lock Pin	750338	750338	750338	750338

Parts marked with □♦ are included in the service kits.

		1 1/2”	2”	2 1/2”	3”
□	SFY Service Kits	9613990659	9613990659	9613990660	9613990661
♦	EPDM Service Kits	9613990656	9613990656	9613990657	9613990658

If the actuator is marked with a danger warning do NOT attempt to cut the actuator open.



Do NOT attempt to disassemble the actuator due to spring under load danger!



Do NOT attempt to cut the actuator open, due to spring under load danger!

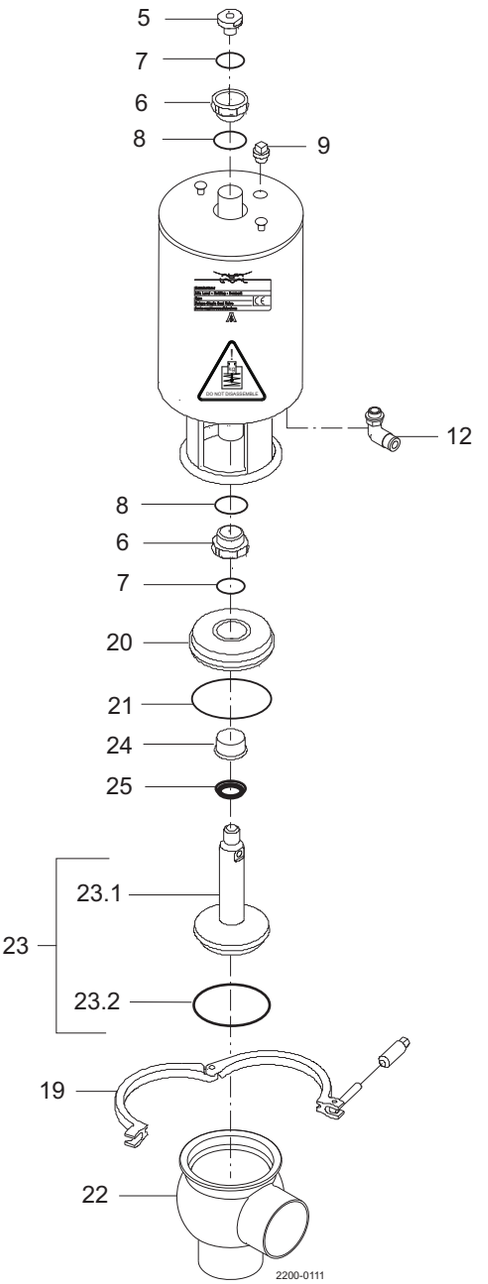

Pos		Qty	Denomination	DN 25 25 mm	DN 40 38 mm	DN 50 51 mm	DN 65 63.5 mm	DN 80 76.1 mm	DN 100 101.6 mm
Actuator									
			Actuator, complete (NO)	9613154801	9613154801	9613154802	9613154803	9613154804	9613154805
			Actuator, complete (NC)	9613154806	9613154806	9613154807	9613154808	9613154809	9613154810
			Actuator, complete (A/A)	9613154811	9613154811	9613154812	9613154813	9613154814	9613154815
5		1	Adapter, plastic (<-- 2015)						
		1	Adapter, steel (2015-2018)	9614065301	9614065301	9614065301	9614065301	9614065301	9614065301
		1	Adapter, steel (2019 -->	9615374701	9615374701	9615374701	9615374701	9615374701	9615374701
6	□	2	Bushing						
7	□	2	O-ring						
8	□	2	O-ring						
9		1	Plug	9613414101	9613414101	9613414101	9613414101	9613414101	9613414101
12		1(2)	Air fitting	9611991988	9611991988	9611991988	9611991988	9611991988	9611991988
Clamp									
19		1	Clamp	9612939303	9612939303	9612939304	9612939305	9612939306	9612939307
Bonnet									
20		1	Bonnet	9613127102	9613127102	9613127103	9613127104	9613127105	9613127106
21	♦	1	O-ring, EPDM (standard)						
		1	O-ring, HNBR						
		1	O-ring, FPM						
			O-ring set, (10 pcs.) EPDM	9614059422	9614059422	9614059425	9614059428	9614059431	9614059434
			O-ring set, (10 pcs.) HNBR	9614059423	9614059423	9614059426	9614059429	9614059432	9614059435
			O-ring set, (10 pcs.) FPM	9614059424	9614059424	9614059427	9614059430	9614059433	9614059436
24		1	Bushing	9613125002	9613125002	9613125002	9613125002	9613125002	9613125002
25	♦	1	Lip seal, EPDM (standard)						
		1	Lip seal, HNBR						
		1	Lip seal, FPM						
			Lip seal set, (10 pcs.) EPDM	9614059419	9614059419	9614059419	9614059419	9614059419	9614059419
			Lip seal set, (10 pcs.) HNBR	9614059420	9614059420	9614059420	9614059420	9614059420	9614059420
			Lip seal set, (10 pcs.) FPM	9614059421	9614059421	9614059421	9614059421	9614059421	9614059421
Valve body									
22		1	Valve body, lower, 2 ports ISO	9613139501	9613139503	9613139505	9613139507	9613139509	9613139511
		1	Valve body, lower, 3 ports ISO	9613139502	9613139504	9613139506	9613139508	9613139510	9613139512
		1	Valve body, lower, 2 ports DIN	9613139601	9613139603	9613139605	9613139607	9613139609	9613139611
		1	Valve body, lower, 3 ports DIN	9613139602	9613139604	9613139606	9613139608	9613139610	9613139612
Valve plug									
23		1	Plug, shut-off, ISO, comp., EPDM (std)	9613138801	9613138802	9613138803	9613138804	9613138805	9613138806
		1	Plug, shut-off, ISO, comp., HNBR	9613138813	9613138814	9613138815	9613138816	9613138817	9613138818
		1	Plug, shut-off, ISO, comp., FPM	9613138825	9613138826	9613138827	9613138828	9613138829	9613138830
		1	Plug, shut-off, DIN, comp., EPDM (std)	9613138807	9613138808	9613138809	9613138810	9613138811	9613138812
		1	Plug, shut-off, DIN, comp., HNBR	9613138819	9613138820	9613138821	9613138822	9613138823	9613138824
		1	Plug, shut-off, DIN, comp., FPM	9613138831	9613138832	9613138833	9613138834	9613138835	9613138836
23.1		1	Plug, shut-off, ISO	9613149601	9613139802	9613139803	9613139804	9613139805	9613139806
		1	Plug, shut-off, DIN	9613149602	9613139808	9613139809	9613139810	9613139811	9613139812
23.2	♦	1	Plug seal, EPDM (standard)						
		1	Plug seal, HNBR						
		1	Plug seal, FPM						
			Plug seat set, (10 pcs.) EPDM	9614059401	9614059404	9614059407	9614059410	9614059413	9614059416
			Plug seat set, (10 pcs.) HNBR	9614059402	9614059405	9614059408	9614059411	9614059414	9614059417
			Plug seat set, (10 pcs.) FPM	9614059403	9614059406	9614059409	9614059412	9614059415	9614059418

Service kits

□	**Service kit, actuator**	**9611926500**	**9611926500**	**9611926500**	**9611926500**	**9611926500**	**9611926500**
♦	**Service kit, EPDM**	**9611926501**	**9611926502**	**9611926503**	**9611926504**	**9611926505**	**9611926506**
♦	**Service kit, HNBR**	**9611926507**	**9611926508**	**9611926509**	**9611926510**	**9611926511**	**9611926512**
♦	**Service kit, FPM**	**9611926513**	**9611926514**	**9611926515**	**9611926516**	**9611926517**	**9611926518**

Parts marked with □ are included in the service kits (actuator)

Parts marked with ♦are included in the service kits (product wetted parts)

Tool for bushing (pos. 24) - item no: 9613160901

TD 900254/3

If the actuator is marked with a danger warning do NOT attempt to cut the actuator open.



Do NOT attempt to disassemble the actuator due to spring under load danger.



Do NOT attempt to cut the actuator open, due to spring under load danger.

AND



Do NOT attempt to cut the actuator open, due to spring under load danger.

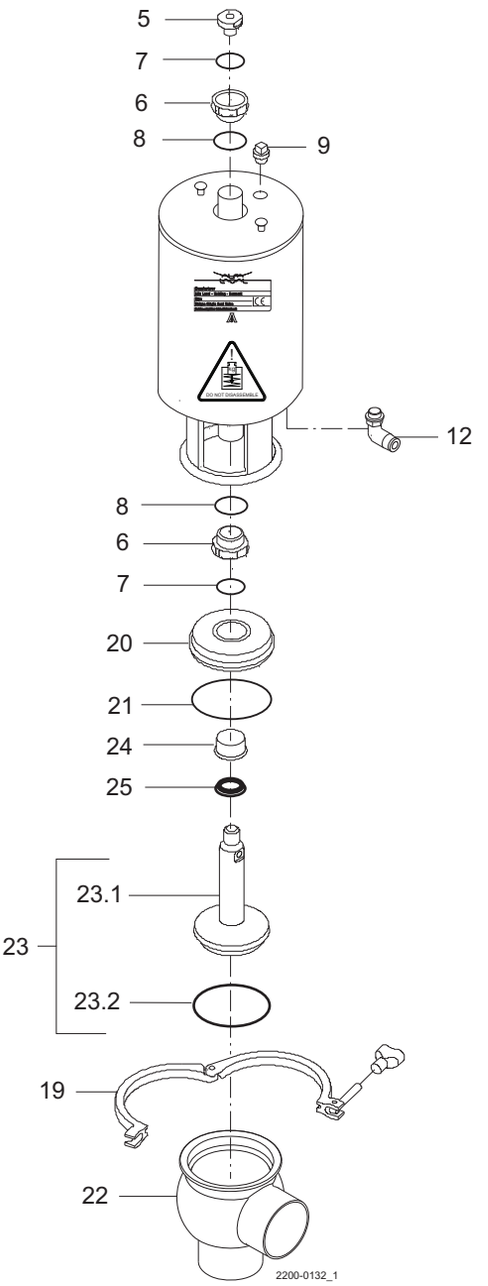

Pos		Qty	Denomination	1"	1½"	2"	2½"	3"	4"
Actuator									
			Actuator, complete (NO)	9613154831	9613154831	9613154832	9613154833	9613154834	9613154835
			Actuator, complete (NC)	9613154836	9613154836	9613163137	9613154838	9613154839	9613163140
			Actuator, complete (AA)	9613163141	9613163141	9613163142	9613163143	9613163144	9613163145
5		1	Adapter, steel (0115 ->)	9614065301	9614065301	9614065301	9614065301	9614065301	9614065301
		1	Adapter, plastic (-> 0115)						
6	□	2	Bushing						
7	□	2	O-ring						
8	□	2	O-ring						
9		1	Plug	9613414101	9613414101	9613414101	9613414101	9613414101	9613414101
12		1(2)	Air fitting	9611994682	9611994682	9611994682	9611994682	9611994682	9611994682
Clamp									
19		1	Clamp	9612939316	9612939316	9612939317	9612939318	9612939319	9612939320
Bonnet									
20		1	Bonnet	9613127102	9613127102	9613127103	9613127104	9613127105	9613127106
21	♦	1	O-ring, EPDM (standard)						
	♦	1	O-ring, HNBR						
	♦	1	O-ring, FPM						
			O-ring, set (10 pcs.) EPDM	9614059422	9614059422	9614059425	9614059428	9614059431	9614059434
			O-ring, set (10 pcs.) HNBR	9614059423	9614059423	9614059426	9614059429	9614059432	9614059435
			O-ring, set (10 pcs.) FPM	9614059424	9614059424	9614059427	9614059430	9614059433	9614059436
24		1	Bushing	9613125002	9613125002	9613125002	9613125002	9613125002	9613125002
25	♦	1	Lip seal, EPDM (standard)						
	♦	1	Lip seal, HNBR						
	♦	1	Lip seal, FPM						
			Lip seal, set (10 pcs.) EPDM	9614059419	9614059419	9614059419	9614059419	9614059419	9614059419
			Lip seal, set (10 pcs.) HNBR	9614059420	9614059420	9614059420	9614059420	9614059420	9614059420
			Lip seal, set (10 pcs.) FPM	9614059421	9614059421	9614059421	9614059421	9614059421	9614059421
Valve body									
22		1	Valve body, lower, 2 ports, clamp	9613161601	9613161603	9613161605	9613161607	9613161609	9613161611
		1	Valve body, lower, 3 ports, clamp	9613161602	9613161604	9613161606	9613161608	9613161610	9613161612
		1	Valve body, lower, 2 ports, welding ends	9613139513	9613139515	9613139517	9613139519	9613139521	9613139523
		1	Valve body, lower, 3 ports, welding ends	9613139514	9613139516	9613139518	9613139520	9613139522	9613139524
Valve Plug									
23		1	Plug, complete, EPDM (standard)	9613138801	9613138802	9613138803	9613138804	9613138805	9613138806
		1	Plug, complete, HNBR	9613138813	9613138814	9613138815	9613138816	9613138817	9613138818
		1	Plug, complete, FPM	9613138825	9613138826	9613138827	9613138828	9613138829	9613138830
23.1		1	Plug	9613149601	9613149602	9613149603	9613149604	9613149605	9613149606
23.2	♦	1	Plug seal, EPDM (standard)						
	♦	1	Plug seal, HNBR						
	♦	1	Plug seal, FPM						
			Plug seal, set (10 pcs.) EPDM	9614059401	9614059404	9614059407	9614059410	9614059413	9614059416
			Plug seal, set (10 pcs.) HNBR	9614059402	9614059405	9614059408	9614059411	9614059414	9614059417
			Plug seal, set (10 pcs.) FPM	9614059403	9614059406	9614059409	9614059412	9614059415	9614059418

Service kits

		1"	1½"	2"	2½"	3"	4"
□	**Service kit, actuator**	**9611926500**	**9611926500**	**9611926500**	**9611926500**	**9611926500**	**9611926500**
♦	**Service kit, EPDM**	**9611926501**	**9611926502**	**9611926503**	**9611926504**	**9611926505**	**9611926506**
♦	**Service kit, HNBR**	**9611926507**	**9611926508**	**9611926509**	**9611926510**	**9611926511**	**9611926512**
♦	**Service kit, FPM**	**9611926513**	**9611926514**	**9611926515**	**9611926516**	**9611926517**	**9611926518**

Recommended spare parts: Service kits.

Parts marked with □ are included in the service kits (actuator).
Parts marked with • are included in the service kits (product wetted parts).

TD 900363/2

If the actuator is marked with a danger warning do NOT attempt to cut the actuator open.



Do NOT attempt to disassemble the actuator due to spring under load danger.



Do NOT attempt to cut the actuator open, due to spring under load danger.

AND



Do NOT attempt to cut the actuator open, due to spring under load danger.

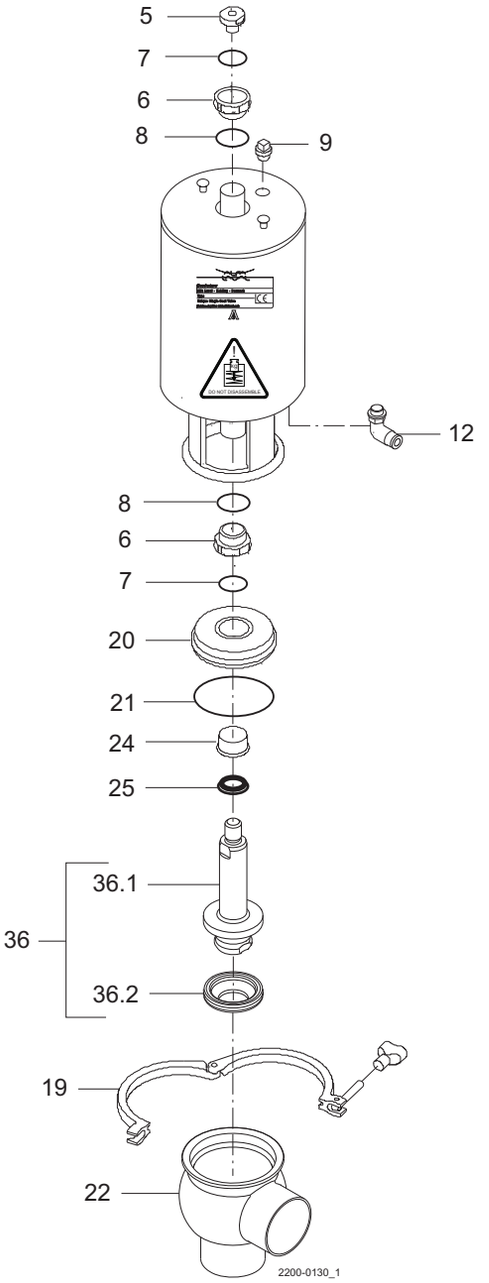

Pos		Qty	Denomination	1”	1½”	2”	2½”	3”	4”
Actuator									
			Actuator, complete (NO)	9613154831	9613154831	9613154832	9613154833	9613154834	9613154835
			Actuator, complete (NC)	9613154836	9613154836	9613163137	9613154838	9613154839	9613163140
			Actuator, complete (AA)	9613163141	9613163141	9613163142	9613163143	9613163144	9613163145
5		1	Adapter, plastic (- 0115)						
		1	Adapter, steel (0115 - 0518)						
		1	Adapter, steel (0518 -)	9615374701	9615374701	9615374701	9615374701	9615374701	9615374701
6	□	2	Bushing						
7	□	2	O-ring						
8	□	2	O-ring						
9		1	Plug	9613414101	9613414101	9613414101	9613414101	9613414101	9613414101
12		1(2)	Air fitting	9611994682	9611994682	9611994682	9611994682	9611994682	9611994682
Clamp									
19		1	Clamp	9612939316	9612939316	9612939317	9612939318	9612939319	9612939320
Bonnet									
20		1	Bonnet	9613127102	9613127102	9613127103	9613127104	9613127105	9613127106
21	♦	1	O-ring, EPDM (standard)						
	♦	1	O-ring, HNBR						
	♦	1	O-ring, FPM						
			O-ring, set (10 pcs.) EPDM	9614059422	9614059422	9614059425	9614059428	9614059431	9614059434
			O-ring, set (10 pcs.) HNBR	9614059423	9614059423	9614059426	9614059429	9614059432	9614059435
			O-ring, set (10 pcs.) FPM	9614059424	9614059424	9614059427	9614059430	9614059433	9614059436
24		1	Bushing	9613125002	9613125002	9613125002	9613125002	9613125002	9613125002
25	♦	1	Lip seal, EPDM (standard)						
	♦	1	Lip seal, HNBR						
	♦	1	Lip seal, FPM						
		1	Lip seal, set (10 pcs.) EPDM	9614059419	9614059419	9614059419	9614059419	9614059419	9614059419
		1	Lip seal, set (10 pcs.) HNBR	9614059420	9614059420	9614059420	9614059420	9614059420	9614059420
		1	Lip seal, set (10 pcs.) FPM	9614059421	9614059421	9614059421	9614059421	9614059421	9614059421
Valve body									
22		1	Valve body, lower, 2 ports, clamp	9613161601	9613161603	9613161605	9613161607	9613161609	9613161611
		1	Valve body, lower, 3 ports, clamp	9613161602	9613161604	9613161606	9613161608	9613161610	9613161612
		1	Valve body, lower, 2 ports, welding ends	9613139513	9613139515	9613139517	9613139519	9613139521	9613139523
		1	Valve body, lower, 3 ports, welding ends	9613139514	9613139516	9613139518	9613139520	9613139522	9613139524
Valve Plug									
36		1	Plug, complete	9613155801	9613155802	9613155803	9613155804	9613155805	9613155806
36.1		1	Plug	9613147301	9613151101	9613151102	9613151103	9613151104	9613151105
36.2	♦	1	Plug seal, PTFE						
		1	Plug seal set, (10 pcs.) PTFE	9614059448	9614059449	9614059450	9614059451	9614059452	9614059453

Service kits

		1”	1½”	2”	2½”	3”	4”
□	**Service kit, actuator**	**9611926500**	**9611926500**	**9611926500**	**9611926500**	**9611926500**	**9611926500**
♦	**Service kit, EPDM**	**9611926576**	**9611926561**	**9611926562**	**9611926563**	**9611926564**	**9611926565**
♦	**Service kit, HNBR**	**9611926577**	**9611926566**	**9611926567**	**9611926568**	**9611926569**	**9611926570**
♦	**Service kit, FPM**	**9611926578**	**9611926571**	**9611926572**	**9611926573**	**9611926574**	**9611926575**

Recommended spare parts; Service kits.

Parts marked with □ are included in the service kits (actuator).
Parts marked with • are included in the service kits (product wetted parts).

TD 900342/2

If the actuator is marked with a danger warning do NOT attempt to cut the actuator open.



Do NOT attempt to disassemble the actuator due to spring under load danger!



Do NOT attempt to cut the actuator open, due to spring under load danger!

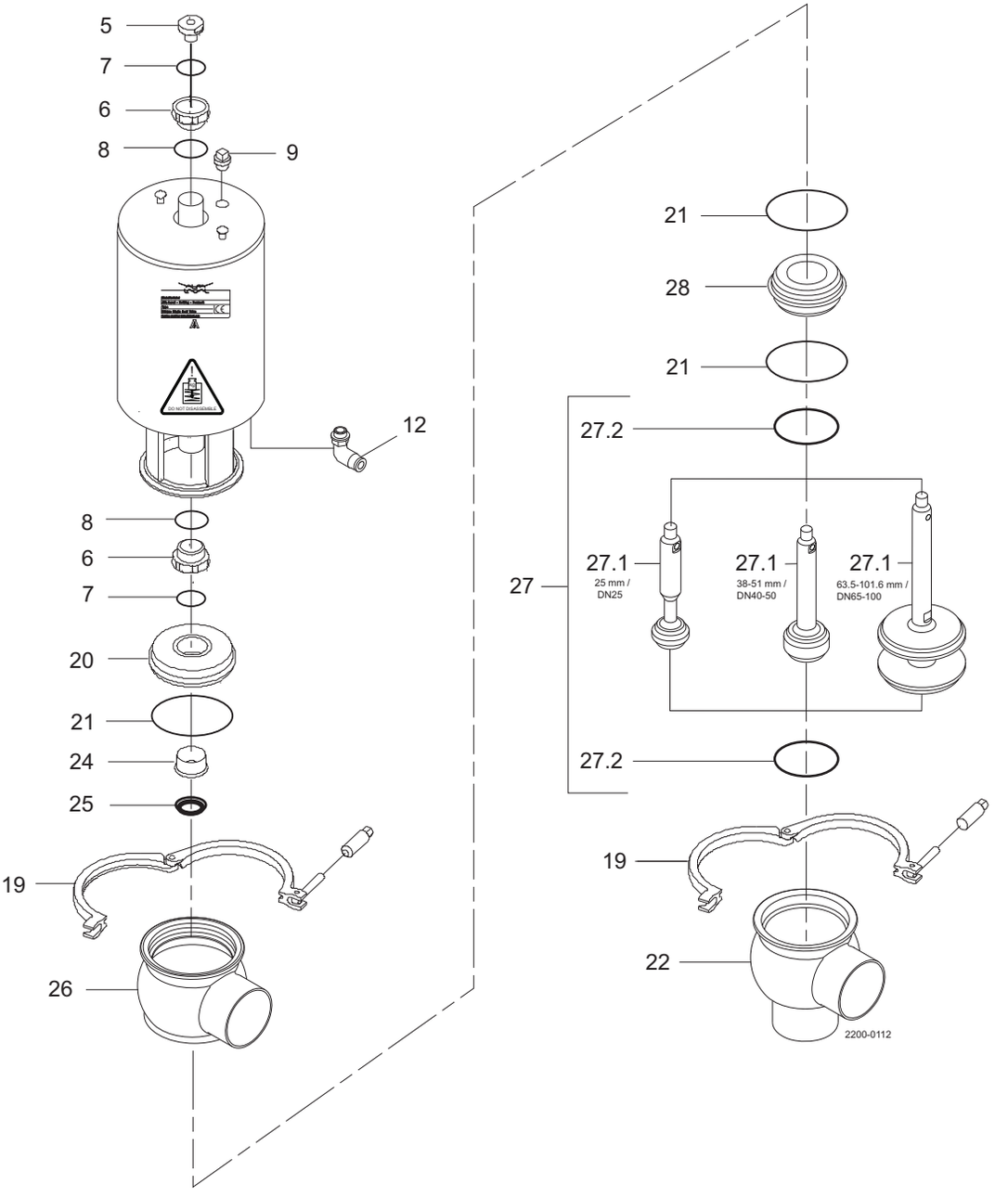

Pos		Qty	Denomination	DN 25 25 mm	DN 40 38 mm	DN 50 51 mm	DN 65 63.5 mm	DN 80 76.1 mm	DN 100 101.6 mm
Actuator									
			Actuator, complete (NO)	9613154801	9613154801	9613154802	9613154803	9613154804	9613154805
			Actuator, complete (NC)	9613154806	9613154806	9613154807	9613154808	9613154809	9613154810
			Actuator, complete (A/A)	9613154811	9613154811	9613154812	9613154813	9613154814	9613154815
5		1	Adapter, plastic (<-- 2015)						
		1	Adapter, steel (2015 - 2018)	9614065301	9614065301	9614065301	9614065301	9614065301	9614065301
		1	Adapter, steel (2019 -->)	9615374701	9615374701	9615374701	9615374701	9615374701	9615374701
6	□	2	Bushing						
7	□	2	O-ring						
8	□	2	O-ring						
9		1	Plug	9613414101	9613414101	9613414101	9613414101	9613414101	9613414101
12		1(2)	Air fitting	9611991988	9611991988	9611991988	9611991988	9611991988	9611991988
Clamp									
19		2	Clamp	9612939303	9612939303	9612939304	9612939305	9612939306	9612939307
Bonnet									
20		1	Bonnet	9613127102	9613127102	9613127103	9613127104	9613127105	9613127106
21	♦	3	O-ring, EPDM (standard)						
		3	O-ring, HNBR						
		3	O-ring, FPM						
			O-ring set, (10 pcs.) EPDM	9614059422	9614059422	9614059425	9614059428	9614059431	9614059434
			O-ring set, (10 pcs.) HNBR	9614059423	9614059423	9614059426	9614059429	9614059432	9614059435
			O-ring set, (10 pcs.) FPM	9614059424	9614059424	9614059427	9614059430	9614059433	9614059436
24		1	Bushing	9613125002	9613125002	9613125002	9613125002	9613125002	9613125002
25	♦	1	Lip seal, EPDM (standard)						
		1	Lip seal, HNBR						
		1	Lip seal, FPM						
			O-ring set, (10 pcs.) EPDM	9614059419	9614059419	9614059419	9614059419	9614059419	9614059419
			O-ring set, (10 pcs.) HNBR	9614059420	9614059420	9614059420	9614059420	9614059420	9614059420
			O-ring set, (10 pcs.) FPM	9614059421	9614059421	9614059421	9614059421	9614059421	9614059421
Seat									
28		1	Seat	9613127501	9613127502	9613127503	9613127504	9613127505	9613127506
Valve body									
26		1	Valve body, upper, 1 port ISO	9613139301	9613139303	9613139305	9613139307	9613139309	9613139311
		1	Valve body, upper, 2 ports ISO	9613139302	9613139304	9613139306	9613139308	9613139310	9613139312
		1	Valve body, upper, 1 port DIN	9613139401	9613139403	9613139405	9613139407	9613139409	9613139411
		1	Valve body, upper, 2 ports DIN	9613139402	9613139404	9613139406	9613139408	9613139410	9613139412
22		1	Valve body , lower, 2 ports ISO	9613139501	9613139503	9613139505	9613139507	9613139509	9613139511
		1	Valve body, lower, 3 ports ISO	9613139502	9613139504	9613139506	9613139508	9613139510	9613139512
		1	Valve body, lower, 2 ports DIN	9613139601	9613139603	9613139605	9613139607	9613139609	9613139611
		1	Valve body, lower, 3 ports DIN	9613139602	9613139604	9613139606	9613139608	9613139610	9613139612
Valve plug									
27		1	Plug, change-over, ISO complete, EPDM (standard)	9613127701	9613127702	9613127703	9613127704	9613127705	9613127706
		1	Plug, change-over, ISO complete, HNBR	9613127713	9613127714	9613127715	9613127716	9613127717	9613127718
		1	Plug, change-over, ISO complete, FPM	9613127725	9613127726	9613127727	9613127728	9613127729	9613127730
		1	Plug, change-over, DIN complete, EPDM (std)	9613127707	9613127708	9613127709	9613127710	9613127711	9613127712
		1	Plug, change-over, DIN complete, HNBR	9613127719	9613127720	9613127721	9613127722	9613127723	9613127724
		1	Plug, change-over, DIN complete, FPM	9613127731	9613127732	9613127733	9613127734	9613127735	9613127736
27.1		1	Plug, change-over, ISO	9613149701	9613140002	9613140003	9613140004	9613140005	9613140006
		1	Plug, change-over, DIN	9613149702	9613140008	9613140009	9613140010	9613140011	9613140012
27.2	♦	2	Plug seal, EPDM (standard)						
		2	Plug seal, HNBR						
		2	Plug seal, FPM						
			Plug seal set, (10 pcs.) EPDM	9614059401	9614059404	9614059407	9614059410	9614059413	9614059416
			Plug seal set, (10 pcs.) HNBR	9614059402	9614059405	9614059408	9614059411	9614059414	9614059417
			Plug seal set, (10 pcs.) FPM	9614059403	9614059406	9614059409	9614059412	9614059415	9614059418
Service kits									
	□		**Service kit, actuator**	**9611926500**	**9611926500**	**9611926500**	**9611926500**	**9611926500**	**9611926500**
	♦		**Service kit, EPDM**	**9611926579**	**9611926580**	**9611926581**	**9611926582**	**9611926583**	**9611926584**
	♦		**Service kit, HNBR**	**9611926585**	**9611926586**	**9611926587**	**9611926588**	**9611926589**	**9611926590**
	♦		**Service kit, FPM**	**9611926591**	**9611926592**	**9611926593**	**9611926594**	**9611926595**	**9611926596**

Parts marked with □ are included in the service kits (actuator)

Parts marked with ♦ are included in the service kits (product wetted parts)

If the actuator is marked with a danger warning do NOT attempt to cut the actuator open.



Do NOT attempt to disassemble the actuator due to spring under load danger.



Do NOT attempt to cut the actuator open, due to spring under load danger.

AND



Do NOT attempt to cut the actuator open, due to spring under load danger.

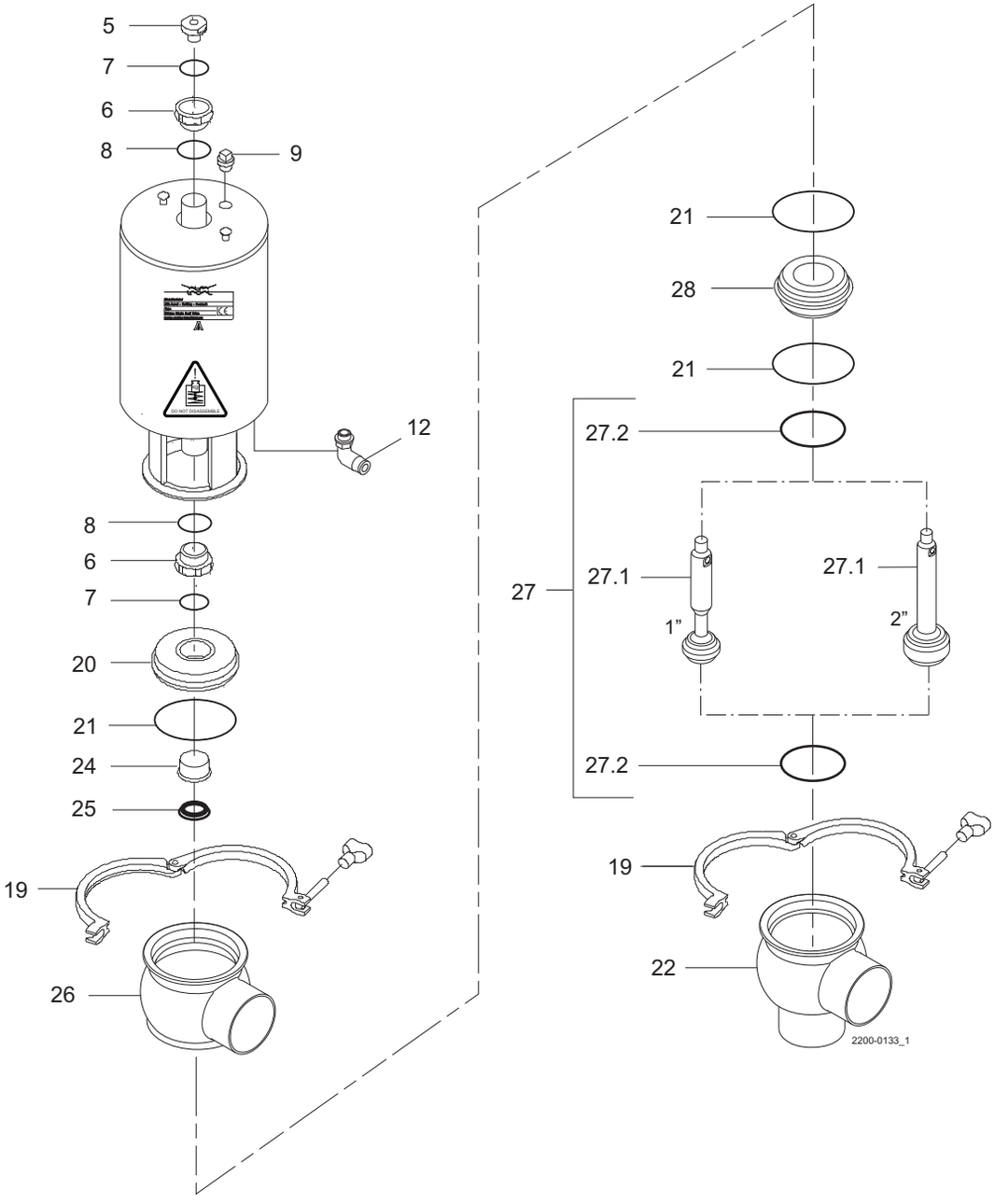

Pos		Qty	Denomination	1"	1½"	2"	2½"	3"	4"
Actuator									
			Actuator, complete (NO)	9613154831	9613154831	9613154832	9613154833	9613154834	9613154835
			Actuator, complete (NC)	9613154836	9613154836	9613163137	9613154838	9613154839	9613163140
			Actuator, complete (AA)	9613163141	9613163141	9613163142	9613163143	9613163144	9613163145
5		1	Adapter, steel (2015 =>)	9614065301	9614065301	9614065301	9614065301	9614065301	9614065301
		1	Adapter, plastic (=> 2015						
6	□	2	Bushing						
7	□	2	O-ring						
8	□	2	O-ring						
9		1	Plug	9613414101	9613414101	9613414101	9613414101	9613414101	9613414101
12		1(2)	Air fitting	9611994682	9611994682	9611994682	9611994682	9611994682	9611994682
Clamp									
19		2	Clamp	9612939316	9612939316	9612939317	9612939318	9612939319	9612939320
Bonnet									
20		1	Bonnet	9613127102	9613127102	9613127103	9613127104	9613127105	9613127106
21	♦	3	O-ring, EPDM (standard)						
	♦	3	O-ring, HNBR						
	♦	3	O-ring, FPM						
			O-ring, set (10 pcs.) EPDM	9614059422	9614059422	9614059425	9614059428	9614059431	9614059434
			O-ring, set (10 pcs.) HNBR	9614059423	9614059423	9614059426	9614059429	9614059432	9614059435
			O-ring, set (10 pcs.) FPM	9614059424	9614059424	9614059427	9614059430	9614059433	9614059436
24		1	Bushing	9613125002	9613125002	9613125002	9613125002	9613125002	9613125002
25	♦	1	Lip seal, EPDM (standard)						
	♦	1	Lip seal, HNBR						
	♦	1	Lip seal, FPM						
		0	Lip seal, set (10 pcs.) EPDM	9614059419	9614059419	9614059419	9614059419	9614059419	9614059419
		0	Lip seal, set (10 pcs.) HNBR	9614059420	9614059420	9614059420	9614059420	9614059420	9614059420
		0	Lip seal, set (10 pcs.) FPM	9614059421	9614059421	9614059421	9614059421	9614059421	9614059421
Seat									
28		1	Seat	9613127501	9613127502	9613127503	9613127504	9613127505	9613127506
Valve body									
26		1	Valve body, upper, 1 port, clamp	9613161501	9613161503	9613161505	9613161507	9613161509	9613161511
		1	Valve body, upper, 2 ports, clamp	9613161502	9613161504	9613161506	9613161508	9613161510	9613161512
		1	Valve body, upper, 1 port, welding ends	9613139313	9613139315	9613139317	9613139319	9613139321	9613139323
		1	Valve body, upper, 2 ports, welding ends	9613139314	9613139316	9613139318	9613139320	9613139322	9613139324
22		1	Valve body, lower, lower, 2 ports, clamp	9613161601	9613161603	9613161605	9613161607	9613161609	9613161611
		1	Valve body, lower, lower, 3 ports, clamp	9613161602	9613161604	9613161606	9613161608	9613161610	9613161612
		1	Valve body, lower, 2 ports, welding ends	9613139513	9613139515	9613139517	9613139519	9613139521	9613139523
		1	Valve body, lower, 3 ports, welding ends	9613139514	9613139516	9613139518	9613139520	9613139522	9613139524
Valve Plug									
27		1	Plug, ISO complete, EPDM (standard)	9613127701	9613127702	9613127703	9613127704	9613127705	9613127706
		1	Plug, ISO complete, HNBR	9613127713	9613127714	9613127715	9613127716	9613127717	9613127718
		1	Plug, ISO complete, FPM	9613127725	9613127726	9613127727	9613127728	9613127729	9613127730
27.1		1	Plug, ISO	9613149701	9613140002	9613140003	9613140004	9613140005	9613140006
27.2	♦	2	Plug seal , EPDM (standard)						
	♦	2	Plug seal, HNBR						
	♦	2	Plug seal, FPM						
			Plug seal, set (10 pcs.) EPDM	9614059401	9614059404	9614059407	9614059410	9614059413	9614059416
			Plug seal, set (10 pcs.) HNBR	9614059402	9614059405	9614059408	9614059411	9614059414	9614059417
			Plug seal, set (10 pcs.) FPM	9614059403	9614059406	9614059409	9614059412	9614059415	9614059418

		1"	1½"	2"	2½"	3"	4"
□	**Service kit, actuator**	**9611926500**	**9611926500**	**9611926500**	**9611926500**	**9611926500**	**9611926500**
♦	**Service kit, EPDM**	**9611926579**	**9611926580**	**9611926581**	**9611926582**	**9611926583**	**9611926584**
♦	**Service kit, HNBR**	**9611926585**	**9611926586**	**9611926587**	**9611926588**	**9611926589**	**9611926590**
♦	**Service kit, FPM**	**9611926591**	**9611926592**	**9611926593**	**9611926594**	**9611926595**	**9611926596**

Recommended spare parts; Service kits.

Parts marked with □ are included in the service kits (actuator).

Parts marked with • are included in the service kits (product wetted parts).

TD 900363/2

If the actuator is marked with a danger warning do NOT attempt to cut the actuator open.



Do NOT attempt to disassemble the actuator due to spring under load danger.



Do NOT attempt to cut the actuator open, due to spring under load danger.

AND



Do NOT attempt to cut the actuator open, due to spring under load danger.

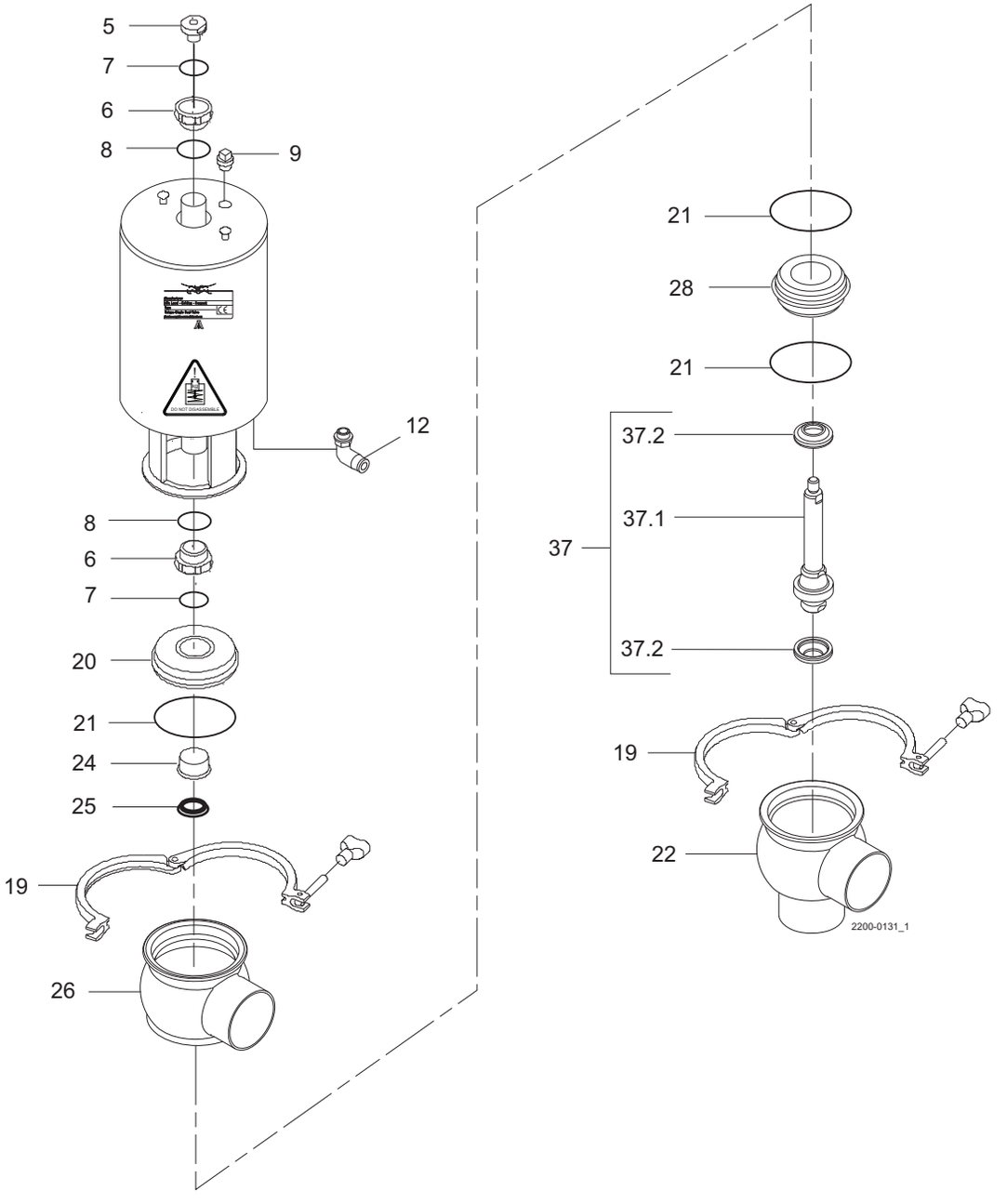

Pos		Qty	Denomination	1½"	2"	2½"	3"	4"
Actuator								
			Actuator, complete (NO)	9613154831	9613154832	9613154833	9613154834	9613154835
			Actuator, complete (NC)	9613154836	9613163137	9613154838	9613154839	9613163140
5		1	Adapter, plastic (- 0115)					
		1	Adapter, steel (0115 - 0518)					
		1	Adapter, steel (0518 -)	9615374701	9615374701	9615374701	9615374701	9615374701
6	□	2	Bushing					
7	□	2	O-ring					
8	□	2	O-ring					
9		1	Plug	9613414101	9613414101	9613414101	9613414101	9613414101
12		1(2)	Air fitting	9611994682	9611994682	9611994682	9611994682	9611994682
Clamp								
19		2	Clamp	9612939316	9612939317	9612939318	9612939319	9612939320
Bonnet								
20		1	Bonnet	9613127102	9613127103	9613127104	9613127105	9613127106
21	♦	3	O-ring, EPDM, (standard)					
	♦	3	O-ring, HNBR					
	♦	3	O-ring, FPM					
			O-ring, set (10 pcs.) EPDM	9614059422	9614059425	9614059428	9614059431	9614059434
			O-ring, set (10 pcs.) HNBR	9614059423	9614059426	9614059429	9614059432	9614059435
			O-ring, set (10 pcs.) FPM,	9614059424	9614059427	9614059430	9614059433	9614059436
24		1	Bushing	9613125002	9613125002	9613125002	9613125002	9613125002
25	♦	1	Lip seal, EPDM (standard)					
	♦	1	Lip seal, HNBR					
	♦	1	Lip seal, FPM					
Seat								
28		1		9613127502	9613127503	9613127504	9613127505	9613127506
Valve body								
26		1	Valve body, upper, 1 port, clamp	9613161503	9613161505	9613161507	9613161509	9613161511
		1	Valve body, upper, 2 ports, clamp	9613161503	9613161506	9613161508	9613161510	9613161512
		1	Valve body, upper, 1 port, welding ends	9613139315	9613139317	9613139319	9613139321	9613139323
		1	Valve body, lower, 2 ports, welding ends	9613139316	9613139318	9613139320	9613139322	9613139324
22		1	Valve body, lower, 2 ports, clamp	9613161603	9613161605	9613161607	9613161609	9613161611
		1	Valve body, lower, 3 ports, clamp	9613161604	9613161606	9613161608	9613161610	9613161612
		1	Valve body, lower, 2 ports, welding ends	9613139515	9613139517	9613139519	9613139521	9613139523
		1	Valve body, lower, 3 ports, welding ends	9613139516	9613139518	9613139520	9613139522	9613139524
Valve Plug								
37		1	Plug, complete	9613155502	9613155503	9613155504	9613155505	9613155506
37.1		1	Plug	9613155401	9613155402	9613155403	9613155404	9613155405
37.2	♦	2	Plug seal , PTFE					
		2	Plug seal, set (10 pcs.) PTFE TR-2	9614059449	9614059450	9614059451	9614059452	9614059453

Service kits

		1½"	2"	2½"	3"	4"
□	**Service kit, actuator**	**9611926500**	**9611926500**	**9611926500**	**9611926500**	**9611926500**
♦	**Service Kit, EPDM**	**9611926633**	**9611926634**	**9611926635**	**9611926636**	**9611926637**
♦	**Service kit, HNBR**	**9611926638**	**9611926639**	**9611926640**	**9611926641**	**9611926642**
♦	**Service kit, FPM**	**9611926643**	**9611926644**	**9611926645**	**9611926646**	**9611926647**

Recommended spare parts; Service kits.

Parts marked with □ are included in the service kits (actuator).
Parts marked with • are included in the service kits (product wetted parts).

TD 900342/2

If the actuator is marked with a danger warning do NOT attempt to cut the actuator open.



Do NOT attempt to disassemble the actuator due to spring under load danger!



Do NOT attempt to cut the actuator open, due to spring under load danger!

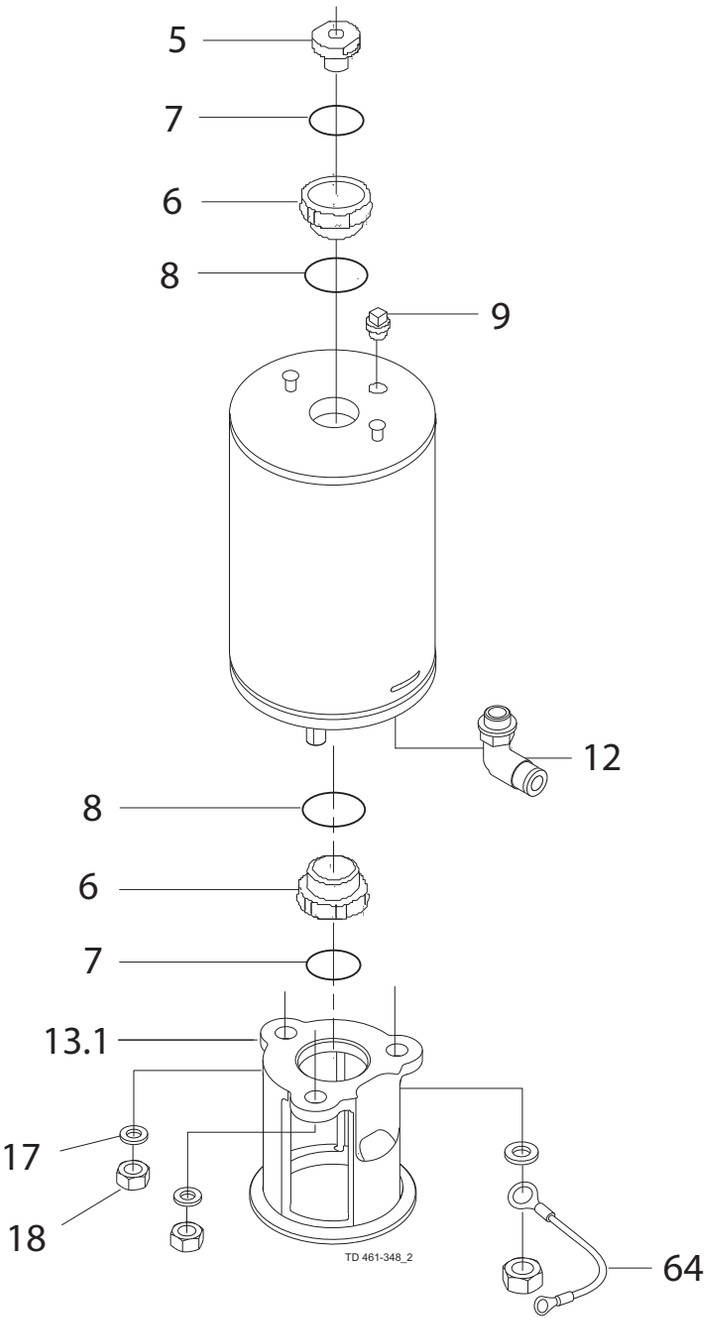

Pos		Qty	Denomination	DN 25 25 mm	DN 40 38 mm	DN 50 51 mm	DN 65 63.5 mm	DN 80 76.1 mm	DN 100 101.6 mm
Actuator									
			Actuator, complete (NO)						
			Actuator, complete (NC)						
			Actuator, complete (A/A)						
5		1	Adapter, plastic (- 0115)						
		1	Adapter, steel (0115 - 0518)						
		1	Adapter, steel (0518 -)	9615374701	9615374701	9615374701	9615374701	9615374701	9615374701
6	□	2	Bushing						
7	□	2	O-ring						
8	□	2	O-ring						
9		1	Plug	9613414101	9613414101	9613414101	9613414101	9613414101	9613414101
12		1	Air fitting	9611991988	9611991988	9611991988	9611991988	9611991988	9611991988
13.1		1	Yoke , (outphased)						
15		1	Bottom , (outphased)						
17		3	Washer , (outphased)						
18		3	Nut , (outphased)						
64		1	Ground wire	9613464301	9613464301	9613464301	9613464301	9613464301	9613464301
116		1	Bolt	9611991686	9611991686	9611991686	9611991686	9611991686	9611991686

		DN 25 25 mm	DN 40 38 mm	DN 50 51 mm	DN 65 63.5 mm	DN 80 76.1 mm	DN 100 101.6 mm
Service kits							
□	**Service kit, actuator**	**9611926500**	**9611926500**	**9611926500**	**9611926500**	**9611926500**	**9611926500**

Parts marked with □ are included in the service kits (actuator)
Tool for bushing (pos. 24) - item no: 9613160901

TD 900510/3

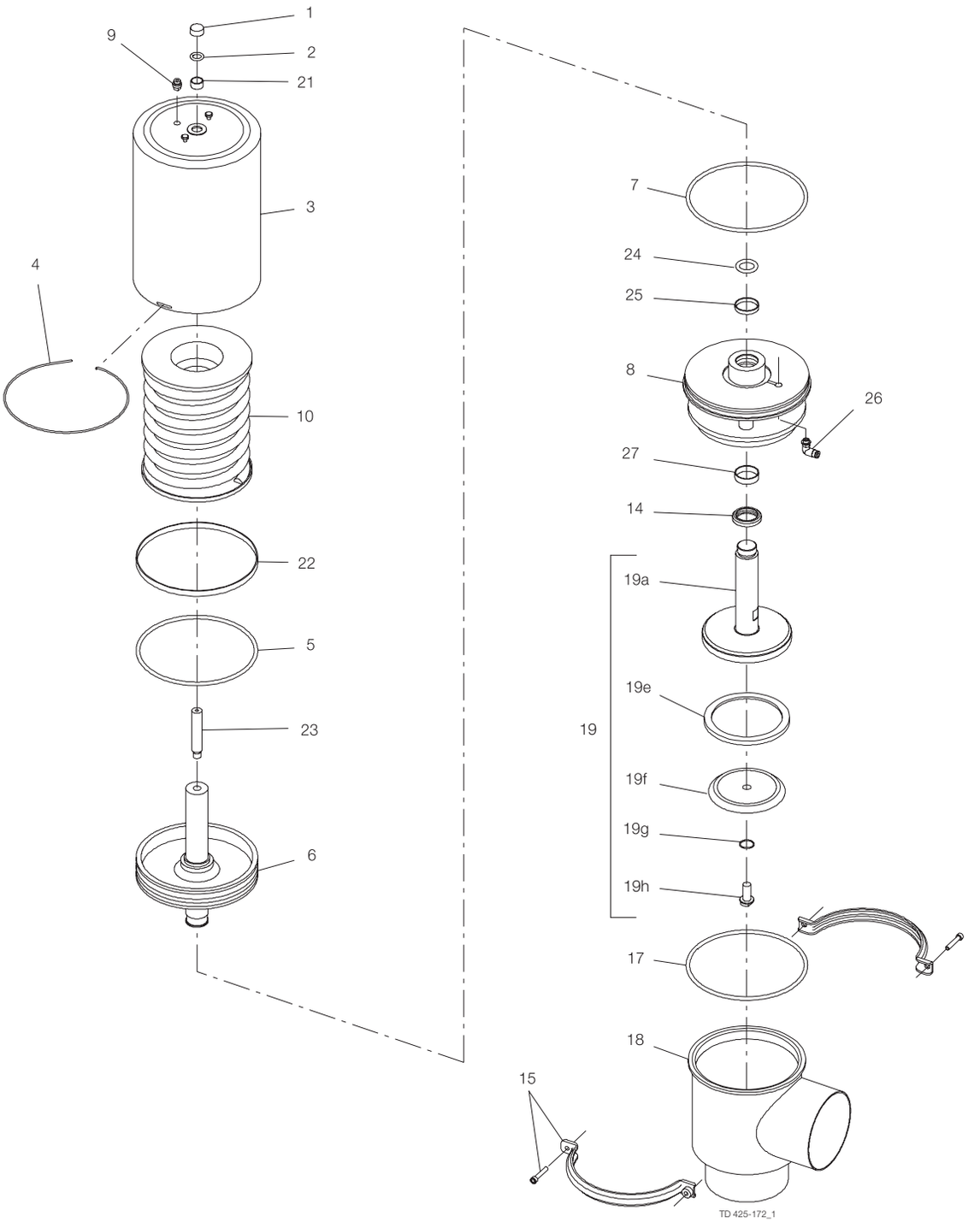
1
9
2
21
3
4
10
22
5
23
6
7
24
25
8
26
27
14
19a
19e
19
19f
19g
19h
17
18
15
TD 425-172_1

Pos		Qty	Denomination	NC	NO
			Actuator, complete	9612465701	9612465702
1		1	Cap	9611993060	9611993060
2	□	1	O-ring		
3		1	Cylinder	9612465501	9612465501
4	□	1	Lock wire		
5	□	1	O-ring		
6		1	Piston		
7	□	1	O-ring	9611992892	9611992892
8		1	Bonnet	9612508001	9612508001
9		1	Plug		
10		1	Spring packet	9612441301	9612441301
21	□	1	Guide ring		
22	□	1	Guide ring		
23		1	Top pin	9612440801	9612440801
24	□	1	O-ring		
25	□	1	Guide ring		
26		1	Air fitting		
27	□	1	Guide ring		

Valve body part

Pos		Qty	Denomination	DN 125	DN 150
14	♦	1	Lip seal, EPDM (standard)		
		1	Lip seal, NBR		
		1	Lip seal, FPM		
Clamp					
15		1	Clamp complete	9611311058	9611311058
Valve body					
17	♦	1	Seal ring, EPDM (standard)	9611992937	9611992937
		1	Seal ring, NBR	9611992938	9611992938
		1	Seal ring, FPM	9611992939	9611992939
18		1	Valve body, 2 ports DIN	9612440501	9612440601
		1	Valve body, 3 ports DIN	9612440502	9612440602
Valve plug					
19		1	Plug, single, complete EPDM (standard)	9612438001	9612438004
		1	Plug, single, complete NBR	9612438002	9612438005
		1	Plug, single, complete FPM	9612438003	9612438006
19a		1	Stem	9612438301	9612438302
19e	♦	1	Plug seal, EPDM (standard)		
		1	Plug seal, NBR		
		1	Plug seal, FPM		
19f		1	Washer	9612438401	9612438401
19g	♦	1	O-ring, EPDM (standard)		
		1	O-ring, NBR		
		1	O-ring, FPM		
19h		1	Screw	9612438701	9612438701

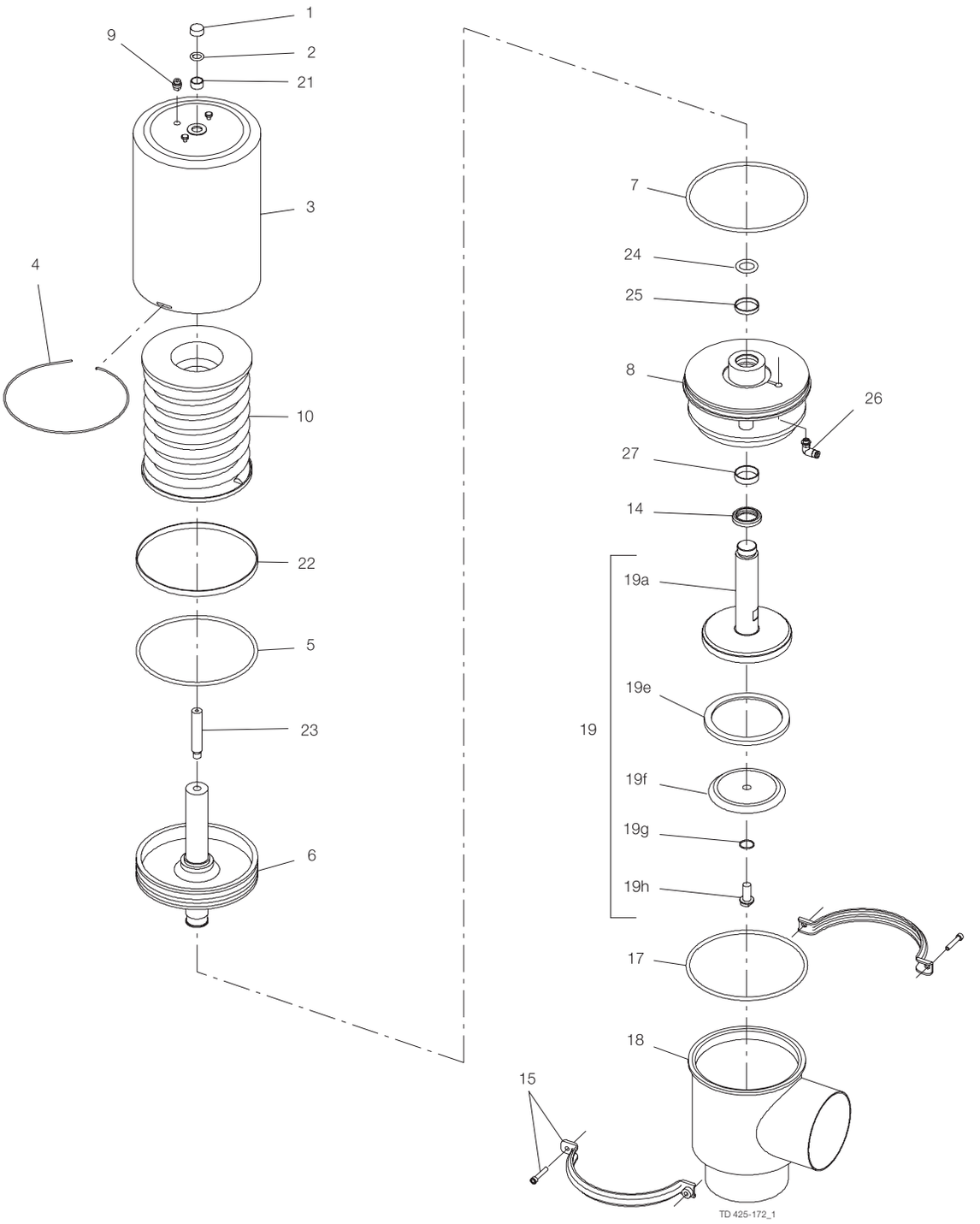
1
9
2
21
3
4
10
22
5
23
6
7
24
25
8
26
27
14
19a
19e
19
19f
19g
19h
17
18
15
TD 425-172_1

Pos	Qty	Denomination	DN 125	DN 150
Valve body - surface roughness, product wetted parts: Ra < 0.8 µm				
18	1	Valve body, 2 ports DIN	9612440503	9612440603
	1	Valve body, 3 ports DIN	9612440504	9612440604
Valve plug - surface roughness, product wetted parts: Ra < 0.8 µm				
19	1	Plug, single, complete EPDM (standard)	9612438007	9612438010
	1	Plug, single, complete NBR	9612438008	9612438011
	1	Plug, single, complete FPM	9612438009	9612438012
19a	1	Stem	3135310076	3135310077
19f	1	Washer	9612438402	9612438402
19h	1	Screw	9612438702	9612438702

		NC	NO
Service kit for actuator			
□	**Service kit EPDM**	9611920296	9611920296

		DN 125	DN 150
Service kit for product wetted parts, standard			
♦	**Service kit EPDM**	9611920355	9611920355
♦	**Service kit NBR**	9611920356	9611920356
♦	**Service kit FPM**	9611920357	9611920357

Parts marked with □♦ are included in the service kits
Recommended spare parts: service kits.

900090/2

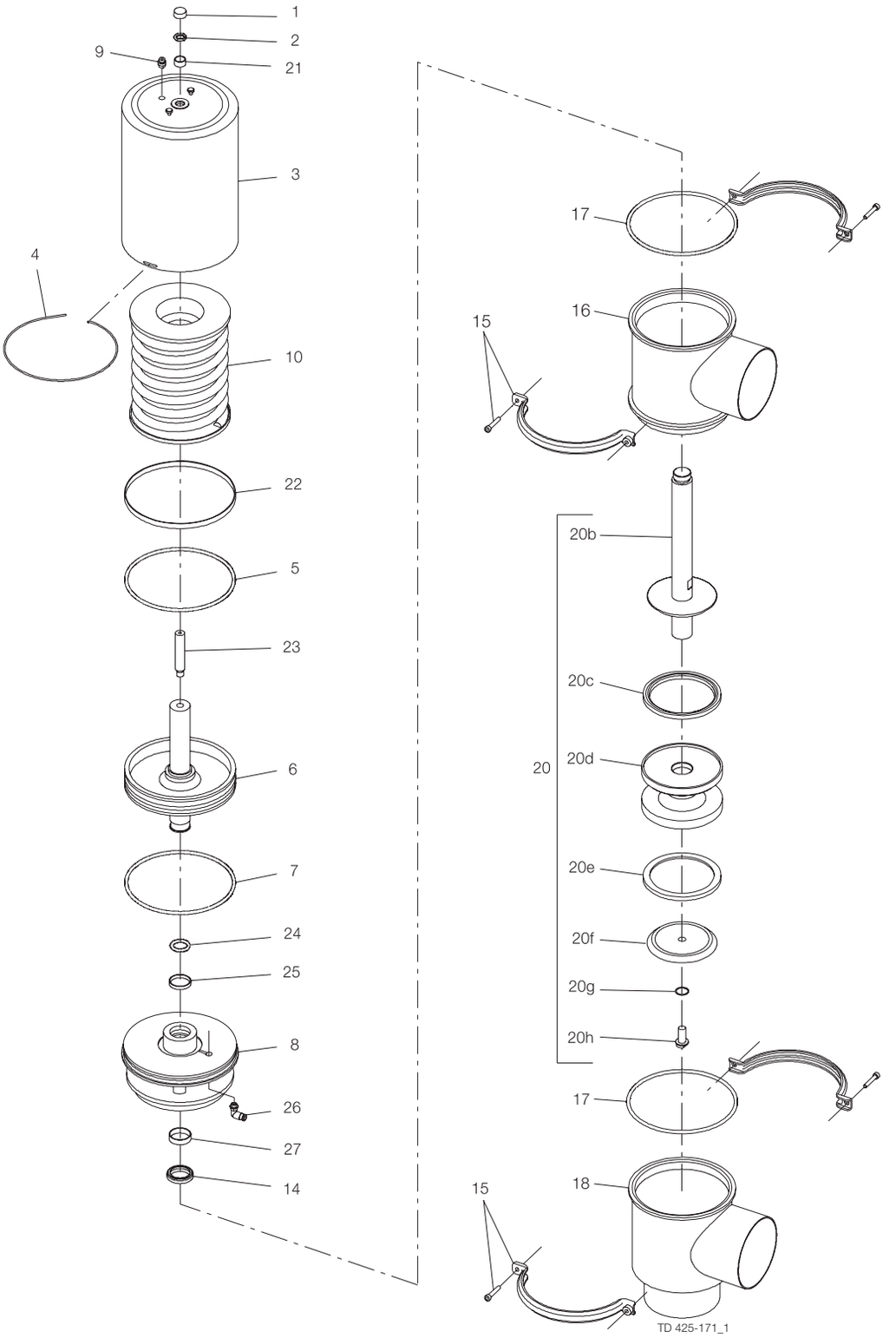
1
2
9
21
3
4
10
22
5
23
6
7
24
25
8
26
27
14
17
16
15
20b
20c
20
20d
20e
20f
20g
20h
17
18
15
TD 425-171_1

Actuator

Pos		Qty	Denomination	NC	NO
			Actuator, complete	9612465701	9612465702
1		1	Cap	9611993060	9611993060
2	□	1	O-ring		
3		1	Cylinder	9612465501	9612465501
4	□	1	Lock wire		
5	□	1	O-ring		
6		1	Piston	9612441101	9612441102
7	□	1	O-ring		
8		1	Bonnet	9612508001	9612508001
9		1	Plug		
10		1	Spring packet	9612441301	9612441301
21	□	1	Guide ring		
22	□	1	Guide ring		
23		1	Top pin	9612440801	9612440801
24	□	1	O-ring		
25	□	1	Guide ring		
26		1	Air fitting	9611991988	9611991988
27	□	1	Guide ring		

Valve body part

Pos		Qty	Denomination	DN 125	DN 150
14	♦	1	Lip seal, EPDM (standard)		
		1	Lip seal, NBR		
		1	Lip seal, FPM		
Clamp					
15		2	Clamp complete	9611311058	9611311058
Valve body					
16		1	Valve body, upper, 1 port DIN	9612457801	9612457901
		1	Valve body, upper, 2 ports DIN	9612457802	9612457902
17	♦	2	Seal ring, EPDM (standard)	9611992937	9611992937
		2	Seal ring, NBR	9611992938	9611992938
		2	Seal ring, FPM	9611992939	9611992939
18		1	Valve body, lower, 2 ports DIN	9612440501	9612440601
		1	Valve body, lower, 3 ports DIN	9612440502	9612440602

Valve plug

Pos		Qty	Denomination	DN 125	DN 150
20		1	Plug, double,complete, EPDM (standard)	9612456601	9612456604
		1	Plug, double,complete, NBR	9612456602	9612456605
		1	Plug, double,complete, FPM	9612456603	9612456606
20b		1	Stem	9612456501	9612456502
20c	♦	1	Plug seal, EPDM (standard)		
		1	Plug seal, NBR		
		1	Plug seal, FPM		
20d		1	Middle piece	9612456301	9612456302
20e	♦	1	Plug seal, EPDM (standard)		
		1	Plug seal, NBR		
		1	Plug seal, FPM		
20f		1	Washer	9612438401	9612438401
20g	♦	1	O-ring, EPDM (standard)		
		1	O-ring, NBR		
		1	O-ring, FPM		
20h		1	Screw	9612438701	9612438701

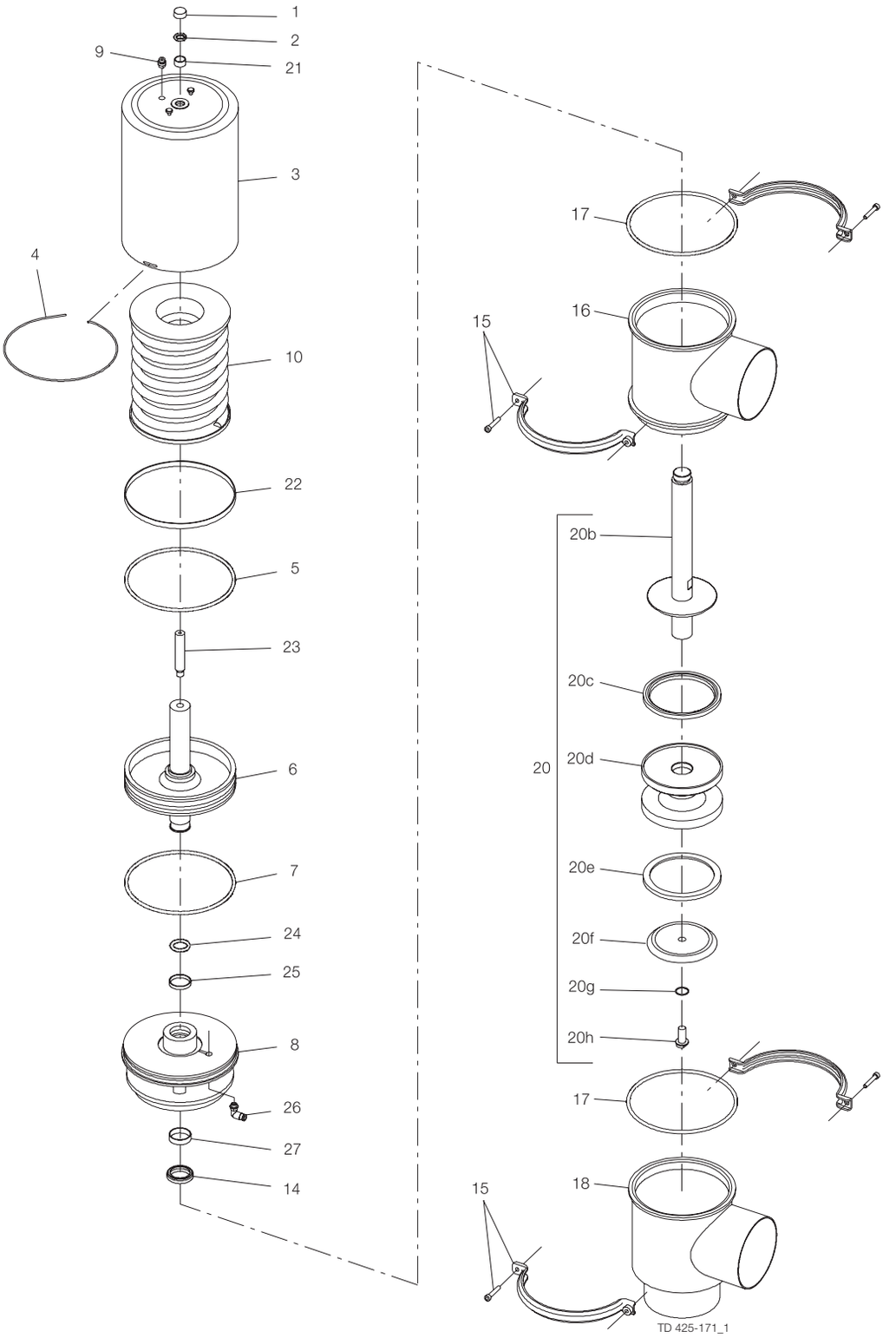
1
2
9
21
3
4
10
22
5
23
6
7
24
25
8
26
27
14
17
16
15
20b
20c
20
20d
20e
20f
20g
20h
17
18
15
TD 425-171_1

Surface roughness, product wetted parts: Ra ≤ 0.8 µm

Pos	Qty	Denomination	DN 125	DN 150
Valve body				
16	1	Valve body, upper, 1 port DIN	9612457803	9612457903
	1	Valve body, upper, 2 ports DIN	9612457804	9612457904
18	1	Valve body, lower, 2 ports DIN	9612440503	9612440603
	1	Valve body, lower, 3 ports DIN	9612440504	9612440604
Valve plug				
20	1	Plug, double,complete, EPDM (standard)	9612456607	9612456610
	1	Plug, double,complete, NBR	9612456608	9612456611
	1	Plug, double,complete, FPM	9612456609	9612456612
20b	1	Stem	3135310086	3135310087
20d	1	Middle piece	9612456303	9612456304
20f	1	Washer	9612438402	9612438402
20h	1	Screw	9612438702	9612438702

			NC	NO
Service kit for actuator				
□		**Service kit EPDM**	**9611920296**	**9611920296**

			DN 125	DN 150
Service kit for product wetted parts				
♦		**Service kit EPDM**	**9611920358**	**9611920358**
♦		**Service kit NBR**	**9611920359**	**9611920359**
♦		**Service kit FPM**	**9611920360**	**9611920360**

Parts marked with □♦ are included in the service kits.
Recommended spare parts: service kits.

900093/4

If the actuator is marked with a danger warning do NOT attempt to cut the actuator open.



Do NOT attempt to disassemble the actuator due to spring under load danger.



Do NOT attempt to cut the actuator open, due to spring under load danger.

AND



Do NOT attempt to cut the actuator open, due to spring under load danger.

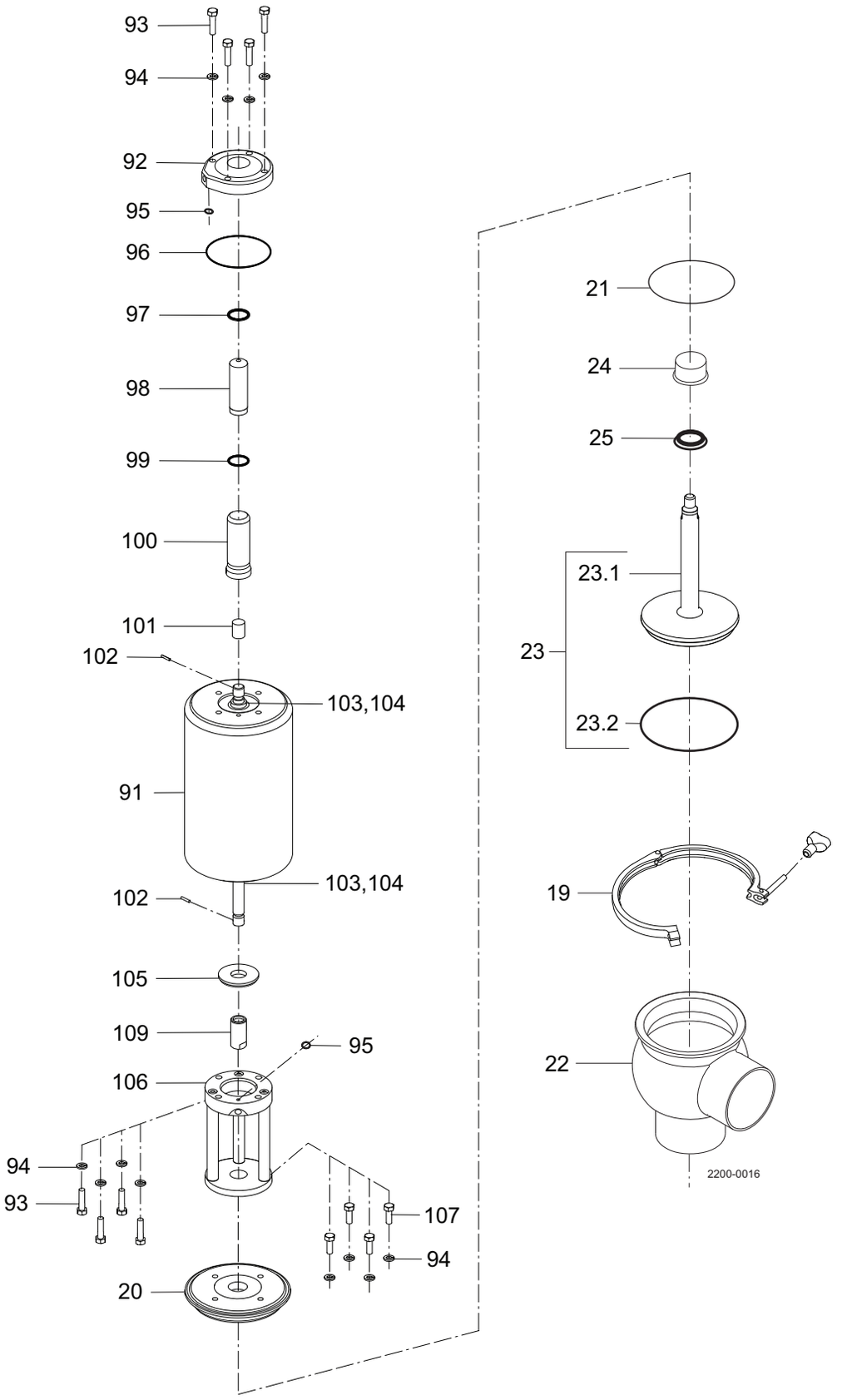

Pos		Qty	Denomination	4”
			Actuator, cpl., (NC and NO)	9634087504
92		1	End cap	751010
93		8	Screw	189723
94		12	Lock washer	189962
95	□	2	O-ring	755388
96	□	1	O-ring	755472
97	□	1	O-ring	755356
98		1	Stem protector	751035
99		1	Stem protector, o-ring	750330
100		1	Stem protector, spacer	751019
101		1	Red cap	750568
102	□	2	Nylon lock pin	750338
103	□	2	Seal retainer	751680
104	□	2	Packing, o-ring	751232
105		1	Retainer, packing	751659
106		1	Yoke	751901
107		4	Screw	189798
108		1	Vent plug (not shown)	181256
109		1	Coupler, stem	9634090101
Clamp				
19		1	Clamp	9612939320
Bonnet				
20		1	Bonnet	9634090001
21	♦	1	O-ring, EPDM (standard)	
	♦	1	O-ring, HNBR	
	♦	1	O-ring, FPM	
		1	O-ring, set (10 pcs.), EPDM	9614059434
		1	O-ring, set (10 pcs.), HNBR	9614059435
		1	O-ring, set (10 pcs.), FPM	9614059436
24		1	Bushing	9613125002
25	♦	1	Lip seal, EPDM (standard)	
	♦	1	Lip seal, HNBR	
	♦	1	Lip seal, FPM	
		1	Lip seal, set (10 pcs.), EPDM	9614059419
		1	Lip seal, set (10 pcs.), HNBR	9614059420
		1	Lip seal, set (10 pcs.), FPM	9614059421
Valve Body				
22		1	Valve body, lower, 2 ports, clamp	9613161611
		1	Valve body, lower, 3 ports, clamp	9613161612
		1	Valve body, lower, 2 ports, welding ends	9313139523
		1	Valve body, lower, 3 ports, welding ends	9613139524
Valve Plug				
23		1	Plug, shut off, complete, EPDM (standard)	9614206601
		1	Plug, shut off, complete, HNBR	9614206603
		1	Plug, shut off, complete, FPM	9614206605
23.1		1	Plug, shut off	9634090301
23.2	♦	1	Plug seal, EPDM (standard)	
	♦	1	Plug seal, HNBR	
	♦	1	Plug seal, FPM	
		1	Plug seal, set (10 pcs.), EPDM	9614059416
		1	Plug seal, set (10 pcs.), HNBR	9614059417
		1	Plug seal, set (10 pcs.), FPM	9614059418

Service kits

		4”
□	**Service kit, actuator**	**9611926957**
♦	**Service kit, EPDM**	**9611926506**
♦	**Service kit, HNBR**	**9611926512**
♦	**Service kit, FPM**	**9611926518**

Recommended spare parts: Service kits.
Parts marked with □♦ are included in the service kits

If the actuator is marked with a danger warning do NOT attempt to cut the actuator open.



Do NOT attempt to disassemble the actuator due to spring under load danger.



Do NOT attempt to cut the actuator open, due to spring under load danger.

AND



Do NOT attempt to cut the actuator open, due to spring under load danger.

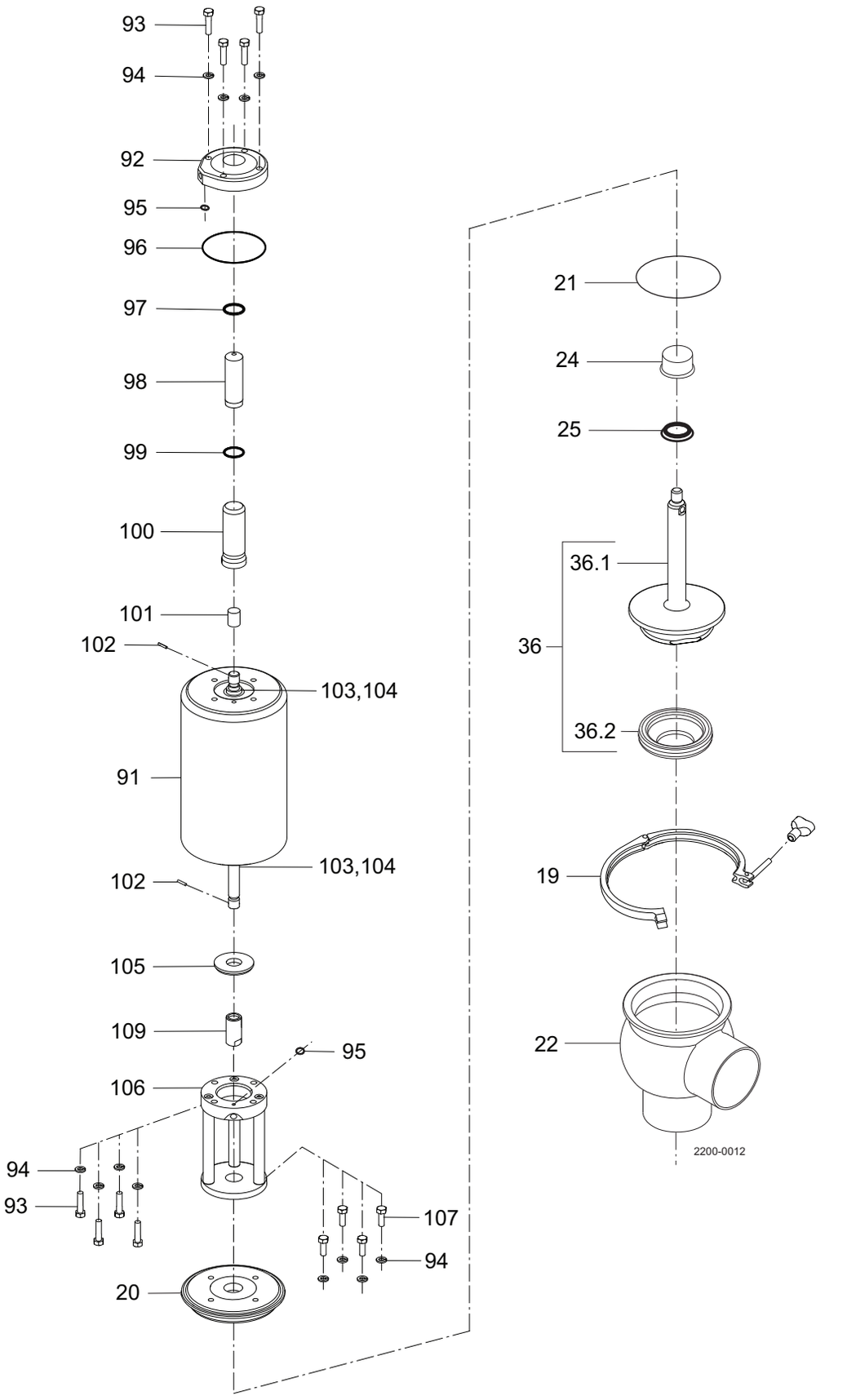

Pos		Qty	Denomination	4”
			Actuator, complete (NC & NO)	9634087504
92		1	End cap	751010
93		8	Screw	189723
94		12	Lock washer	189962
95	□	2	O-ring	755388
96	□	1	O-ring	755472
97	□	1	O-ring	755356
98		1	Stem protector	751035
99		1	Stem protector, o-ring	750330
100		1	Stem protector, spacer	751019
101		1	Red cap	750568
102	□	2	Nylon lock pin	750338
103	□	2	Seal retainer	751680
104	□	2	Packing, o-ring	751232
105		1	Retainer, packing	751659
106		1	Yoke	751901
107		4	Screw	189798
108		1	Vent plug (not shown)	181256
109		1	Coupler, stem	9634090101
Clamp				
19		1	Clamp	9612939320
Bonnet				
20		1	Bonnet	9634090001
21	♦	1	O-ring, EPDM (standard)	
	♦	1	O-ring, HNBR	
	♦	1	O-ring, FPM	
		1	O-ring, set (10 pcs.), EPDM	9614059434
		1	O-ring, set (10 pcs.), HNBR	9614059435
		1	O-ring, set (10 pcs.), FPM	9614059436
24		1	Bushing	9613125002
25	♦	1	Lip seal, EPDM (standard)	
	♦	1	Lip seal, HNBR	
	♦	1	Lip seal, FPM	
		1	Lip seal, set (10 pcs.), EPDM	9614059419
		1	Lip seal, set (10 pcs.), HNBR	9614059420
		1	Lip seal, set (10 pcs.), FPM	9614059421
Valve Body				
22		1	Valve body, lower, 2 ports, clamp	9613161611
		1	Valve body, lower, 3 ports, clamp	9613161612
		1	Valve body, lower, 2 ports, welding ends	9613139523
		1	Valve body, lower, 3 ports, welding ends	9613139524
Valve Plug				
36		1	Plug, shut off, complete	9614206701
36.1		1	Plug, shut off	9634090201
36.2	♦	1	Plug seal, PTFE	
		1	Plug seal, set (10 pcs.), PTFE	9614059453

Service kits

		4”
□	**Service kit, actuator**	**9611926957**
♦	**Service kit, EPDM**	**9611926565**
♦	**Service kit, HNBR**	**9611926570**
♦	**Service kit, FPM**	**9611926575**

Recommended spare parts: Service kits

Parts marked with □♦ are included in the service kits

TD 900-643

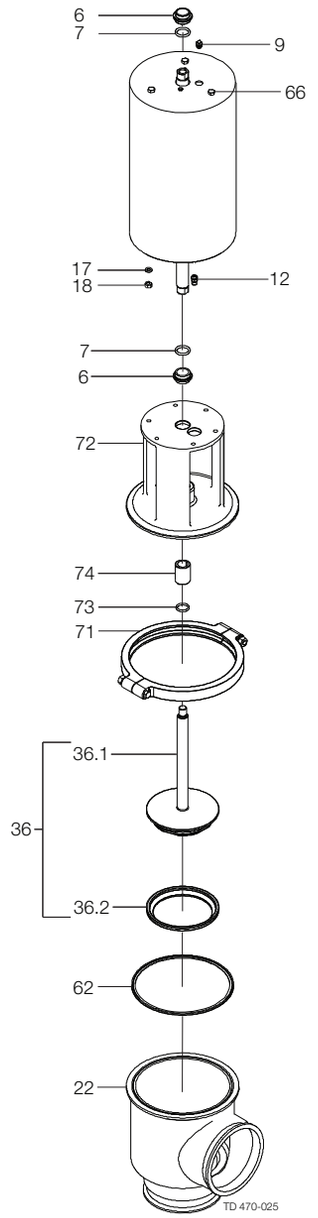
6
7
9
66
17
18
12
7
6
72
74
73
71
36.1
36
36.2
62
22
TD 470-025

Pos		Qty	Denomination	6"
			Actuator, complete (NO)	9613463610
			Actuator, complete (NC)	9613463612
6		2	Bushing	9613462901
7		2	O-ring	9611994898
9		1	Plug	96134141-01
12		1	Air fitting	9634081459
66		3	Screw	9611991686
Yoke				
72		1	Yoke	9613463201
17		6	Washer	9611991888
18		6	Nut	9611990360
69		6	Pin bolt	9611993618
73	□	1	O-ring, EPDM	751956
	□	1	O-ring, SFY	751957
	□	1	O-ring, Buna	755452
74		1	Bushing	762507
Clamp				
71		1	Clamp	752068
62		1	Gasket, Buna	9634055798
		1	Gasket, EPDM	752055
Valve Body				
22		1	Valve body, 2 ports, clamp	9634052061
		1	Valve body, 3 ports, clamp	9634052202
		1	Valve body, 3 ports, clamp, inlet port weld	9634053181
		1	Valve body, 3 ports, clamp, 1 port and inlet port weld	9634052522
		1	Valve body, 2 ports, weld	9634052520
		1	Valve body, 3 ports, weld	9634052521
Valve body Tangential				
		1	Valve body, right, 2 ports, clamp	9634052220
		1	Valve body, left, 2 ports, clamp	9634052219
		1	Valve body, 3 ports, clamp	9634052217
		1	Valve body, 3 ports, clamp, right port and inlet port weld	9634052951
		1	Valve body, right, 2 ports, weld	773022
		1	Valve body, left, 2 ports, weld	773019
		1	Valve body, 3 ports, weld	773018
Valve plug				
36		1	Plug TR2, complete	9613463701
36.1		1	Plug TR2,	9613463801
36.2	□	1	Plug seal TR2, PTFE	9634054811

	6"
Service kit, EPDM	□ 9611926839
Service kit, SFY/EPDM	□ 9611926840
Service kit, Buna	□ 9611926841

Parts marked with □ are included in the service kits (product wetted parts)

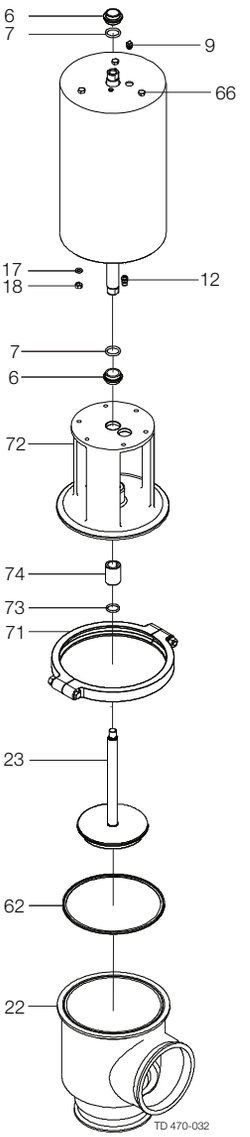
6
7
9
66
17
18
12
7
6
72
74
73
71
23
62
22
TD 470-032

Pos		Qty	Denomination	6"
			Actuator, complete (NO)	9613463610
			Actuator, complete (NC)	9613463612
6		2	Bushing	9613462901
7		2	O-ring	9611994898
9		1	Plug	96134141-01
12		1	Air fitting	9634081459
66		3	Screw	9611991686
Yoke				
72		1	Yoke	9613463201
17		6	Washer	9611991888
18		6	Nut	9611990360
69		6	Pin bolt	9611993618
73	□	1	O-ring, EPDM	751956
	□	1	O-ring, SFY	751957
	□	1	O-ring, Buna	755452
74		1	Bushing	762507
Clamp				
71		1	Clamp	752068
62	□	1	Gasket, Buna	9634055798
	□	1	Gasket, EPDM	752055
Valve body				
22		1	Valve body, 2 ports, clamp	9634052061
		1	Valve body, 3 ports, clamp	9634052202
		1	Valve body, 3 ports, clamp, inlet port weld	9634053181
		1	Valve body, 3 ports, clamp, 1 port and inlet port weld	9634052522
		1	Valve body, 2 ports, weld	9634052520
		1	Valve body, 3 ports, weld	9634052521
Valve body Tangential				
		1	Valve body, right, 2 ports, clamp	9634052220
		1	Valve body, left, 2 ports, clamp	9634052219
		1	Valve body, 3 ports, clamp	9634052217
		1	Valve body, 3 ports, clamp, right port and inlet port weld	9634052951
		1	Valve body, right, 2 ports, weld	773022
		1	Valve body, left, 2 ports, weld	773019
		1	Valve body, 3 ports, weld	773018
Valve Plug				
23		1	LP Plug, complete, EPDM	9613464001
		1	LP Plug, complete, SFY	9613464002
		1	LP Plug, complete, Buna	9613464003

	6"
Service kit, EPDM	□ 9611926842
Service kit, SFY/EPDM	□ 9611926843
Service kit, Buna	□ 9611926844

Parts marked with □ are included in the service kits (product wetted parts)

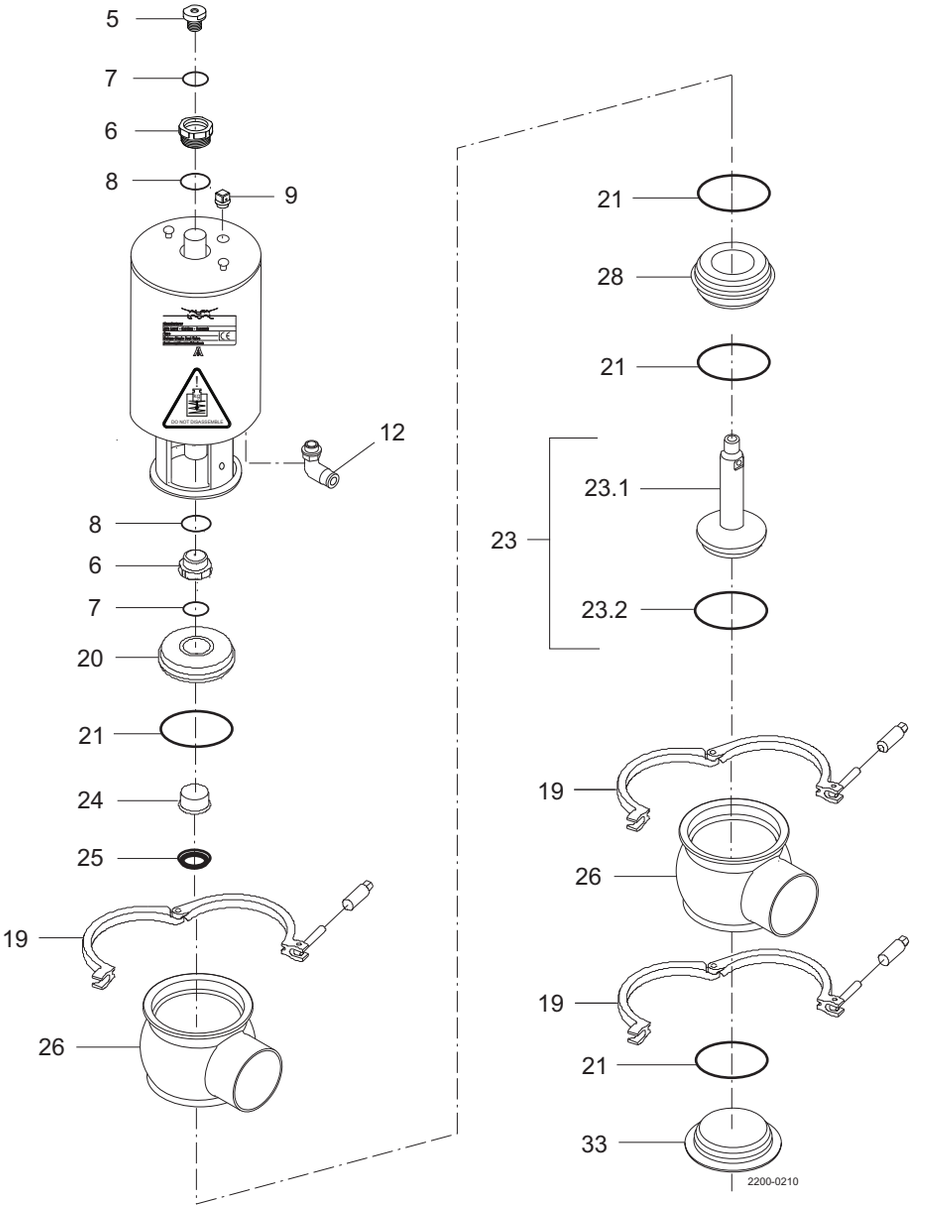
5
7
6
8
9
12
8
6
7
20
21
24
25
19
26
21
28
21
23
23.1
23.2
19
26
19
21
33
2200-0210

Pos		Qty	Denomination	DN25 25 mm	DN40 38 mm	DN50 51 mm	DN65 63.5 mm	DN80 76.1 mm	DN100 101.6 mm
			Actuator, complete , (NO) .	9613154801	9613154801	9613154802	9613154803	9613154804	9613154805
			Actuator, complete, (NC) . .	9613154806	9613154806	9613154807	9613154808	9613154809	9613154810
			Actuator, complete (A/A), (A/A)	9613154811	9613154811	9613154812	9613154813	9613154814	9613154815
5		1	Adapter, plastic (- 0115) . .						
		1	Adapter, steel (0115 - 0518)						
		1	Adapter, steel (0518 -) . . .	9615374701	9615374701	9615374701	9615374701	9615374701	9615374701
6	•	2	Bushing						
7	•	2	O-ring						
8	•	2	O-ring						
9		1	Plug	9613414101	9613414101	9613414101	9613414101	9613414101	9613414101
12		1(2)	Air fitting	9611991988	9611991988	9611991988	9611991988	9611991988	9611991988
Valve body part									
Sealing element									
20		1	Sealing element	9613127102	9613127102	9613127103	9613127104	9613127105	9613127106
21	Δ	2	O-ring, EPDM (standard) . .						
		2	O-ring, NBR						
		2	O-ring, FPM						
			O-ring, set (10 pcs.) EPDM	9614059422	9614059422	9614059425	9614059428	9614059431	9614059434
			O-ring, set (10 pcs.) HNBR	9614059423	9614059423	9614059426	9614059429	9614059432	9614059435
			O-ring, set (10 pcs.) FPM .	9614059424	9614059424	9614059427	9614059430	9614059433	9614059436
24		1	Bearing	9613125001	9613125001	9613125001	9613125001	9613125001	9613125001
25	Δ	1	Lip seal, EPDM (standard) .						
		1	Lip seal, NBR						
		1	Lip seal, FPM						
			Lip seal, set (10 pcs.) EPDM	9614059419	9614059419	9614059419	9614059419	9614059419	9614059419
			Lip seal, set (10 pcs.) HNBR	9614059420	9614059420	9614059420	9614059420	9614059420	9614059420
			Lip seal, set (10 pcs.) FPM	9614059421	9614059421	9614059421	9614059421	9614059421	9614059421
33		1	Lower bonnet						
Seat									
21		2	O-ring, EPDM (standard) . .						
		2	O-ring, NBR						
		2	O-ring, FPM						
			O-ring, set (10 pcs.) EPDM	9614059422	9614059422	9614059425	9614059428	9614059431	9614059434
			O-ring, set (10 pcs.) HNBR	9614059423	9614059423	9614059426	9614059429	9614059432	9614059435
			O-ring, set (10 pcs.) FPM .	9614059424	9614059424	9614059427	9614059430	9614059433	9614059436
28		1	Seat	9613127501	9613127502	9613127503	9613127504	9613127505	9613127506
Clamp									
19		3	Clamp	9612939303	9612939303	9612939304	9612939305	9612939306	9612939307
Valve body									
26		2	Valve body, upper, 1 port ISO	9613139301	9613139303	9613139305	9613139307	9613139309	9613139311
		2	Valve body, upper, 1 port DIN	9613139401	9613139403	9613139405	9613139407	9613139409	9613139411
		2	Valve body, upper, 2 ports ISO	9613139302	9613139304	9613139306	9613139308	9613139310	9613139312
		2	Valve body, upper, 2 ports DIN	9613139402	9613139404	9613139406	9613139408	9613139410	9613139412

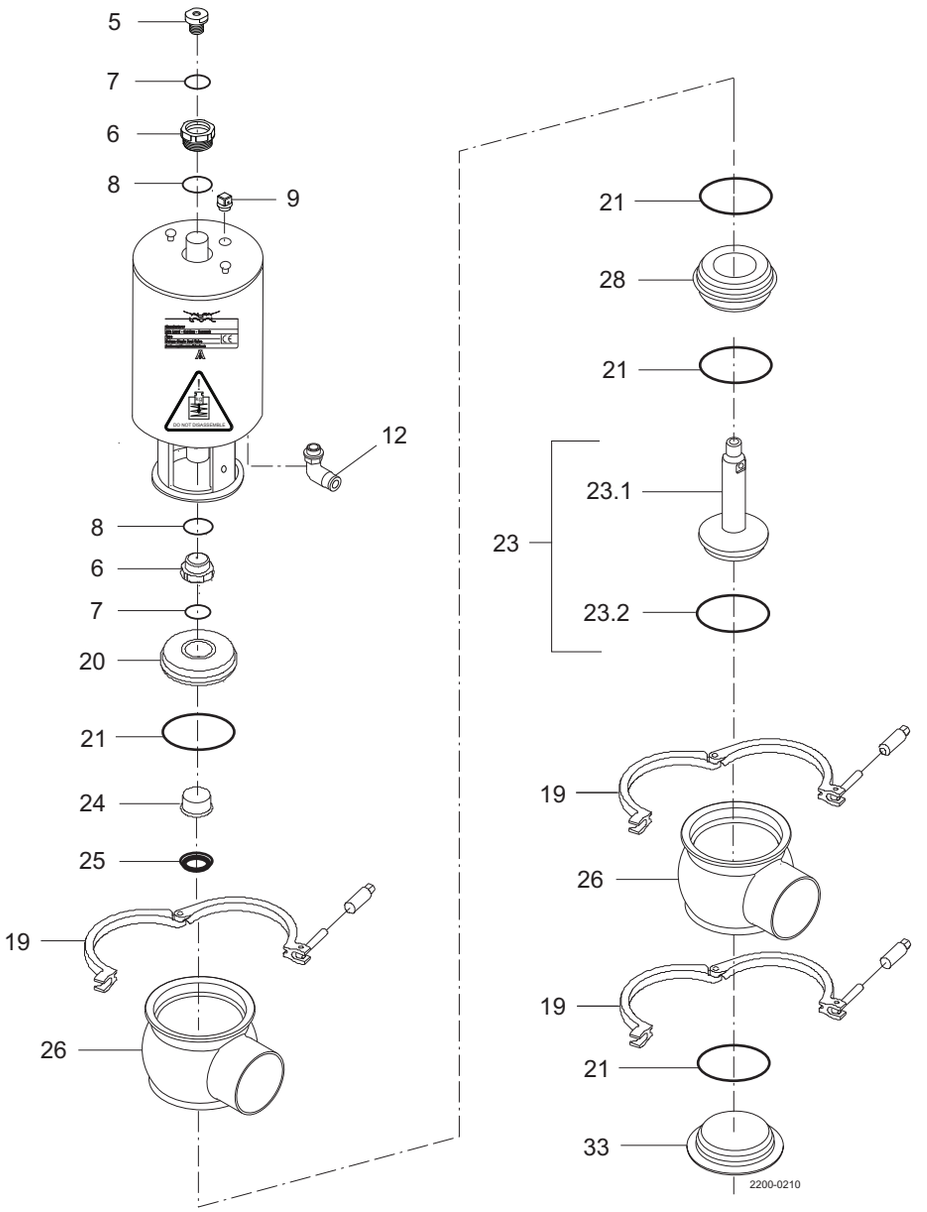
5
7
6
8
9
12
8
6
7
20
21
24
25
19
26
21
28
21
23
23.1
23.2
19
26
19
21
33
2200-0210

Pos	Qty	Denomination	DN25 25 mm	DN40 38 mm	DN50 51 mm	DN65 63.5 mm	DN80 76.1 mm	DN100 101.6 mm
Valve plug								
23	1	Plug, shut off, ISO, complete, EPDM (standard)	9613138801	9613138802	9613138803	9613138804	9613138805	9613138806
	1	Plug, shut off, ISO, complete, HNBR	9613138813	9613138814	9613138815	9613138816	9613138817	9613138818
	1	Plug, shut off, ISO, complete, FPM	9613138825	9613138826	9613138827	9613138828	9613138829	9613138830
	1	Plug, shut off, DIN, complete, EPDM (standard)	9613138807	9613138808	9613138809	9613138810	9613138811	9613138812
	1	Plug, shut off, DIN, complete, HNBR	9613138819	9613138820	9613138821	9613138822	9613138823	9613138824
	1	Plug, shut off, DIN, complete, FPM	9613138831	9613138832	9613138833	9613138834	9613138835	9613138836
23.1	1	Plug, shut off, ISO	9613149601	9613139802	9613139803	9613139804	9613139805	9613139806
	1	Plug, shut off, DIN	9613149602	9613139808	9613139809	9613139810	9613139811	9613139812
23.2Δ	1	Plug seal, EPDM (standard)						
	1	Plug seal, HNBR						
	1	Plug seal, FPM						
		Plug seal, set (10 pcs.) EPDM	9614059401	9614059404	9614059407	9614059410	9614059413	9614059416
		Plug seal, set (10 pcs.) HNBR	9614059402	9614059405	9614059408	9614059411	9614059414	9614059417
		Plug seal, set (10 pcs.) FPM	9614059403	9614059406	9614059409	9614059412	9614059415	9614059418
Valve body with finish outside RA 0.8								
26	2	Valve body, upper, 1 port ISO	9613139313	9613139315	9613139317	9613139319	9613139321	9613139323
	2	Valve body, upper, 1 port DIN	9613139413	9613139415	9613139417	9613139419	9613139421	9613139423
	2	Valve body, upper, 2 ports ISO	9613139314	9613139316	9613139318	9613139320	9613139322	9613139324
	2	Valve body, upper, 2 ports DIN	9613139414	9613139416	9613139418	9613139420	9613139422	9613139424

Parts marked with ● are included in the service kits (actuator)
Parts marked with Δ are included in the service kits (product wetted parts)
Tool for bushing (pos. 24) item no.: 9613160901
Recommended spare parts: Service kits.

TD900735-1

Service kits

		DN25 25 mm	DN40 38 mm	DN50 51 mm	DN65 63.5 mm	DN80 76.1 mm	DN100 101.6 mm
●	**Service kit, actuator**	**9611926500**	**9611926500**	**9611926500**	**9611926500**	**9611926500**	**9611926500**
Δ	**Service kit, EPDM**	**9611926501**	**9611926502**	**9611926503**	**9611926504**	**9611926505**	**9611926506**
Δ	**Service kit, HNBR**	**9611926507**	**9611926508**	**9611926509**	**9611926510**	**9611926511**	**9611926512**
Δ	**Service kit, FPM**	**9611926513**	**9611926514**	**9611926515**	**9611926516**	**9611926517**	**9611926518**

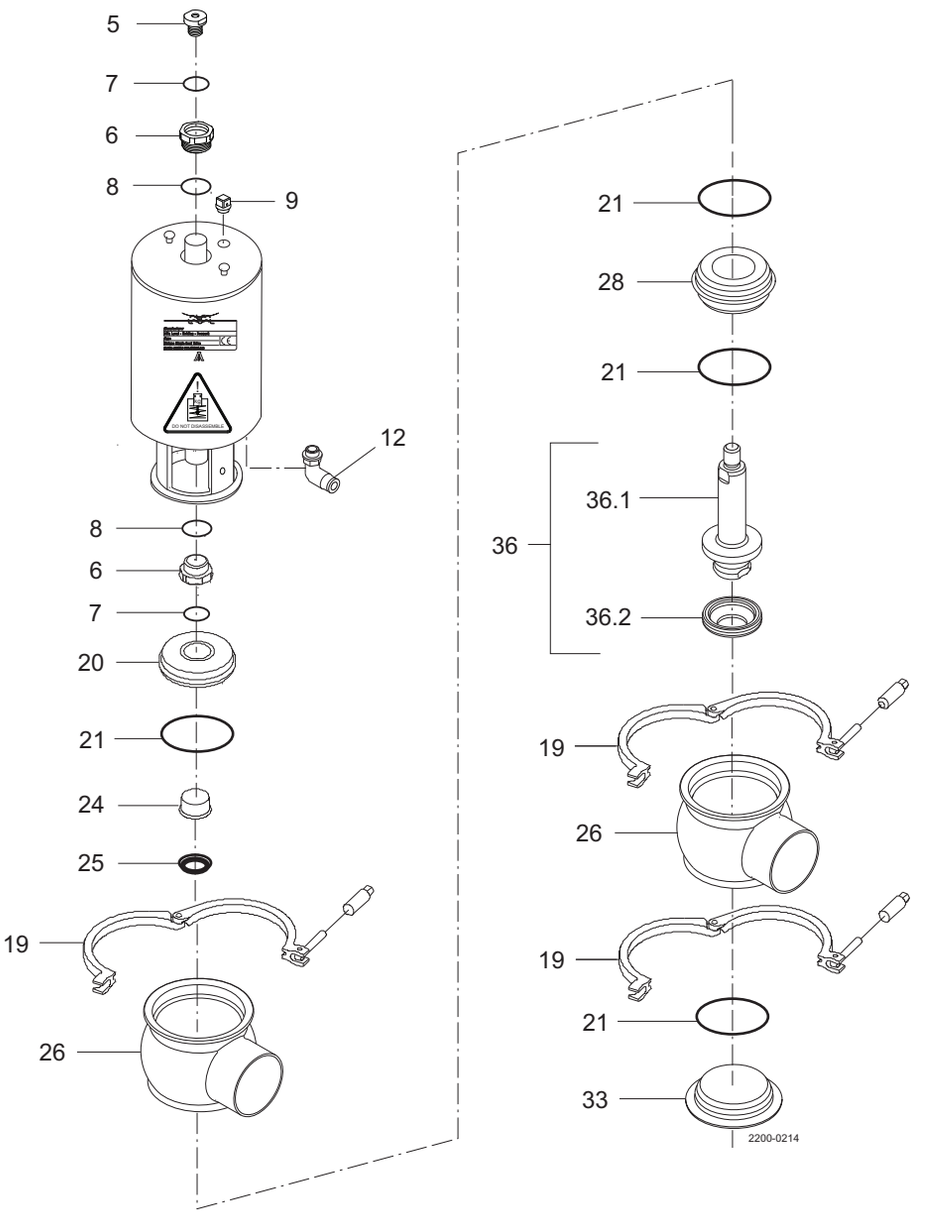
5
7
6
8
9
12
8
6
7
20
21
24
25
19
26
21
28
21
36
36.1
36.2
19
26
19
21
33
2200-0214

Pos		Qty	Denomination	DN25 25 mm	DN40 38 mm	DN50 51 mm	DN65 63.5 mm	DN80 76.1 mm	DN100 101.6 mm
			Actuator, complete (NO) . .	9613154801	9613154801	9613154802	9613154803	9613154804	9613154805
			Actuator, complete (NC) . .	9613154806	9613154806	9613154807	9613154808	9613154809	9613154810
			Actuator, complete (A/A) . .	9613154811	9613154811	9613154812	9613154813	9613154814	9613154815
5		1	Adapter, plastic (- 0115) . .						
		1	Adapter, steel (0115 - 0518)						
		1	Adapter, steel (0518 -) . . .	9615374701	9615374701	9615374701	9615374701	9615374701	9615374701
6	□	2	Bushing						
7	□	2	O-ring						
8	□	2	O-ring						
9		1	Plug	9613414101	9613414101	9613414101	9613414101	9613414101	9613414101
12		1(2)	Air fitting	9611991988	9611991988	9611991988	9611991988	9611991988	9611991988
Valve body parts									
Sealing element									
20		1	Sealing element	9613127102	9613127102	9613127103	9613127104	9613127105	9613127106
21	Δ	2	O-ring, EPDM (standard) . .						
		2	O-ring, NBR						
		2	O-ring, FPM						
			O-ring, set (10 pcs.) EPDM	9614059422	9614059422	9614059425	9614059428	9614059431	9614059434
			O-ring, set (10 pcs.) HNBR	9614059423	9614059423	9614059426	9614059429	9614059432	9614059435
			O-ring, set (10 pcs.) FPM .	9614059424	9614059424	9614059427	9614059430	9614059433	9614059436
24		1	Bearing	9613125001	9613125001	9613125001	9613125001	9613125001	9613125001
25	Δ	1	Lip seal, EPDM (standard) .						
		1	Lip seal, NBR						
		1	Lip seal, FPM						
			Lip seal, set (10 pcs.) EPDM	9614059419	9614059419	9614059419	9614059419	9614059419	9614059419
		1	Lip seal, set (10 pcs.) HNBR	9614059420	9614059420	9614059420	9614059420	9614059420	9614059420
			Lip seal, set (10 pcs.) FPM	9614059421	9614059421	9614059421	9614059421	9614059421	9614059421
33		1	Lower bonnet	9613130102	9613130102	9613130103	9613130104	9613130105	9613130106
Seat									
21	Δ	2	O-ring, EPDM (standard) . .						
		2	O-ring, NBR						
		2	O-ring, FPM						
			O-ring, set (10 pcs.) EPDM	9614059422	9614059422	9614059425	9614059428	9614059431	9614059434
			O-ring, set (10 pcs.) HNBR	9614059423	9614059423	9614059426	9614059429	9614059432	9614059435
			O-ring, set (10 pcs.) FPM .	9614059424	9614059424	9614059427	9614059430	9614059433	9614059436
28		1	Seat	9613127501	9613127502	9613127503	9613127504	9613127505	9613127506
Clamp									
19		3	Clamp	9612939303	9612939303	9612939304	9612939305	9612939306	9612939307
Valve body									
26		2	Valve body, upper, 1 port ISO	9613139301	9613139303	9613139305	9613139307	9613139309	9613139311
		2	Valve body, upper, 1 port DIN	9613139401	9613139403	9613139405	9613139407	9613139409	9613139411
		2	Valve body, upper, 2 ports ISO	9613139302	9613139304	9613139306	9613139308	9613139310	9613139312
		2	Valve body, upper, 2 ports DIN	9613139402	9613139404	9613139406	9613139408	9613139410	9613139412
Valve plug									
36		1	Plug, shut off, complete . .	9613155801	9613155802	9613155803	9613155804	9613155805	9613155806
36.1		1	Plug, shut off, ...	9613147301	9613151101	9613151102	9613151103	9613151104	9613151105
36.2	Δ	1	Plug seal, PTFE						
			Plug seal, set (10 pcs.) PTFE	9614059448	9614059449	9614059450	9614059451	9614059452	9614059453

Parts marked with □ are included in the service kits (actuator).

Parts marked with Δ are included in the service kits. (product wetted parts)

Recommended spare parts: Service kits.

TD700736/-2

Service kits

		DN25 25 mm	DN40 38 mm	DN50 51 mm	DN65 63.5 mm	DN80 76.1 mm	DN100 101.6 mm
□	**Service kit, actuator . . . .**	**9611926500**	**9611926500**	**9611926500**	**9611926500**	**9611926500**	**9611926500**
Δ	**Service kit, EPDM . . . . . .**	**8010014728**	**9611926648**	**9611926649**	**9611926650**	**9611926651**	**9611926652**
Δ	**Service kit, HNBR . . . . . .**	**8010014729**	**9611926653**	**9611926654**	**9611926655**	**9611926656**	**9611926657**
Δ	**Service kit, FPM . . . . . .**	**8010014730**	**9611926658**	**9611926659**	**9611926660**	**9611926661**	**9611926662**

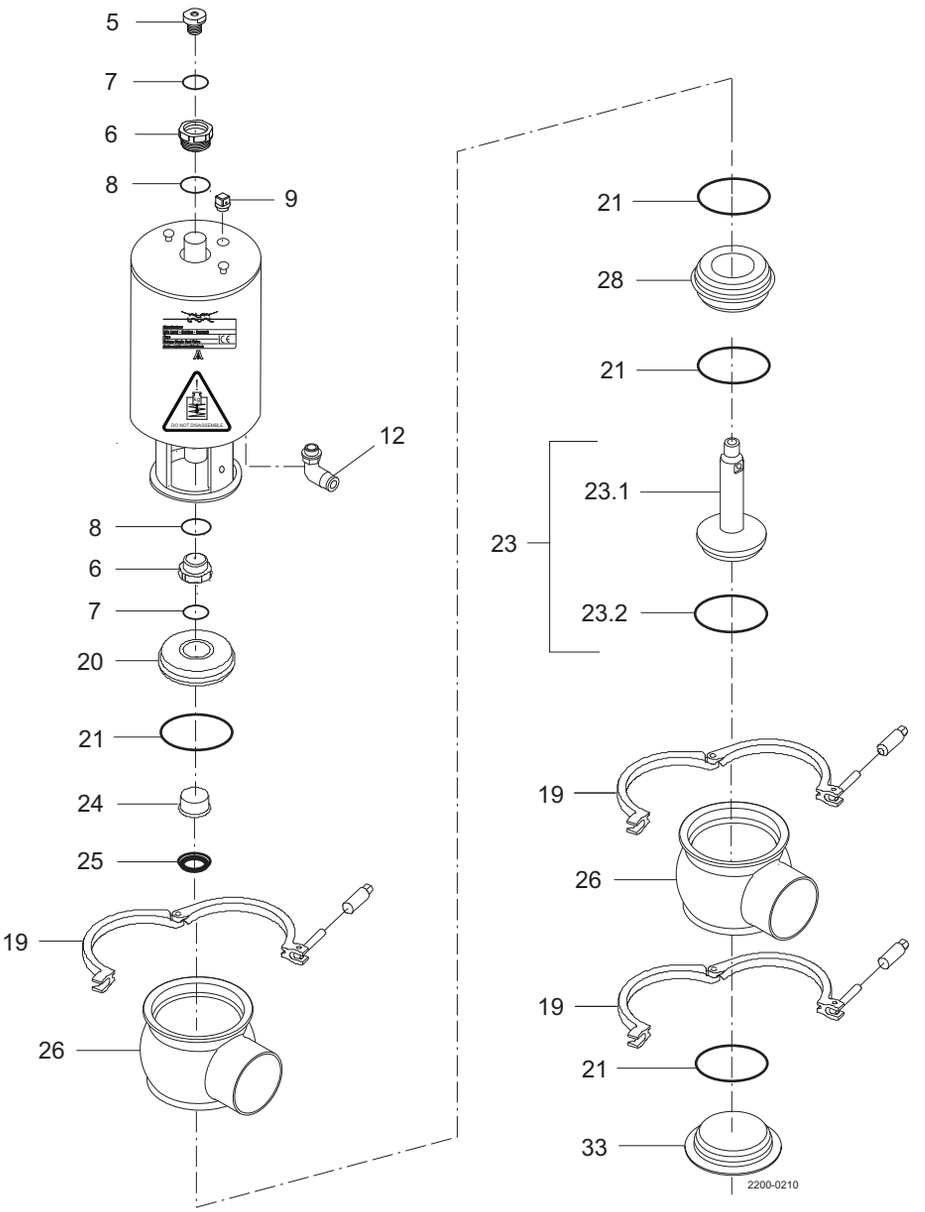
5
7
6
8
9
12
8
6
7
20
21
24
25
19
26
21
28
21
23
23.1
23.2
19
26
19
21
33
2200-0210

Pos		Qty	Denomination	DN25 25 mm	DN40 38 mm	DN50 51 mm	DN65 63.5 mm	DN80 76.1 mm	DN100 101.6mm
			Actuator, complete (NO-RA)	9613154836	9613154837	9613154838	9613154839	9613154840	9613154805
			Actuator, complete (NC-RA)	9613154831	9613154832	9613154833	9613154834	9613154835	9613154810
			Actuator, complete (A/A)	9613154841	9613154842	9613154843	9613154844	9613154845	9613154815
5		1	Adapter, plastic (- 0115)						
		1	Adapter, steel (0115 - 0518)						
		1	Adapter, steel (0518 -)	9615374701	9615374701	9615374701	9615374701	9615374701	9615374701
6	●	2	Bushing						
7	●	2	O-ring						
8	●	2	O-ring						
9		1	Plug	9613414101	9613414101	9613414101	9613414101	9613414101	9613414101
12		1(2)	Air fitting	9611994682	9611994682	9611994682	9611994682	9611994682	9611991988
Valve Body Part									
Sealing Element									
20		1	Sealing element	9613127102	9613127102	9613127103	9613127104	9613127105	9613127106
21	Δ	2	O-ring, EPDM (standard)						
		2	O-ring, NBR						
		2	O-ring, FPM						
			O-ring, set (10 pcs.) EPDM	9614059422	9614059422	9614059425	9614059428	9614059431	9614059434
			O-ring, set (10 pcs.) HNBR	9614059423	9614059423	9614059426	9614059429	9614059432	9614059435
			O-ring, set (10 pcs.) FPM	9614059424	9614059424	9614059427	9614059430	9614059433	9614059436
24		1	Bearing	9613125001	9613125001	9613125001	9613125001	9613125001	9613125001
25	Δ	1	Lip seal, EPDM (standard)						
		1	Lip seal, NBR						
		1	Lip seal, FPM						
			Lip seal, set (10 pcs.) EPDM	9614059419	9614059419	9614059419	9614059419	9614059419	9614059419
			Lip seal, set (10 pcs.) HNBR	9614059420	9614059420	9614059420	9614059420	9614059420	9614059420
			Lip seal, set (10 pcs.) FPM	9614059421	9614059421	9614059421	9614059421	9614059421	9614059421
33		1	Lower bonnet	9613130102	9613130102	9613130103	9613130104	9613130105	9613130106
Seat									
21		2	O-ring, EPDM (standard)						
		2	O-ring, NBR						
		2	O-ring, FPM						
			O-ring, set (10 pcs.) EPDM	9614059422	9614059422	9614059425	9614059428	9614059431	9614059434
			O-ring, set (10 pcs.) HNBR	9614059423	9614059423	9614059426	9614059429	9614059432	9614059435
			O-ring, set (10 pcs.) FPM	9614059424	9614059424	9614059427	9614059430	9614059433	9614059436
28		1	Seat	9613127501	9613127502	9613127503	9613127504	9613127505	9613127506
Clamp									
19		3	Clamp	9612939303	9612939303	9612939304	9612939305	9612939306	9612939307
Valve Body									
26		2	Valve body, upper, 1 ports, clamp	9613161501	9613161503	9613161505	9613161507	9613161509	9613161511
		2	Valve body, upper, 2 ports, clamp	9613161502	9613161504	9613161506	9613161508	9613161510	9613161512
		2	Valve body, upper, 1 ports, welding ends	9613139313	9613139315	9613139317	9613139319	9613139321	9613139323
		2	Valve body, upper, 2 ports, welding ends	9613139314	9613139316	9613139318	9613139320	9613139322	9613139324
Valve Plug									
23		1	Plug, shut off, ISO, complete, EPDM (standard)	9613138801	9613138802	9613138803	9613138804	9613138805	9613138806
		1	Plug, shut off, ISO, complete, HNBR	9613138813	9613138814	9613138815	9613138816	9613138817	9613138818
		1	Plug, shut off, ISO, complete, FPM	9613138825	9613138826	9613138827	9613138828	9613138829	9613138830
23.1		1	Plug, shut off, ISO	9613149601	9613139802	9613139803	9613139804	9613139805	9613139806
23.2	Δ	1	Plug seal, EPDM (standard)						
		1	Plug seal, HNBR						
		1	Plug seal, FPM						
			Plug seal, set (10 pcs.) EPDM	9614059401	9614059404	9614059407	9614059410	9614059413	9614059416
			Plug seal, set (10 pcs.) HNBR	9614059402	9614059405	9614059408	9614059411	9614059414	9614059417
			Plug seal, set (10 pcs.) FPM	9614059403	9614059406	9614059409	9614059412	9614059415	9614059418

Parts marked with ● are included in the service kits (actuator)

Parts marked with Δ are included in the service kits (product wetted parts)

Tool for bushing (pos. 24) 9613160901

Recommended spare parts: Service kits.

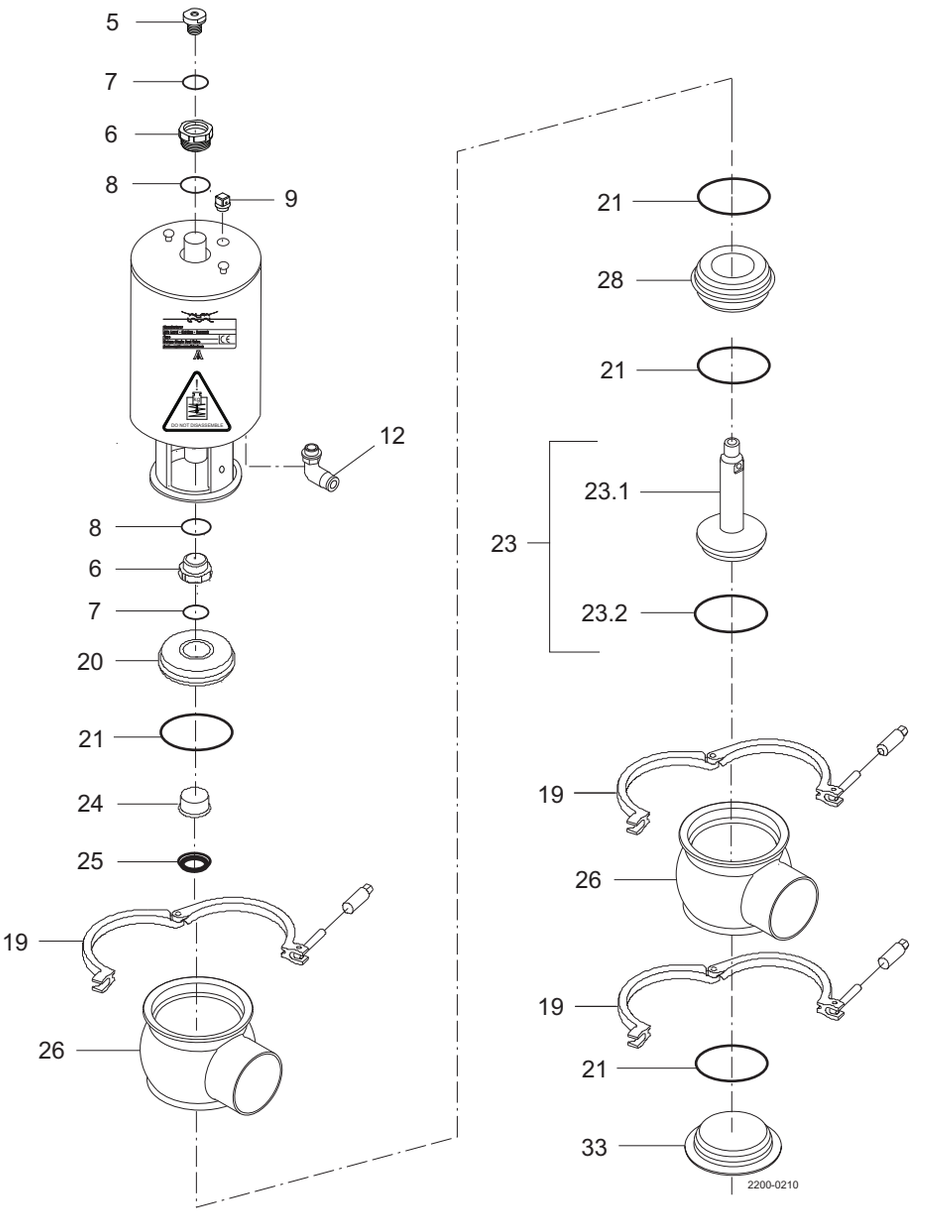
5
7
6
8
9
12
8
6
7
20
21
24
25
19
26
21
28
21
23
23.1
23.2
19
26
19
21
33
2200-0210

Service kits

		DN25 25 mm	DN40 38 mm	DN50 51 mm	DN65 63.5 mm	DN80 76.1 mm	DN100 101.6mm
□	Service kit, actuator	9611926500	9611926500	9611926500	9611926500	9611926500	9611926500
∆	Service kit, EPDM	9611926525	9611926526	9611926527	9611926528	9611926529	9611926530
∆	Service kit, HNBR	9611926531	9611926532	9611926533	9611926534	9611926535	9611926536
∆	Service kit, FPM	9611926537	9611926538	9611926539	9611926540	9611926541	9611926542

TD900737-2

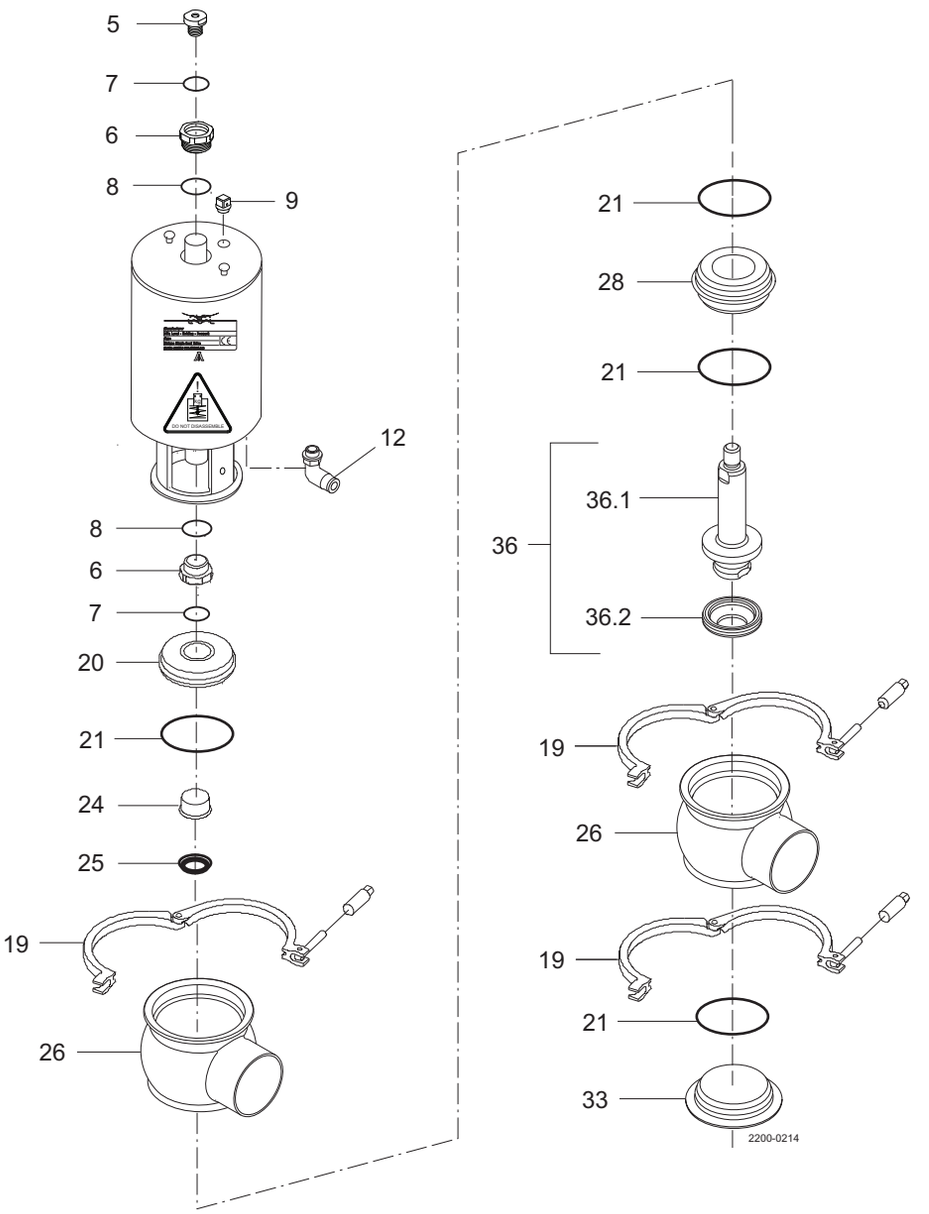
5
7
6
8
9
12
8
6
7
20
21
24
25
19
26
21
28
21
36
36.1
36.2
19
26
19
21
33
2200-0214

Pos		Qty	Denomination	DN25 25 mm	DN40 38 mm	DN50 51 mm	DN65 63.5 mm	DN80 76.1 mm	DN100 101.6mm
			Actuator, complete						
			(NO-RA)	9613154836	9613154837	9613154838	9613154839	9613154840	9613154805
			Actuator, complete (NC-RA)	9613154831	9613154832	9613154833	9613154834	9613154835	9613154810
			Actuator, complete (A/A) . .	9613154841	9613154842	9613154843	9613154844	9613154845	9613154815
5		1	Adapter, plastic (- 0115) . .						
		1	Adapter, steel (0115 - 0518)						
		1	Adapter, steel (0518 -) . . .	9615374701	9615374701	9615374701	9615374701	9615374701	9615374701
6	●	2	Bushing						
7	●	2	O-ring						
8	●	2	O-ring						
9		1	Plug	9613414101	9613414101	9613414101	9613414101	9613414101	9613414101
12		1(2)	Air fitting	9611994682	9611994682	9611994682	9611994682	9611994682	9611991988
Valve Body Part									
Sealing Element									
20		1	Sealing element	9613127102	9613127102	9613127103	9613127104	9613127105	9613127106
21		2	O-ring, EPDM (standard) . .						
		2	O-ring, NBR						
		2	O-ring, FPM						
			O-ring, set (10 pcs.) EPDM	9614059422	9614059422	9614059425	9614059428	9614059431	9614059434
			O-ring, set (10 pcs.) HNBR	9614059423	9614059423	9614059426	9614059429	9614059432	9614059435
			O-ring, set (10 pcs.) FPM .	9614059424	9614059424	9614059427	9614059430	9614059433	9614059436
24		1	Bearing	9613125001	9613125001	9613125001	9613125001	9613125001	9613125001
25		1	Lip seal, EPDM (standard) .						
		1	Lip seal, NBR						
		1	Lip seal, FPM						
		1	Lip seal, set (10 pcs.)						
			EPDM	9614059419	9614059419	9614059419	9614059419	9614059419	9614059419
		1	Lip seal, set (10 pcs.)						
			HNBR	9614059420	9614059420	9614059420	9614059420	9614059420	9614059420
		1	Lip seal, set (10 pcs.) FPM	9614059421	9614059421	9614059421	9614059421	9614059421	9614059421
33		1	Lower bonnet						
Seat									
21		2	O-ring, EPDM (standard) . .						
		2	O-ring, NBR						
		2	O-ring, FPM						
			O-ring, set (10 pcs.) EPDM	9614059422	9614059422	9614059425	9614059428	9614059431	9614059434
			O-ring, set (10 pcs.) HNBR	9614059423	9614059423	9614059426	9614059429	9614059432	9614059435
			O-ring, set (10 pcs.) FPM .	9614059424	9614059424	9614059427	9614059430	9614059433	9614059436
28		1	Seat	9613127501	9613127502	9613127503	9613127504	9613127505	9613127506
Clamp									
19		3	Clamp	9612939303	9612939303	9612939304	9612939305	9612939306	9612939307
Valve Body									
26		2	Valve body, upper, 1 ports,						
			clamp	9613161501	9613161503	9613161505	9613161507	9613161509	9613161511
		2	Valve body, upper, 2 ports,						
			clamp	9613161502	9613161504	9613161506	9613161508	9613161510	9613161512
		2	Valve body, upper, 1 ports,						
			welding ends	9613139313	9613139315	9613139317	9613139319	9613139321	9613139323
		2	Valve body, upper, 2 ports,						
			welding ends	9613139314	9613139316	9613139318	9613139320	9613139322	9613139324
Valve Plug									
36		1	Plug, shut off, complete . .	9613155801	9613155802	9613155803	9613155804	9613155805	9613155806
36.1		1	Plug, shut off, ...	9613147301	9613151101	9613151102	9613151103	9613151104	9613151105
36.2Δ		1	Plug seal, PTFE						
			Plug seal, set (10 pcs.)						
			PTFE	9614059448	9614059449	9614059450	9614059451	9614059452	9614059453

Parts marked with ● are included in the service kits (actuator)

Parts marked with Δ are included in the service kits (product wetted parts)

Tool for bushing (pos. 24) 9613160901

Recommended spare parts: Service kits.

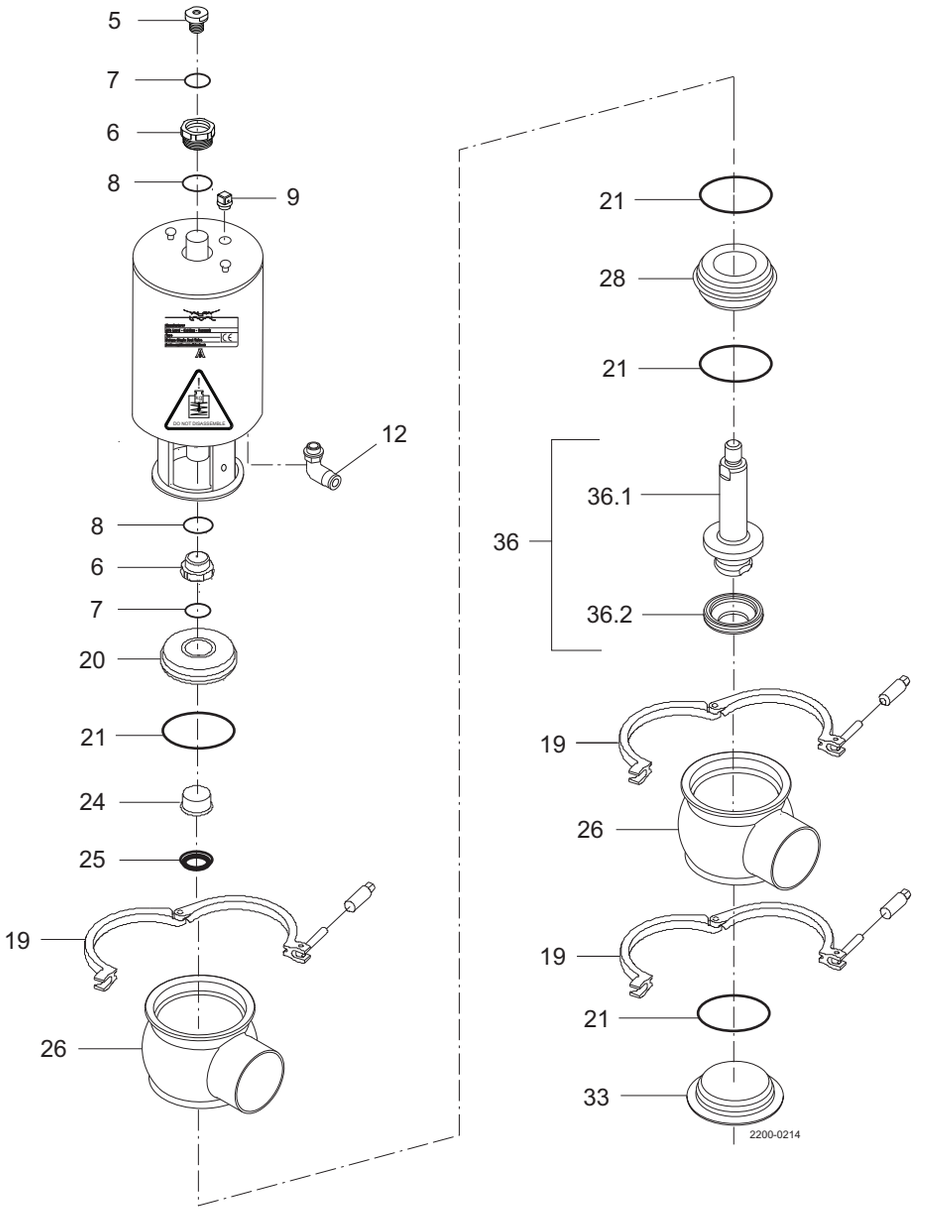
5
7
6
8
9
12
8
6
7
20
21
24
25
19
26
21
28
21
36
36.1
36.2
19
26
19
21
33
2200-0214

Service kits

		DN25 25 mm	DN40 38 mm	DN50 51 mm	DN65 63.5 mm	DN80 76.1 mm	DN100 101.6 mm
□	Service kit, actuator	9611926500	9611926500	9611926500	9611926500	9611926500	9611926500
∆	Service kit, EPDM	8010014728	9611926648	9611926649	9611926650	9611926651	9611926652
∆	Service kit, HNBR	8010014729	9611926653	9611926654	9611926655	9611926656	9611926657
∆	Service kit, FPM	8010014730	9611926658	9611926659	9611926660	9611926661	9611926662

TD900738-2

If the actuator is marked with a danger warning do NOT attempt to cut the actuator open.



Do NOT attempt to disassemble the actuator due to spring under load danger!



Do NOT attempt to cut the actuator open, due to spring under load danger!

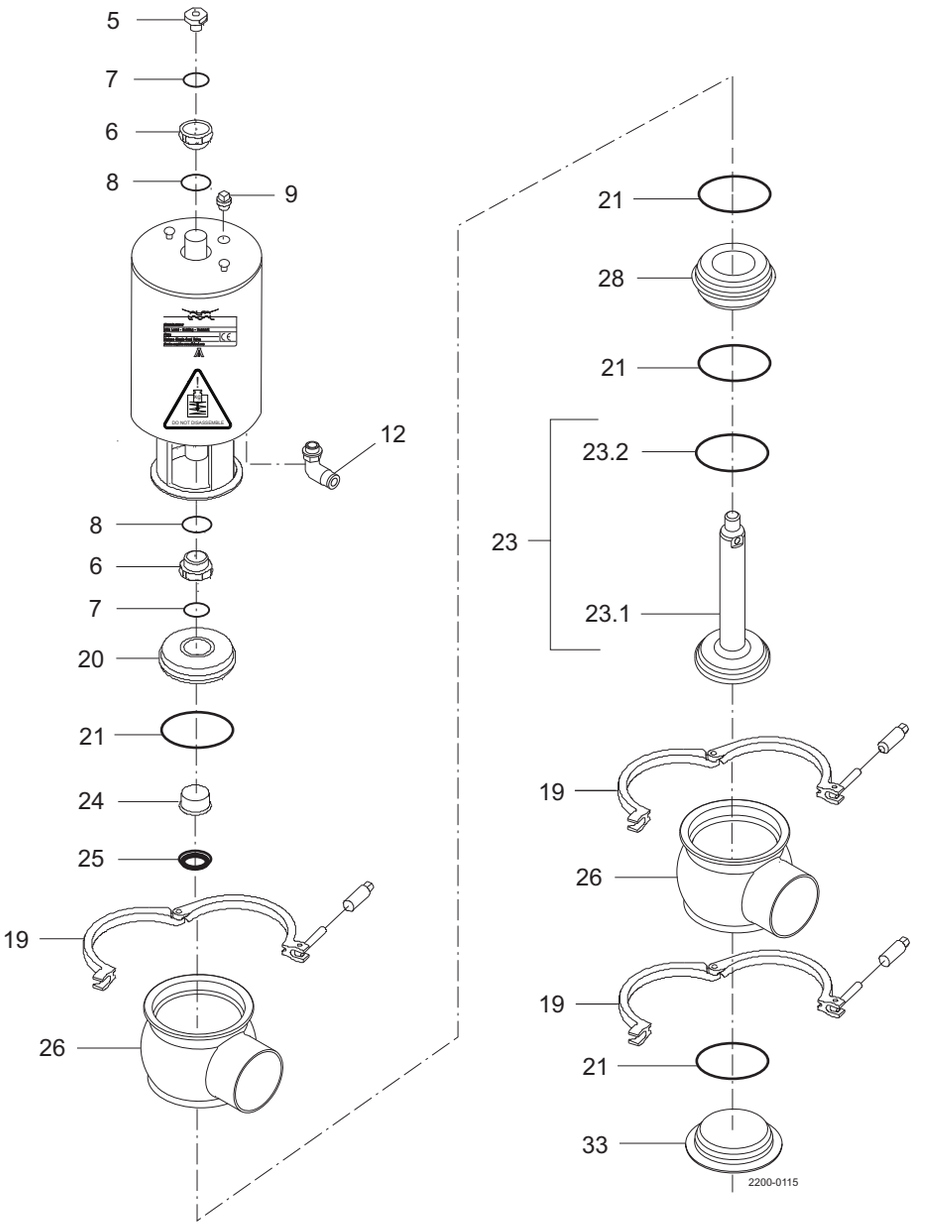

Pos		Qty	Denomination	DN 25 25 mm	DN 40 38 mm	DN 50 51 mm	DN 65 63.5 mm	DN 80 76.1 mm	DN 100 101.6 mm
Actuator									
			Actuator, complete (NO-RA)	9613154806	9613154806	9613154807	9613154808	9613154809	9613154810
			Actuator, complete (NC-RA)	9613154801	9613154801	9613154802	9613154803	9613154804	9613154805
			Actuator, complete (A/A)	9613154811	9613154811	9613154812	9613154813	9613154814	9613154815
5		1	Adapter, plastic (- 0115)						
		1	Adapter, steel (0115 - 0518)						
		1	Adapter, steel (0518 -)	9615374701	9615374701	9615374701	9615374701	9615374701	9615374701
6	□	2	Bushing						
7	□	2	O-ring						
8	□	2	O-ring						
9		1	Plug	9613414101	9613414101	9613414101	9613414101	9613414101	9613414101
12		1(2)	Air fitting	9611991988	9611991988	9611991988	9611991988	9611991988	9611991988
Clamp									
19		3	Clamp	9612939303	9612939303	9612939304	9612939305	9612939306	9612939307
Bonnet									
20		1	Bonnet	9613127102	9613127102	9613127103	9613127104	9613127105	9613127106
21	♦	4	O-ring, EPDM (standard)						
		4	O-ring, HNBR						
		4	O-ring, FPM						
			O-ring set, (10 pcs.) EPDM	9614059422	9614059422	9614059425	9614059428	9614059431	9614059434
			O-ring set, (10 pcs.) HNBR	9614059423	9614059423	9614059426	9614059429	9614059432	9614059435
			O-ring set, (10 pcs.) FPM	9614059424	9614059424	9614059427	9614059430	9614059433	9614059436
24		1	Bushing	9613125002	9613125002	9613125002	9613125002	9613125002	9613125002
25	♦	1	Lip seal, EPDM (standard)						
		1	Lip seal, HNBR						
		1	Lip seal, FPM						
			Lip seal set, (10 pcs.) EPDM	9614059419	9614059419	9614059419	9614059419	9614059419	9614059419
			Lip seal set, (10 pcs.) HNBR	9614059420	9614059420	9614059420	9614059420	9614059420	9614059420
			Lip seal set, (10 pcs.) FPM	9614059421	9614059421	9614059421	9614059421	9614059421	9614059421
33		1	Lower bonnet	9613130102	9613130102	9613130103	9613130104	9613130105	9613130106
Seat									
28		1	Seat	9613127501	9613127502	9613127503	9613127504	9613127505	9613127506
Valve body									
26		2	Valve body, upper, 1 port ISO	9613139301	9613139303	9613139305	9613139307	9613139309	9613139311
		2	Valve body, upper, 2 ports ISO	9613139302	9613139304	9613139306	9613139308	9613139310	9613139312
		2	Valve body, upper, 1 port DIN	9613139401	9613139403	9613139405	9613139407	9613139409	9613139411
		2	Valve body, upper, 2 ports DIN	9613139402	9613139404	9613139406	9613139408	9613139410	9613139412
Valve plug									
23		1	Plug, shut-off RA, ISO, complete, EPDM (standard)	9613127601	9613127602	9613127603	9613127604	9613127605	9613127606
		1	Plug, shut-off RA, ISO, complete, HNBR	9613127613	9613127614	9613127615	9613127616	9613127617	9613127618
		1	Plug, shut-off RA, ISO, complete, FPM	9613127625	9613127626	9613127627	9613127628	9613127629	9613127630
		1	Plug, shut-off RA, DIN, complete, EPDM (standard)	9613127607	9613127608	9613127609	9613127610	9613127611	9613127612
		1	Plug, shut-off RA, DIN, complete, HNBR	9613127619	9613127620	9613127621	9613127622	9613127623	9613127624
		1	Plug, shut-off RA, DIN, complete, FPM	9613127631	9613127632	9613127633	9613127634	9613127635	9613127636
23.1		1	Plug, shut-off RA, ISO	9613149801	9613139902	9613139903	9613139904	9613139905	9613139906
		1	Plug, shut-off RA, DIN	9613149802	9613139908	9613139909	9613139910	9613139911	9613139912
23.2	♦	1	Plug seal, EPDM (standard)						
		1	Plug seal, HNBR						
		1	Plug seal, FPM						
			Plug seal set, (10 pcs.) EPDM	9614059401	9614059404	9614059407	9614059410	9614059413	9614059416
			Plug seal set, (10 pcs.) HNBR	9614059402	9614059405	9614059408	9614059411	9614059414	9614059417
			Plug seal set, (10 pcs.) FPM	9614059403	9614059406	9614059409	9614059412	9614059415	9614059418

If the actuator is marked with a danger warning do NOT attempt to cut the actuator open.



Do NOT attempt to disassemble the actuator due to spring under load danger!



Do NOT attempt to cut the actuator open, due to spring under load danger!

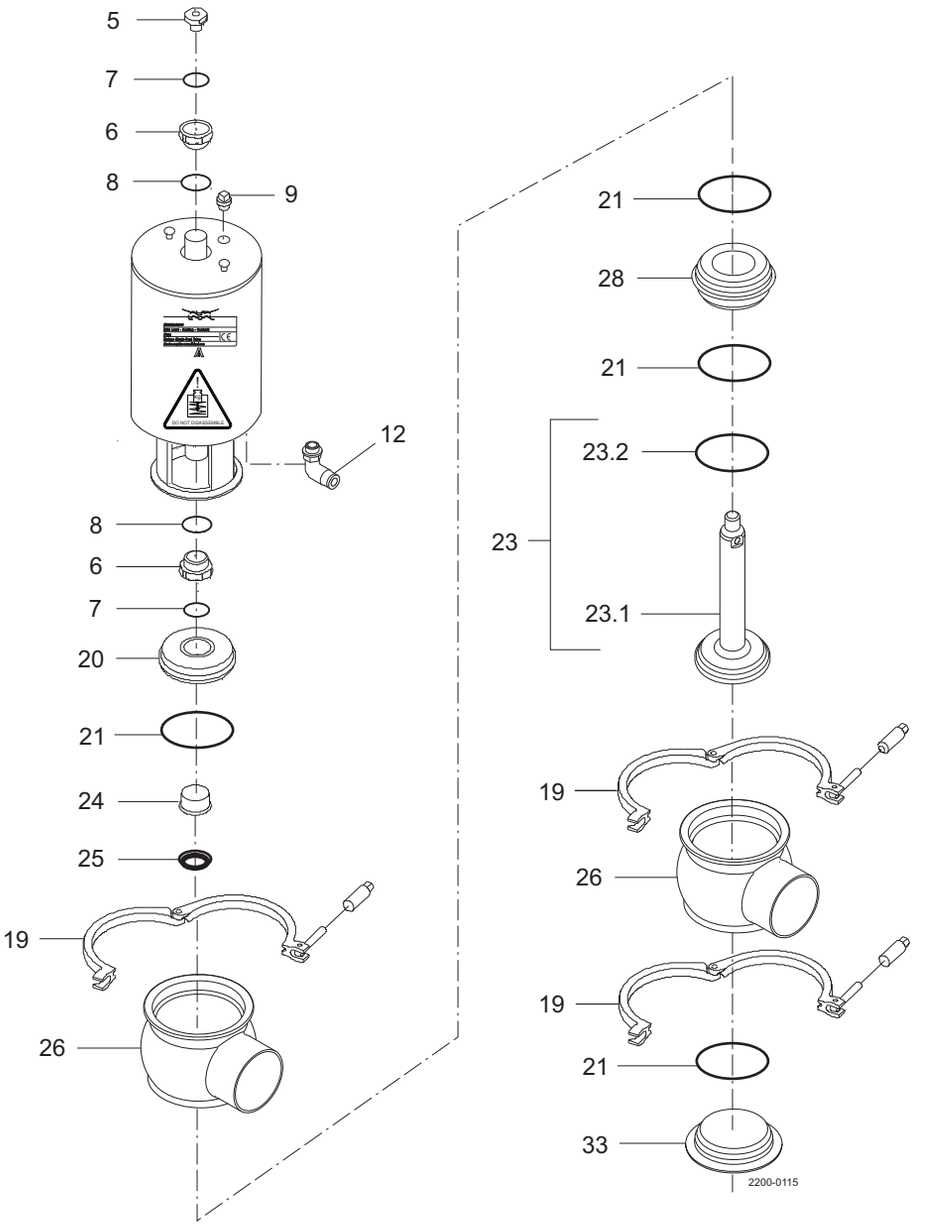

		DN 25 25 mm	DN 40 38 mm	DN 50 51 mm	DN 65 63.5 mm	DN 80 76.1 mm	DN 100 101.6 mm
Service kits							
□	Service kit, actuator	9611926500	9611926500	9611926500	9611926500	9611926500	9611926500
♦	Service kit, EPDM	9611926525	9611926526	9611926527	9611926528	9611926529	9611926530
♦	Service kit, HNBR	9611926531	9611926532	9611926533	9611926534	9611926535	9611926536
♦	Service kit, FPM	9611926537	9611926538	9611926539	9611926540	9611926541	9611926542

Parts marked with □♦ are included in the service kits. Recommended spare parts: service kits.

TD 900-350/3

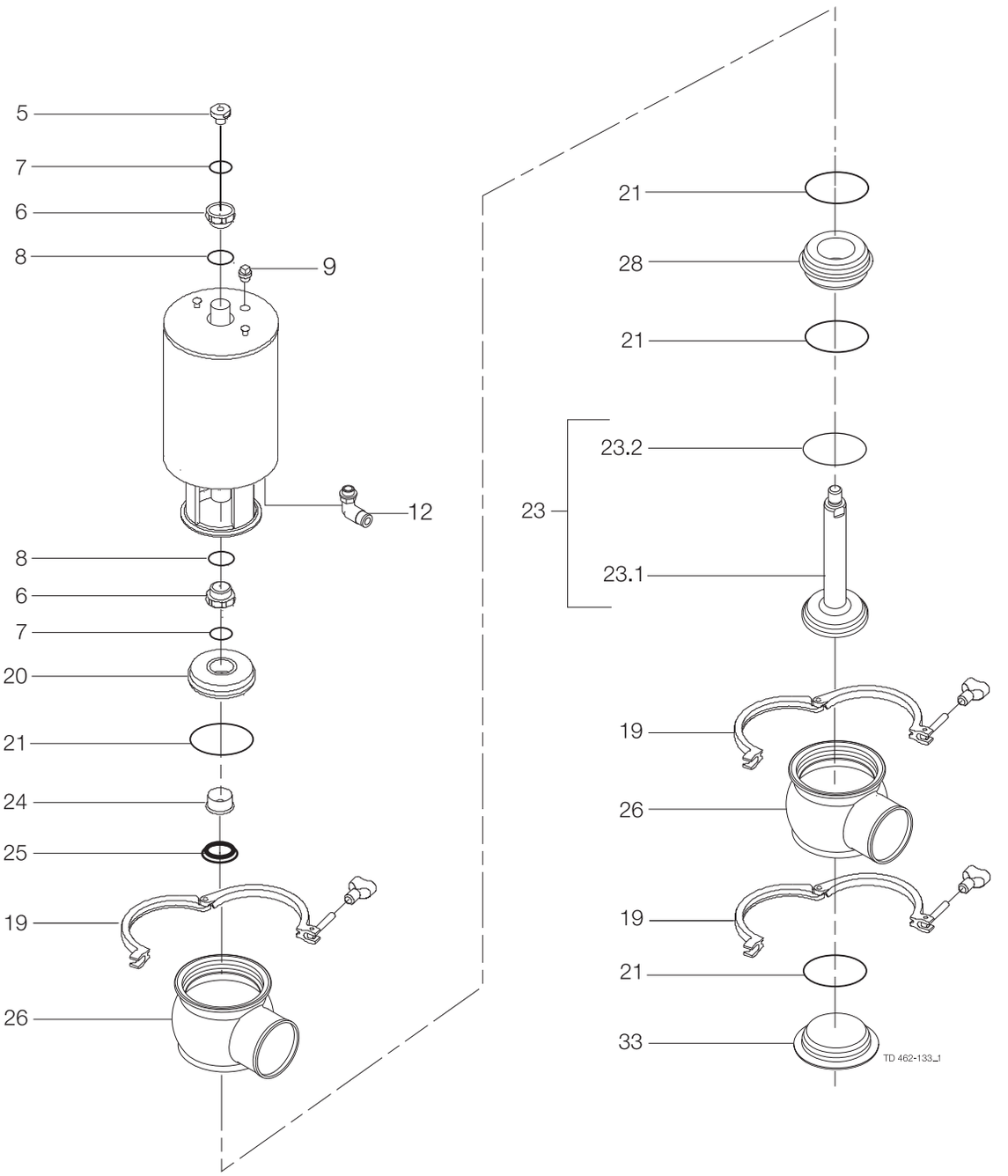
5
7
6
8
9
12
8
6
7
20
21
24
25
19
26
21
28
21
23.2
23
23.1
19
26
19
21
33
TD 462-133_1

Pos		Qty	Denomination	1"	1½"	2"	2½"	3"	4"
Actuator									
			Actuator, complete (NO-RA)	9613154836	9613154836	9613163137	9613154838	9613154839	9613163140
			Actuator, complete (NC-RA)	9613154831	9613154831	9613154832	9613154833	9613154834	9613154835
			Actuator, complete (A/A)	9613163141	9613163141	9613163142	9613163143	9613163144	9613163145
5		1	Adapter, plastic (- 0115)						
		1	Adapter, steel (0115 - 0518)						
		1	Adapter, steel (0518 -)	9615374701	9615374701	9615374701	9615374701	9615374701	9615374701
6	□	2	Bushing						
7	□	2	O-ring						
8	□	2	O-ring						
9		1	Plug	9613414101	9613414101	9613414101	9613414101	9613414101	9613414101
12		1(2)	Air fitting	9611994682	9611994682	9611994682	9611994682	9611994682	9611994682
Clamp									
19		3	Clamp	9612939316	9612939316	9612939317	9612939318	9612939319	9612939320
Bonnet									
20		1	Bonnet	9613127102	9613127102	9613127103	9613127104	9613127105	9613127106
21	♦	4	O-ring, EPDM (standard)						
	♦	4	O-ring, HNBR						
	♦	4	O-ring, FPM						
			O-ring, set (10 pcs.) EPDM	9614059422	9614059422	9614059425	9614059428	9614059431	9614059434
			O-ring, set (10 pcs.) HNBR	9614059423	9614059423	9614059426	9614059429	9614059432	9614059435
			O-ring, set (10 pcs.) FPM	9614059424	9614059424	9614059427	9614059430	9614059433	9614059436
24		1	Bushing	9613125002	9613125002	9613125002	9613125002	9613125002	9613125002
25	♦	1	Lip seal, EPDM (standard)						
	♦	1	Lip seal, HNBR						
	♦	1	Lip seal, FPM						
			Lip seal, set (10 pcs.) EPDM	9614059419	9614059419	9614059419	9614059419	9614059419	9614059419
			Lip seal, set (10 pcs.) HNBR	9614059420	9614059420	9614059420	9614059420	9614059420	9614059420
			Lip seal, set (10 pcs.) FPM	9614059421	9614059421	9614059421	9614059421	9614059421	9614059421
33		1	Lower bonnet	9613130102	9613130102	9613130103	9613130104	9613130105	9613130106
Seat									
28		1	Seat	9613127501	9613127502	9613127503	9613127504	9613127505	9613127506
Valve Body									
26		2	Valve body, upper, 1 port, clamp	9613161501	9613161503	9613161505	9613161507	9613161509	9613161511
		2	Valve body, upper, 2 ports, clamp	9613161502	9613161504	9613161506	9613161508	9613161510	9613161512
		2	Valve body, upper, 1 port, welding ends	9613139313	9613139315	9613139317	9613139319	9613139321	9613139323
		2	Valve body, upper, 2 ports, welding ends	9613139314	9613139316	9613139318	9613139320	9613139322	9613139324
Valve Plug									
23		1	Plug, shut-off, RA, complete, EPDM (standard)	9613127601	9613127602	9613127603	9613127604	9613127605	9613127606
		1	Plug, shut-off, RA, complete, HNBR	9613127613	9613127614	9613127615	9613127616	9613127617	9613127618
		1	Plug, shut-off, RA, complete, FPM	9613127625	9613127626	9613127627	9613127628	9613127629	9613127630
23.1		1	Plug, shut-off	9613149801	9613139902	9613139903	9613139904	9613139905	9613139906
23.2	♦	1	Plug seal, EPDM (standard)						
	♦	1	Plug seal, HNBR						
	♦	1	Plug seal, FPM						
			Plug seal, set (10 pcs.) EPDM	9614059401	9614059404	9614059407	9614059410	9614059413	9614059416
			Plug seal, set (10 pcs.) HNBR	9614059402	9614059405	9614059408	9614059411	9614059414	9614059417
			Plug seal, set (10 pcs.) FPM	9614059403	9614059406	9614059409	9614059412	9614059415	9614059418

		1"	1½"	2"	2½"	3"	4"
□	**Service kit, actuator**	**9611926500**	**9611926500**	**9611926500**	**9611926500**	**9611926500**	**9611926500**
♦	**Service kit, EPDM**	**9611926525**	**9611926526**	**9611926527**	**9611926528**	**9611926529**	**9611926530**
♦	**Service kit, HNBR**	**9611926531**	**9611926532**	**9611926533**	**9611926534**	**9611926535**	**9611926536**
♦	**Service kit, FPM**	**9611926537**	**9611926538**	**9611926539**	**9611926540**	**9611926541**	**9611926542**

Parts marked with □ are included in the service kits (actuator).
Parts marked with • are included in the service kits (product wetted parts).

Recommended spare parts: Service kits.

TD 900365/2

If the actuator is marked with a danger warning do NOT attempt to cut the actuator open.



Do NOT attempt to disassemble the actuator due to spring under load danger.



Do NOT attempt to cut the actuator open, due to spring under load danger.

AND



Do NOT attempt to cut the actuator open, due to spring under load danger.

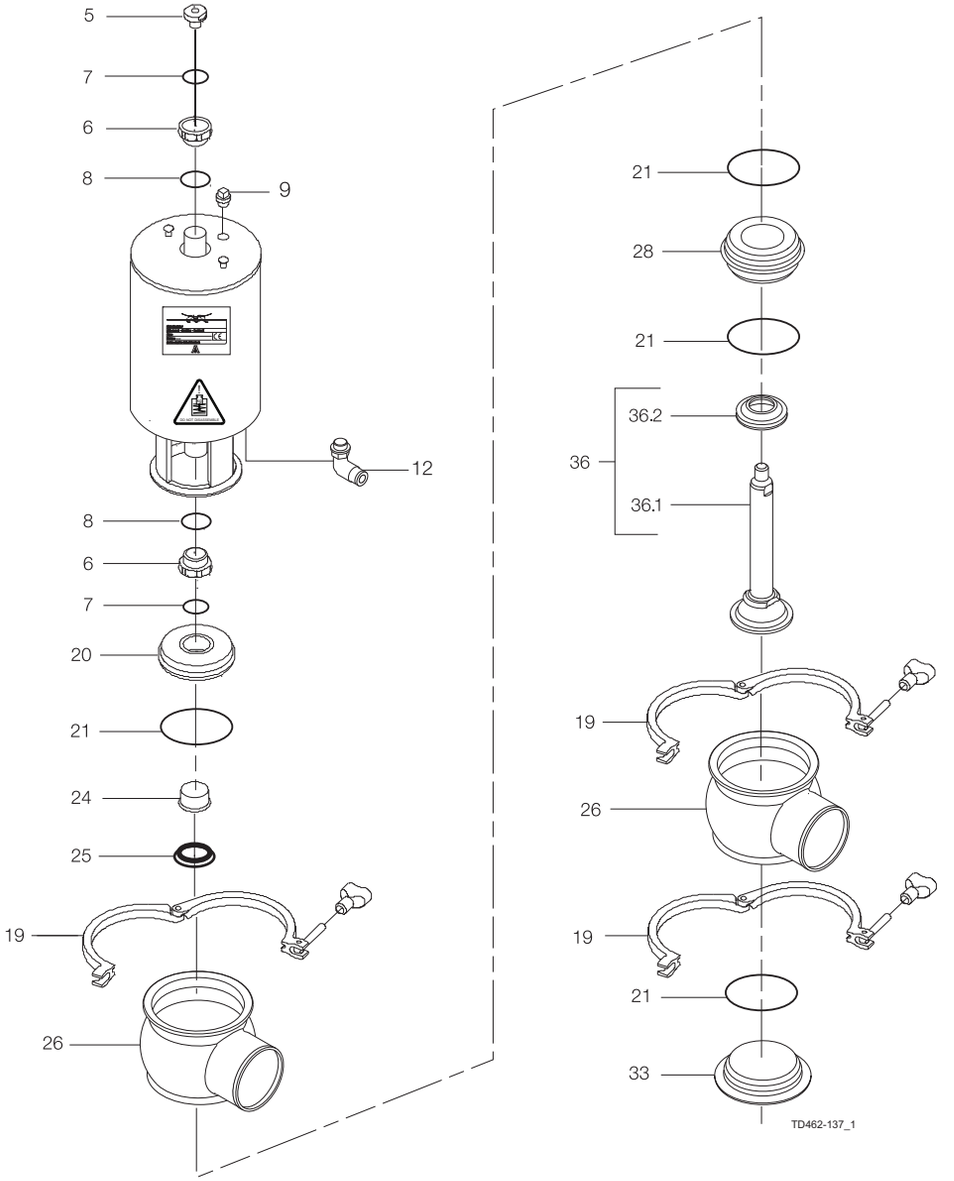

Pos		Qty	Denomination	1½"	2"	2½"	3"	4"
Actuator								
			Actuator, complete (NO-RA)	9613154836	9613163137	9613154838	9613154839	9613163140
			Actuator, complete (NC-RA)	9613154831	9613154832	9613154833	9613154834	9613154835
			Actuator, complete (A/A)	9613163141	9613163142	9613163143	9613163144	9613163145
5		1	Adapter, plastic (- 0115)					
		1	Adapter, steel (0115 - 0518)					
		1	Adapter, steel (0518 -)	9615374701	9615374701	9615374701	9615374701	9615374701
6	□	2	Bushing					
7	□	2	O-ring					
8	□	2	O-ring					
9		1	Plug	9613414101	9613414101	9613414101	9613414101	9613414101
12		1(2)	Air fitting	9611994682	9611994682	9611994682	9611994682	9611994682
Clamp								
19		3	Clamp	9612939316	9612939317	9612939318	9612939319	9612939320
Bonnet								
20		1	Bonnet	9613127102	9613127103	9613127104	9613127105	9613127106
21	♦	4	O-ring, EPDM (standard)					
	♦	4	O-ring, HNBR					
	♦	4	O-ring, FPM					
			O-ring, set (10 pcs.) EPDM	9614059422	9614059425	9614059428	9614059431	9614059434
			O-ring, set (10 pcs.) HNBR	9614059423	9614059426	9614059429	9614059432	9614059435
			O-ring, set (10 pcs.) FPM	9614059424	9614059427	9614059430	9614059433	9614059436
24		1	Bushing	9613125002	9613125002	9613125002	9613125002	9613125002
25	♦	1	Lip seal, EPDM (standard)					
	♦	1	Lip seal, HNBR					
	♦	1	Lip seal, FPM					
			Lip seal, set (10 pcs.) EPDM	9614059419	9614059419	9614059419	9614059419	9614059419
			Lip seal, set (10 pcs.) HNBR	9614059420	9614059420	9614059420	9614059420	9614059420
			Lip seal, set (10 pcs.) FPM	9614059421	9614059421	9614059421	9614059421	9614059421
33		1	Lower bonnet	9613130102	9613130103	9613130104	9613130105	9613130106
Seat								
28		1	Seat	9613127502	9613127503	9613127504	9613127505	9613127506
Valve Body								
26		2	Valve body, upper, 1 port, clamp	9613161503	9613161505	9613161507	9613161509	9613161511
		2	Valve body, upper, 2 ports, clamp	9613161504	9613161506	9613161508	9613161510	9613161512
		2	Valve body, upper, 1 port, welding ends	9613139315	9613139317	9613139319	9613139321	9613139323
		2	Valve body, upper, 2 ports, welding ends	9613139316	9613139318	9613139320	9613139322	9613139324
Valve Plug								
36		1	Plug, shut off RA, complete	9613160802	9613160803	9613160804	9613160805	9613160806
36.1		1	Plug, shut off RA	9613160701	9613160702	9613160703	9613160704	9613160705
36.2	♦	1	Plug seal, PTFE					
			Plug seal, set (10 pcs.) PTFE	9614059449	9614059450	9614059451	9614059452	9614059453

		1½"	2"	2½"	3"	4"
□	**Service kit, actuator**	**9611926500**	**9611926500**	**9611926500**	**9611926500**	**9611926500**
♦	**Service kit, EPDM**	**9611926648**	**9611926649**	**9611926650**	**9611926651**	**9611926652**
♦	**Service kit, HNBR**	**9611926653**	**9611926654**	**9611926655**	**9611926656**	**9611926657**
♦	**Service kit, FPM**	**9611926658**	**9611926659**	**9611926660**	**9611926661**	**9611926662**

Parts marked with □ are included in the service kits (actuator).

Parts marked with • are included in the service kits (product wetted parts).

Recommended spare parts: Service kits.

TD 900346/3

If the actuator is marked with a danger warning do NOT attempt to cut the actuator open.



Do NOT attempt to disassemble the actuator due to spring under load danger!



Do NOT attempt to cut the actuator open, due to spring under load danger!

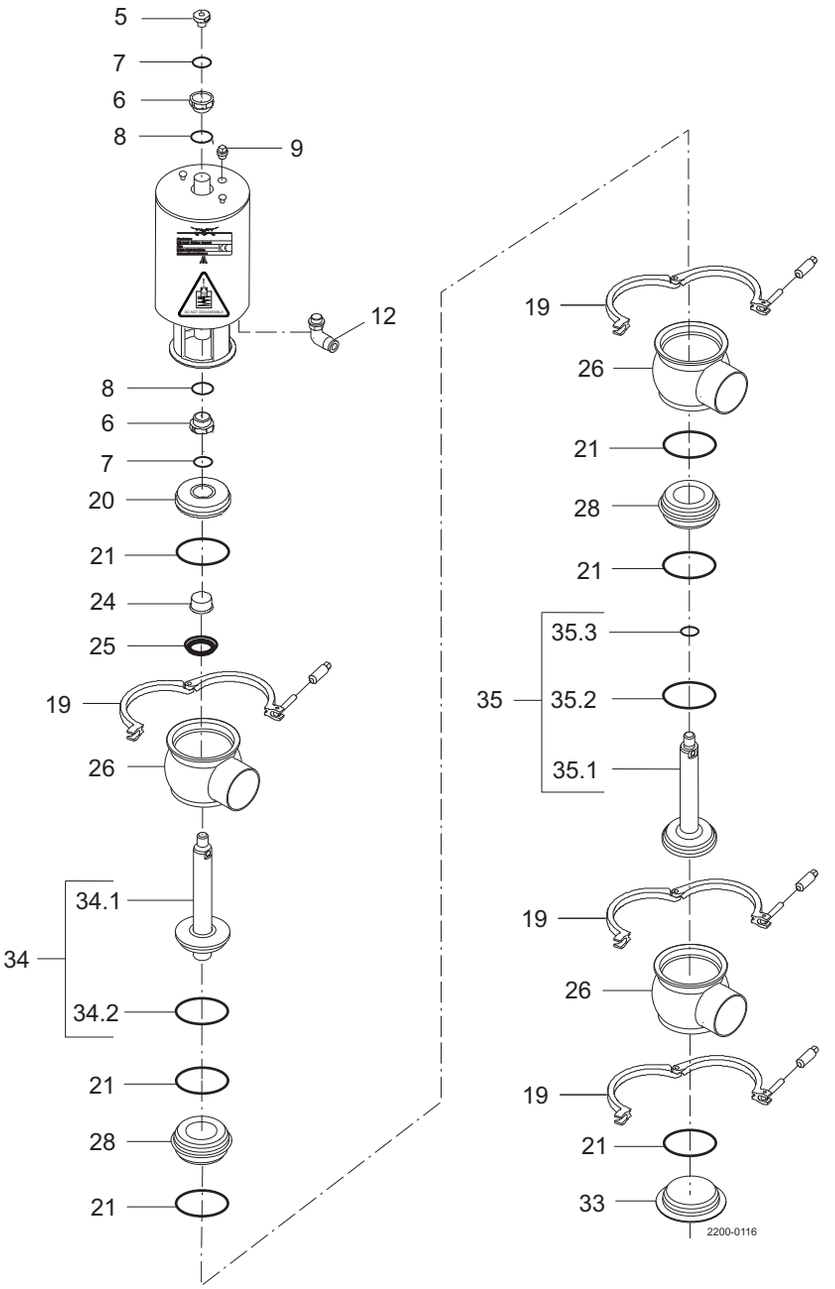

Pos		Qty	Denomination	DN 25 25 mm	DN 40 38 mm	DN 50 51 mm	DN 65 63.5 mm	DN 80 76.1 mm	DN 100 101.6 mm
Actuator									
			Actuator, complete (NO-RA)	9613154806	9613154806	9613154807	9613154808	9613154809	9613154810
			Actuator, complete (NC-RA)	9613154801	9613154801	9613154802	9613154803	9613154804	9613154805
			Actuator, complete (A/A)	9613154811	9613154811	9613154812	9613154813	9613154814	9613154815
5		1	Adapter, plastic (- 0115)						
		1	Adapter, steel (0115 - 0518)						
		1	Adapter, steel (0518 -)	9615374701	9615374701	9615374701	9615374701	9615374701	9615374701
6	□	2	Bushing						
7	□	2	O-ring						
8	□	2	O-ring						
9		1	Plug	9613414101	9613414101	9613414101	9613414101	9613414101	9613414101
12		1(2)	Air fitting	9611991988	9611991988	9611991988	9611991988	9611991988	9611991988
Clamp									
19		4	Clamp	9612939303	9612939303	9612939304	9612939305	9612939306	9612939307
Bonnet									
20		1	Bonnet	9613127102	9613127102	9613127103	9613127104	9613127105	9613127106
21	♦	6	O-ring, EPDM (standard)						
		6	O-ring, HNBR						
		6	O-ring, FPM						
			O-ring set, (10 pcs.) EPDM	9614059422	9614059422	9614059425	9614059428	9614059431	9614059434
			O-ring set, (10 pcs.) HNBR	9614059423	9614059423	9614059426	9614059429	9614059432	9614059435
			O-ring set, (10 pcs.) FPM	9614059424	9614059424	9614059427	9614059430	9614059433	9614059436
24		1	Bushing	9613125002	9613125002	9613125002	9613125002	9613125002	9613125002
25	♦	1	Lip seal, EPDM (standard)						
		1	Lip seal, HNBR						
		1	Lip seal, FPM						
			Lip seal set, (10 pcs.) EPDM	9614059419	9614059419	9614059419	9614059419	9614059419	9614059419
			Lip seal set, (10 pcs.) HNBR	9614059420	9614059420	9614059420	9614059420	9614059420	9614059420
			Lip seal set, (10 pcs.) FPM	9614059421	9614059421	9614059421	9614059421	9614059421	9614059421
33		1	Lower bonnet	9613130102	9613130102	9613130103	9613130104	9613130105	9613130106
Seat									
28		2	Seat	9613127501	9613127502	9613127503	9613127504	9613127505	9613127506
Valve Body									
26		3	Valve body, upper, 1 port ISO	9613139301	9613139303	9613139305	9613139307	9613139309	9613139311
		3	Valve body, upper, 2 ports ISO	9613139302	9613139304	9613139306	9613139308	9613139310	9613139312
		3	Valve body, upper, 1 port DIN	9613139401	9613139403	9613139405	9613139407	9613139409	9613139411
		3	Valve body, upper, 2 ports DIN	9613139402	9613139404	9613139406	9613139408	9613139410	9613139412

If the actuator is marked with a danger warning do NOT attempt to cut the actuator open.



Do NOT attempt to disassemble the actuator due to spring under load danger!



Do NOT attempt to cut the actuator open, due to spring under load danger!

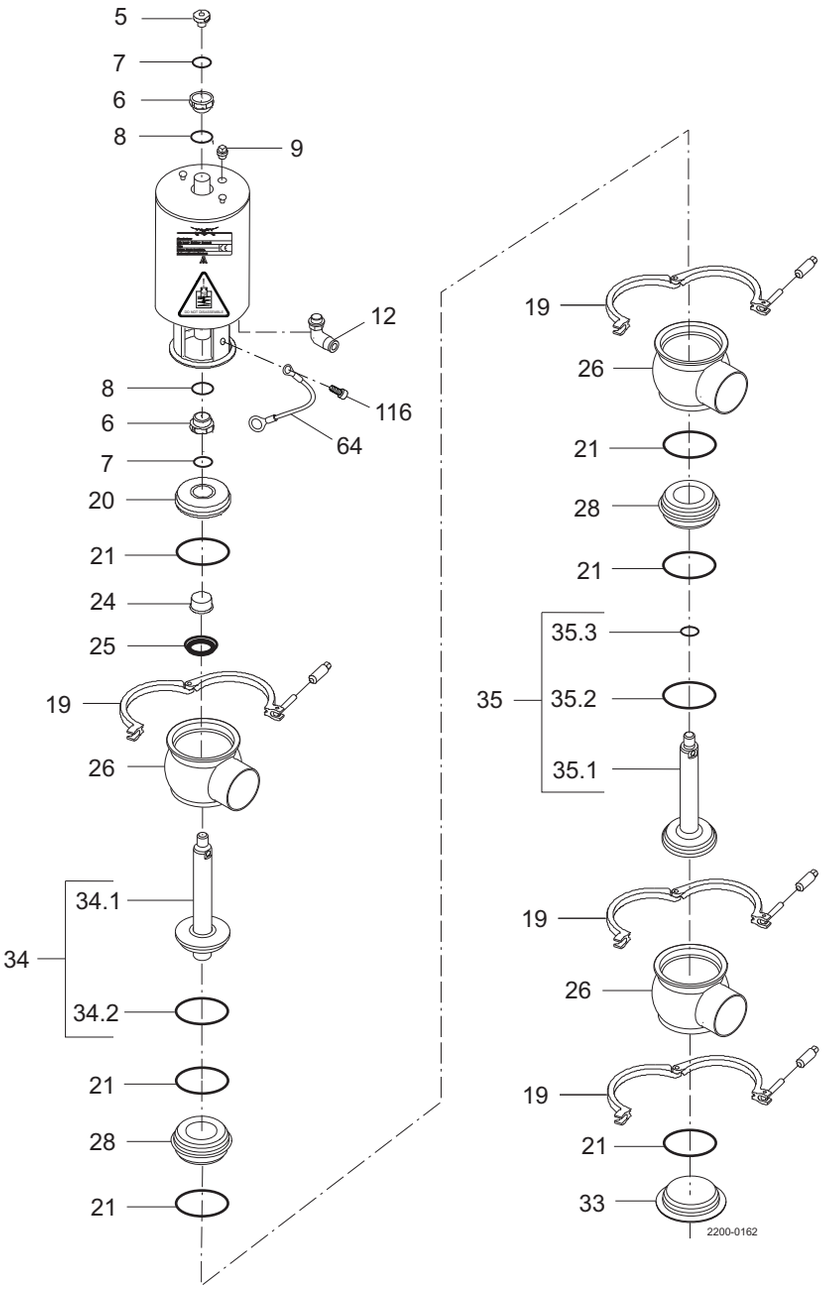

Pos	Qty	Denomination	DN 25 25 mm	DN 40 38 mm	DN 50 51 mm	DN 65 63.5 mm	DN 80 76.1 mm	DN 100 101.6 mm
Valve Plug								
34	1	Plug, change-over upper RA, ISO, complete, EPDM (standard)	9613162101	9613162102	9613162103	9613162104	9613162105	9613162106
	1	Plug, change-over upper RA, ISO, complete, HNBR	9613162113	9613162114	9613162115	9613162116	9613162117	9613162118
	1	Plug, change-over upper RA, ISO, complete, FPM	9613162125	9613162126	9613162127	9613162128	9613162129	9613162130
	1	Plug, change-over upper RA, DIN, complete, EPDM (standard)	9613162107	9613162108	9613162109	9613162110	9613162111	9613162112
	1	Plug, change-over upper RA, DIN, complete, HNBR	9613162119	9613162120	9613162121	9613162122	9613162123	9613162124
	1	Plug, change-over upper RA, DIN, complete, FPM	9613162131	9613162132	9613162133	9613162134	9613162135	9613162136
34.1	1	Plug, change-over upper RA, ISO	9613150201	9613140102	9613140103	9613140104	9613140105	9613140106
	1	Plug, change-over upper RA, DIN	9613150202	9613140108	9613140109	9613140110	9613140111	9613140112
34.2♦	1	Plug seal, EPDM (standard)						
	1	Plug seal, HNBR						
	1	Plug seal, FPM						
		Plug seal set, (10 pcs.) EPDM	9614059401	9614059404	9614059407	9614059410	9614059413	9614059416
		Plug seal set, (10 pcs.) HNBR	9614059402	9614059405	9614059408	9614059411	9614059414	9614059417
		Plug seal set, (10 pcs.) FPM	9614059403	9614059406	9614059409	9614059412	9614059415	9614059418
35	1	Plug, change-over lower RA, ISO, complete, EPDM (standard)	9613162201	9613162202	9613162203	9613162204	9613162205	9613162206
	1	Plug, change-over lower RA, ISO, complete, HNBR	9613162213	9613162214	9613162215	9613162216	9613162217	9613162218
	1	Plug, change-over lower RA, ISO, complete, FPM	9613162225	9613162226	9613162227	9613162228	9613162229	9613162230
	1	Plug, change-over lower RA, DIN, complete, EPDM (standard)	9613162207	9613162208	9613162209	9613162210	9613162211	9613162212
	1	Plug, change-over lower RA, DIN, complete, HNBR	9613162219	9613162220	9613162221	9613162222	9613162223	9613162224
	1	Plug, change-over lower RA, DIN, complete, FPM	9613162231	9613162232	9613162233	9613162234	9613162235	9613162236
35.1	1	Plug, change-over lower RA, ISO	9613150501	9613164601	9613164701	9613164702	9613164703	9613164704
	1	Plug, change-over lower RA, DIN	9613150502	9613164602	9613164705	9613164706	9613164707	9613164708
35.2♦	1	Plug seal, EPDM (standard)						
	1	Plug seal, HNBR						
	1	Plug seal, FPM						
		Plug seal set, (10 pcs.) EPDM	9614059401	9614059404	9614059407	9614059410	9614059413	9614059416
		Plug seal set, (10 pcs.) HNBR	9614059402	9614059405	9614059408	9614059411	9614059414	9614059417
		Plug seal set, (10 pcs.) FPM	9614059403	9614059406	9614059409	9614059412	9614059415	9614059418
35.3♦	1	O-ring, EPDM (standard)						
	1	O-ring, HNBR						
	1	O-ring, FPM						
		O-ring set, (10 pcs.) EPDM	9614059442	9614059443	9614059443	9614059443	9614059443	9614059443
		O-ring set, (10 pcs.) HNBR	9614059444	9614059445	9614059445	9614059445	9614059445	9614059445
		O-ring set, (10 pcs.) FPM	9614059446	9614059447	9614059447	9614059447	9614059447	9614059447

		DN 25 25 mm	DN 40 38 mm	DN 50 51 mm	DN 65 63.5 mm	DN 80 76.1 mm	DN 100 101.6 mm
Service kits							
□	**Service kit, actuator**	**9611926500**	**9611926500**	**9611926500**	**9611926500**	**9611926500**	**9611926500**
♦	**Service kit, EPDM**	**9611926597**	**9611926598**	**9611926599**	**9611926600**	**9611926601**	**9611926602**
♦	**Service kit, HNBR**	**9611926603**	**9611926604**	**9611926605**	**9611926606**	**9611926607**	**9611926608**
♦	**Service kit, FPM**	**9611926609**	**9611926610**	**9611926611**	**9611926612**	**9611926613**	**9611926614**

Parts marked with □♦ are included in the service kits.

Recommended spare parts: Service kits.

TD 900-350/3

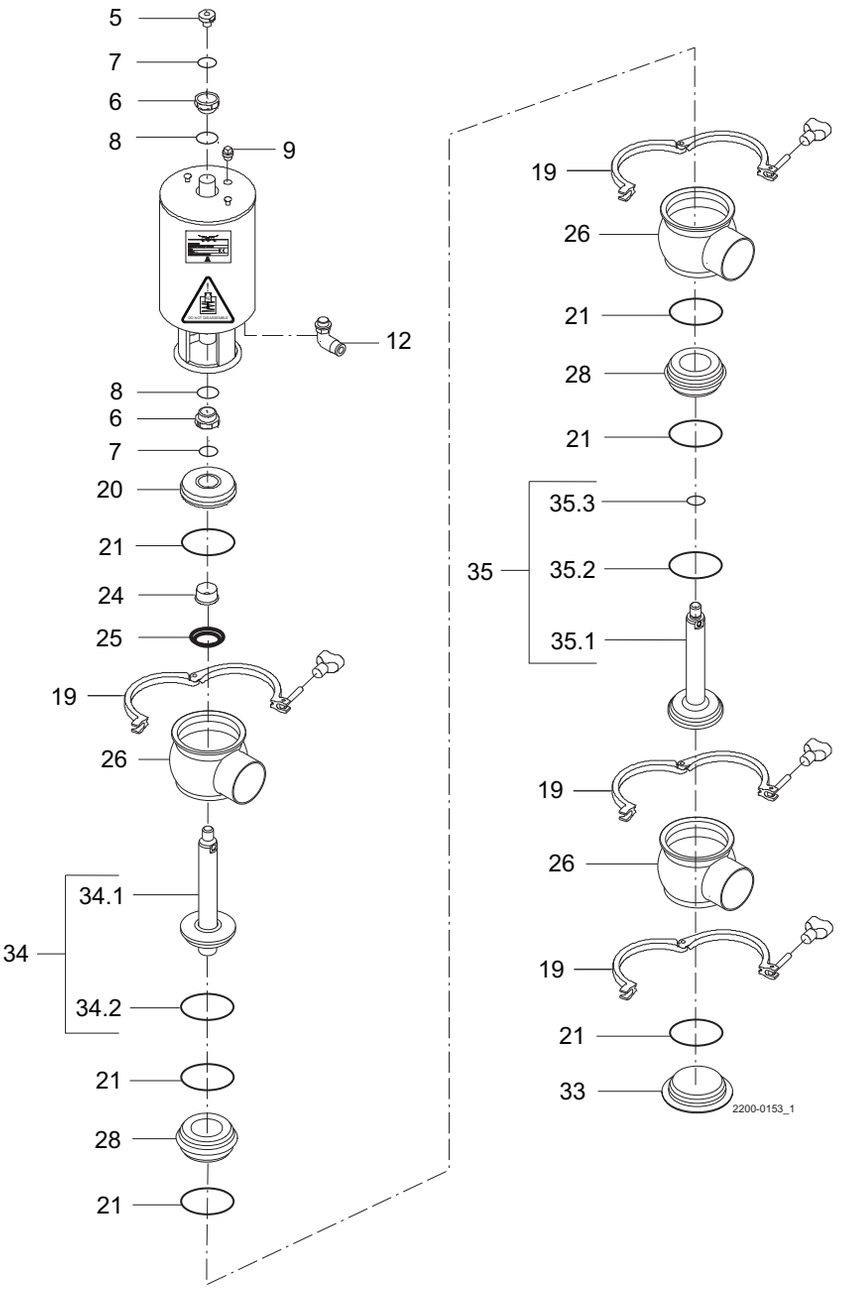
5
7
6
8
9
12
8
6
7
20
21
24
25
19
26
34
34.1
34.2
21
28
21
19
26
21
28
21
35
35.3
35.2
35.1
19
26
19
21
33
2200-0153_1

Pos		Qty	Denomination	1"	1½"	2"	2½"	3"	4"
Actuator									
			Actuator, complete (NO-RA)	9613154836	9613154836	9613163137	9613154838	9613154839	9613163140
			Actuator, complete (NC-RA)	9613154831	9613154831	9613154832	9613154833	9613154834	9613154835
			Actuator, complete (A/A)	9613163141	9613163141	9613163142	9613163143	9613163144	9613163145
5		1	Adapter, plastic (- 0115)						
		1	Adapter, steel (0115 - 0518)						
		1	Adapter, steel (0518 -)	9615374701	9615374701	9615374701	9615374701	9615374701	9615374701
6	□	2	Bushing						
7	□	2	O-ring						
8	□	2	O-ring						
9		1	Plug	9613414101	9613414101	9613414101	9613414101	9613414101	9613414101
12		1(2)	Air fitting	9611994682	9611994682	9611994682	9611994682	9611994682	9611994682
Clamp									
19		4	Clamp	9612939316	9612939316	9612939317	9612939318	9612939319	9612939320
Bonnet									
20		1	Bonnet	9613127102	9613127102	9613127103	9613127104	9613127105	9613127106
21	♦	6	O-ring, EPDM (standard)						
	♦	6	O-ring, HNBR						
	♦	6	O-ring, FPM						
			O-ring, set (10 pcs.) EPDM	9614059422	9614059422	9614059425	9614059428	9614059431	9614059434
			O-ring, set (10 pcs.) HNBR	9614059423	9614059423	9614059426	9614059429	9614059432	9614059435
			O-ring, set (10 pcs.) FPM	9614059424	9614059424	9614059427	9614059430	9614059433	9614059436
24		1	Bushing	9613125002	9613125002	9613125002	9613125002	9613125002	9613125002
25	♦	1	Lip seal, EPDM (standard)						
	♦	1	Lip seal, HNBR						
	♦	1	Lip seal, FPM						
			Lip seal, set (10 pcs.) EPDM	9614059419	9614059419	9614059419	9614059419	9614059419	9614059419
			Lip seal, set (10 pcs.) HNBR	9614059420	9614059420	9614059420	9614059420	9614059420	9614059420
			Lip seal, set (10 pcs.) FPM	9614059421	9614059421	9614059421	9614059421	9614059421	9614059421
33		1	Lower bonnet	9613130102	9613130102	9613130103	9613130104	9613130105	9613130106
Seat									
28		2	Seat	9613127501	9613127502	9613127503	9613127504	9613127505	9613127506
Valve Body									
26		3	Valve body, upper, 1 port, clamp	9613161501	9613161503	9613161505	9613161507	9613161509	9613161511
		3	Valve body, upper, 2 ports, clamp	9613161502	9613161504	9613161506	9613161508	9613161510	9613161512
		3	Valve body, upper, 1 port, welding ends	9613139313	9613139315	9613139317	9613139319	9613139321	9613139323
		3	Valve body, upper, 2 ports , welding ends	9613139314	9613139316	9613139318	9613139320	9613139322	9613139324
Valve Plug									
34		1	Plug, change-over, upper RA, complete, EPDM (standard)	9613162101	9613162102	9613162103	9613162104	9613162105	9613162106
		1	Plug, change-over, upper RA, complete, HNBR	9613162113	9613162114	9613162115	9613162116	9613162117	9613162118
		1	Plug, change-over, upper RA, complete, FPM	9613162125	9613162126	9613162127	9613162128	9613162129	9613162130
34.1		1	Plug, change-over, upper RA,	9613150201	9613140102	9613140103	9613140104	9613140105	9613140106
34.2	♦	1	Plug seal, EPDM (standard)						
	♦	1	Plug seal, HNBR						
	♦	1	Plug seal, FPM						
			Plug seal, set (10 pcs.) EPDM	9614059401	9614059404	9614059407	9614059410	9614059413	9614059416
			Plug seal, set (10 pcs.) HNBR	9614059402	9614059405	9614059408	9614059411	9614059414	9614059417
			Plug seal, set (10 pcs.) FPM	9614059403	9614059406	9614059409	9614059412	9614059415	9614059418
35		1	Plug, change-over, lower RA, complete, EPDM (standard)	9613162201	9613162202	9613162203	9613162204	9613162205	9613162206
		1	Plug, change-over, lower RA, complete, HNBR	9613162213	9613162214	9613162215	9613162216	9613162217	9613162218
		1	Plug, change-over, lower RA, complete, FPM	9613162225	9613162226	9613162227	9613162228	9613162229	9613162230
35.1		1	Plug, change-over, lower RA,	9613150501	9613164601	9613164701	9613164702	9613164703	9613164704
35.2	♦	1	Plug seal, EPDM (standard)						
	♦	1	Plug seal, HNBR						
	♦	1	Plug seal, FPM						
			Plug seal, set (10 pcs.) EPDM	9614059401	9614059404	9614059407	9614059410	9614059413	9614059416
			Plug seal, set (10 pcs.) HNBR	9614059402	9614059405	9614059408	9614059411	9614059414	9614059417
			Plug seal, set (10 pcs.) FPM	9614059403	9614059406	9614059409	9614059412	9614059415	9614059418
35.3	♦	1	O-ring, EPDM (standard)						
	♦	1	O-ring, HNBR						
	♦	1	O-ring, FPM						
			O-ring, set (10 pcs.) EPDM	9614059442	9614059443	9614059443	9614059443	9614059443	9614059443
			O-ring, set (10 pcs.) HNBR	9614059444	9614059445	9614059445	9614059445	9614059445	9614059445
			O-ring, set (10 pcs.) FPM	9614059446	9614059447	9614059447	9614059447	9614059447	9614059447

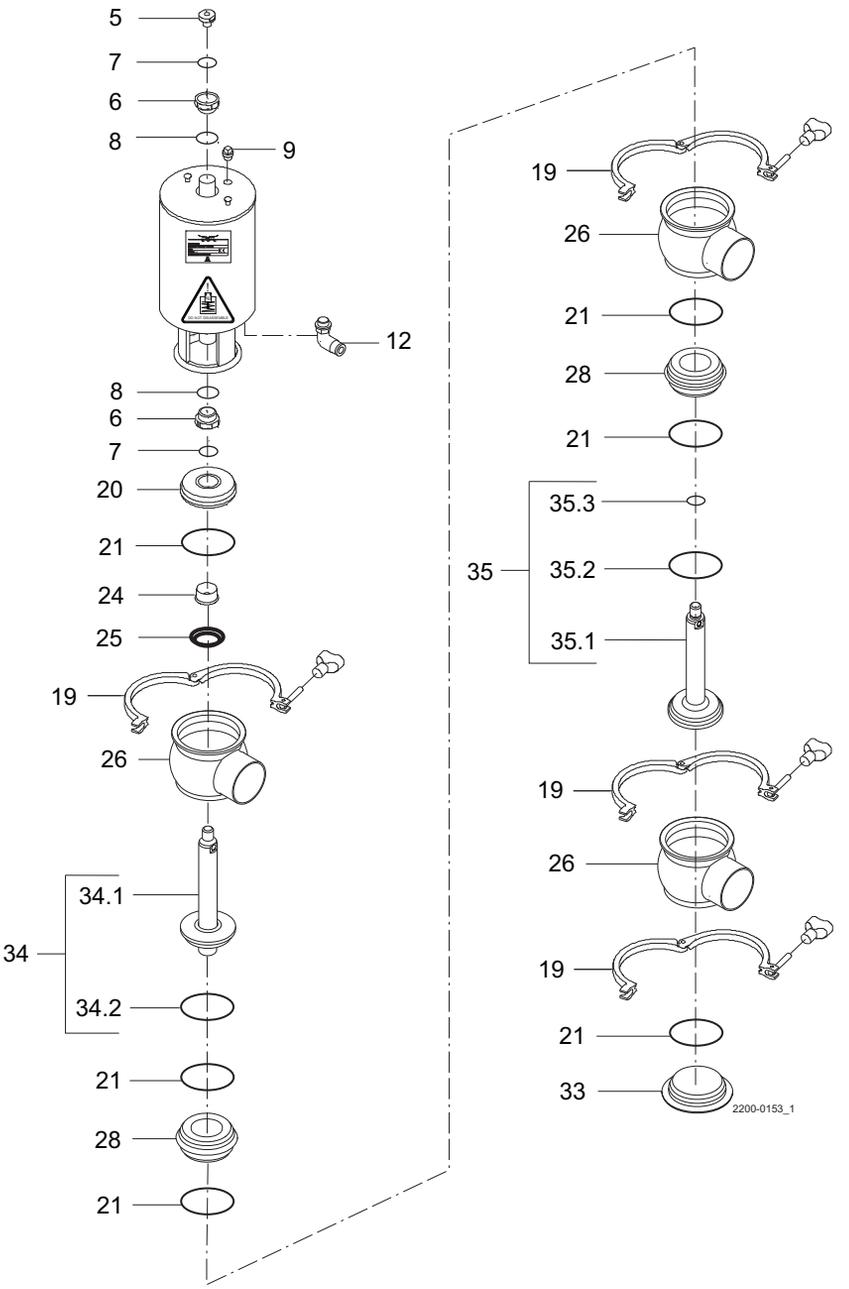
5
7
6
8
9
12
8
6
7
20
21
24
25
19
26
34
34.1
34.2
21
28
21
19
26
21
28
21
35
35.3
35.2
35.1
19
26
19
21
33
2200-0153_1

		1”	1½"	2"	2½"	3"	4"
□	Service kit, actuator	9611926500	9611926500	9611926500	9611926500	9611926500	9611926500
◆	Service kit, EPDM	9611926597	9611926598	9611926599	9611926600	9611926601	9611926602
◆	Service kit, HNBR	9611926603	9611926604	9611926605	9611926606	9611926607	9611926608
◆	Service kit, FPM	9611926609	9611926610	9611926611	9611926612	9611926613	9611926614

Parts marked with □ are included in the service kits (actuator).
Parts marked with • are included in the service kits (product wetted parts).

Recommended spare parts: Service kits.

TD 900365/3

If the actuator is marked with a danger warning do NOT attempt to cut the actuator open.



Do NOT attempt to disassemble the actuator due to spring under load danger.



Do NOT attempt to cut the actuator open, due to spring under load danger.

AND



Do NOT attempt to cut the actuator open, due to spring under load danger.

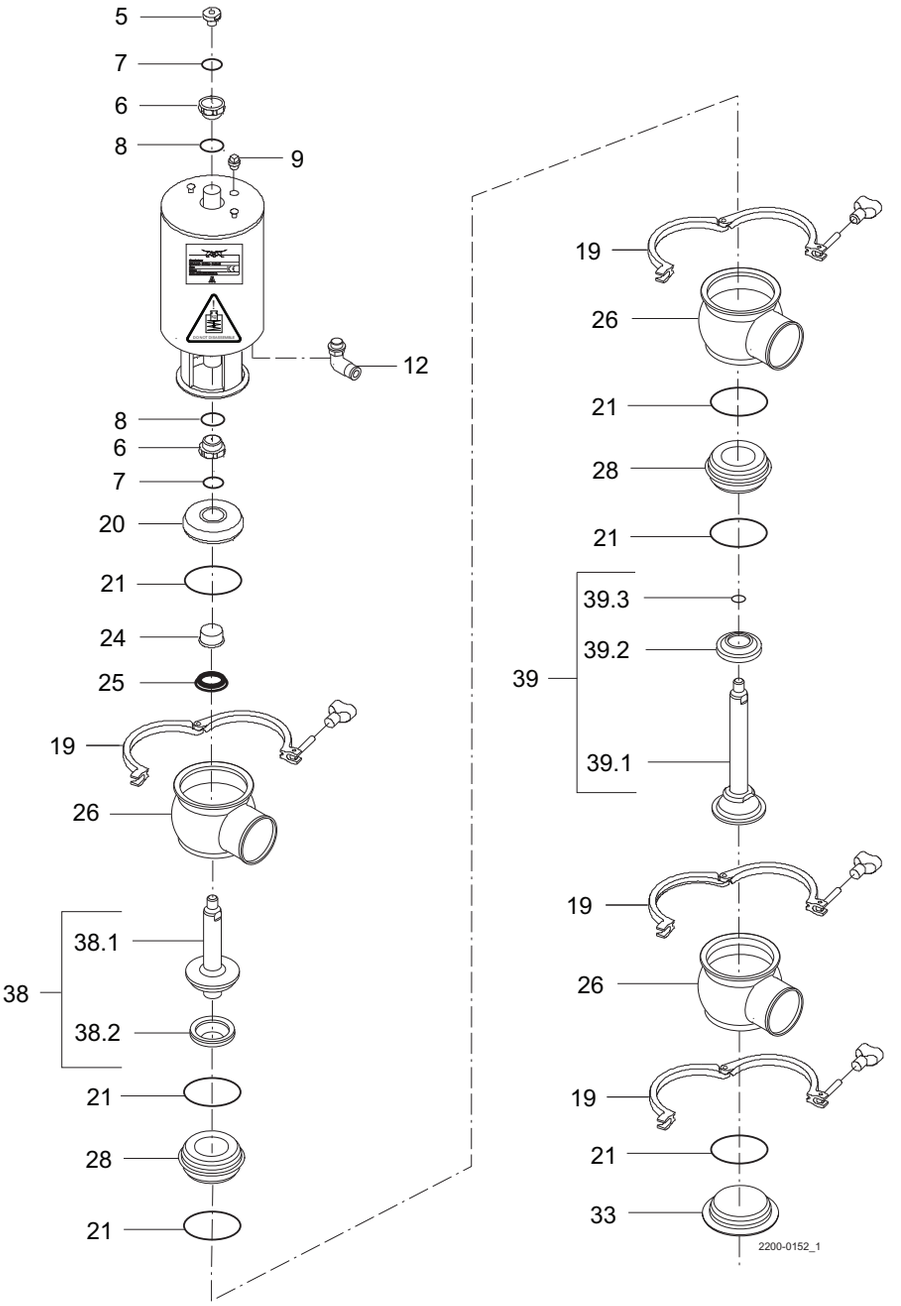

Pos		Qty	Denomination	1½"	2"	2½"	3"	4"
Actuator								
			Actuator, complete (NO-RA)	9613154836	9613163137	9613154838	9613154839	9613163140
			Actuator, complete (NC-RA)	9613154831	9613154832	9613154833	9613154834	9613154835
			Actuator, complete (A/A)	9613163141	9613163142	9613163143	9613163144	9613163145
5		1	Adapter, plastic (- 0115)					
		1	Adapter, steel (0115 - 0518)					
		1	Adapter, steel (0518 -)	9615374701	9615374701	9615374701	9615374701	9615374701
6	□	2	Bushing					
7	□	2	O-ring					
8	□	2	O-ring					
9		1	Plug	9613414101	9613414101	9613414101	9613414101	9613414101
12		1(2)	Air fitting	9611994682	9611994682	9611994682	9611994682	9611994682
Clamp								
19		4	Clamp	9612939316	9612939317	9612939318	9612939319	9612939320
Bonnet								
20		1	Bonnet	9613127102	9613127103	9613127104	9613127105	9613127106
21	♦	6	O-ring, EPDM (standard)					
	♦	6	O-ring, HNBR					
	♦	6	O-ring, FPM					
			O-ring, set (10 pcs.) EPDM	9614059422	9614059425	9614059428	9614059431	9614059434
			O-ring, set (10 pcs.) HNBR	9614059423	9614059426	9614059429	9614059432	9614059435
			O-ring, set (10 pcs.) FPM	9614059424	9614059427	9614059430	9614059433	9614059436
24		1	Bushing	9613125002	9613125002	9613125002	9613125002	9613125002
25	♦	1	Lip seal, EPDM (standard)					
	♦	1	Lip seal, HNBR					
	♦	1	Lip seal, FPM					
			Lip seal, set (10 pcs.) EPDM	9614059419	9614059419	9614059419	9614059419	9614059419
			Lip seal, set (10 pcs.) HNBR	9614059420	9614059420	9614059420	9614059420	9614059420
			Lip seal, set (10 pcs.) FPM	9614059421	9614059421	9614059421	9614059421	9614059421
33		1	Lower bonnet	9613130102	9613130103	9613130104	9613130105	9613130106
Seat								
28		2	Seat	9613127502	9613127503	9613127504	9613127505	9613127506
Valve Body								
26		3	Valve body, upper, 1 port, clamp	9613161503	9613161505	9613161507	9613161509	9613161511
		3	Valve body, upper, 2 ports, clamp	9613161504	9613161506	9613161508	9613161510	9613161512
		3	Valve body, upper, 1 port, welding ends	9613139315	9613139317	9613139319	9613139321	9613139323
		3	Valve body, upper, 2 ports, welding ends	9613139316	9613139318	9613139320	9613139322	9613139324
Valve Plug								
38		1	Plug, change over upper RA, complete	9613162702	9613162703	9613162704	9613162705	9613162706
38.1		1	Plug, change over upper RA	9613162902	9613162903	9613162904	9613162905	9613162906
38.2	♦	1	Plug seal, PTFE					
			Plug seal, set (10 pcs.) PTFE	9614059449	9614059450	9614059451	9614059452	9614059453
39		1	Plug, change over lower RA, complete	9613162802	9613162803	9613162804	9613162805	9613162806
39.1		1	Plug, change over lower RA	9613163002	9613163003	9613163004	9613163005	9613163006
39.2		1	Plug seal, PTFE					
			Plug seal, set (10 pcs.) PTFE	9614059449	9614059450	9614059451	9614059452	9614059453
39.3	♦	1	O-ring, EPDM (standard)					
	♦	1	O-ring, HNBR					
	♦	1	O-ring, FPM					
			O-ring, set (10 pcs.) EPDM	9614059443	9614059443	9614059443	9614059443	9614059443
			O-ring, set (10 pcs.) HNBR	9614059445	9614059445	9614059445	9614059445	9614059445
			O-ring, set (10 pcs.) FPM	9614059447	9614059447	9614059447	9614059447	9614059447

		1½"	2"	2½"	3"	4"
□	**Service kit, actuator**	**9611926500**	**9611926500**	**9611926500**	**9611926500**	**9611926500**
♦	**Service kit, EPDM**	**9611926663**	**9611926664**	**9611926665**	**9611926666**	**9611926667**
♦	**Service kit, HNBR**	**9611926668**	**9611926669**	**9611926670**	**9611926671**	**9611926672**
♦	**Service kit, FPM**	**9611926673**	**9611926674**	**9611926675**	**9611926676**	**9611926677**

Parts marked with □ are included in the service kits (actuator).
Parts marked with • are included in the service kits (product wetted parts).

Recommended spare parts: Service kits.

TD 900346/3

If the actuator is marked with a danger warning do NOT attempt to cut the actuator open.



Do NOT attempt to disassemble the actuator due to spring under load danger!



Do NOT attempt to cut the actuator open, due to spring under load danger!

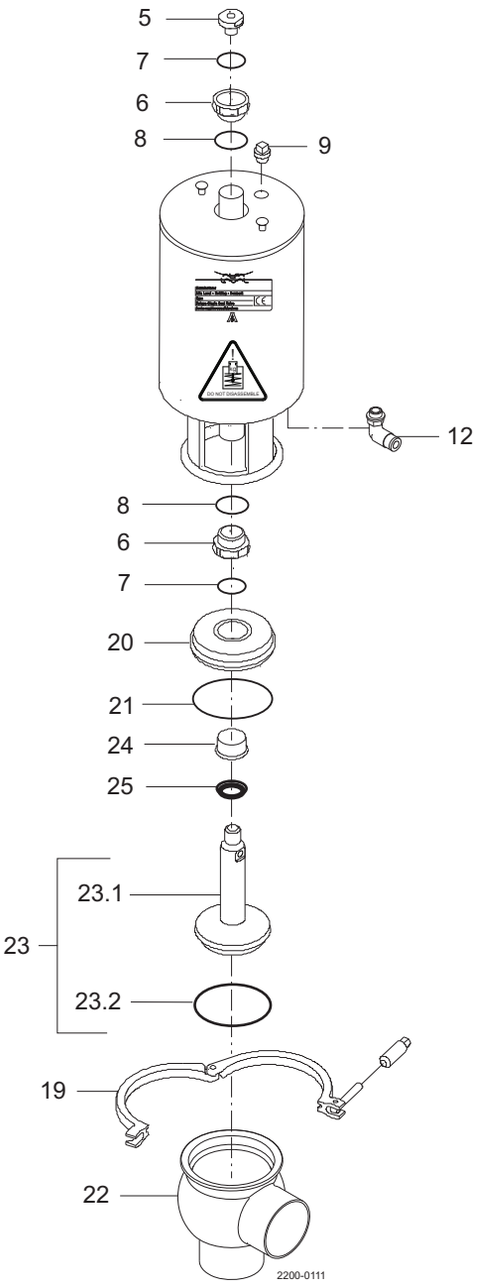

Pos		Qty	Denomination	DN 40 38 mm	DN 50 51 mm	DN 65 63.5 mm	DN 80 76.1 mm	DN 100 101.6 mm
Actuator								
			Actuator, complete (NO)	9613154816	9613154817	9613154818	9613154819	9613154820
			Actuator, complete (NC)	9613154821	9613154822	9613154823	9613154824	9613154825
			Actuator, complete (A/A)	9613154826	9613154827	9613154828	9613154829	9613154830
5		1	Adapter, plastic (- 0115)					
		1	Adapter, steel (0115 - 0518)					
		1	Adapter, steel (0518 -)	9615374701	9615374701	9615374701	9615374701	9615374701
6	□	2	Bushing					
7	□	2	O-ring					
8	□	2	O-ring					
9		1	Plug	9613414101	9613414101	9613414101	9613414101	9613414101
12		1(2)	Air fitting	9611991988	9611991988	9611991988	9611991988	9611991988
Clamp								
19		1	Clamp	9612939303	9612939304	9612939305	9612939306	9612939307
Bonnet								
20		1	Bonnet	9613127102	9613127103	9613127104	9613127105	9613127106
21	♦	1	O-ring, EPDM (standard)					
		1	O-ring, HNBR					
		1	O-ring, FPM					
			O-ring set (10 pcs.) EPDM	9614059422	9614059425	9614059428	9614059431	9614059434
			O-ring set (10 pcs.) HNBR	9614059423	9614059426	9614059429	9614059432	9614059435
			O-ring set (10 pcs.) FPM	9614059424	9614059427	9614059430	9614059433	9614059436
24		1	Bushing	9613125002	9613125002	9613125002	9613125002	9613125002
25	♦	1	Lip seal, EPDM (standard)					
		1	Lip seal, HNBR					
		1	Lip seal, FPM					
			Lip seal set (10 pcs.) EPDM	9614059419	9614059419	9614059419	9614059419	9614059419
			Lip seal set (10 pcs.) HNBR	9614059420	9614059420	9614059420	9614059420	9614059420
			Lip seal set (10 pcs.) FPM	9614059421	9614059421	9614059421	9614059421	9614059421
Valve body								
22		1	Valve body, lower, 2 ports ISO	9613139503	9613139505	9613139507	9613139509	9613139511
		1	Valve body, lower, 3 ports ISO	9613139504	9613139506	9613139508	9613139510	9613139512
		1	Valve body, lower, 2 ports DIN	9613139603	9613139605	9613139607	9613139609	9613139611
		1	Valve body, lower, 3 ports DIN	9613139604	9613139606	9613139608	9613139610	9613139612
Valve plug								
23		1	Plug, shut-off, ISO/DIN comp., EPDM (std)	9613161902	9613161903	9613161904	9613161905	9613138806
		1	Plug, shut-off, ISO/DIN comp., HNBR	9613161908	9613161909	9613161910	9613161911	9613138818
		1	Plug, shut-off, ISO/DIN comp., FPM	9613161914	9613161915	9613161916	9613161917	9613138830
23.1		1	Plug, shut-off, ISO/DIN	9613159001	9613159101	9613159201	9613159301	9613139806
23.2	♦	1	Plug seal, EPDM (standard)					
		1	Plug seal, HNBR					
		1	Plug seal, FPM					
			Plug seal set (10 pcs.) EPDM	9614059404	9614059407	9614059410	9614059413	9614059416
			Plug seal set (10 pcs.) HNBR	9614059405	9614059408	9614059411	9614059414	9614059417
			Plug seal set (10 pcs.) FPM	9614059406	9614059409	9614059412	9614059415	9614059418

		DN 40 38 mm	DN 50 51 mm	DN 65 63.5 mm	DN 80 76.1 mm	DN 100 101.6 mm
Service kit for actuator						
□	**Service kit**	**9611926500**	**9611926500**	**9611926500**	**9611926500**	**9611926500**
Service kit for product wetted parts, standard						
♦	**Service kit, EPDM**	**9611926502**	**9611926503**	**9611926504**	**9611926505**	**9611926506**
♦	**Service kit, HNBR**	**9611926508**	**9611926509**	**9611926510**	**9611926511**	**9611926512**
♦	**Service kit, FPM**	**9611926514**	**9611926515**	**9611926516**	**9611926517**	**9611926518**

Parts marked with □♦ are included in the service kits.

Recommended spare parts: Service kits.

TD 900-334/1

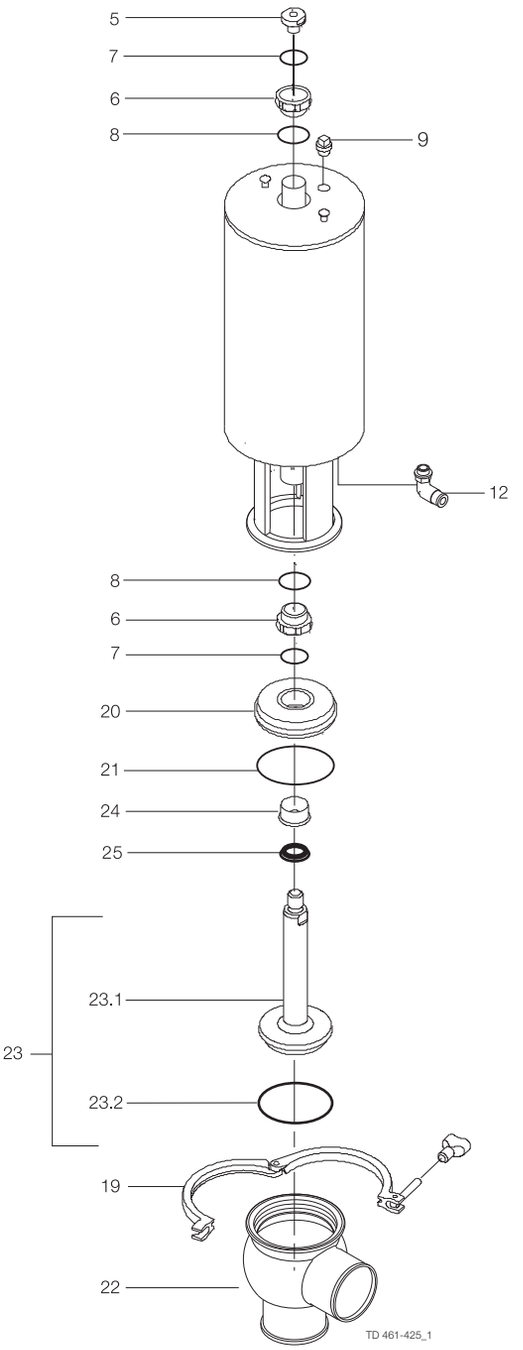
5
7
6
8
9
12
8
6
7
20
21
24
25
23
23.1
23.2
19
22
TD 461-425_1

Pos		Qty	Denomination	1½"	2"	2½"	3"	4"
Actuator								
			Actuator, complete (NO)	9613154846	9613154847	9613154848	9613154849	9613154850
			Actuator, complete (NC)	9613154851	9613154852	9613154853	9613154854	9613154855
			Actuator, complete (A/A)	9613154856	9613154857	9613154858	9613154859	9613154860
5		1	Adapter, plastic (- 0115)					
		1	Adapter, steel (0115 - 0518)					
		1	Adapter, steel (0518 -)	9615344701	9615344701	9615344701	9615344701	9615344701
6	□	2	Bushing					
7	□	2	O-ring					
8	□	2	O-ring					
9		1	Plug	9613414101	9613414101	9613414101	9613414101	9613414101
12		1(2)	Air fitting	9611994682	9611994682	9611994682	9611994682	9611994682
Clamp								
19		1	Clamp	9612939316	9612939317	9612939318	9612939319	9612939320
Bonnet								
20		1	Bonnet	9613127102	9613127103	9613127104	9613127105	9613127106
21	♦	1	O-ring, EPDM (standard)					
		1	O-ring, HNBR					
		1	O-ring, FPM					
24		1	Bushing	9613125002	9613125002	9613125002	9613125002	9613125002
25	♦	1	Lip seal, EPDM (standard)					
		1	Lip seal, HNBR					
		1	Lip seal, FPM					
Valve Body								
22		1	Valve body, lower, 2 ports, clamp	9613161603	9613161605	9613161607	9613161609	9613161611
		1	Valve body, lower, 3 ports, clamp	9613161604	9613161606	9613161608	9613161610	9613161612
		1	Valve body, lower, 2 ports, welding ends	9613139515	9613139517	9613139519	9613139521	9613139523
		1	Valve body, lower, 3 ports, welding ends	9613139516	9613139518	9613139520	9613139522	9613139524
Valve Plug								
23		1	Plug, shut-off, complete, EPDM (standard)	9613161902	9613161903	9613161904	9613161905	9613138806
		1	Plug, shut-off, complete, HNBR	9613161908	9613161909	9613161910	9613161911	9613138818
		1	Plug, shut-off, complete, FPM	9613161914	9613161915	9613161916	9613161917	9613138830
23.1		1	Plug, shut-off	9613159001	9613159101	9613159201	9613159301	9613139806
23.2	♦	1	Plug seal, EPDM (standard)					
		1	Plug seal, HNBR					
		1	Plug seal, FPM					

		1½"	2"	2½"	3"	4"
Actuator						
□	**Service kit**	**9611926500**	**9611926500**	**9611926500**	**9611926500**	**9611926500**
Product wetted parts						
♦	**Service kit, EPDM**	**9611926502**	**9611926503**	**9611926504**	**9611926505**	**9611926506**
♦	**Service kit, HNBR**	**9611926508**	**9611926509**	**9611926510**	**9611926511**	**9611926512**
♦	**Service kit, FPM**	**9611926514**	**9611926515**	**9611926516**	**9611926517**	**9611926518**

Parts marked with □ are included in the service kits (actuator).
Parts marked with • are included in the service kits (product wetted parts).

Recommended spare parts: Service kits.

TD 900364/2

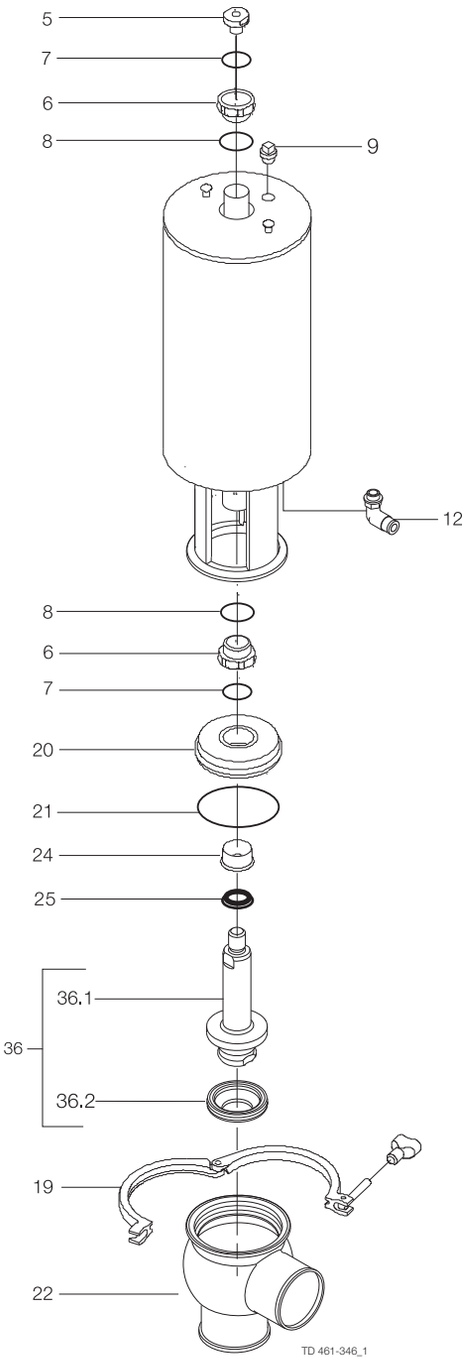
5
7
6
8
9
12
8
6
7
20
21
24
25
36
36.1
36.2
19
22
TD 461-346_1

Pos		Qty	Denomination	1½"	2"	2½"	3"	4"
Actuator								
			Actuator, complete (NO)	9613154846	9613154847	9613154848	9613154849	9613154850
			Actuator, complete (NC)	9613154851	9613154852	9613154853	9613154854	9613154855
			Actuator, complete (A/A)	9613154856	9613154857	9613154858	9613154859	9613154860
5		1	Adapter, plastic (- 0115)					
		1	Adapter, steel (0115 - 0518)					
		1	Adapter, steel (0518 -)	9615374701	9615374701	9615374701	9615374701	9615374701
6	□	2	Bushing					
7	□	2	O-ring					
8	□	2	O-ring					
9		1	Plug	9613414101	9613414101	9613414101	9613414101	9613414101
12		1(2)	Air fitting	9611994682	9611994682	9611994682	9611994682	9611994682
Clamp								
19		1	Clamp	9612939316	9612939317	9612939318	9612939319	9612939320
Bonnet								
20		1	Bonnet	9613127102	9613127103	9613127104	9613127105	9613127106
21	♦	1	O-ring, EPDM (standard)					
		1	O-ring, HNBR					
		1	O-ring, FPM					
24		1	Bushing	9613125002	9613125002	9613125002	9613125002	9613125002
25	♦	1	Lip seal, EPDM (standard)					
		1	Lip seal, HNBR					
		1	Lip seal, FPM					
Valve Body								
22		1	Valve body, lower, 2 ports, clamp	9613161603	9613161605	9613161607	9613161609	9613161611
		1	Valve body, lower, 3 ports, clamp	9613161604	9613161606	9613161608	9613161610	9613161612
		1	Valve body, lower, 2 ports, welding ends	9613139515	9613139517	9613139519	9613139521	9613139523
		1	Valve body, lower, 3 ports, welding ends	9613139516	9613139518	9613139520	9613139522	9613139524
Valve Plug								
36		1	Plug, shut-off, complete	9613161702	9613161703	9613161704	9613161705	9613155806
36.1		1	Plug, shut-off	9613155201	9613147501	9613147601	9613147701	9613151105
36.2	♦	1	Plug seal, PTFE					

		1½"	2"	2½"	3"	4"
Actuator						
□	Service kit	9611926500	9611926500	9611926500	9611926500	9611926500
Product wetted parts						
♦	Service kit, EPDM	9611926561	9611926562	9611926563	9611926564	9611926565
♦	Service kit, HNBR	9611926566	9611926567	9611926568	9611926569	9611926570
♦	Service kit, FPM	9611926571	9611926572	9611926573	9611926574	9611926575

Parts marked with □ are included in the service kits (actuator).
Parts marked with • are included in the service kits (product wetted parts).

Recommended spare parts: Service kits.

TD 900338/2

If the actuator is marked with a danger warning do NOT attempt to cut the actuator open.



Do NOT attempt to disassemble the actuator due to spring under load danger!



Do NOT attempt to cut the actuator open, due to spring under load danger!

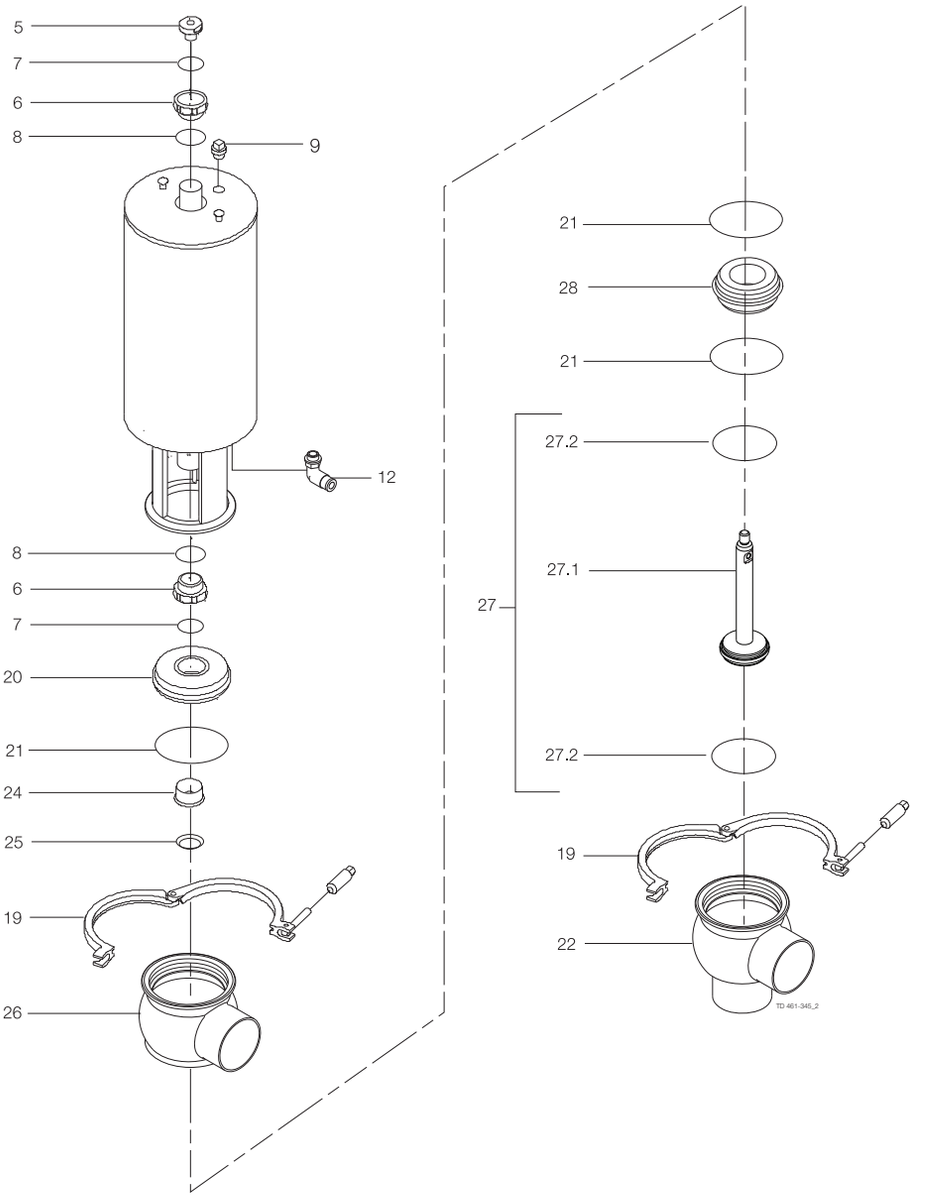

Pos		Qty	Denomination	DN 40 38 mm	DN 50 51 mm	DN 65 63.5 mm	DN 80 76.1 mm	DN 100 101.6 mm
Actuator								
			Actuator, complete (NO)	9613154816	9613154817	9613154818	9613154819	9613154820
			Actuator, complete (NC)	9613154821	9613154822	9613154823	9613154824	9613154825
			Actuator, complete (A/A)	9613154826	9613154827	9613154828	9613154829	9613154830
5		1	Adapter, plastic (- 0115)					
		1	Adapter, steel (0115 - 0518)					
		1	Adapter, steel (0518 -)	9615374701	9615374701	9615374701	9615374701	9615374701
6	□	2	Bushing					
7	□	2	O-ring					
8	□	2	O-ring					
9		1	Plug	9613414101	9613414101	9613414101	9613414101	9613414101
12		1(2)	Air fitting	9611991988	9611991988	9611991988	9611991988	9611991988
Clamp								
19		2	Clamp	9612939303	9612939304	9612939305	9612939306	9612939307
Bonnet								
20		1	Bonnet	9613127102	9613127103	9613127104	9613127105	9613127106
21	♦	3	O-ring, EPDM (standard)					
		3	O-ring, HNBR					
		3	O-ring, FPM					
			O-ring set (10 pcs.) EPDM	9614059422	9614059425	9614059428	9614059431	9614059434
			O-ring set (10 pcs.) HNBR	9614059423	9614059426	9614059429	9614059432	9614059435
			O-ring set (10 pcs.) FPM	9614059424	9614059427	9614059430	9614059433	9614059436
24		1	Bushing	9613125002	9613125002	9613125002	9613125002	9613125002
25	♦	1	Lip seal, EPDM (standard)					
		1	Lip seal, HNBR					
		1	Lip seal, FPM					
			Lip seal set (10 pcs.) EPDM	9614059419	9614059419	9614059419	9614059419	9614059419
			Lip seal set (10 pcs.) HNBR	9614059420	9614059420	9614059420	9614059420	9614059420
			Lip seal set (10 pcs.) FPM	9614059421	9614059421	9614059421	9614059421	9614059421
28		1	Seat	9613127502	9613127503	9613127504	9613127505	9613127506
Valve body								
26		1	Valve body, upper, 1 port ISO	9613139303	9613139305	9613139307	9613139309	9613139311
		1	Valve body, upper, 2 ports ISO	9613139304	9613139306	9613139308	9613139310	9613139312
		1	Valve body, upper, 1 port DIN	9613139403	9613139405	9613139407	9613139409	9613139411
		1	Valve body, upper, 2 ports DIN	9613139404	9613139406	9613139408	9613139410	9613139412
22		1	Valve body, lower, 2 ports ISO	9613139503	9613139505	9613139507	9613139509	9613139511
		1	Valve body, lower, 3 ports ISO	9613139504	9613139506	9613139508	9613139510	9613139512
		1	Valve body, lower, 2 ports DIN	9613139603	9613139605	9613139607	9613139609	9613139611
		1	Valve body, lower, 3 ports DIN	9613139604	9613139606	9613139608	9613139610	9613139612
Valve plug								
27		1	Plug, change-over, ISO/DIN comp., EPDM (std)	9613162002	9613162003	9613162004	9613162005	9613162006
		1	Plug, change-over, ISO/DIN comp., HNBR	9613162008	9613162009	9613162010	9613162011	9613162012
		1	Plug, change-over, ISO/DIN comp., FPM	9613162014	9613162015	9613162016	9613162017	9613162018
27.1		1	Plug, change-over, ISO/DIN	9613159401	9613159501	9613159601	9613159701	9613159801
27.2	♦	2	Plug seal, EPDM (standard)					
		2	Plug seal, HNBR					
		2	Plug seal, FPM					
			Plug seal set (10 pcs.) EDPM	9614059404	9614059407	9614059410	9614059413	9614059416
			Plug seal set (10 pcs.) HNBR	9614059405	9614059408	9614059411	9614059414	9614059417
			Plug seal set (10 pcs.) FPM	9614059406	9614059409	9614059412	9614059415	9614059418

		DN 40 38 mm	DN 50 51 mm	DN 65 63.5 mm	DN 80 76.1 mm	DN 100 101.6 mm
Service kit for actuator						
□	**Service kit**	**9611926500**	**9611926500**	**9611926500**	**9611926500**	**9611926500**
Service kit for product wetted parts, standard						
♦	**Service kit, EPDM**	**9611926580**	**9611926581**	**9611926582**	**9611926583**	**9611926584**
♦	**Service kit, HNBR**	**9611926586**	**9611926587**	**9611926588**	**9611926589**	**9611926590**
♦	**Service kit, FPM**	**9611926592**	**9611926593**	**9611926594**	**9611926595**	**9611926596**

Parts marked with □♦ are included in the service kits.
Recommended spare parts: Service kits.

TD 900-334/1

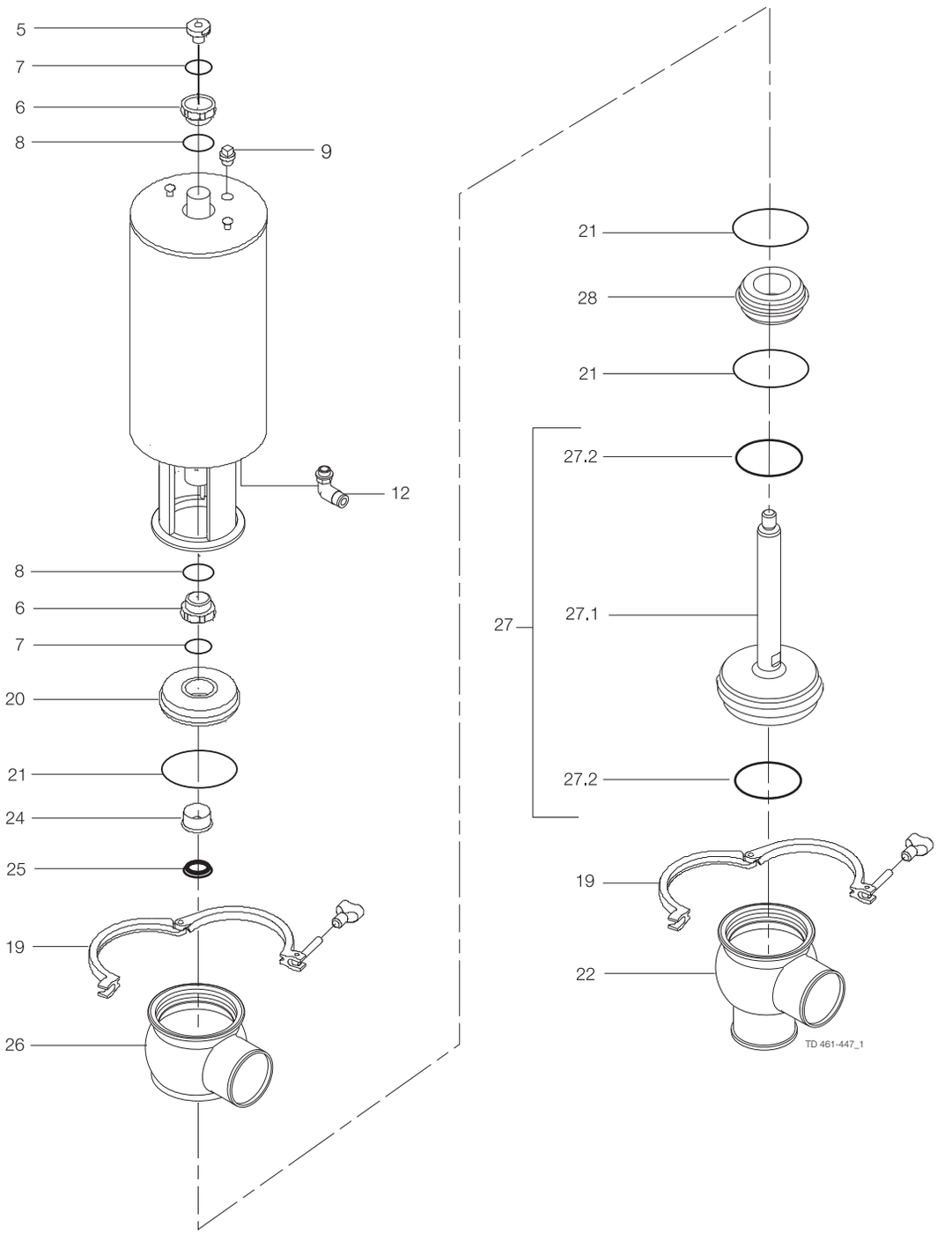
5
7
6
8
9
12
8
6
7
20
21
24
25
19
26
21
28
21
27.2
27
27.1
27.2
19
22
TD 461-447_1

Pos		Qty	Denomination	1½"	2"	2½"	3"	4"
Actuator								
			Actuator, complete (NO)	9613154846	9613154847	9613154848	9613154849	9613154850
			Actuator, complete (NC)	9613154851	9613154852	9613154853	9613154854	9613154855
		0	Actuator, complete (A/A)	9613154856	9613154857	9613154858	9613154859	9613154860
5		1	Adapter, plastic (- 0115)	9613127401	9613127401	9613127401	9613127401	9613127401
		1	Adapter, steel (0115 - 0518)	9614065301	9614065301	9614065301	9614065301	9614065301
		1	Adapter, steel (0518 -)	9615374701	9615374701	9615374701	9615374701	9615374701
6	□	2	Bushing					
7	□	2	O-ring					
8	□	2	O-ring					
9		1	Plug	9613414101	9613414101	9613414101	9613414101	9613414101
12		1(2)	Air fitting	9611994682	9611994682	9611994682	9611994682	9611994682
Clamp								
19		2	Clamp	9612939316	9612939317	9612939318	9612939319	9612939320
Bonnet								
20		1	Bonnet	9613127102	9613127103	9613127104	9613127105	9613127106
21	♦	3	O-ring, EPDM (standard)					
		3	O-ring, HNBR					
		3	O-ring, FPM					
24		1	Bushing	9613125002	9613125002	9613125002	9613125002	9613125002
25	♦	1	Lip seal, EPDM (standard)					
		1	Lip seal, HNBR					
		1	Lip seal, FPM					
Seat								
28		1	Seat	9613127502	9613127503	9613127504	9613127505	9613127506
Valve Body								
26		1	Valve body, upper, 1 ports, clamp	9613161503	9613161505	9613161507	9613161509	9613161511
		1	Valve body, upper, 2 ports, clamp	9613161504	9613161506	9613161508	9613161510	9613161512
		1	Valve body, upper, 1 ports, welding ends	9613139315	9613139317	9613139319	9613139321	9613139323
		1	Valve body, upper, 2 ports, welding ends	9613139316	9613139318	9613139320	9613139322	9613139324
22		1	Valve body, lower, 2 ports, clamp	9613161603	9613161605	9613161607	9613161609	9613161611
		1	Valve body, lower, 3 ports, clamp	9613161604	9613161606	9613161608	9613161610	9613161612
		1	Valve body, lower, 2 ports, welding ends	9613139515	9613139517	9613139519	9613139521	9613139523
		1	Valve body, lower, 3 ports, welding ends	9613139516	9613139518	9613139520	9613139522	9613139524
Valve Plug								
27		1	Plug, change-over, complete, EPDM (standard)	9613162002	9613162003	9613162004	9613162005	9613162006
		1	Plug, change-over, complete, HNBR	9613162008	9613162009	9613162010	9613162011	9613162012
		1	Plug, change-over, complete, FPM	9613162014	9613162015	9613162016	9613162017	9613162018
27.1		1	Plug, change-over	9613159401	9613159501	9613159601	9613159701	9613159801
27.2	♦	2	Plug seal, EPDM (standard)					
		2	Plug seal, HNBR					
		2	Plug seal, FPM					

		1½"	2"	2½"	3"	4"
Actuator						
□	**Service kit**	**9611926500**	**9611926500**	**9611926500**	**9611926500**	**9611926500**
Product wetted parts						
♦	**Service kit, EPDM**	**9611926580**	**9611926581**	**9611926582**	**9611926583**	**9611926584**
♦	**Service kit, HNBR**	**9611926586**	**9611926587**	**9611926588**	**9611926589**	**9611926590**
♦	**Service kit, FPM**	**9611926592**	**9611926593**	**9611926594**	**9611926595**	**9611926596**

Parts marked with □ are included in the service kits (actuator).
Parts marked with • are included in the service kits (product wetted parts).

Recommended spare parts: Service kits.

TD 900364/2

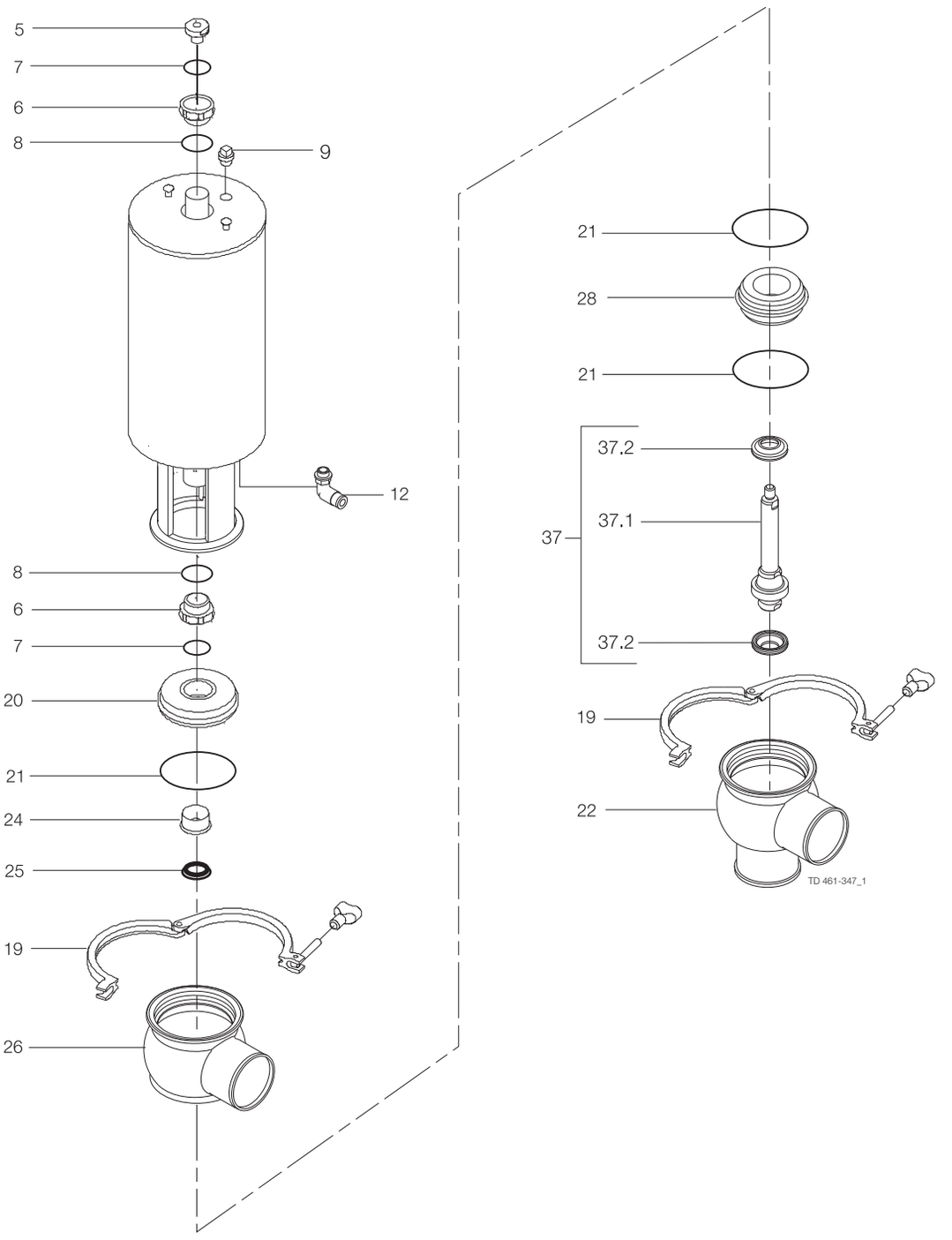
5
7
6
8
9
12
8
6
7
20
21
24
25
19
26
21
28
21
37.2
37
37.1
37.2
19
22
TD 461-347_1

Pos		Qty	Denomination	1½"	2"	2½"	3"	4"
Actuator								
			Actuator, complete (NO)	9613154846	9613154847	9613154848	9613154849	9613154850
			Actuator, complete (NC)	9613154851	9613154852	9613154853	9613154854	9613154855
			Actuator, complete (A/A)	9613154856	9613154857	9613154858	9613154859	9613154860
5		1	Adapter, plastic (- 0115)					
		1	Adapter, steel (0115 - 0518)					
		1	Adapter, steel (0518 -)	9615344701	9615344701	9615344701	9615344701	9615344701
6	□	2	Bushing					
7	□	2	O-ring					
8	□	2	O-ring					
9		1	Plug	9613414101	9613414101	9613414101	9613414101	9613414101
12		1(2)	Air fitting	9611994682	9611994682	9611994682	9611994682	9611994682
Clamp								
19		2	Clamp	9612939316	9612939317	9612939318	9612939319	9612939320
Bonnet								
20		1	Bonnet	9613127102	9613127103	9613127104	9613127105	9613127106
21	♦	3	O-ring, EPDM (standard)					
		3	O-ring, HNBR					
		3	O-ring, FPM					
24		1	Bushing	9613125002	9613125002	9613125002	9613125002	9613125002
25	♦	1	Lip seal, EPDM (standard)					
		1	Lip seal, HNBR					
		1	Lip seal, FPM					
Seat								
28		1	Seat	9613127502	9613127503	9613127504	9613127505	9613127506
Valve Body								
26		1	Valve body, upper, 1 ports, clamp	9613161503	9613161505	9613161507	9613161509	9613161511
		1	Valve body, upper, 2 ports, clamp	9613161504	9613161506	9613161508	9613161510	9613161512
		1	Valve body, upper, 1 ports, welding ends	9613139315	9613139317	9613139319	9613139321	9613139323
		1	Valve body, upper, 2 ports, welding ends	9613139316	9613139318	9613139320	9613139322	9613139324
22		1	Valve body, lower, 2 ports, clamp	9613161603	9613161605	9613161607	9613161609	9613161611
		1	Valve body, lower, 3 ports, clamp	9613161604	9613161606	9613161608	9613161610	9613161612
		1	Valve body, lower, 2 ports, welding ends	9613139515	9613139517	9613139519	9613139521	9613139523
		1	Valve body, lower, 3 ports, welding ends	9613139516	9613139518	9613139520	9613139522	9613139524
Valve Plug								
37		1	Plug, change-over, complete	9613161802	9613161803	9613161804	9613161805	9613161806
37.1		1	Plug, change-over	9613157501	9613157601	9613157701	9613157801	9613157901
37.2	♦	2	Plug seal, PTFE					

		1½"	2"	2½"	3"	4"
Actuator						
□	**Service kit**	**9611926500**	**9611926500**	**9611926500**	**9611926500**	**9611926500**
Product wetted parts						
♦	**Service kit, EPDM**	**9611926633**	**9611926634**	**9611926635**	**9611926636**	**9611926637**
♦	**Service kit, HNBR**	**9611926638**	**9611926639**	**9611926640**	**9611926641**	**9611926642**
♦	**Service kit, FPM**	**9611926643**	**9611926644**	**9611926645**	**9611926646**	**9611926647**

Parts marked with □ are included in the service kits (actuator).
Parts marked with • are included in the service kits (product wetted parts)

Recommended spare parts: Service kits.

TD 900338/2

If the actuator is marked with a danger warning do NOT attempt to cut the actuator open.



Do NOT attempt to disassemble the actuator due to spring under load danger!



Do NOT attempt to cut the actuator open, due to spring under load danger!

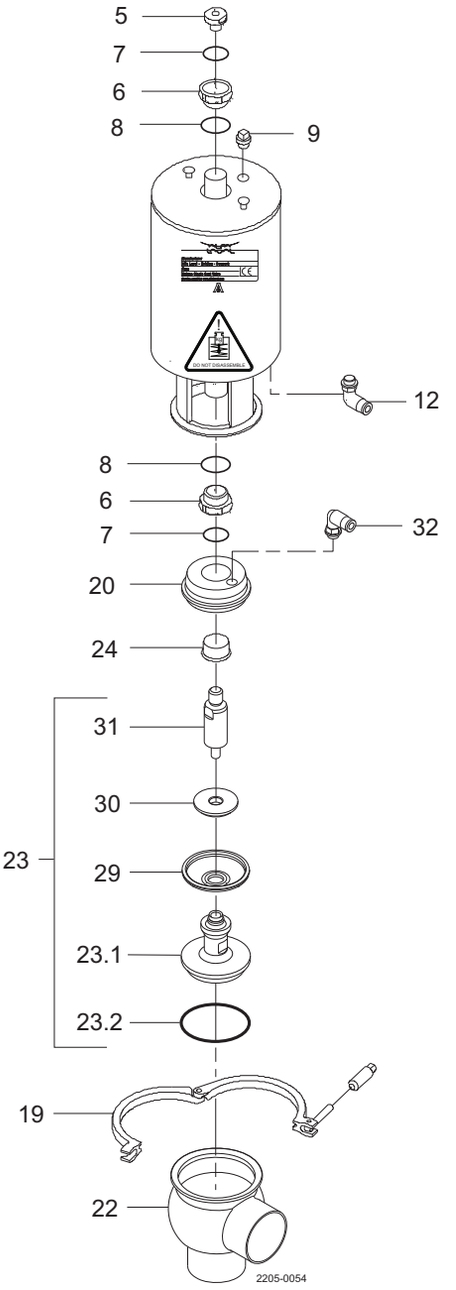

Pos		Qty	Denomination	DN 25 25 mm	DN 40 38 mm	DN 50 51 mm	DN 65 63.5 mm	DN 80 76.1 mm	DN 100 101.6 mm
Actuator									
			Actuator, complete (NO)	9613154801	9613154801	9613154802	9613154803	9613154804	9613154805
			Actuator, complete (NC)	9613154806	9613154806	9613154807	9613154808	9613154809	9613154810
			Actuator, complete (A/A)	9613154811	9613154811	9613154812	9613154813	9613154814	9613154815
5		1	Adapter, plastic (- 0115)						
		1	Adapter, steel (0115 - 0518)						
		1	Adapter, steel (0518 -)	9615344701	9615344701	9615344701	9615344701	9615344701	9615344701
6	□	2	Bushing						
7	□	2	O-ring						
8	□	2	O-ring						
9		1	Plug	9613414101	9613414101	9613414101	9613414101	9613414101	9613414101
12		1(2)	Air fitting	9611991988	9611991988	9611991988	9611991988	9611991988	9611991988
Clamp									
19		1	Clamp	9612939303	9612939303	9612939304	9612939305	9612939306	9612939307
Bonnet									
20		1	Bonnet	9613142701	9613142701	9613142801	9613142901	9613143001	9613143101
24		1	Bushing	9613125002	9613125002	9613125002	9613125002	9613125002	9613125002
Valve Body									
22		1	Valve body, 2 ports ISO	9613139501	9613139503	9613139505	9613139507	9613139509	9613139511
		1	Valve body, 3 ports ISO	9613139502	9613139504	9613139506	9613139508	9613139510	9613139512
		1	Valve body, 2 ports DIN	9613139601	9613139603	9613139605	9613139607	9613139609	9613139611
		1	Valve body, 3 ports DIN	9613139602	9613139604	9613139606	9613139608	9613139610	9613139612
Valve Plug									
23		1	Plug, shut-off, ISO, complete, EPDM (standard)	9613159901	9613159902	9613159903	9613159904	9613159905	9613159906
		1	Plug, shut-off, ISO, complete, HNBR	9613159913	9613159914	9613159915	9613159916	9613159917	9613159918
		1	Plug, shut-off, ISO, complete, FPM	9613159925	9613159926	9613159927	9613159928	9613159929	9613159930
		1	Plug, shut-off, DIN, complete, EPDM (standard)	9613159907	9613159908	9613159909	9613159910	9613159911	9613159912
		1	Plug, shut-off, DIN, complete, HNBR	9613159919	9613159920	9613159921	9613159922	9613159923	9613159924
		1	Plug, shut-off, DIN, complete, FPM	9613159931	9613159932	9613159933	9613159934	9613159935	9613159936
23.1		1	Plug, shut-off, ISO	9613143501	9613144501	9613143401	9613143402	9613143403	9613143404
		1	Plug, shut-off, DIN	9613143502	9613144502	9613143405	9613143406	9613143407	9613143408
23.2	♦	1	Plug seal, EPDM (standard)						
		1	Plug seal, HNBR						
		1	Plug seal, FPM						
			Plug seal set (10 pcs.) EPDM	9614059401	9614059404	9614059407	9614059410	9614059413	9614059416
			Plug seal set (10 pcs.) HNBR	9614059402	9614059405	9614059408	9614059411	9614059414	9614059417
			Plug seal set (10 pcs.) FPM	9614059403	9614059406	9614059409	9614059412	9614059415	9614059418
29	♦	1	Diaphragm						
			Diaphragm set (10 pcs.)	9614059437	9614059437	9614059438	9614059439	9614059440	9614059441
30		1	Disc for diaphragm	9613144001	9613144001	9613144101	9613144201	9613144301	9613144301
31		1	Upper spindle	9613144601	9613144601	9613143302	9613143302	9613143301	9613143301
32		1	Air fitting	9611994877	9611994877	9611991988	9611991988	9611991988	9611991988

	DN 25 25 mm	DN 40 38 mm	DN 50 51 mm	DN 65 63.5 mm	DN 80 76.1 mm	DN 100 101.6 mm
Service kit for actuator						
□ Service kit	9611926500	9611926500	9611926500	9611926500	9611926500	9611926500
Service kit for product wetted parts, standard						
♦ Service kit, EPDM	9611926543	9611926544	9611926545	9611926546	9611926547	9611926548
♦ Service kit, HNBR	9611926549	9611926550	9611926551	9611926552	9611926553	9611926554
♦ Service kit, FPM	9611926555	9611926556	9611926557	9611926558	9611926559	9611926560

Parts marked with □♦ are included in the service kits.

Recommended spare parts: Service kits.

TD 900-354/5

If the actuator is marked with a danger warning do NOT attempt to cut the actuator open.



Do NOT attempt to disassemble the actuator due to spring under load danger.



Do NOT attempt to cut the actuator open, due to spring under load danger.

AND



Do NOT attempt to cut the actuator open, due to spring under load danger.

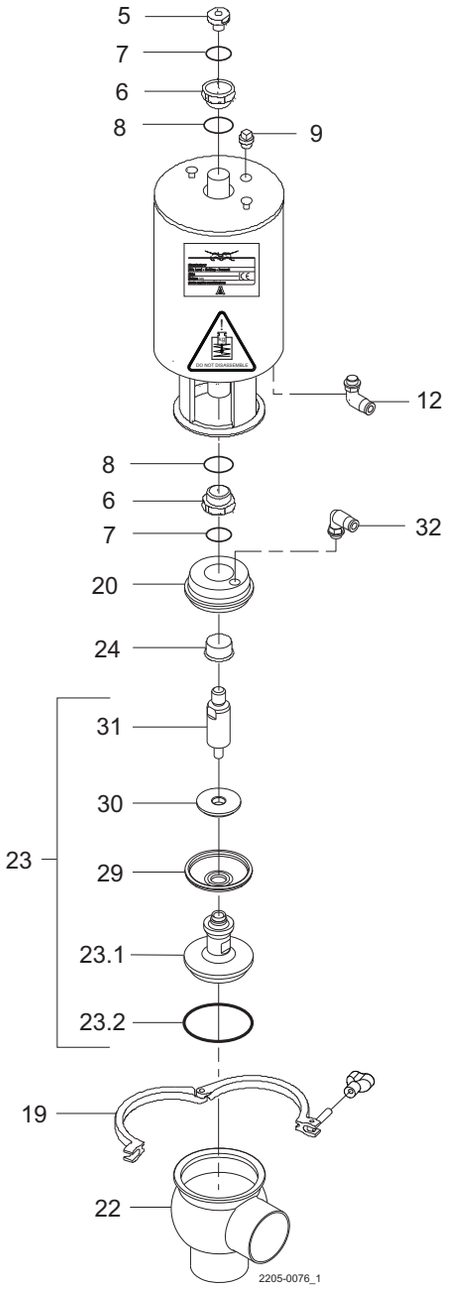

Pos		Qty	Denomination	1"	1½"	2"	2½"	3"	4"
Actuator									
			Actuator, complete (NO)	9613154831	9613154831	9613154832	9613154833	9613154834	9613154835
			Actuator, complete (NC)	9613154836	9613154836	9613163137	9613154838	9613154839	9613163140
			Actuator, complete (A/A)	9613163141	9613163141	9613163142	9613163143	9613163144	9613163145
5		1	Adapter, plastic (- 0115)						
		1	Adapter, steel (0115 - 0518)						
		1	Adapter, steel (0518 -)	9615374701	9615374701	9615374701	9615374701	9615374701	9615374701
6	□	2	Bushing						
7	□	2	O-ring						
8	□	2	O-ring						
9		1	Plug	9613414101	9613414101	9613414101	9613414101	9613414101	9613414101
12		1(2)	Air fitting	9611994682	9611994682	9611994682	9611994682	9611994682	9611994682
Clamp									
19		1	Clamp	9612939316	9612939316	9612939317	9612939318	9612939319	9612939320
Bonnet									
20		1	Bonnet	9613142701	9613142701	9613142801	9613142901	9613143001	9613143101
24		1	Bushing	9613125002	9613125002	9613125002	9613125002	9613125002	9613125002
Valve body									
22		1	Valve body, lower, 2 ports, clamp	9613161601	9613161603	9613161605	9613161607	9613161609	9613161611
		1	Valve body, lower, 3 ports, clamp	9613161602	9613161604	9613161606	9613161608	9613161610	9613161612
		1	Valve body, lower, 2 ports, welding ends	9613139513	9613139515	9613139517	9613139519	9613139521	9613139523
		1	Valve body, lower, 3 ports, welding ends	9613139514	9613139516	9613139518	9613139520	9613139522	9613139524
Valve plug									
23		1	Plug, shut-off, complete, EPDM (standard)	9613159901	9613159902	9613159903	9613159904	9613159905	9613159906
		1	Plug, shut-off, complete, HNBR	9613159913	9613159914	9613159915	9613159916	9613159917	9613159918
		1	Plug, shut-off, complete, FPM	9613159925	9613159926	9613159927	9613159928	9613159929	9613159930
23.1		1	Plug, shut-off	9613143501	9613144501	9613143401	9613143402	9613143403	9613143404
23.2	♦	1	Plug seal, EPDM (standard)						
		1	Plug seal, HNBR						
		1	Plug seal, FPM						
23.2		1	Plug seal, set (10 pcs.) EPDM	9614059401	9614059404	9614059407	9614059410	9614059413	9614059416
		1	Plug seal, set (10 pcs.) HNBR	9614059402	9614059405	9614059408	9614059411	9614059414	9614059417
		1	Plug seal, set (10 pcs.) FPM	9614059403	9614059406	9614059409	9614059412	9614059415	9614059418
29	♦	1	Diaphragm						
		1	Diaphragm, set (10 pcs.)	9614059437	9614059437	9614059438	9614059439	9614059440	9614059441
30		1	Disc for diaphragm	9613144001	9613144001	9613144101	9613144201	9613144301	9613144301
31		1	Upper spindle	9613144601	9613144601	9613143302	9613143302	9613143301	9613143301
32		1	Air fitting	9611994877	9611994877	9611994682	9611994682	9611994682	9611994682

		1"	1½"	2"	2½"	3"	4"
Actuator							
□	**Service kit**	**9611926500**	**9611926500**	**9611926500**	**9611926500**	**9611926500**	**9611926500**
Product wetted parts							
♦	**Service kit, EPDM**	**9611926543**	**9611926544**	**9611926545**	**9611926546**	**9611926547**	**9611926548**
♦	**Service kit, HNBR**	**9611926549**	**9611926550**	**9611926551**	**9611926552**	**9611926553**	**9611926554**
♦	**Service kit, FPM**	**9611926555**	**9611926556**	**9611926557**	**9611926558**	**9611926559**	**9611926560**

Parts marked with □ are included in the service kits (actuator).
Parts marked with • are included in the service kits (product wetted parts).

Recommended spare parts: Service kits.

TD 900366/6

If the actuator is marked with a danger warning do NOT attempt to cut the actuator open.



Do NOT attempt to disassemble the actuator due to spring under load danger!



Do NOT attempt to cut the actuator open, due to spring under load danger!

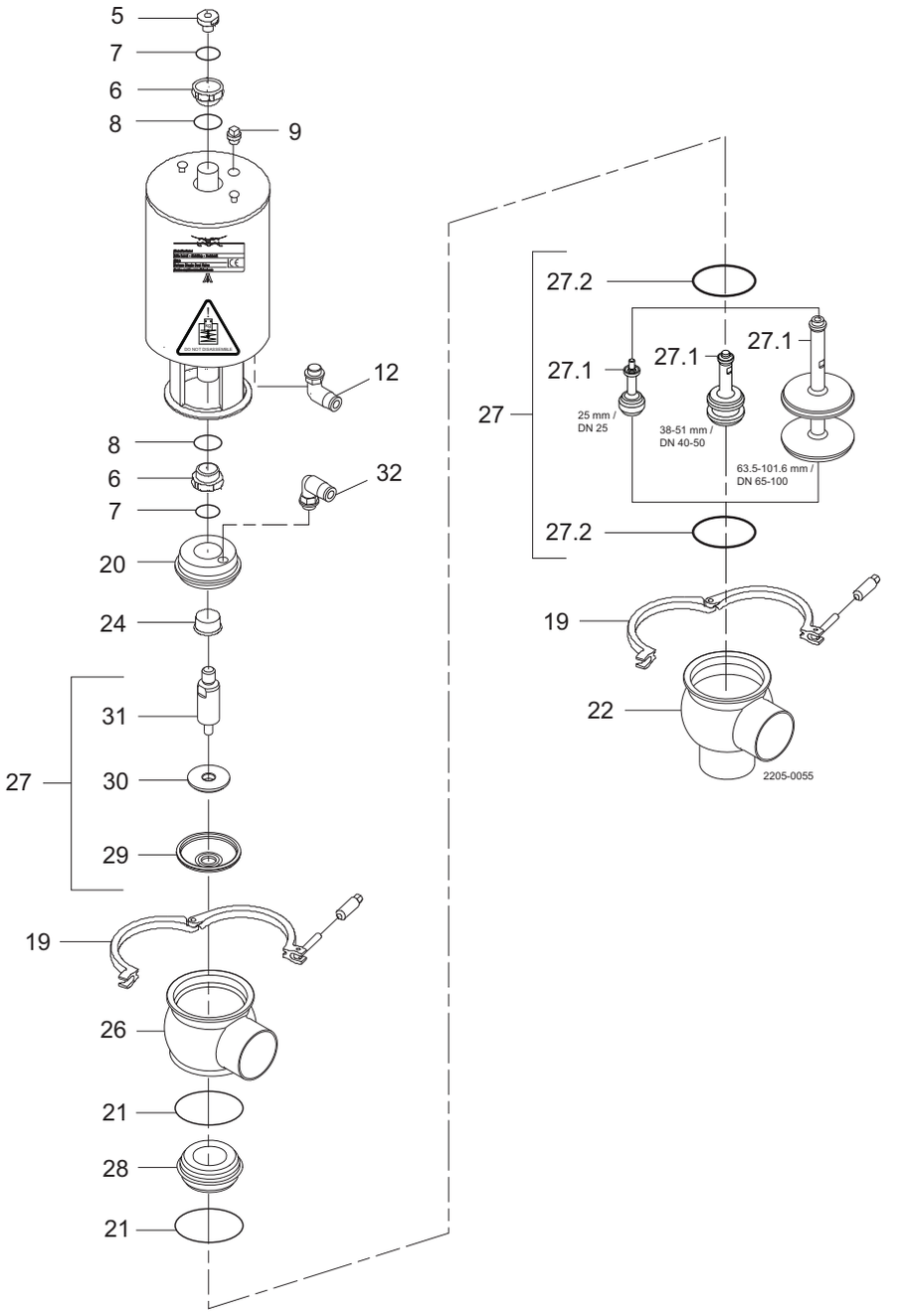

Pos		Qty	Denomination	DN 25 25 mm	DN 40 38 mm	DN 50 51 mm	DN 65 63.5 mm	DN 80 76.1 mm	DN 100 101.6 mm
Actuator									
			Actuator, complete (NO)	9613154801	9613154801	9613154802	9613154803	9613154804	9613154805
			Actuator, complete (NC)	9613154806	9613154806	9613154807	9613154808	9613154809	9613154810
			Actuator, complete (A/A)	9613154811	9613154811	9613154812	9613154813	9613154814	9613154815
5		1	Adapter, plastic (- 0115)						
		1	Adapter, steel (0115 - 0518)						
		1	Adapter, steel (0518 -)	9615344701	9615344701	9615344701	9615344701	9615344701	9615344701
6	□	2	Bushing						
7	□	2	O-ring						
8	□	2	O-ring						
9		1	Plug	9613414101	9613414101	9613414101	9613414101	9613414101	9613414101
12		1(2)	Air fitting	9611991988	9611991988	9611991988	9611991988	9611991988	9611991988
Clamp									
19		2	Clamp	9612939303	9612939303	9612939304	9612939305	9612939306	9612939307
Bonnet									
20		1	Bonnet	9613142701	9613142701	9613142801	9613142901	9613143001	9613143101
24		1	Bushing	9613125002	9613125002	9613125002	9613125002	9613125002	9613125002
Seat									
21	♦	2	O-ring, EPDM (standard)						
		2	O-ring, NBR						
		2	O-ring, FPM						
			O-ring set (10 pcs.) EPDM	9614059422	9614059422	9614059425	9614059428	9614059431	9614059434
			O-ring set (10 pcs.) HNBR	9614059423	9614059423	9614059426	9614059429	9614059432	9614059435
			O-ring set (10 pcs.) FPM	9614059424	9614059424	9614059427	9614059430	9614059433	9614059436
28		1	Seat	9613127501	9613127502	9613127503	9613127504	9613127505	9613127506
Valve Body									
26		1	Valve body, upper, 1 port ISO	9613139301	9613139303	9613139305	9613139307	9613139309	9613139311
		1	Valve body, upper, 2 ports ISO	9613139302	9613139304	9613139306	9613139308	9613139310	9613139312
		1	Valve body, upper, 1 port DIN	9613139401	9613139403	9613139405	9613139407	9613139409	9613139411
		1	Valve body, upper, 2 ports DIN	9613139402	9613139404	9613139406	9613139408	9613139410	9613139412
22		1	Valve body, lower, 2 ports ISO	9613139501	9613139503	9613139505	9613139507	9613139509	9613139511
		1	Valve body, lower, 3 ports ISO	9613139502	9613139504	9613139506	9613139508	9613139510	9613139512
		1	Valve body, lower, 2 ports DIN	9613139601	9613139603	9613139605	9613139607	9613139609	9613139611
		1	Valve body, lower, 3 ports DIN	9613139602	9613139604	9613139606	9613139608	9613139610	9613139612
Valve Plug									
27		1	Plug, change-over, ISO complete, EPDM (standard)	9613160001	9613160002	9613160003	9613160004	9613160005	9613160006
		1	Plug, change-over, ISO complete, HNBR	9613160013	9613160014	9613160015	9613160016	9613160017	9613160018
		1	Plug, change-over, ISO complete, FPM	9613160025	9613160026	9613160027	9613160028	9613160029	9613160030
		1	Plug, change-over, DIN complete, EPDM (standard)	9613160007	9613160008	9613160009	9613160010	9613160011	9613160012
		1	Plug, change-over, DIN complete, HNBR	9613160019	9613160020	9613160021	9613160022	9613160023	9613160024
		1	Plug, change-over, DIN complete, FPM	9613160031	9613160032	9613160033	9613160034	9613160035	9613160036
27.1		1	Plug, change-over, ISO	9613143601	9613143901	9613143902	9613143903	9613143904	9613143905
		1	Plug, change-over, DIN	9613143602	9613143906	9613143907	9613143908	9613143909	9613143910
27.2	♦	2	Plug seal, EPDM (standard)						
		2	Plug seal, HNBR						
		2	Plug seal, FPM						
			Plug seal set (10 pcs.) EPDM	9614059401	9614059404	9614059407	9614059410	9614059413	9614059416
			Plug seal set (10 pcs.) HNBR	9614059402	9614059405	9614059408	9614059411	9614059414	9614059417
			Plug seal set (10 pcs.) EPDM	9614059403	9614059406	9614059409	9614059412	9614059415	9614059418
29	♦	1	Diaphragm						
			Diaphragm set (10 pcs.)	9614059437	9614059437	9614059438	9614059439	9614059440	9614059441
30		1	Disc for diaphragm	9613144001	9613144001	9613144101	9613144201	9613144301	9613144301
31		1	Upper spindle	9613144601	9613144601	9613143302	9613143302	9613143301	9613143301
32		1	Air fitting	9611994877	9611994877	9611991988	9611991988	9611991988	9611991988

	DN 25 25 mm	DN 40 38 mm	DN 50 51 mm	DN 65 63.5 mm	DN 80 76.1 mm	DN 100 101.6 mm
Service kit for actuator						
□ Service kit	9611926500	9611926500	9611926500	9611926500	9611926500	9611926500
Service kit for product wetted parts, standard						
♦ Service kit, EPDM	9611926615	9611926616	9611926617	9611926618	9611926619	9611926620
♦ Service kit, HNBR	9611926621	9611926622	9611926623	9611926624	9611926625	9611926626
♦ Service kit, FPM	9611926627	9611926628	9611926629	9611926630	9611926631	9611926632

Parts marked with □♦ are included in the service kits. Recommended spare parts: Service kits. TD 900-354/5

If the actuator is marked with a danger warning do NOT attempt to cut the actuator open.



Do NOT attempt to disassemble the actuator due to spring under load danger.



Do NOT attempt to cut the actuator open, due to spring under load danger.

AND



Do NOT attempt to cut the actuator open, due to spring under load danger.

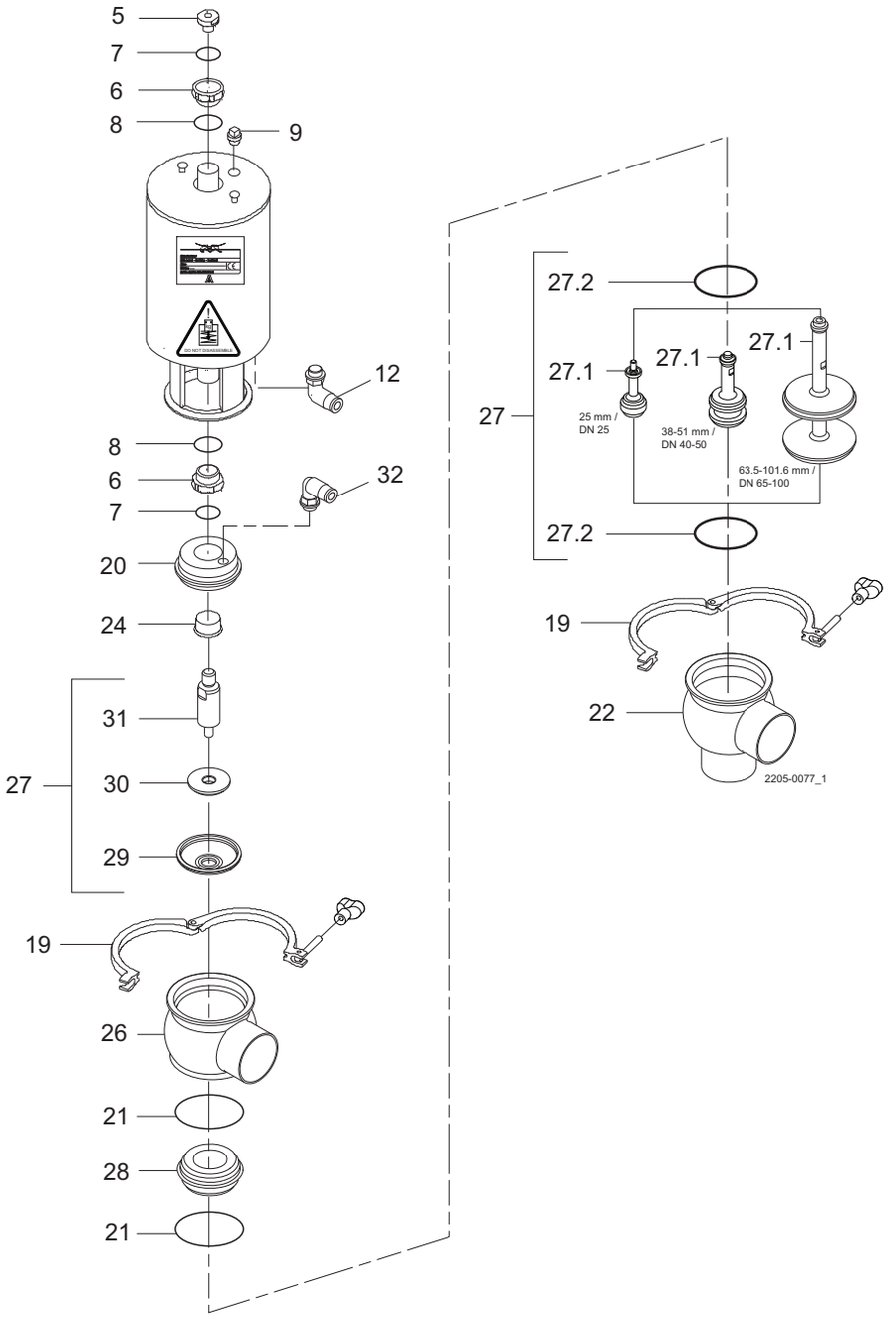

Pos		Qty	Denomination	1"	1½"	2"	2½"	3"	4"
Actuator									
			Actuator, complete (NO)	9613154831	9613154831	9613154832	9613154833	9613154834	9613154835
			Actuator, complete (NC)	9613154836	9613154836	9613163137	9613154838	9613154839	9613163140
			Actuator, complete (A/A)	9613163141	9613163141	9613163142	9613163143	9613163144	9613163145
5		1	Adapter, plastic (- 0115)						
		1	Adapter, steel (0115 - 0518)						
		1	Adapter, steel (0518 -)	9615374701	9615374701	9615374701	9615374701	9615374701	9615374701
6	□	2	Bushing						
7	□	2	O-ring						
8	□	2	O-ring						
9		1	Plug	9613414101	9613414101	9613414101	9613414101	9613414101	9613414101
12		1(2)	Air fitting	9611994682	9611994682	9611994682	9611994682	9611994682	9611994682
Clamp									
19		2	Clamp	9612939316	9612939316	9612939317	9612939318	9612939319	9612939320
Bonnet									
20		1	Bonnet	9613142701	9613142701	9613142801	9613142901	9613143001	9613143101
24		1	Bushing	9613125002	9613125002	9613125002	9613125002	9613125002	9613125002
Seat									
21	♦	2	O-ring, EPDM (standard)						
		2	O-ring, NBR						
		2	O-ring, FPM						
		1	O-ring, set (10 pcs.) EPDM	9614059422	9614059422	9614059425	9614059428	9614059431	9614059434
		1	O-ring, set (10 pcs.) HNBR	9614059423	9614059423	9614059426	9614059429	9614059432	9614059435
		1	O-ring, set (10 pcs.) FPM	9614059424	9614059424	9614059427	9614059430	9614059433	9614059436
28		1	Seat	9613127501	9613127502	9613127503	9613127504	9613127505	9613127506
Valve body									
22		1	Valve body, upper, 1 ports, clamp	9613161501	9613161503	9613161505	9613161507	9613161509	9613161511
		1	Valve body, upper, 2 ports, clamp	9613161502	9613161504	9613161506	9613161508	9613161510	9613161512
26		1	Valve body, upper, 1 ports, welding ends	9613139313	9613139315	9613139317	9613139319	9613139321	9613139323
		1	Valve body, upper, 2 ports, welding ends	9613139314	9613139316	9613139318	9613139320	9613139322	9613139324
		1	Valve body, lower, 2 ports, clamp	9613161601	9613161603	9613161605	9613161607	9613161609	9613161611
		1	Valve body, lower, 3 ports, clamp	9613161602	9613161604	9613161606	9613161608	9613161610	9613161612
		1	Valve body, lower, 2 ports, welding ends	9613139513	9613139515	9613139517	9613139519	9613139521	9613139523
		1	Valve body, lower, 3 ports, welding ends	9613139514	9613139516	9613139518	9613139520	9613139522	9613139524
Valve plug									
27		1	Plug, change-over, complete, EPDM (standard)	9613160001	9613160002	9613160003	9613160004	9613160005	9613160006
		1	Plug, change-over, complete, HNBR	9613160013	9613160014	9613160015	9613160016	9613160017	9613160018
		1	Plug, change-over, complete, FPM	9613160025	9613160026	9613160027	9613160028	9613160029	9613160030
27.1		1	Plug, change-over	9613143601	9613143901	9613143902	9613143903	9613143904	9613143905
27.2	♦	2	Plug seal, EPDM (standard)						
		2	Plug seal, HNBR						
		2	Plug seal, FPM						
		2	Plug seal, set (10 pcs.) EPDM	9614059401	9614059404	9614059407	9614059410	9614059413	9614059416
		2	Plug seal, set (10 pcs.) HNBR	9614059402	9614059405	9614059408	9614059411	9614059414	9614059417
		2	Plug seal, set (10 pcs.) FPM	9614059403	9614059406	9614059409	9614059412	9614059415	9614059418
29	♦	1	Diaphragm						
		1	Diaphragm, set (10 pcs.)	9614059437	9614059437	9614059438	9614059439	9614059440	9614059441
30		1	Disc for diaphragm	9613144001	9613144001	9613144101	9613144201	9613144301	9613144301
31		1	Upper spindle	9613144601	9613144601	9613143302	9613143302	9613143301	9613143301
32		1	Air fitting	9611994877	9611994877	9611994682	9611994682	9611994682	9611994682

		1"	1½"	2"	2½"	3"	4"
Actuator							
□	Service kit	9611926500	9611926500	9611926500	9611926500	9611926500	9611926500
Product wetted parts							
♦	Service kit, EPDM	9611926615	9611926616	9611926617	9611926618	9611926619	9611926620
♦	Service kit, HNBR	9611926621	9611926622	9611926623	9611926624	9611926625	9611926626
♦	Service kit, FPM	9611926627	9611926628	9611926629	9611926630	9611926631	9611926632

Parts marked with □ are included in the service kits (actuator).

Parts marked with • are included in the service kits (product wetted parts).

Recommended spare parts: Service kits.

TD 900366/6

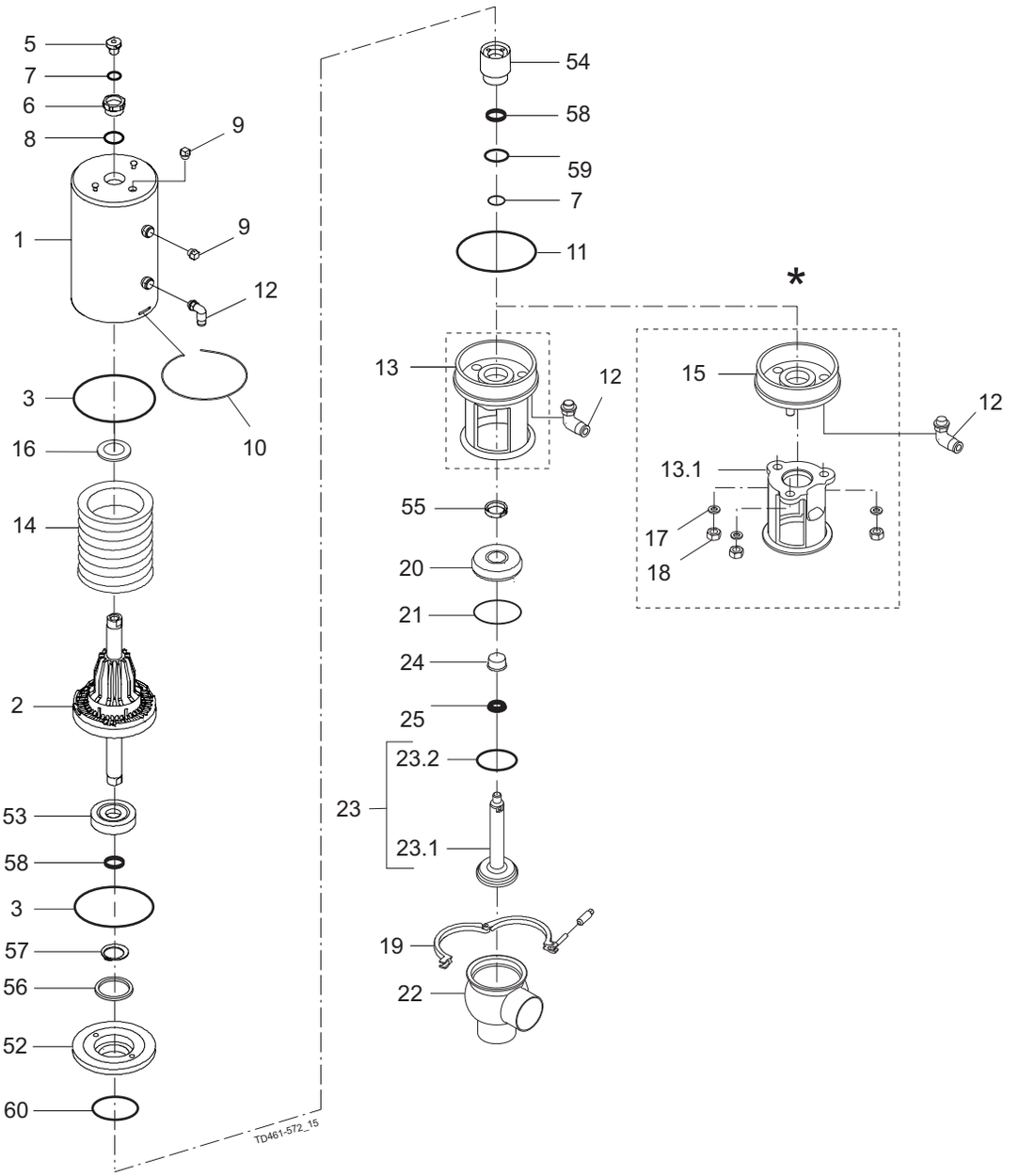

*) “Remove yoke with bolts” version, produced from 2006 to June 2016.
Replaced by “yoke without bolts” (13)

Pos		Qty	Denomination	DN 40 38 mm	DN 50 51 mm	DN 65 63.5 mm	DN 80 76 mm	DN 100 101.6 mm
			Actuator, complete (NC) shut-off valve	9613185401	9613185402	9613185403	9613185404	9613185405
			Actuator, complete (NO) change-over valve	9613185429	9613185430	9613185431	9613185432	9613185433
			Actuator, complete (NC) change-over valve	9613185419	9613185420	9613185421	9613185422	9613185423
1		1	Cylinder				9613167706	9613167706
2		1	Piston	9613132304	9613132304	9613132304	9613132405	9613132405
3	□	2	O-ring					
5		1	Adapter, plastic (- 0115)					
		1	Adapter, steel (0115 - 0518)					
		1	Adapter, steel (0518 -)	9615374701	9615374701	9615374701	9615374701	9615374701
6	□	1	Bushing					
7	□	2	O-ring					
8	□	1	O-ring					
9		2	Plug	9613414101	9613414101	9613414101	9613414101	9613414101
10		1	Lock wire	9613143202	9613143202	9613143202	9613143203	9613143203
11	□	1	O-ring					
12		2	Air fitting	9611991988	9611991988	9611991988	9611991988	9611991988
13		1	Yoke without bolts (0616 -)	9615245401	9613154402	9613154502	9613154603	9613154703
14		1	Spring assembly	9613132502	9613132502	9613132502	9613132503	9613132503
16	□	1	Support disc					
52		1	Piston	9613167801	9613167801	9613167801	9613167901	9613167901
53		1	Thrust plate	9613168201	9613168201	9613168201	9613168201	9613168201
54		1	Guide	9613168001	9613168001	9613168001	9613168101	9613168101
55		1	Nut	9613168301	9613168301	9613168301	9613168301	9613168301
56		2	Spacer, (only for shut-off valve)	9613168402				
		3	Spacer, (only for shut-off valve)		9613168402	9613168402	9613168402	9613168402
		1	Spacer, (only for shut-off valve)		9613168401	9613168401		
		2	Spacer, (only for shut-off valve)				9613168401	9613168401
57		1	Lock ring	51997509	51997509	51997509	51997509	51997509
58		2	Guide ring	9613008424	9613008424	9613008424	9613008424	9613008424
59	□	1	O-ring					
60	□	1	O-ring					
Removeable yoke with bolts - OBSOLETE use position 13								
13.1		1	Yoke (- 0616)					
15		1	Bottom (- 0616)					
17		3	Washer (- 0616)					
18		3	Nut (- 0616)					

If the actuator is marked with a danger warning do NOT attempt to cut the actuator open.



Do NOT attempt to disassemble the actuator due to spring under load danger!



Do NOT attempt to cut the actuator open, due to spring under load danger!

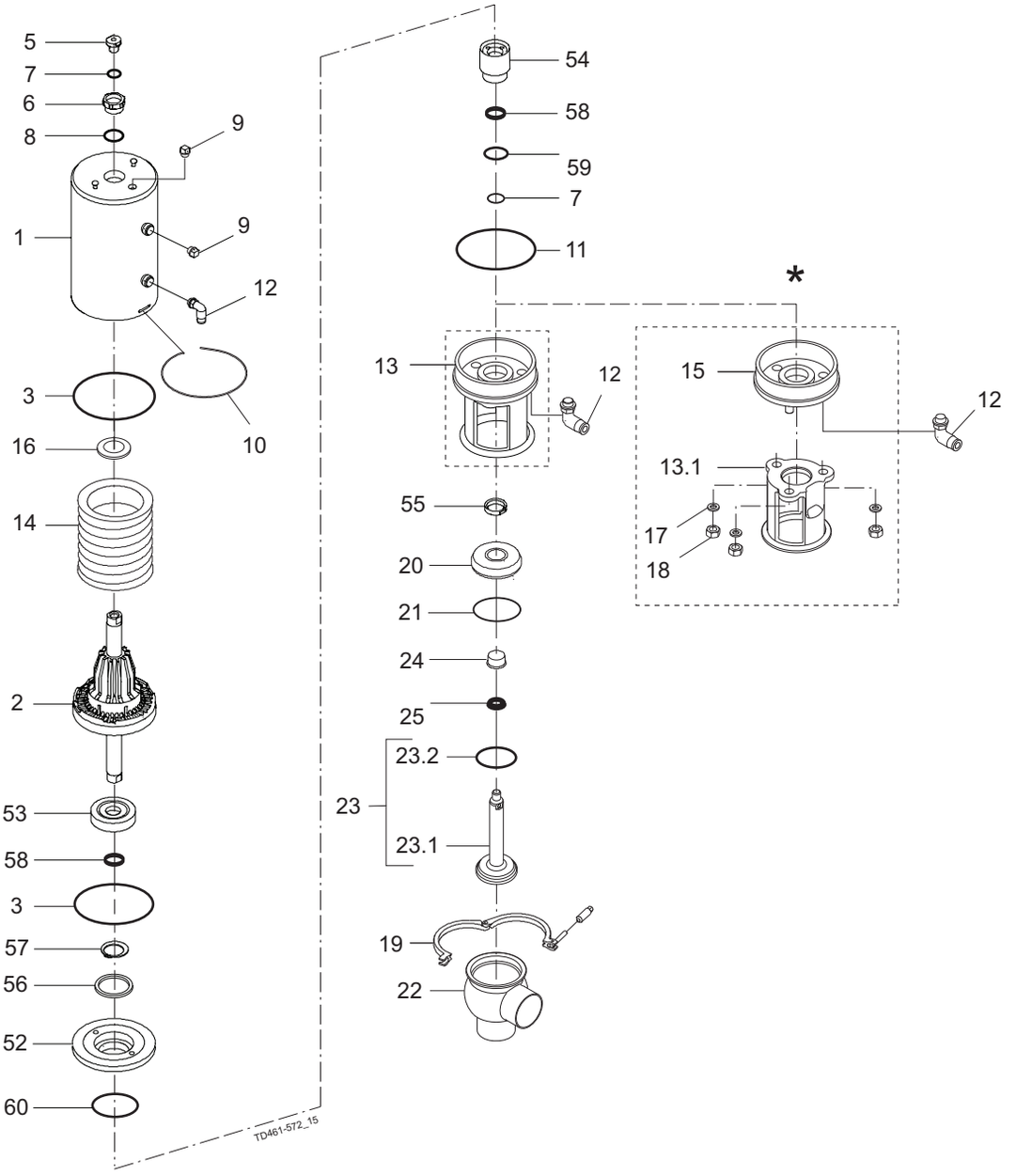

*) “Remove yoke with bolts” version, produced from 2006 to June 2016.
Replaced by “yoke without bolts” (13)

Pos	Qty	Denomination	DN 40 38 mm	DN 50 51 mm	DN 65 63.5 mm	DN 80 76 mm	DN 100 101.6 mm
Clamp							
19	1	Clamp	9612939303	9612939304	9612939305	9612939306	9612939307
Bonnet							
20	1	Bonnet	9613127102	9613127103	9613127104	9613127105	9613127106
21 ♦	1	O-ring, EPDM (standard)					
	1	O-ring, HNBR					
	1	O-ring, FPM					
	1	O-ring, set (10 pcs.) EPDM	9614059422	9614059425	9614059428	9614059431	9614059434
	1	O-ring , set (10 pcs.) HNBR	9614059423	9614059426	9614059429	9614059432	9614059435
	1	O-ring, set (10 pcs.) FPM	9614059424	9614059427	9614059430	9614059433	9614059436
24	1	Bushing	9613125002	9613125002	9613125002	9613125002	9613125002
25 ♦	1	Lip seal , EPDM (standard)					
	1	Lip seal , HNBR					
	1	Lip seal, FPM					
	1	Lip seal, set (10 pcs.) EPDM	9614059419	9614059419	9614059419	9614059419	9614059419
	1	Lip seal, set (10 pcs.) HNBR	9614059420	9614059420	9614059420	9614059420	9614059420
	1	Lip seal, set (10 pcs.) FPM	9614059421	9614059421	9614059421	9614059421	9614059421
Valve body							
22	1	Valve body, lower, 2 ports ISO	9613139503	9613139505	9613139507	9613139509	9613139511
	1	Valve body, lower, 3 ports ISO	9613139504	9613139506	9613139508	9613139510	9613139512
	1	Valve body, lower, 2 ports DIN	9613139603	9613139605	9613139607	9613139609	9613139611
	1	Valve body, lower, 3 ports DIN	9613139604	9613139606	9613139608	9613139610	9613139612
Valve plug							
23	1	Plug, shut off, ISO, complete, EPDM (standard)	9613138802	9613138803	9613138804	9613138805	9613138806
	1	Plug, shut off, ISO, complete, HNBR	9613138814	9613138815	9613138816	9613138817	9613138818
	1	Plug, shut off, ISO, complete, FPM	9613138826	9613138827	9613138828	9613138829	9613138830
	1	Plug, shut off, DIN, complete, EPDM (standard)	9613138808	9613138809	9613138810	9613138811	9613138812
	1	Plug, shut off, DIN, complete, HNBR	9613138820	9613138821	9613138822	9613138823	9613138824
	1	Plug, shut off, DIN, complete, FPM	9613138832	9613138833	9613138834	9613138835	9613138836
23.1	1	Plug, shut off, ISO	9613139802	9613139803	9613139804	9613139805	9613139806
	1	Plug, shut off , DIN	9613139808	9613139809	9613139810	9613139811	9613139812
23.2♦	1	Plug seal, EPDM (standard)					
	1	Plug seal , HNBR					
	1	Plug seal , FPM					
	1	Plug seal, set (10 pcs.) EPDM	9614059404	9614059407	9614059410	9614059413	9614059416
	1	Plug seal, set (10 pcs.) HNBR	9614059405	9614059408	9614059411	9614059414	9614059417
	1	Plug seal , set (10 pcs.) FPM	9614059406	9614059409	9614059412	9614059415	9614059418

	DN 40 38 mm	DN 50 51 mm	DN 65 63.5 mm	DN 80 76 mm	DN 100 101.6 mm
Service kits for actuator					
□ Service kit, actuator	9611926738	9611926738	9611926738	9611926739	9611926739
Service kit for product wetted parts					
Service kit, EPDM	9611926502	9611926503	9611926504	9611926505	9611926506
Service kit, HNBR	9611926508	9611926509	9611926510	9611926511	9611926512
Service kit, FPM	9611926514	9611926515	9611926516	9611926517	9611926518

Parts marked with □ are included in the service kits (actuator)

Parts marked with ♦ are included in the service kits (product wetted parts)

Tool for bushing (pos. 24) 9613160901

TD900-467/5

If the actuator is marked with a danger warning do NOT attempt to cut the actuator open.



Do NOT attempt to disassemble the actuator due to spring under load danger.



Do NOT attempt to cut the actuator open, due to spring under load danger.

AND



Do NOT attempt to cut the actuator open, due to spring under load danger.

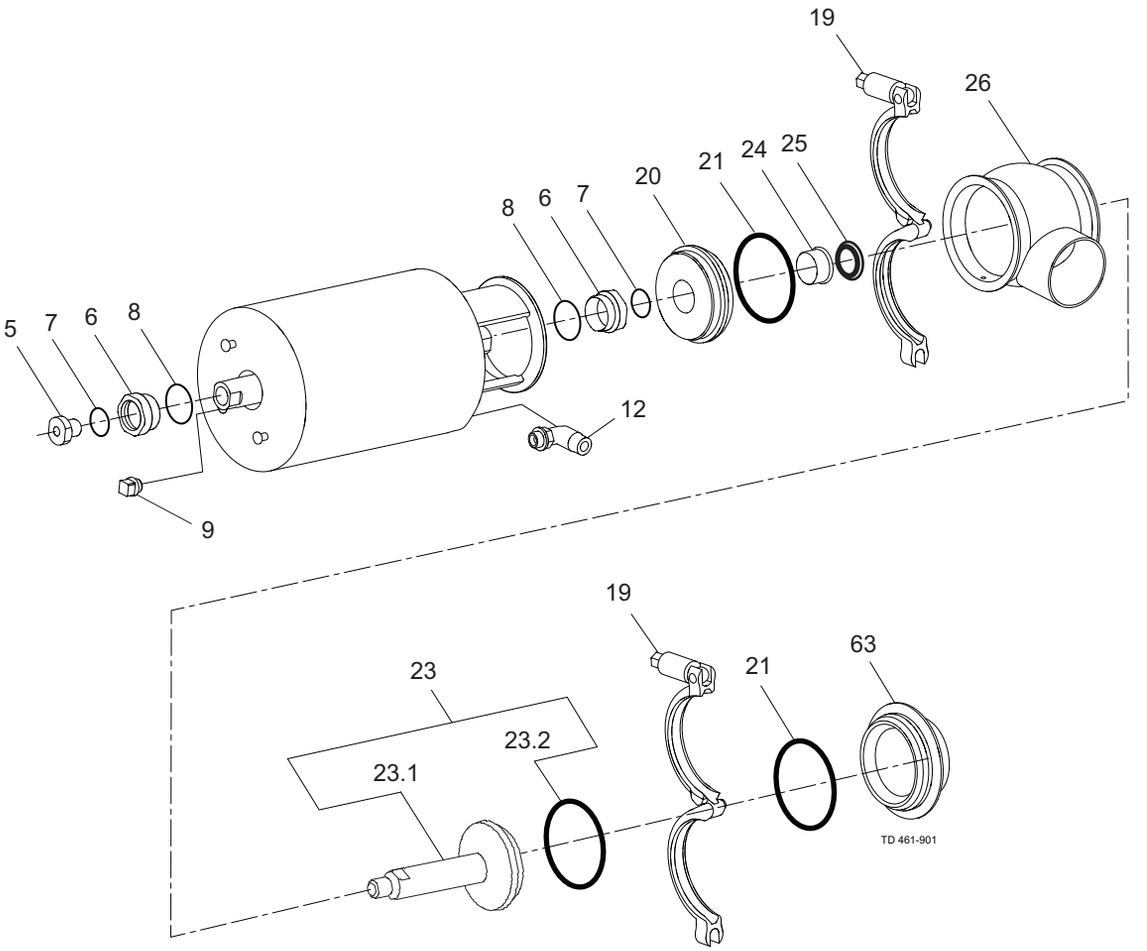

Pos	Qty	Denomination	2”	2½”	3”	4”
		Actuator, complete (NO)	9613154832	9613154833	9613154834	9613154835
		Actuator, complete (NC)	9613163137	9613154838	9613154839	9613163140
		Actuator, complete (A/A)	9613163142	9613163143	9613163144	9613163145
5	1	Adapter, plastic (- 0115)				
	1	Adapter, steel (0115 - 0518)				
	1	Adapter, steel (0518 -)	9615374701	9615374701	9615374701	9615374701
6 □	2	Bushing				
7 □	2	O-ring				
8 □	2	O-ring				
9	1	Plug	9613414101	9613414101	9613414101	9613414101
12	1(2)	Air fitting	9611994682	9611994682	9611994682	9611994682
Clamp						
19	2	Clamp	9612939323	9612939324	9612939325	9612939326
Bonnet						
20	1	Bonnet	9613127103	9613127104	9613127105	9613127106
21 ♦	2	O-ring, EPDM (standard)				
	2	O-ring, HNBR				
	2	O-ring, FPM				
		O-ring, set (10 pcs.) EPDM	9614059425	9614059428	9614059431	9614059434
		O-ring, set (10 pcs.) HNBR	9614059426	9614059429	9614059432	9614059435
		O-ring, set (10 pcs.) FPM	9614059427	9614059430	9614059433	9614059436
24	1	Bushing	9613125002	9613125002	9613125002	9613125002
25 ♦	1	Lip seal, EPDM (standard)				
	1	Lip seal, HNBR				
	1	Lip seal, FPM				
		Lip seal, set (10 pcs.) EPDM	9614059419	9614059419	9614059419	9614059419
		Lip seal, set (10 pcs.) HNBR	9614059420	9614059420	9614059420	9614059420
		Lip seal, set (10 pcs.) FPM	9614059421	9614059421	9614059421	9614059421
Valve Body						
26	1	Valve body, 1 port, clamp	9613169002	9613169004	9613169006	9613169008
	1	Valve body, 2 ports, clamp	9613169018	9613169020	9613169022	9613169024
	1	Valve body, 1 port, welding ends	9613444809	9613444811	9613444813	9613444815
	1	Valve body, 2 ports, welding ends	9613444810	9613444812	9613444814	9613444816
63	1	Port seal element, clamp	9634070601	9634070701	9634070801	9634070901
	1	Port seal element, welding ends	9634071101	9634071201	9634071301	9634071401
Valve Plug						
23	1	Plug, shut off, complete, EPDM (standard)	9613138803	9613138804	9613138805	9613138806
	1	Plug, shut off, complete, HNBR	9613138815	9613138816	9613138817	9613138818
	1	Plug, shut off, complete, FPM	9613138827	9613138828	9613138829	9613138830
23.1	1	Plug, shut off	9613139803	9613139804	9613139805	9613139806
23.2♦	1	Plug seal, EPDM (standard)				
	1	Plug seal, HNBR				
	1	Plug seal, FPM				
		Plug seal, set (10 pcs.) EPDM	9614059407	9614059410	9614059413	9614059416
		Plug seal, set (10 pcs.) HNBR	9614059408	9614059411	9614059414	9614059417
		Plug seal, set (10 pcs.) FPM	9614059409	9614059412	9614059415	9614059418

	2”	2½”	3”	4”
Actuator				
Service kit	**9611926500**	**9611926500**	**9611926500**	**9611926500**
Product wetted parts				
Service kit, EPDM	**9611926743**	**9611926744**	**9611926745**	**9611926746**
Service kit, HNBR	**9611926747**	**9611926748**	**9611926749**	**9611926750**
Service kit, FPM	**9611926751**	**9611926752**	**9611926753**	**9611926754**

Recommended spare parts: Service kits

Parts marked with □ are included in the service kits (actuator).
Parts marked with • are included in the service kits (product wetted parts).

TD 900489/1

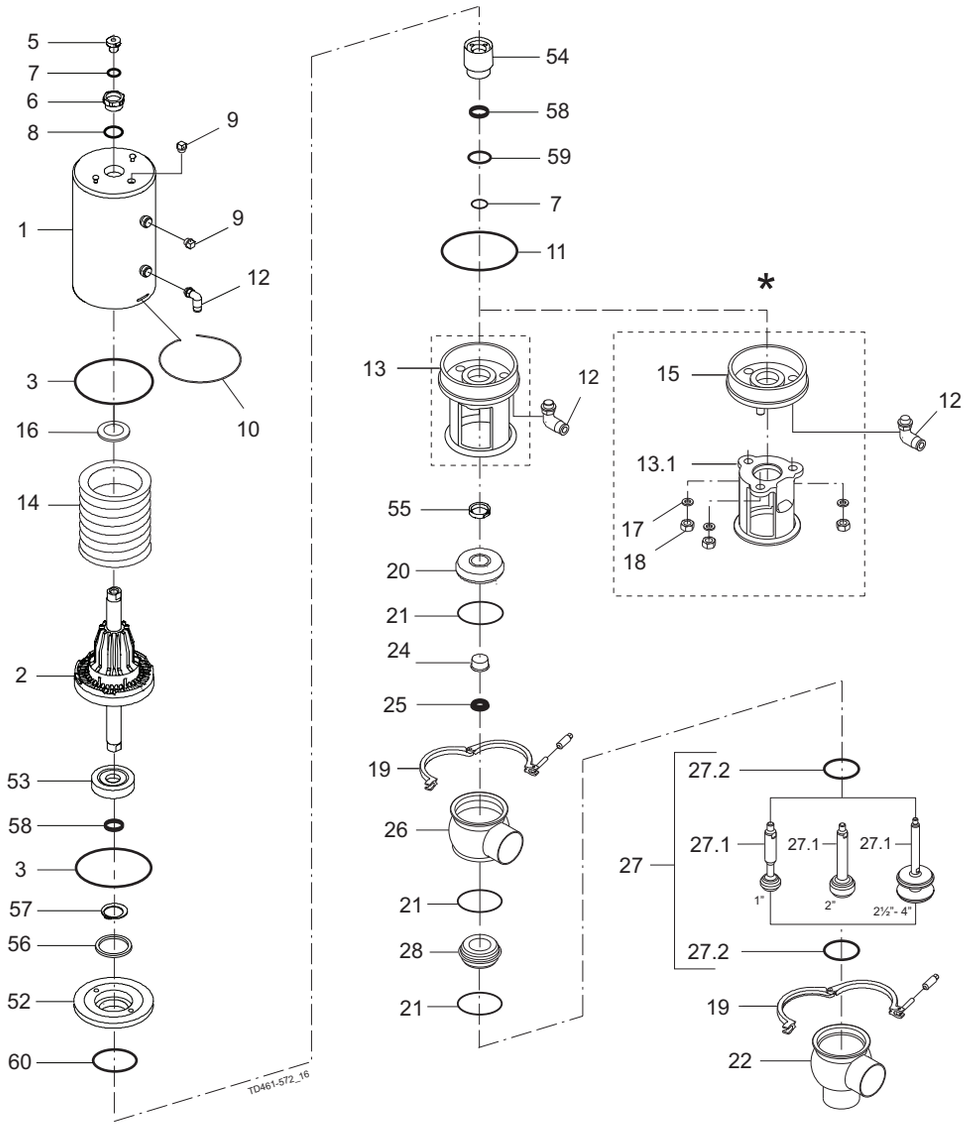

*) "Remove yoke with bolts" version, produced from 2006 to June 2016.
Replaced by "yoke without bolts" (13)

Pos		Qty	Denomination	DN 40 38 mm	DN 50 51 mm	DN 65 63.5 mm	DN 80 76 mm	DN 100 101.6 mm
1			Actuator , - complete (NC) shut-off valve	9613185401	9613185402	9613185403	9613185404	9613185405
			Actuator , - complete (NO) change-over valve	9613185429	9613185430	9613185431	9613185432	9613185433
			Actuator , - complete (NC) change-over valve	9613185419	9613185420	9613185421	9613185422	9613185423
		1	Cylinder	9613167705	9613167705	9613167705	9613167706	9613167706
2		1	Piston	9613132304	9613132304	9613132304	9613132405	9613132405
3	□	2	O-ring					
5		1	Adapter, plastic (- 0115)					
		1	Adapter, steel (0115 - 0518)					
		1	Adapter, steel (0518 -)	9615374701	9615374701	9615374701	9615374701	9615374701
6	□	1	Bushing					
7	□	2	O-ring					
8	□	1	O-ring					
9		2	Plug	9613414101	9613414101	9613414101	9613414101	9613414101
10		1	Lock wire	9613143202	9613143202	9613143202	9613143203	9613143203
11	□	1	O-ring					
12		2	Air fitting	9611991988	9611991988	9611991988	9611991988	9611991988
13		1	Yoke without bolts , (0616 -)	9615245401	9613154402	9613154502	9613154603	9613154703
14		1	Spring assembly	9613132502	9613132502	9613132502	9613132503	9613132503
16	□	1	Support disc					
52		1	Piston	9613167801	9613167801	9613167801	9613167901	9613167901
53		1	Thrust plate	9613168201	9613168201	9613168201	9613168201	9613168201
54		1	Guide	9613168001	9613168001	9613168001	9613168101	9613168101
55		1	Nut	9613168301	9613168301	9613168301	9613168301	9613168301
56		2	Spacer (only for shut-off valve)	9613168402				
57		1	Lock ring	51997509	51997509	51997509	51997509	51997509
58		2	Guide ring	9613008424	9613008424	9613008424	9613008424	9613008424
59	□	1	O-ring					
60	□	1	O-ring					
Removeable yoke with bolts - OBSOLETE								
use position 13								
13.1		1	Yoke , (- 0616)					
15		1	Bottom , (- 0616)					
17		3	Washer , (- 0616)					
18		3	Nut , (- 0616)					

If the actuator is marked with a danger warning do NOT attempt to cut the actuator open.



Do NOT attempt to disassemble the actuator due to spring under load danger!



Do NOT attempt to cut the actuator open, due to spring under load danger!

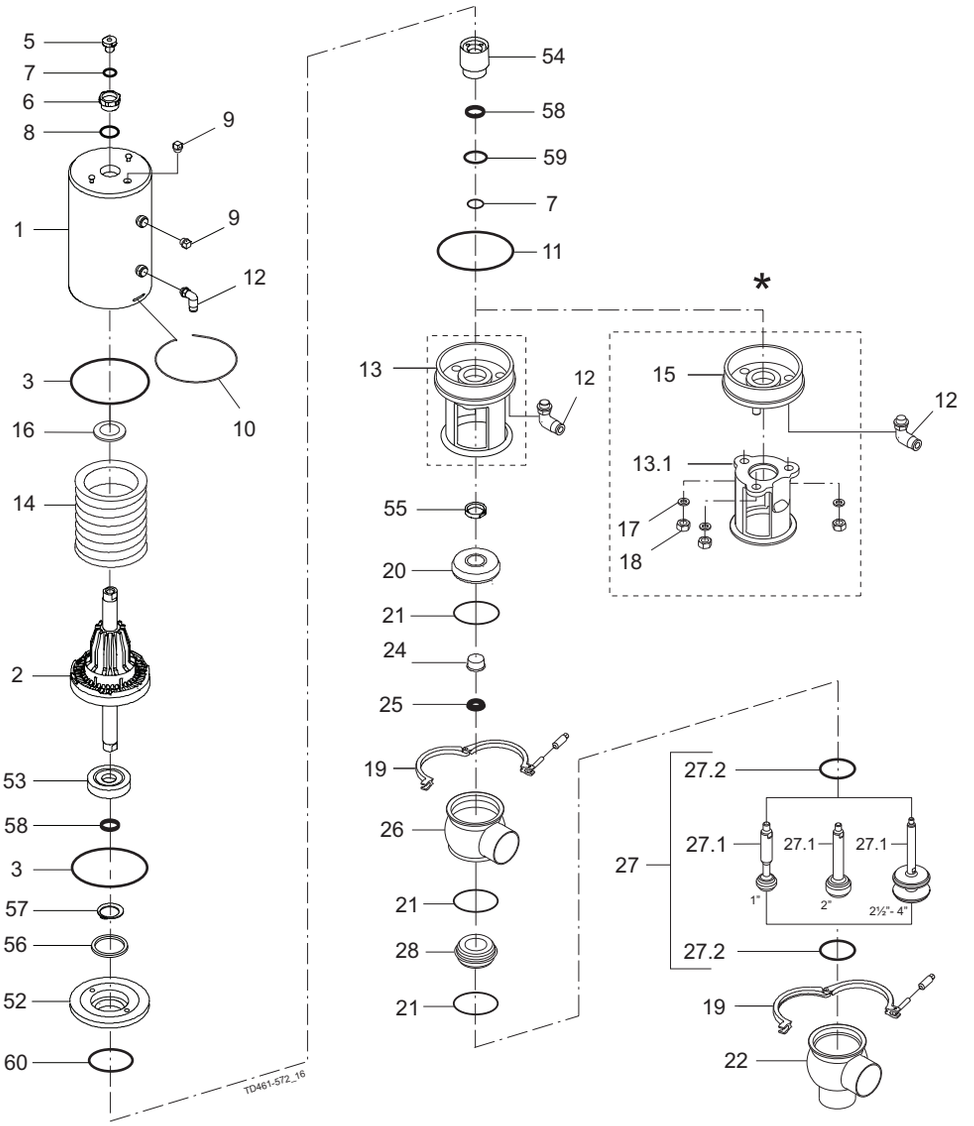

*) “Remove yoke with bolts” version, produced from 2006 to June 2016.
Replaced by “yoke without bolts” (13)

Pos	Qty	Denomination	DN 40 38 mm	DN 50 51 mm	DN 65 63.5 mm	DN 80 76 mm	DN 100 101.6 mm
Clamp							
19	2	Clamp	9612939303	9612939304	9612939305	9612939306	9612939307
Bonnet							
20	1	Bonnet	9613127102	9613127103	9613127104	9613127105	9613127106
21 ♦	3	O-ring, EPDM (standard)					
	3	O-ring, HNBR					
	3	O-ring, FPM					
	3	O-ring, set (10 pcs.) , EPDM	9614059422	9614059425	9614059428	9614059431	9614059434
	3	O-ring, set (10 pcs.) , HNBR	9614059423	9614059426	9614059429	9614059432	9614059435
	3	O-ring, set (10 pcs.) , FPM	9614059424	9614059427	9614059430	9614059433	9614059436
24	1	Bushing	9613125002	9613125002	9613125002	9613125002	9613125002
25 ♦	1	Lip seal, EPDM (standard)	9613120501	9613120501	9613120501	9613120501	9613120501
	1	Lip seal, HNBR	9613120502	9613120502	9613120502	9613120502	9613120502
	1	Lip seal, FPM	9613120503	9613120503	9613120503	9613120503	9613120503
	1	Lip seal, set (10 pcs.) , EPDM	9614059419	9614059419	9614059419	9614059419	9614059419
	1	Lip seal, set (10 pcs.) , HNBR	9614059420	9614059420	9614059420	9614059420	9614059420
	1	Lip seal, set (10 pcs.) , FPM	9614059421	9614059421	9614059421	9614059421	9614059421
Valve body							
26	1	Valve body, upper, 1 port ISO	9613139303	9613139305	9613139307	9613139309	9613139311
	1	Valve body, upper, 2 ports ISO	9613139304	9613139306	9613139308	9613139310	9613139312
	1	Valve body, upper, 1 port DIN	9613139403	9613139405	9613139407	9613139409	9613139411
	1	Valve body, upper, 2 ports DIN	9613139404	9613139406	9613139408	9613139410	9613139412
22	1	Valve body, lower, 2 ports ISO	9613139503	9613139505	9613139507	9613139509	9613139511
	1	Valve body, lower, 3 ports ISO	9613139504	9613139506	9613139508	9613139510	9613139512
	1	Valve body, lower, 2 ports DIN	9613139603	9613139605	9613139607	9613139609	9613139611
	1	Valve body, lower, 3 ports DIN	9613139604	9613139606	9613139608	9613139610	9613139612
Valve plug							
27	1	Plug, change over, ISO complete, EPDM (standard)	9613127702	9613127703	9613127704	9613127705	9613127706
	1	Plug, change over, ISO complete, HNBR	9613127714	9613127715	9613127716	9613127717	9613127718
	1	Plug, change over, ISO complete, FPM	9613127726	9613127727	9613127728	9613127729	9613127730
	1	Plug, change over, DIN complete, EPDM (standard)	9613127708	9613127709	9613127710	9613127711	9613127712
	1	Plug, change over, DIN complete, HNBR	9613127720	9613127721	9613127722	9613127723	9613127724
	1	Plug, change over, DIN complete, FPM	9613127732	9613127733	9613127734	9613127735	9613127736
27.1	1	Plug, change over, ISO	9613140002	9613140003	9613140004	9613140005	9613140006
	1	Plug, change over, DIN	9613140008	9613140009	9613140010	9613140011	9613140012
27.2♦	2	Plug seal, EPDM (standard)					
	2	Plug seal, HNBR					
	2	Plug seal, FPM					
	2	Plug seal, set (10 pcs.) , EPDM	9614059404	9614059407	9614059410	9614059413	9614059416
	2	Plug seal, set (10 pcs.) , HNBR	9614059405	9614059408	9614059411	9614059414	9614059417
	2	Plug seal, set (10 pcs.) , FPM	9614059406	9614059409	9614059412	9614059415	9614059418

	DN 40 38 mm	DN 50 51 mm	DN 65 63.5 mm	DN 80 76 mm	DN 100 101.6 mm
Recommended spare parts: Service kits.					
□ **Service kit, actuator**	**9611926738**	**9611926738**	**9611926738**	**9611926739**	**9611926739**
Service kit for product wetted parts					
Service kit, EPDM	**9611926580**	**9611926581**	**9611926582**	**9611926583**	**9611926584**
Service kit, HNBR	**9611926586**	**9611926587**	**9611926588**	**9611926589**	**9611926590**
Service kit, FPM	**9611926592**	**9611926593**	**9611926594**	**9611926595**	**9611926596**

Parts marked with □ are included in the service kits (actuator)

Parts marked with ♦ are included in the service kits (product wetted parts)

Tool for bushing (pos. 24) 9613160901

TD900-467/5

If the actuator is marked with a danger warning do NOT attempt to cut the actuator open.



Do NOT attempt to disassemble the actuator due to spring under load danger!



Do NOT attempt to cut the actuator open, due to spring under load danger!

AND



Do NOT attempt to cut the actuator open, due to spring under load danger.

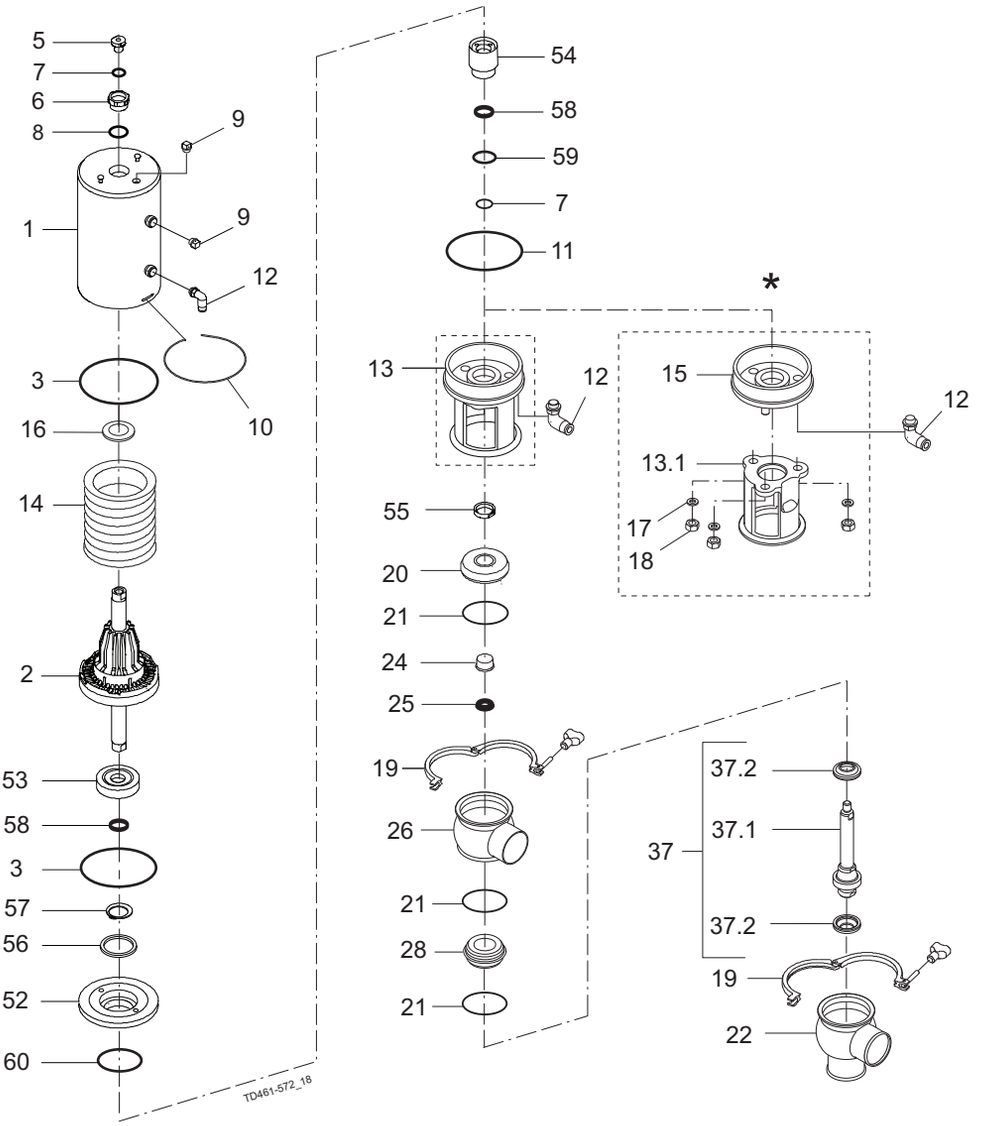

*) “Remove yoke with bolts” version, produced from 2006 to June 2016.
Replaced by “yoke without bolts” (13)

Pos		Qty	Denomination	1½”	2”	2½”	3”	4”
			Actuator , - complete blasted (NO) Change Over	9613185934	9613185935	9613185936	9613185937	9613185938
			Actuator , - complete blasted (NC) Change Over	9613185924	9613185925	9613185926	9613185927	9613185928
			Actuator , - complete polished (NO) Change Over	9613185934	9613185930	9613185931	9613185937	9613185933
			Actuator , - complete polished (NC) Change Over	9613185919	9613185920	9613185921	9613185922	9613185923
1		1	Cylinder , (blasted)	9613167709	9613167709	9613167709	9613167710	9613167711
		1	Cylinder , (polished)	9613167711	9613167711	9613167711	9613167712	9613167712
2		1	Piston	9613132304	9613132304	9613132304	9613132405	9613132405
3	■	2	O-ring	9611990033	9611990033	9611990033	9611994283	9611994283
5		1	Adapter, plastic (- 0115)					
		1	Adapter, steel (0115 - 0518)					
		1	Adapter, steel (0518 -)	9615374701	9615374701	9615374701	9615374701	9615374701
6	■	1	Bushing	9613132801	9613132801	9613132801	9613132801	9613132801
7	■	2	O-ring	9611994300	9611994300	9611994300	9611994300	9611994300
8	■	1	O-ring	9611994680	9611994680	9611994680	9611994680	9611994680
9		2	Plug	9613414101	9613414101	9613414101	9613414101	9613414101
10		1	Lock wire	9613143202	9613143202	9613143202	9613143203	9613143203
11	■	1	O-ring	22340622	22340622	22340622	9611992579	9611992579
12		2	Air fitting	9611994682	9611994682	9611994482	9611994682	9611994682
13		1	Yoke	9615245401	9613154402	9613154502	9613154603	9613154703
14		1	Spring assembly	9613132502	9613132502	9613132502	9613132503	9613132503
16	■	1	Support disc	9613142601	9613142601	9613142601	9613142601	9613142601
52		1	Piston	9613167801	9613167801	9613167801	9613167901	9613167901
53		1	Thrust plate	9613168201	9613168201	9613168201	9613168201	9613168201
54		1	Guide	9613168001	9613168001	9613168001	9613168101	9613168101
55		1	Nut	9613168301	9613168301	9613168301	9613168301	9613168301
56		2	Spacer , (only for shut-off valve)	9613168402				
		3	Spacer , (only for shut-off valve)		9613168402	9613168402	9613168402	9613168402
		1	Spacer , (only for shut-off valve)		9613168401	9613168401		
		2	Spacer , (only for shut-off valve)				9613168401	9613168401
		1	Spacer, (only for NO change-over valve)				9613168401	9613168401
57		1	Lock ring	51997509	51997509	51997509	51997509	51997509
58		2	Guide ring	9613008424	9613008424	9613008424	9613008424	9613008424
59	■	1	O-ring					
60	■	1	O-ring					

Removeable yoke with bolts - OBSOLETE

use position 13

13.1		1	Yoke (- 0616)					
15		1	Bottom , (- 0616)					
17		3	Washer , (- 0616)					
18		3	Nut , (- 0616)					

If the actuator is marked with a danger warning do NOT attempt to cut the actuator open.



Do NOT attempt to disassemble the actuator due to spring under load danger!



Do NOT attempt to cut the actuator open, due to spring under load danger!

AND



Do NOT attempt to cut the actuator open, due to spring under load danger.

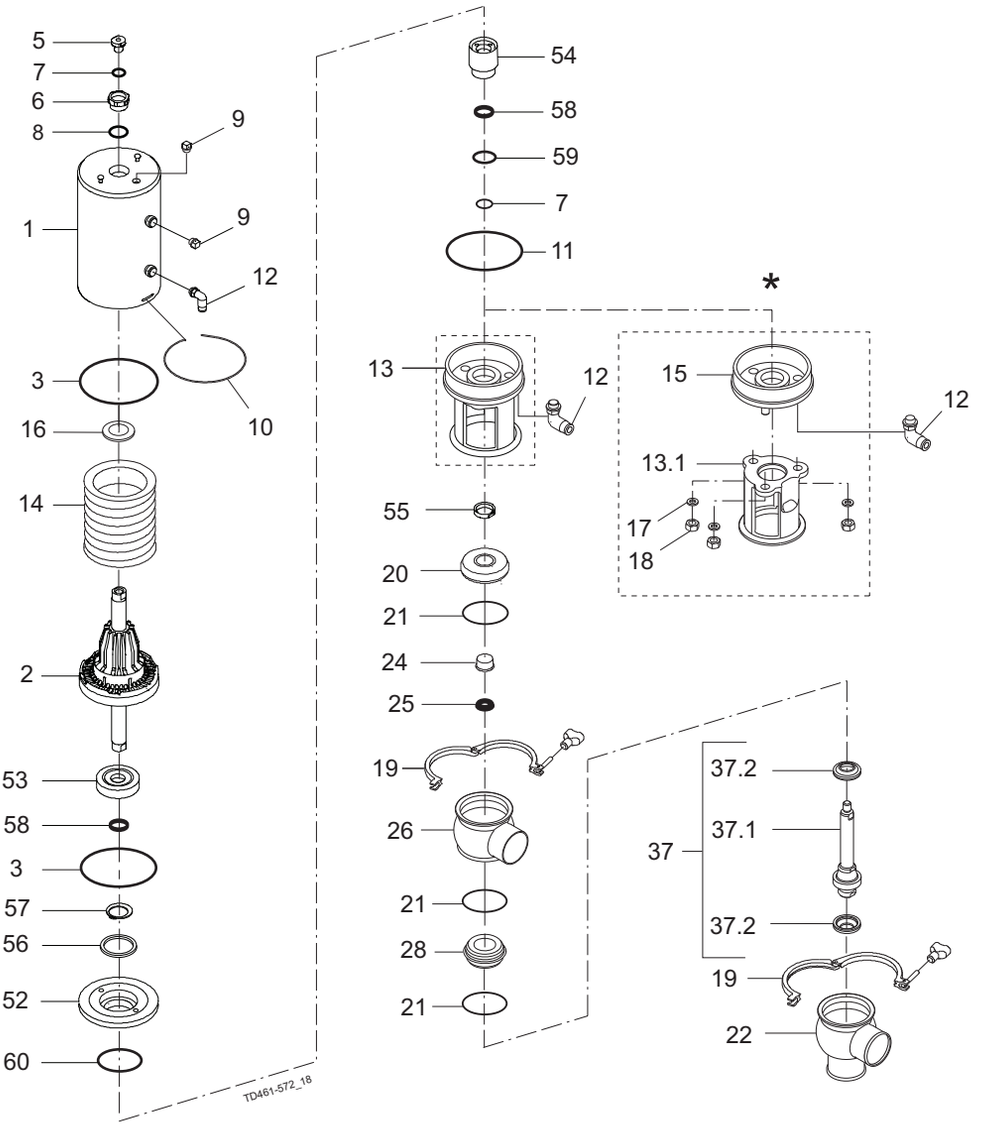

*) “Remove yoke with bolts” version, produced from 2006 to June 2016.
Replaced by “yoke without bolts” (13)

Pos	Qty	Denomination	1½"	2"	2½"	3"	4"
Clamp							
19	2	Clamp	9612939316	9612939317	9612939318	9612939319	9612939320
Bonnet							
20	1	Bonnet	9613127102	9613127103	9613127104	9613127105	9613127106
21 ♦	3	O-ring, EPDM (standard)					
	3	O-ring, , HNBR					
	3	O-ring, , FPM					
		O-ring, , set (10 pcs.) EPDM	9614059422	9614059425	9614059428	9614059431	9614059434
		O-ring, , set (10 pcs.) HNBR	9614059423	9614059426	9614059429	9614059432	9614059435
		O-ring, , set (10 pcs.) FPM	9614059424	9614059427	9614059430	9614059433	9614059436
24	1	Bushing	9613125002	9613125002	9613125002	9613125002	9613125002
25 ♦	1	Lip seal, , EPDM (standard)					
	1	Lip seal, , HNBR					
	1	Lip seal, , FPM					
		Lip seal, , set (10 pcs.) EPDM	9614059419	9614059419	9614059419	9614059419	9614059419
		Lip seal, , set (10 pcs.) HNBR	9614059420	9614059420	9614059420	9614059420	9614059420
		Lip seal, , set (10 pcs.) FPM	9614059421	9614059421	9614059421	9614059421	9614059421
Seat							
28	1	Seat	9613127502	9613127503	9613127504	9613127505	9613127506
Valve Body							
26	1	Valve body, , upper, 1 ports, clamp	9613161503	9613161505	9613161507	9613161509	9613161511
	1	Valve body, , upper, 2 ports, clamp	9613161504	9613161506	9613161508	9613161510	9613161512
	1	Valve body, , upper, 1 ports, welding ends	9613139315	9613139317	9613139319	9613139321	9613139323
	1	Valve body, , upper, 2 ports, welding ends	9613139316	9613139318	9613139320	9613139322	9613139324
22	1	Valve body, , lower, 2 ports, clamp	9613161603	9613161605	9613161607	9613161609	9613161611
	1	Valve body, , lower, 3 ports, clamp	9613161604	9613161606	9613161608	9613161610	9613161612
	1	Valve body, , lower, 2 ports, welding ends	9613139515	9613139517	9613139519	9613139521	9613139523
	1	Valve body, , lower, 3 ports, welding ends	9613139516	9613139518	9613139520	9613139522	9613139524
Valve Plug							
37	1	Plug, change over, complete	9613155502	9613155503	9613155503	9613155505	9613155506
37.1	1	Plug, change over	9613155401	9613155402	9613155403	9613155404	9613155405
37.2♦	2	Plug seal, PTFE					
		Plug, seal, set (10 pcs.) PTFE	9614059449	9614059450	9614059451	9614059452	9614059453
			1½"	2"	2½"	3"	4"

Recommended spare parts: Service kits.

■	**Servicekits, Actuator**	**9611926738**	**9611926738**	**9611926738**	**9611926739**	**9611926739**
♦	**Servicekits, EPDM**	**9611926633**	**9611926634**	**9611926635**	**9611926636**	**9611926637**
♦	**Servicekits, HNBR**	**9611926638**	**9611926639**	**9611926640**	**9611926641**	**9611926642**
♦	**Servicekits, FPM**	**9611926643**	**9611926644**	**9611926645**	**9611926646**	**9611926647**

Parts marked with ♦■ are included in the service kits (actuator)
Recommended spare parts: Service kits

TD900468/3

If the actuator is marked with a danger warning do NOT attempt to cut the actuator open.



Do NOT attempt to disassemble the actuator due to spring under load danger!



Do NOT attempt to cut the actuator open, due to spring under load danger!

AND



Do NOT attempt to cut the actuator open due to spring under load danger.

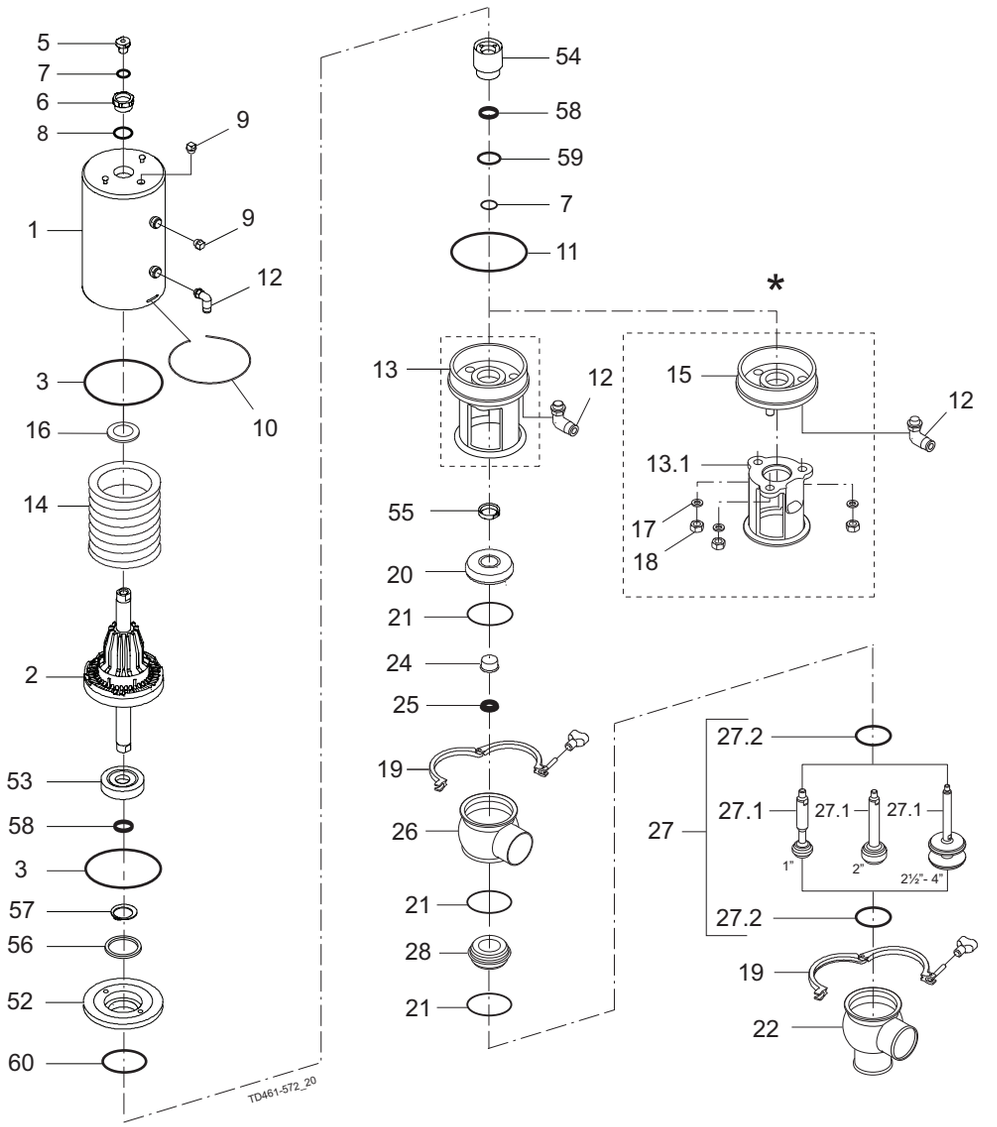

*) "Remove yoke with bolts" version, produced from 2006 to June 2016.
Replaced by "yoke without bolts" (13)

Pos		Qty	Denomination	1½”	2”	2½”	3”	4”
			Actuator, - complete blasted (NO) Change Over	9613185934	9613185935	9613185936	9613185937	9613185938
			Actuator, - complete blasted (NC) Change Over	9613185924	9613185925	9613185926	9613185927	9613185928
			Actuator , - complete polished (NO) Change Over	9613185934	9613185930	9613185931	9613185937	9613185933
			Actuator , - complete polished (NC) Change Over	9613185919	9613185920	9613185921	9613185922	9613185923
1		1	Cylinder , (blasted)	9613167709	9613167709	9613167709	9613167710	9613167711
		1	Cylinder , (polished)	9613167711	9613167711	9613167711	9613167712	9613167712
2		1	Piston	9613132304	9613132304	9613132304	9613132405	9613132405
3	■	2	O-ring					
5		1	Adapter, plastic (- 0115)					
		1	Adapter, steel (0115 - 0518)					
		1	Adapter, steel (0518 -)	9615374701	9615374701	9615374701	9615374701	9615374701
6	■	1	Bushing					
7	■	2	O-ring					
8	■	1	O-ring					
9		2	Plug	9613414101	9613414101	9613414101	9613414101	9613414101
10		1	Lock wire	9613143202	9613143202	9613143202	9613143203	9613143203
11	■	1	O-ring					
12		2	Air fitting	9611994682	9611994682	9611994482	9611994682	9611994682
13		1	Yoke	9615245401	9613154402	9613154502	9613154603	9613154703
14		1	Spring assembly	9613132502	9613132502	9613132502	9613132503	9613132503
16	■	1	Support disc					
52		1	Piston	9613167801	9613167801	9613167801	9613167901	9613167901
53		1	Thrust plate	9613168201	9613168201	9613168201	9613168201	9613168201
54		1	Guide	9613168001	9613168001	9613168001	9613168101	9613168101
55		1	Nut	9613168301	9613168301	9613168301	9613168301	9613168301
56		2	Spacer , (only for shut-off valve)	9613168402				
57		1	Lock ring	51997509	51997509	51997509	51997509	51997509
58		2	Guide ring	9613008424	9613008424	9613008424	9613008424	9613008424
59	■	1	O-ring					
60	■	1	O-ring					

Removeable yoke with bolts - OBSOLETE

use position 13

13.1	1	Yoke , (- 0616)	
15	1	Bottom , (- 0616)	
17	3	Washer , (- 0616)	
18	3	Nut , (- 0616)	

If the actuator is marked with a danger warning do NOT attempt to cut the actuator open.



Do NOT attempt to disassemble the actuator due to spring under load danger!



Do NOT attempt to cut the actuator open, due to spring under load danger!

AND



Do NOT attempt to cut the actuator open due to spring under load danger.

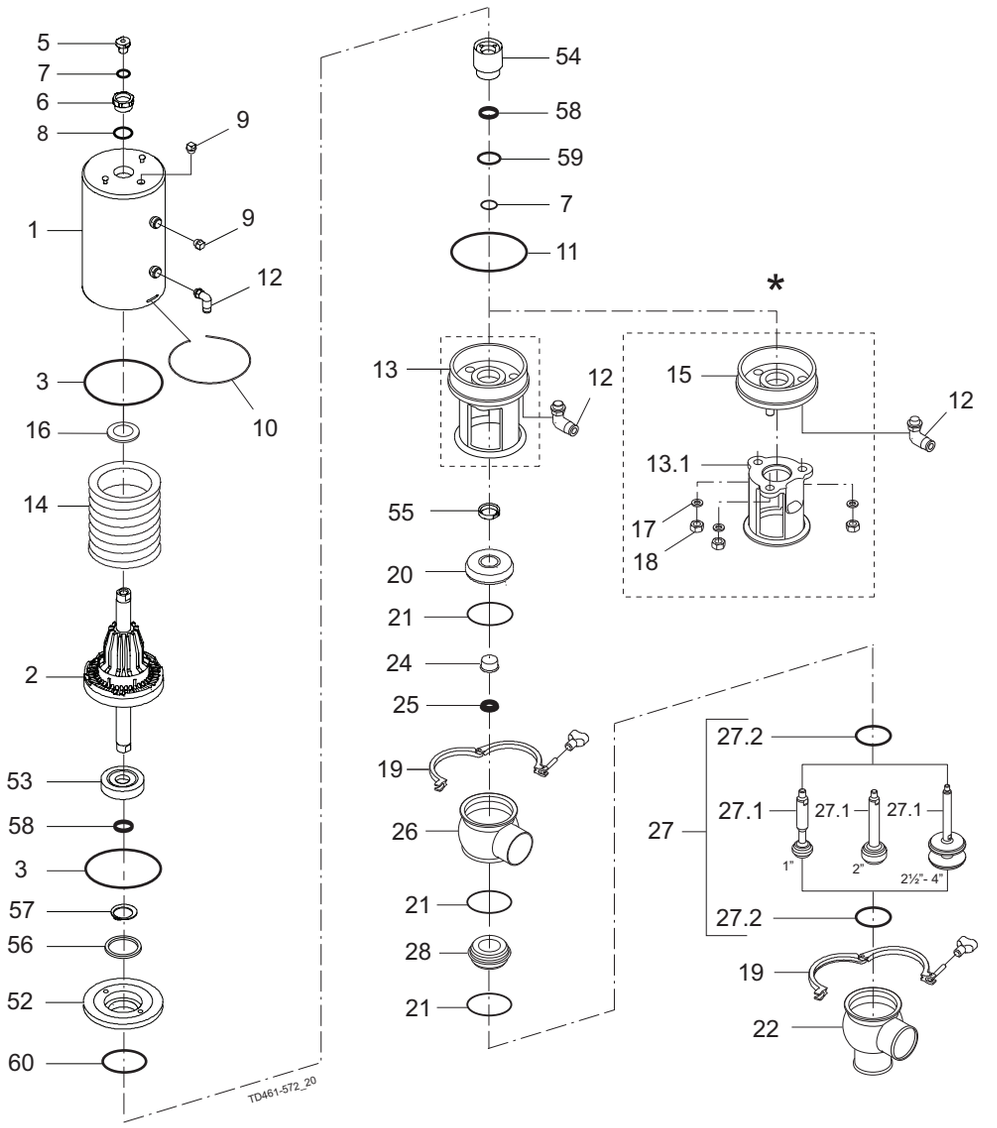

*) "Remove yoke with bolts" version, produced from 2006 to June 2016.
Replaced by "yoke without bolts" (13)

Pos	Qty	Denomination	1½"	2"	2½"	3"	4"
Clamp							
19	1	Clamp	9612939316	9612939317	9612939318	9612939319	9612939320
Bonnet							
20	1	Bonnet	9613127102	9613127103	9613127104	9613127105	9613127106
21 ♦	3	O-ring, , EPDM (standard)					
	3	O-ring, , HNBR					
	3	O-ring, , FPM					
		O-ring, , set (10 pcs.) EPDM	9614059422	9614059425	9614059428	9614059431	9614059434
		O-ring, , set (10 pcs.) HNBR	9614059423	9614059426	9614059429	9614059432	9614059435
		O-ring, , set (10 pcs.) FPM	9614059424	9614059427	9614059430	9614059433	9614059436
24	1	Bushing	9613125002	9613125002	9613125002	9613125002	9613125002
25 ♦	1	Lip seal, , EPDM (standard)					
	1	Lip seal, , HNBR					
	1	Lip seal, , FPM					
		Lip seal, , set (10 pcs.) EPDM	9614059419	9614059419	9614059419	9614059419	9614059419
		Lip seal, , set (10 pcs.) HNBR	9614059420	9614059420	9614059420	9614059420	9614059420
		Lip seal, , set (10 pcs.) FPM	9614059421	9614059421	9614059421	9614059421	9614059421
Seat							
28	1	Seat	9613127502	9613127503	9613127504	9613127505	9613127506
Valve Body							
26	1	Valve body, , upper, 1 ports , clamp	9613161503	9613161505	9613161507	9613161509	9613161511
	1	Valve body, , upper, 2 ports , clamp	9613161504	9613161506	9613161508	9613161510	9613161512
	1	Valve body, , upper, 1 ports, welding ends	9613139315	9613139317	9613139319	9613139321	9613139323
	1	Valve body, , upper, 2 ports, welding ends	9613139316	9613139318	9613139320	9613139322	9613139324
22	1	Valve body, , lower, 2 ports , clamp	9613161603	9613161605	9613161607	9613161609	9613161611
	1	Valve body, , lower, 3 ports, clamp	9613161604	9613161606	9613161608	9613161610	9613161612
	1	Valve body, , lower, 2 ports , welding ends	9613139515	9613139517	9613139519	9613139521	9613139523
	1	Valve body, , lower, 3 ports ,welding ends	9613139516	9613139518	9613139520	9613139522	9613139524
Valve Plug							
27	1	Plug, , change over, ISO complete, EPDM (standard)	9613127702	9613127703	9613127704	9613127705	9613127706
	1	Plug, , change over, ISO complete, HNBR	9613127714	9613127715	9613127716	9613127717	9613127718
	1	Plug, , change over, ISO complete, FPM	9613127726	9613127727	9613127728	9613127729	9613127730
	1	Plug, , change over, DIN complete, EPDM (standard)	9613127708	9613127709	9613127710	9613127711	9613127712
	1	Plug, , change over, DIN complete, HNBR	9613127720	9613127721	9613127722	9613127723	9613127724
	1	Plug, , change over, DIN complete, FPM	9613127732	9613127733	9613127734	9613127735	9613127736
27.1	1	Plug, , change over, ISO	9613140002	9613140003	9613140004	9613140005	9613140006
	1	Plug, , change over, DIN	9613140008	9613140009	9613140010	9613140011	9613140012
27.2♦	2	Plug, seal, EPDM (standard)					
	2	Plug , seal, HNBR					
	2	Plug , seal, FPM					
		Plug , seal, set (10 pcs.) EPDM	9614059404	9614059407	9614059410	9614059413	9614059416
		Plug , seal, set (10 pcs.) HNBR	9614059405	9614059408	9614059411	9614059414	9614059417
		Plug , seal, set (10 pcs.) FPM	9614059406	9614059409	9614059412	9614059415	9614059418
			1½"	2"	2½"	3"	4"

Recommended spare parts: Service kits.

■	**Service kit, Actuator**	**9611926738**	**9611926738**	**9611926738**	**9611926739**	**9611926739**
♦	**Service kit, EPDM**	**9611926580**	**9611926581**	**9611926582**	**9611926583**	**9611926584**
♦	**Service kit, HNBR**	**9611926586**	**9611926587**	**9611926588**	**9611926589**	**9611926590**
♦	**Service kit, FPM**	**9611926592**	**9611926593**	**9611926594**	**9611926595**	**9611926596**

Parts marked with ♦■ are included in the service kits (actuator)
Recommended spare parts: Service kits

TD900468/3

If the actuator is marked with a danger warning do NOT attempt to cut the actuator open.



Do NOT attempt to disassemble the actuator due to spring under load danger!



Do NOT attempt to cut the actuator open, due to spring under load danger!

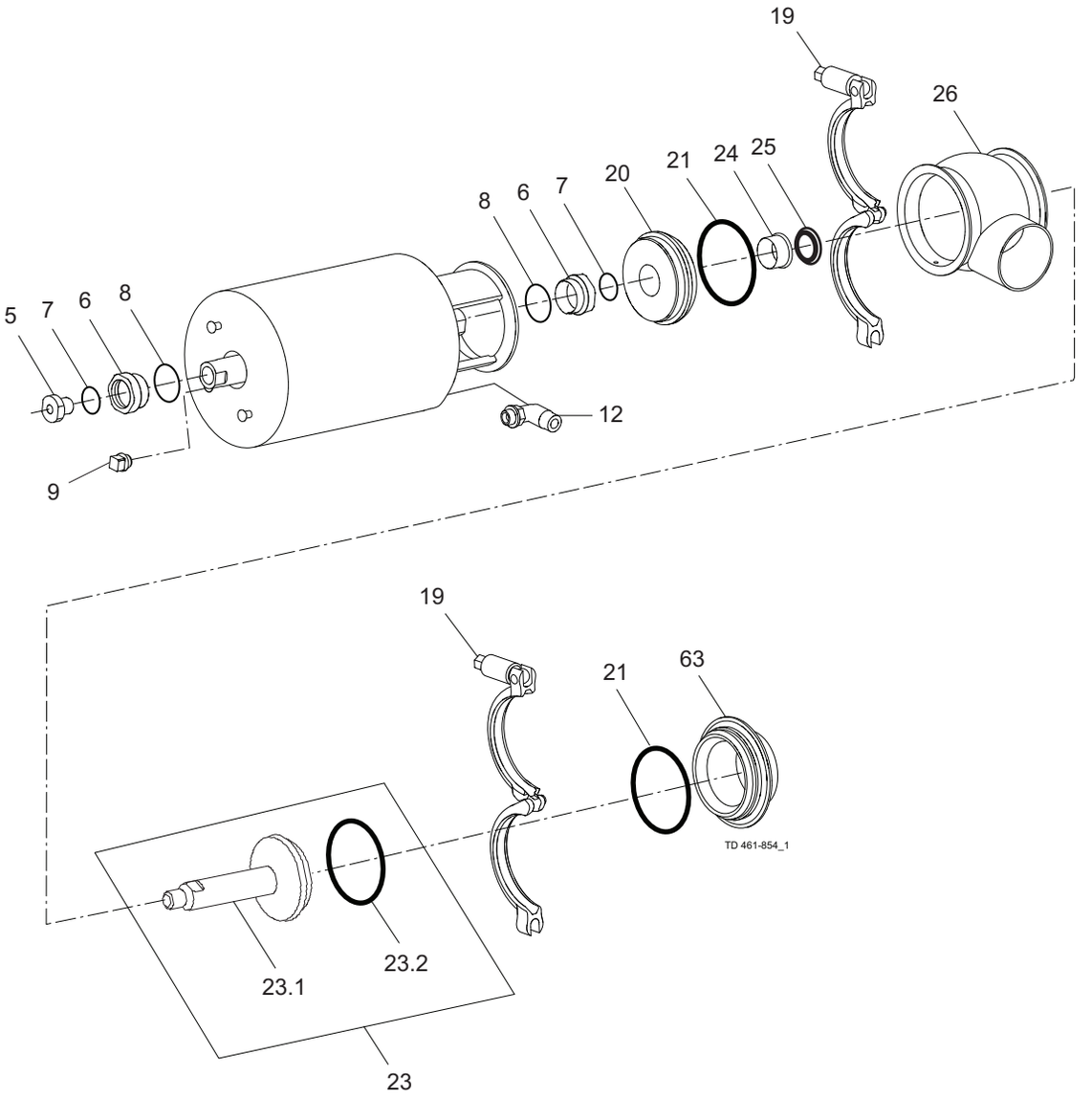

Pos		Qty	Denomination	51 mm	63.5 mm	76.1 mm	101.6 mm
Actuator							
			Actuator, complete (NO)	9613154802	9613154803	9613154804	9613154805
			Actuator, complete (NC)	9613154807	9613154808	9613154809	9613154810
			Actuator, complete (A/A)	9613154812	9613154813	9613154814	9613154815
5		1	Adapter, plastic, (- 0115)				
		1	Adapter, steel, (0115 - 0518)				
		1	Adapter, steel, (0518 -)	9615374701	9615374701	9615374701	9615374701
6	□	2	Bushing				
7	□	2	O-ring				
8	□	2	O-ring				
9		1	Plug	9613414101	9613414101	9613414101	9613414101
12		1(2)	Air fitting	9611991988	9611991988	9611991988	9611991988
Clamp							
19		2	Clamp	9612939304	9612939305	9612939306	9612939307
Bonnet							
20		1	Bonnet	9613127103	9613127104	9613127105	9613127106
21	♦	2	O-ring, EPDM (standard)				
		2	O-ring, HNBR				
		2	O-ring, FPM				
			O-ring set (10 pcs.) EPDM	9614059425	9614059428	9614059431	9614059434
			O-ring set (10 pcs.) HNBR	9614059426	9614059429	9614059432	9614059435
			O-ring set (10 pcs.) FPM	9614059427	9614059430	9614059433	9614059436
24		1	Bushing	9613125002	9613125002	9613125002	9613125002
25	♦	1	Lip seal, EPDM (standard)				
		1	Lip seal, HNBR				
		1	Lip seal, FPM				
			Lip seal set (10 pcs.) EPDM	9614059419	9614059419	9614059419	9614059419
			Lip seal set (10 pcs.) HNBR	9614059420	9614059420	9614059420	9614059420
			Lip seal set (10 pcs.) FPM	9614059421	9614059421	9614059421	9614059421
Valve Body							
26		1	Valve body, 1 port, welding ends	9613444801	9613444803	9613444805	9613444807
		1	Valve body, 2 ports, welding ends	9613444802	9613444804	9613444806	9613444808
63		1	Port seal element, welding ends	9634071101	9634071201	9634071301	9634071401
Valve Plug							
23		1	Plug, shut-off, complete, EPDM (standard)	9613138803	9613138804	9613138805	9613138806
		1	Plug, shut-off, complete, HNBR	9613138815	9613138816	9613138817	9613138818
		1	Plug, shut-off, complete, FPM	9613138827	9613138828	9613138829	9613138830
23.1		1	Plug, shut-off	9613139803	9613139804	9613139805	9613139806
23.2	♦	1	Plug seal, EPDM (standard)				
		1	Plug seal, HNBR				
		1	Plug seal, FPM				
			Plug seal set (10 pcs.) EPDM	9614059407	9614059410	9614059413	9614059416
			Plug seal set (10 pcs.) HNBR	9614059408	9614059411	9614059414	9614059417
			Plug seal set (10 pcs.) FPM	9614059409	9614059412	9614059415	9614059418

	51 mm	63.5 mm	76.1 mm	101.6 mm
Service kit for actuator				
□ Service kit	**9611926500**	**9611926500**	**9611926500**	**9611926500**
Service kit for product wetted parts, standard				
♦ Service kit, EPDM	**9611926743**	**9611926744**	**9611926745**	**9611926746**
♦ Service kit, HNBR	**9611926747**	**9611926748**	**9611926749**	**9611926750**
♦ Service kit, FPM	**9611926751**	**9611926752**	**9611926753**	**9611926754**

Parts marked with □♦ are included in the service kits.
Recommended spare parts: Service kits.

TD 900-483/2

If the actuator is marked with a danger warning do NOT attempt to cut the actuator open.



Do NOT attempt to disassemble the actuator due to spring under load danger.



Do NOT attempt to cut the actuator open, due to spring under load danger.

AND



Do NOT attempt to cut the actuator open, due to spring under load danger.

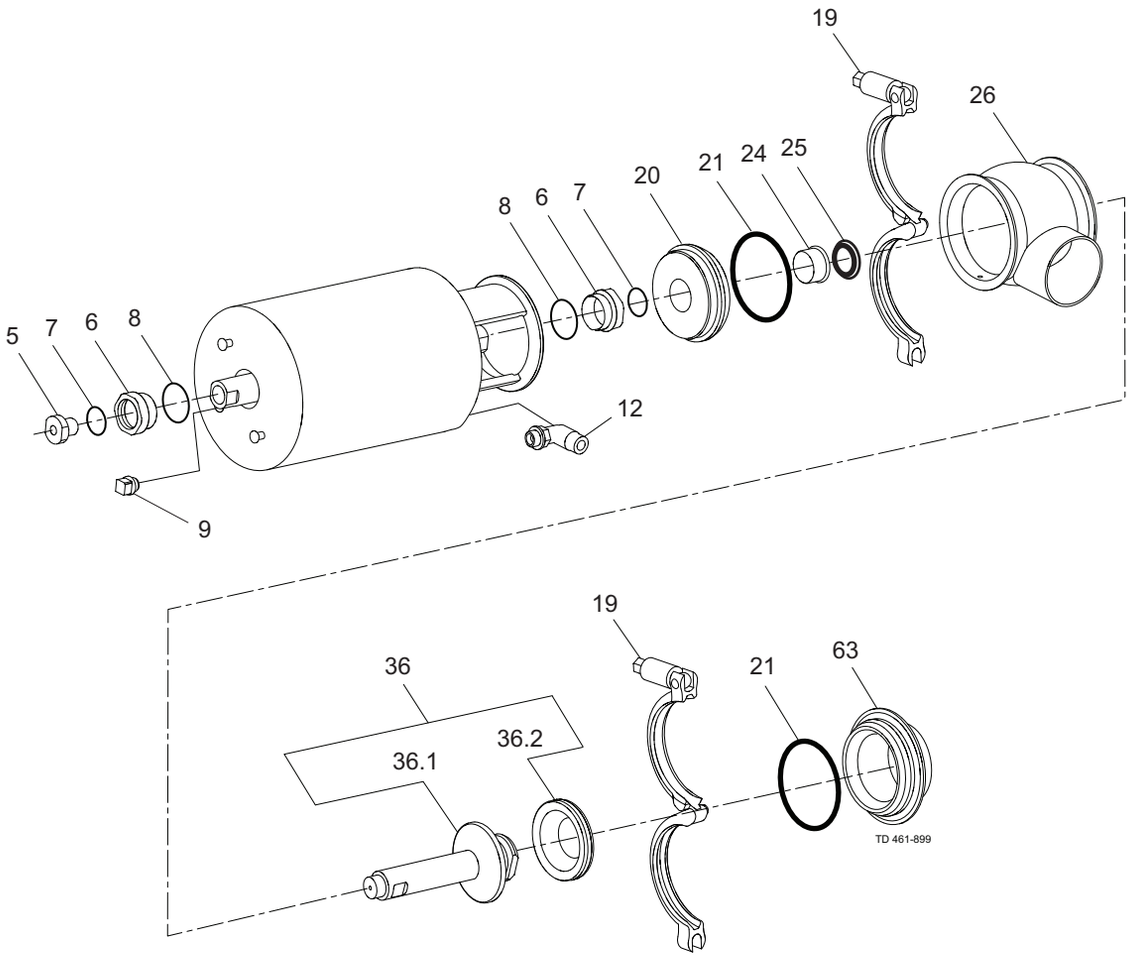

Pos	Qty	Denomination	2”	2½”	3”	4”
		Actuator, complete (NO)	9613154832	9613154833	9613154834	9613154835
		Actuator, complete (NC)	9613163137	9613154838	9613154839	9613163140
		Actuator, complete (A/A)	9613163142	9613163143	9613163144	9613163145
5	1	Adapter, plastic (- 0115)				
	1	Adapter, steel (0115 - 0518)				
	1	Adapter, steel (0518 -)	9615374701	9615374701	9615374701	9615374701
6 □	2	Bushing				
7 □	2	O-ring				
8 □	2	O-ring				
9	1	Plug	9613414101	9613414101	9613414101	9613414101
12	1(2)	Air fitting	9611994682	9611994682	9611994682	9611994682
Clamp						
19	2	Clamp	9612939323	9612939324	9612939325	9612939326
Bonnet						
20	1	Bonnet	9613127103	9613127104	9613127105	9613127106
21 ♦	2	O-ring, EPDM (standard)				
	2	O-ring, HNBR				
	2	O-ring, FPM				
		O-ring, set (10 pcs.) EPDM	9614059425	9614059428	9614059431	9614059434
		O-ring, set (10 pcs.) HNBR	9614059426	9614059429	9614059432	9614059435
		O-ring, set (10 pcs.) FPM	9614059427	9614059430	9614059433	9614059436
24	1	Bushing	9613125002	9613125002	9613125002	9613125002
25 ♦	1	Lip seal, EPDM (standard)				
	1	Lip seal, HNBR				
	1	Lip seal, FPM				
		Lip seal, set (10 pcs.) EPDM	9614059419	9614059419	9614059419	9614059419
		Lip seal, set (10 pcs.) HNBR	9614059420	9614059420	9614059420	9614059420
		Lip seal, set (10 pcs.) FPM	9614059421	9614059421	9614059421	9614059421
Valve Body						
26	1	Valve body, 1 port, clamp	9613169002	9613169004	9613169006	9613169008
	1	Valve body, 2 ports, clamp	9613169018	9613169020	9613169022	9613169024
	1	Valve body, 1 port, welding ends	9613444809	9613444811	9613444813	9613444815
	1	Valve body, 2 ports, welding ends	9613444810	9613444812	9613444814	9613444816
63	1	Port seal element, clamp	9634070601	9634070701	9634070801	9634070901
	1	Port seal element, welding ends	9634071101	9634071201	9634071301	9634071401
Valve Plug						
36	1	Plug, shut-off, complete	9613155803	9613155804	9613155805	9613155806
36.1	1	Plug, shut-off	9613151102	9613151103	9613151104	9613151105
36.2♦	1	Plug seal, PTFE				
		Plug seal, set (10 pcs.) PTFE	9614059450	9614059451	9614059452	9614059453

		2”	2½”	3”	4”
Actuator					
□	**Service kit**	**9611926500**	**9611926500**	**9611926500**	**9611926500**
Product wetted parts					
♦	**Service kit, EPDM**	**9611926767**	**9611926768**	**9611926769**	**9611926770**
♦	**Service kit, HNBR**	**9611926771**	**9611926772**	**9611926773**	**9611926774**
♦	**Service kit, FPM**	**9611926775**	**9611926776**	**9611926777**	**9611926778**

Recommended spare parts: Service kits

Parts marked with □ are included in the service kits (actuator).
Parts marked with • are included in the service kits (product wetted parts).

TD 900488/2

If the actuator is marked with a danger warning do NOT attempt to cut the actuator open.



Do NOT attempt to disassemble the actuator due to spring under load danger.



Do NOT attempt to cut the actuator open, due to spring under load danger.

AND



Do NOT attempt to cut the actuator open, due to spring under load danger.

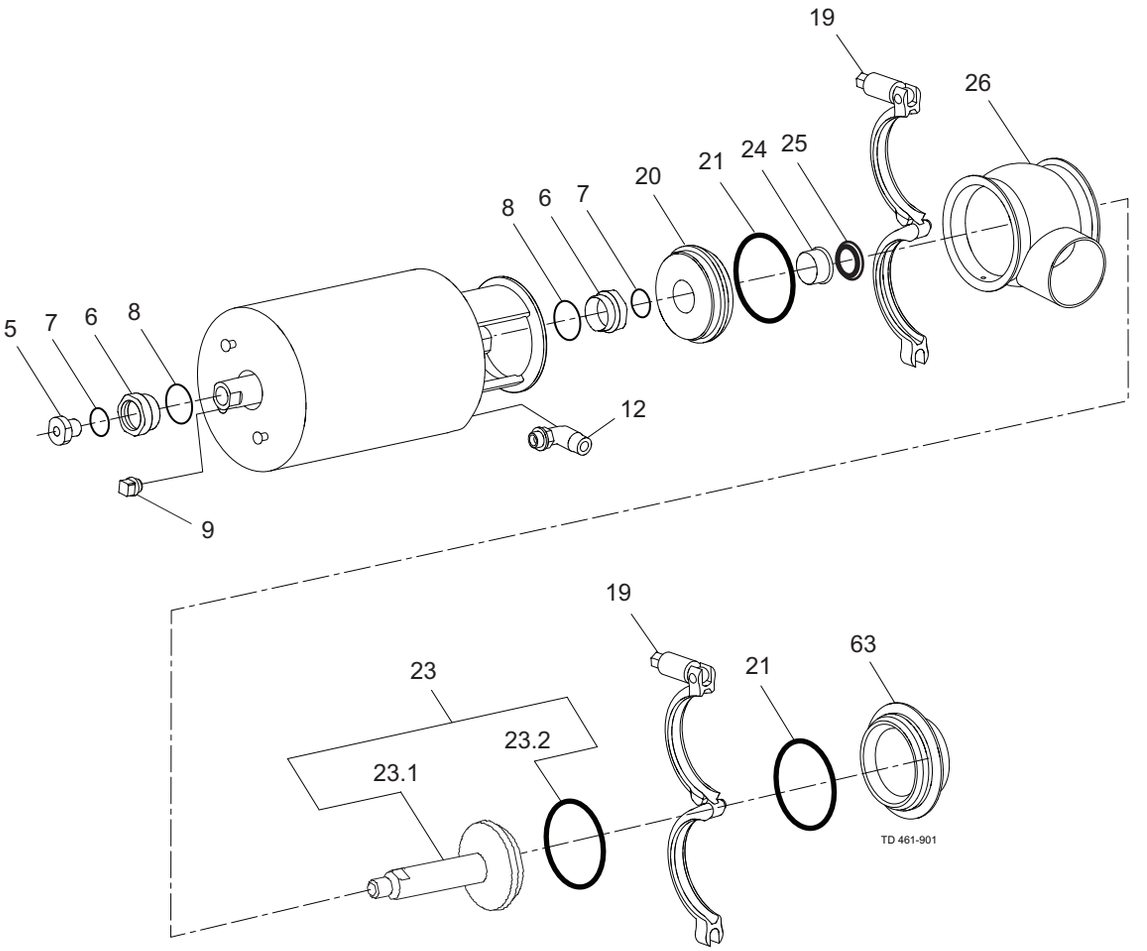

Pos	Qty	Denomination	2”	2½”	3”	4”
		Actuator, complete (NO)	9613154832	9613154833	9613154834	9613154835
		Actuator, complete (NC)	9613163137	9613154838	9613154839	9613163140
		Actuator, complete (A/A)	9613163142	9613163143	9613163144	9613163145
5	1	Adapter, plastic (- 0115)				
	1	Adapter, steel (0115 - 0518)				
	1	Adapter, steel (0518 -)	9615374701	9615374701	9615374701	9615374701
6 □	2	Bushing				
7 □	2	O-ring				
8 □	2	O-ring				
9	1	Plug	9613414101	9613414101	9613414101	9613414101
12	1(2)	Air fitting	9611994682	9611994682	9611994682	9611994682
Clamp						
19	2	Clamp	9612939323	9612939324	9612939325	9612939326
Bonnet						
20	1	Bonnet	9613127103	9613127104	9613127105	9613127106
21 ♦	2	O-ring, EPDM (standard)				
	2	O-ring, HNBR				
	2	O-ring, FPM				
		O-ring, set (10 pcs.) EPDM	9614059425	9614059428	9614059431	9614059434
		O-ring, set (10 pcs.) HNBR	9614059426	9614059429	9614059432	9614059435
		O-ring, set (10 pcs.) FPM	9614059427	9614059430	9614059433	9614059436
24	1	Bushing	9613125002	9613125002	9613125002	9613125002
25 ♦	1	Lip seal, EPDM (standard)				
	1	Lip seal, HNBR				
	1	Lip seal, FPM				
		Lip seal, set (10 pcs.) EPDM	9614059419	9614059419	9614059419	9614059419
		Lip seal, set (10 pcs.) HNBR	9614059420	9614059420	9614059420	9614059420
		Lip seal, set (10 pcs.) FPM	9614059421	9614059421	9614059421	9614059421
Valve Body						
26	1	Valve body, 1 port, clamp	9613169002	9613169004	9613169006	9613169008
	1	Valve body, 2 ports, clamp	9613169018	9613169020	9613169022	9613169024
	1	Valve body, 1 port, welding ends	9613444809	9613444811	9613444813	9613444815
	1	Valve body, 2 ports, welding ends	9613444810	9613444812	9613444814	9613444816
63	1	Port seal element, clamp	9634070601	9634070701	9634070801	9634070901
	1	Port seal element, welding ends	9634071101	9634071201	9634071301	9634071401
Valve Plug						
23	1	Plug, shut off, complete, EPDM (standard)	9613138803	9613138804	9613138805	9613138806
	1	Plug, shut off, complete, HNBR	9613138815	9613138816	9613138817	9613138818
	1	Plug, shut off, complete, FPM	9613138827	9613138828	9613138829	9613138830
23.1	1	Plug, shut off	9613139803	9613139804	9613139805	9613139806
23.2♦	1	Plug seal, EPDM (standard)				
	1	Plug seal, HNBR				
	1	Plug seal, FPM				
		Plug seal, set (10 pcs.) EPDM	9614059407	9614059410	9614059413	9614059416
		Plug seal, set (10 pcs.) HNBR	9614059408	9614059411	9614059414	9614059417
		Plug seal, set (10 pcs.) FPM	9614059409	9614059412	9614059415	9614059418

	2”	2½”	3”	4”
Actuator				
Service kit	**9611926500**	**9611926500**	**9611926500**	**9611926500**
Product wetted parts				
Service kit, EPDM	**9611926743**	**9611926744**	**9611926745**	**9611926746**
Service kit, HNBR	**9611926747**	**9611926748**	**9611926749**	**9611926750**
Service kit, FPM	**9611926751**	**9611926752**	**9611926753**	**9611926754**

Recommended spare parts: Service kits

Parts marked with □ are included in the service kits (actuator).
Parts marked with • are included in the service kits (product wetted parts).

TD 900489/1

If the actuator is marked with a danger warning do NOT attempt to cut the actuator open.



Do NOT attempt to disassemble the actuator due to spring under load danger!



Do NOT attempt to cut the actuator open, due to spring under load danger!

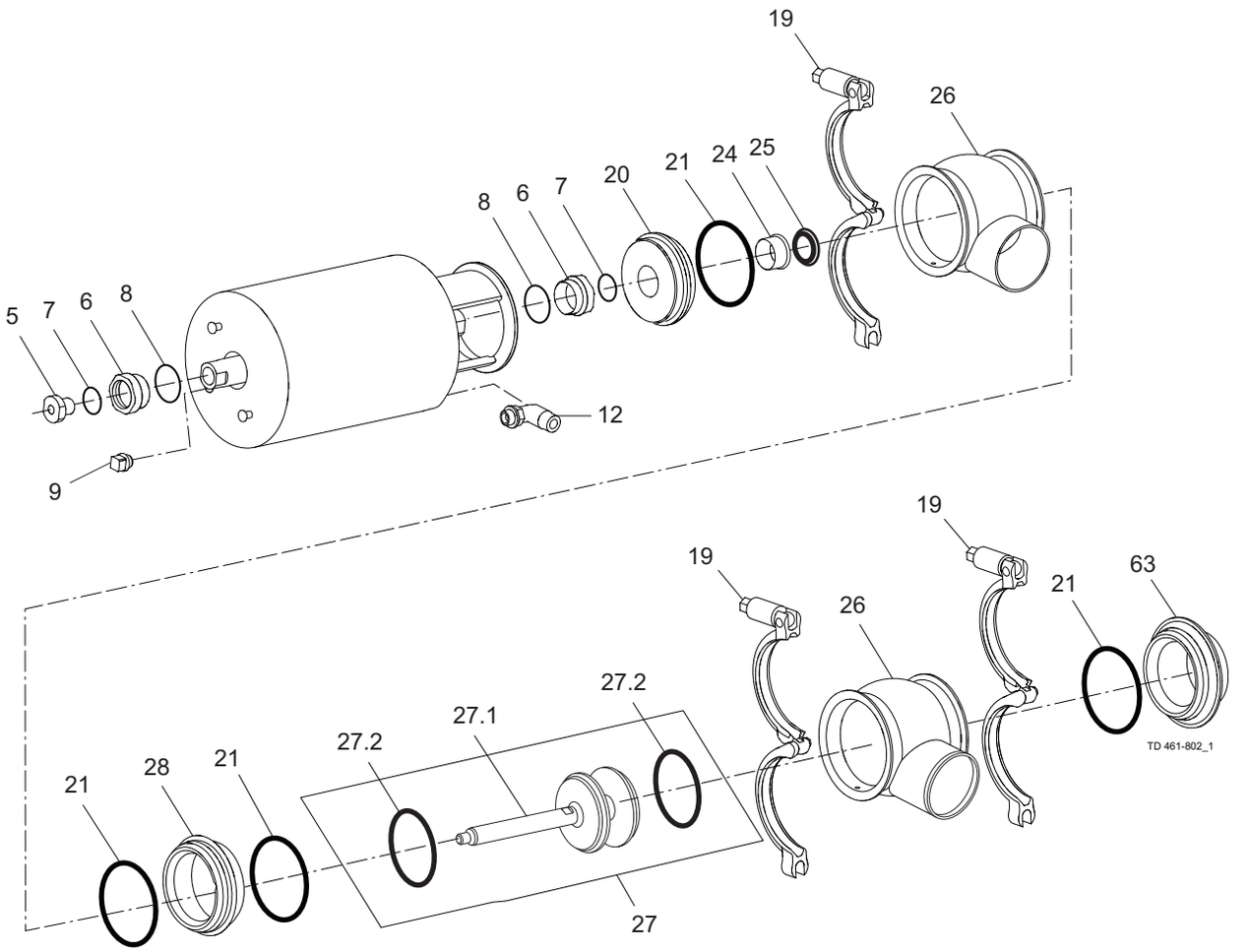

Pos		Qty	Denomination	51 mm	63.5 mm	76.1 mm	101.6 mm
Actuator							
			Actuator, complete (NO)	9613154802	9613154803	9613154804	9613154805
			Actuator, complete (NC)	9613154807	9613154808	9613154809	9613154810
			Actuator, complete (A/A)	9613154812	9613154813	9613154814	9613154815
5		1	Adapter, plastic (- 0115)				
		1	Adapter, steel (0115 - 0518)				
		1	Adapter, steel (0518 -)	9615374701	9615374701	9615374701	9615374701
6	□	2	Bushing				
7	□	2	O-ring				
8	□	2	O-ring				
9		1	Plug	9613414101	9613414101	9613414101	9613414101
12		1(2)	Air fitting	9611991988	9611991988	9611991988	9611991988
Clamp							
19		3	Clamp	9612939304	9612939305	9612939306	9612939307
Bonnet							
20		1	Bonnet	9613127103	9613127104	9613127105	9613127106
21	♦	4	O-ring, EPDM (standard)				
		4	O-ring, HNBR				
		4	O-ring, FPM				
			O-ring set (10 pcs.) EPDM	9614059425	9614059428	9614059431	9614059434
			O-ring set (10 pcs.) HNBR	9614059426	9614059429	9614059432	9614059435
			O-ring set (10 pcs.) FPM	9614059427	9614059430	9614059433	9614059436
24		1	Bushing	9613125002	9613125002	9613125002	9613125002
25	♦	1	Lip seal, EPDM (standard)				
		1	Lip seal, HNBR				
		1	Lip seal, FPM				
			Lip seal set (10 pcs.) EPDM	9614059419	9614059419	9614059419	9614059419
			Lip seal set (10 pcs.) HNBR	9614059420	9614059420	9614059420	9614059420
			Lip seal set (10 pcs.) FPM	9614059421	9614059421	9614059421	9614059421
Seat							
28		1	Seat	9613127503	9613127504	9613127505	9613127506
Valve Body							
26		1	Valve body, 1 port, welding ends	9613444801	9613444803	9613444805	9613444807
		1	Valve body, 2 ports, welding ends	9613444802	9613444804	9613444806	9613444808
63		1	Port seal element, welding ends	9634071101	9634071201	9634071301	9634071401
Valve Plug							
27		1	Plug, change-over, complete, EPDM (standard)	9613127703	9613127704	9613127705	9613127706
		1	Plug, change-over, complete, HNBR	9613127715	9613127716	9613127717	9613127718
		1	Plug, change-over, complete, FPM	9613127727	9613127728	9613127729	9613127730
27.1		1	Plug, change-over	9613140003	9613140004	9613140005	9613140006
27.2	♦	2	Plug seal, EPDM (standard)				
		2	Plug seal, HNBR				
		2	Plug seal, FPM				
			Plug seal set (10 pcs.) EPDM	9614059407	9614059410	9614059413	9614059416
			Plug seal set (10 pcs.) HNBR	9614059408	9614059411	9614059414	9614059417
			Plug seal set (10 pcs.) FPM	9614059409	9614059412	9614059415	9614059418

		51 mm	63.5 mm	76.1 mm	101.6 mm
Service kit for Actuator					
□	**Service kit, actuator**	**9611926500**	**9611926500**	**9611926500**	**9611926500**
Service kit for Product wetted parts, standard					
♦	**Service kit, EPDM**	**9611926755**	**9611926756**	**9611926757**	**9611926758**
♦	**Service kit, HNBR**	**9611926759**	**9611926760**	**9611926761**	**9611926762**
♦	**Service kit, FPM**	**9611926763**	**9611926764**	**9611926765**	**9611926766**

Parts marked with □♦ are included in the service kits.
Recommended spare parts: Service kits.

TD 900-483/2

If the actuator is marked with a danger warning do NOT attempt to cut the actuator open.



Do NOT attempt to disassemble the actuator due to spring under load danger.



Do NOT attempt to cut the actuator open, due to spring under load danger.

AND



Do NOT attempt to cut the actuator open, due to spring under load danger.

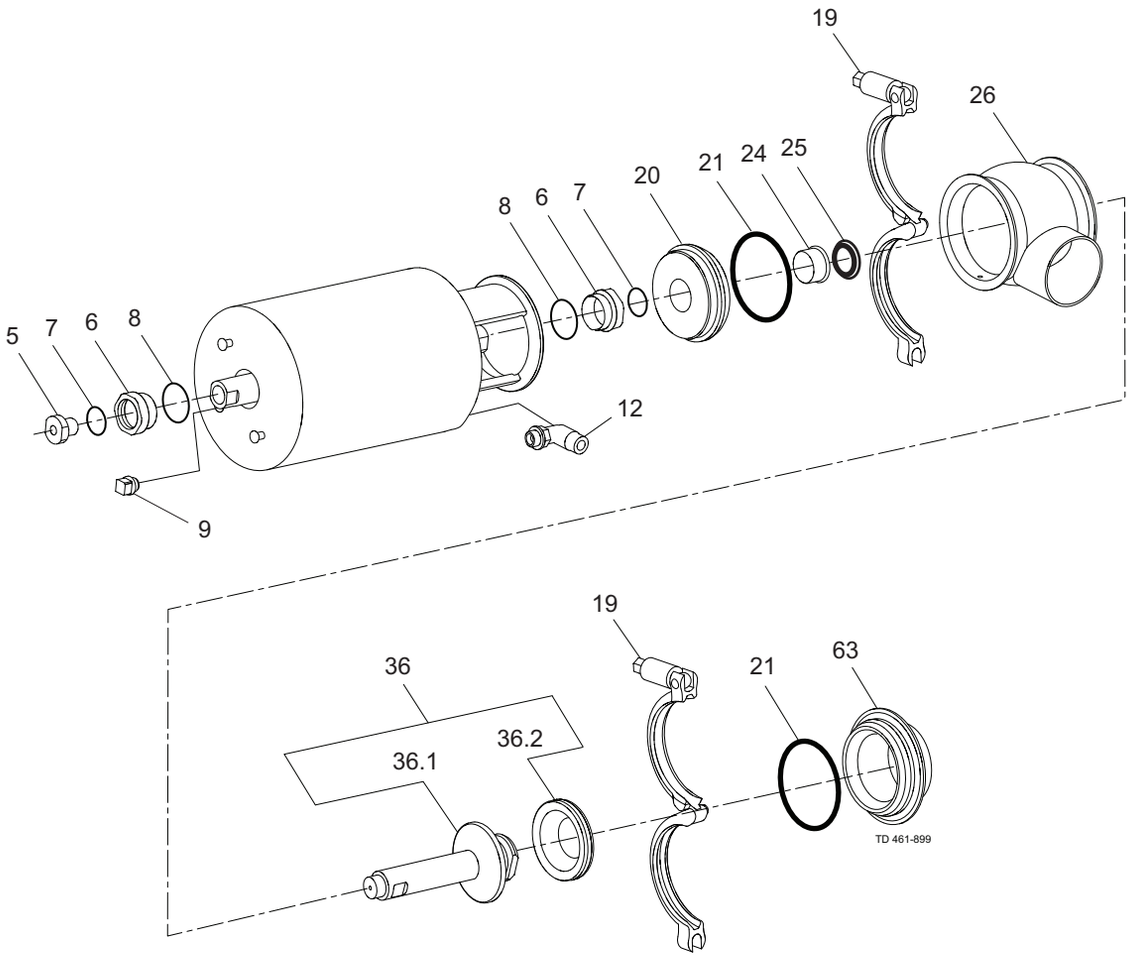

Pos	Qty	Denomination	2”	2½”	3”	4”
		Actuator, complete (NO)	9613154832	9613154833	9613154834	9613154835
		Actuator, complete (NC)	9613163137	9613154838	9613154839	9613163140
		Actuator, complete (A/A)	9613163142	9613163143	9613163144	9613163145
5	1	Adapter, plastic (- 0115)				
	1	Adapter, steel (0115 - 0518)				
	1	Adapter, steel (0518 -)	9615374701	9615374701	9615374701	9615374701
6 □	2	Bushing				
7 □	2	O-ring				
8 □	2	O-ring				
9	1	Plug	9613414101	9613414101	9613414101	9613414101
12	1(2)	Air fitting	9611994682	9611994682	9611994682	9611994682
Clamp						
19	2	Clamp	9612939323	9612939324	9612939325	9612939326
Bonnet						
20	1	Bonnet	9613127103	9613127104	9613127105	9613127106
21 ♦	2	O-ring, EPDM (standard)				
	2	O-ring, HNBR				
	2	O-ring, FPM				
		O-ring, set (10 pcs.) EPDM	9614059425	9614059428	9614059431	9614059434
		O-ring, set (10 pcs.) HNBR	9614059426	9614059429	9614059432	9614059435
		O-ring, set (10 pcs.) FPM	9614059427	9614059430	9614059433	9614059436
24	1	Bushing	9613125002	9613125002	9613125002	9613125002
25 ♦	1	Lip seal, EPDM (standard)				
	1	Lip seal, HNBR				
	1	Lip seal, FPM				
		Lip seal, set (10 pcs.) EPDM	9614059419	9614059419	9614059419	9614059419
		Lip seal, set (10 pcs.) HNBR	9614059420	9614059420	9614059420	9614059420
		Lip seal, set (10 pcs.) FPM	9614059421	9614059421	9614059421	9614059421
Valve Body						
26	1	Valve body, 1 port, clamp	9613169002	9613169004	9613169006	9613169008
	1	Valve body, 2 ports, clamp	9613169018	9613169020	9613169022	9613169024
	1	Valve body, 1 port, welding ends	9613444809	9613444811	9613444813	9613444815
	1	Valve body, 2 ports, welding ends	9613444810	9613444812	9613444814	9613444816
63	1	Port seal element, clamp	9634070601	9634070701	9634070801	9634070901
	1	Port seal element, welding ends	9634071101	9634071201	9634071301	9634071401
Valve Plug						
36	1	Plug, shut-off, complete	9613155803	9613155804	9613155805	9613155806
36.1	1	Plug, shut-off	9613151102	9613151103	9613151104	9613151105
36.2♦	1	Plug seal, PTFE				
		Plug seal, set (10 pcs.) PTFE	9614059450	9614059451	9614059452	9614059453

		2”	2½”	3”	4”
Actuator					
□	**Service kit**	**9611926500**	**9611926500**	**9611926500**	**9611926500**
Product wetted parts					
♦	**Service kit, EPDM**	**9611926767**	**9611926768**	**9611926769**	**9611926770**
♦	**Service kit, HNBR**	**9611926771**	**9611926772**	**9611926773**	**9611926774**
♦	**Service kit, FPM**	**9611926775**	**9611926776**	**9611926777**	**9611926778**

Recommended spare parts: Service kits

Parts marked with □ are included in the service kits (actuator).
Parts marked with • are included in the service kits (product wetted parts).

TD 900488/2

If the actuator is marked with a danger warning do NOT attempt to cut the actuator open.



Do NOT attempt to disassemble the actuator due to spring under load danger.



Do NOT attempt to cut the actuator open, due to spring under load danger.

AND



Do NOT attempt to cut the actuator open, due to spring under load danger.

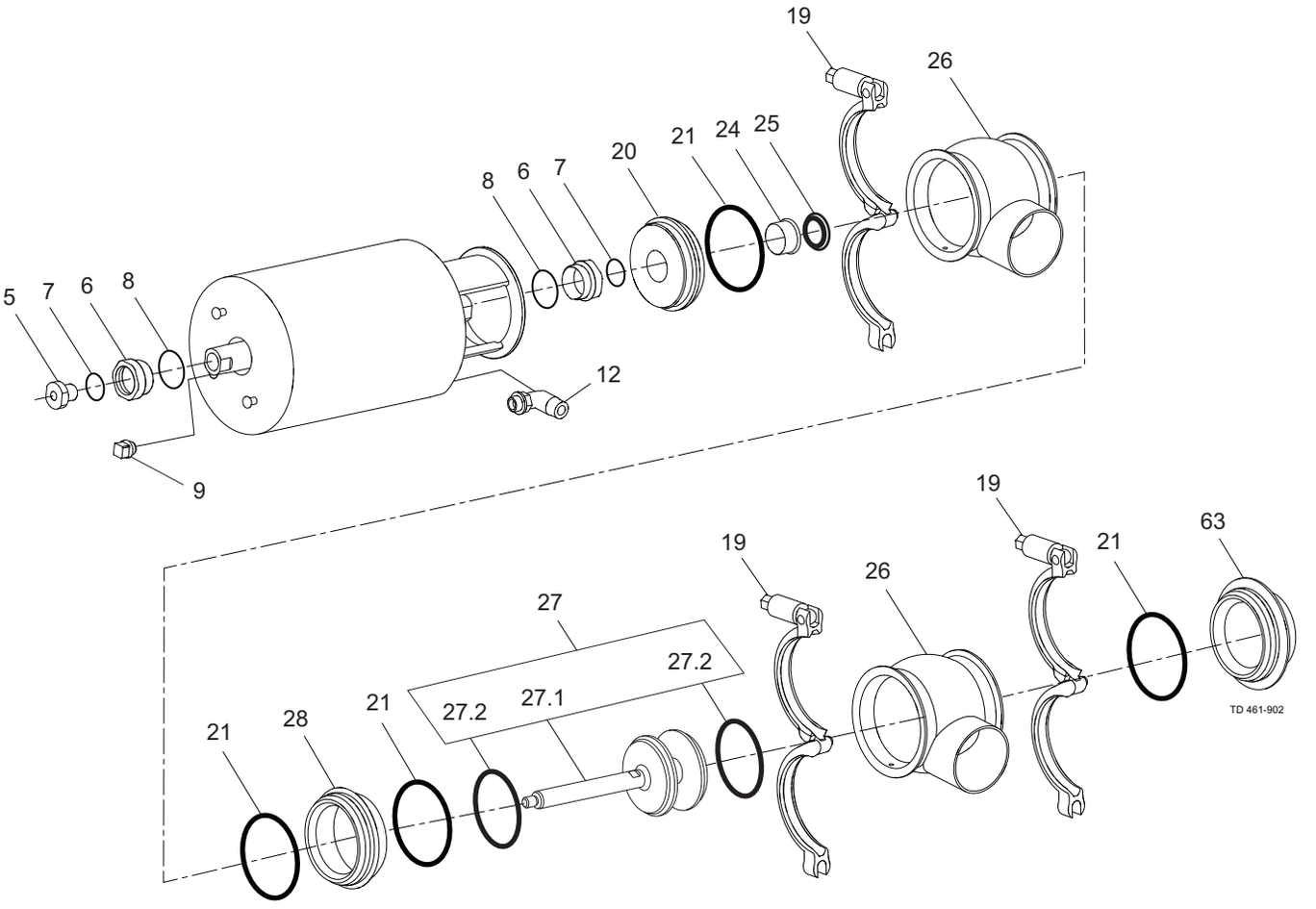

Pos	Qty	Denomination	2”	2½”	3”	4”
		Actuator, complete (NO)	9613154832	9613154833	9613154834	9613154835
		Actuator, complete (NC)	9613154837	9613154838	9613154839	9613154840
		Actuator, complete (A/A)	9613154842	9613154843	9613154844	9613154845
5	1	Adapter, plastic (- 0115)				
	1	Adapter, steel (0115 - 0518)				
	1	Adapter, steel (0518 -)	9615374701	9615374701	9615374701	9615374701
6 □	2	Bushing				
7 □	2	O-ring				
8 □	2	O-ring				
9	1	Plug	9613414101	9613414101	9613414101	9613414101
12	1(2)	Air fitting	9611994682	9611994682	9611994682	9611994682
Clamp						
19	3	Clamp	9612939323	9612939324	9612939325	9612939326
Bonnet						
20	1	Bonnet	9613127103	9613127104	9613127105	9613127106
21 ♦	4	O-ring, EPDM (standard)				
	4	O-ring, HNBR				
	4	O-ring, FPM				
		O-ring, set (10 pcs.) EPDM	9614059425	9614059428	9614059431	9614059434
		O-ring, set (10 pcs.) HNBR	9614059426	9614059429	9614059432	9614059435
		O-ring, set (10 pcs.) FPM	9614059427	9614059430	9614059433	9614059436
24	1	Bushing	9613125002	9613125002	9613125002	9613125002
25 ♦	1	Lip seal, EPDM (standard)				
	1	Lip seal, HNBR				
	1	Lip seal, FPM				
		Lip seal, set (10 pcs.) EPDM	9614059419	9614059419	9614059419	9614059419
		Lip seal, set (10 pcs.) HNBR	9614059420	9614059420	9614059420	9614059420
		Lip seal, set (10 pcs.) FPM	9614059421	9614059421	9614059421	9614059421
Seat						
28	1	Seat	9613127503	9613127504	9613127505	9613127506
Valve Body						
26	2	Valve body, 1 port, clamp	9613169002	9613169004	9613169006	9613169008
	2	Valve body, 2 ports, clamp	9613169018	9613169020	9613169022	9613169024
	2	Valve body, 1 port, welding ends	9613444809	9613444811	9613444813	9613444815
	2	Valve body, 2 ports, welding ends	9613444810	9613444812	9613444814	9613444816
63	1	Port seal element, clamp	9634070601	9634070701	9634070801	9634070901
	1	Port seal element, welding ends	9634071101	9634071201	9634071301	9634071401
Valve Plug						
27	1	Plug, change over, ISO complete, EPDM (standard)	9613127703	9613127704	9613127705	9613127706
	1	Plug, change over, ISO complete, HNBR	9613127715	9613127716	9613127717	9613127718
	1	Plug, change over, ISO complete, FPM	9613127727	9613127728	9613127729	9613127730
27.1	1	Plug, change over, ISO	9613140003	9613140004	9613140005	9613140006
27.2♦	2	Plug seal, EPDM (standard)				
	2	Plug seal, HNBR				
	2	Plug seal, FPM				
		Plug seal, set (10 pcs.) EPDM	9614059407	9614059410	9614059413	9614059416
		Plug seal, set (10 pcs.) HNBR	9614059408	9614059411	9614059414	9614059417
		Plug seal, set (10 pcs.) FPM	9614059409	9614059412	9614059415	9614059418

	2”	2½”	3”	4”
Actuator				
Service kit	**9611926500**	**9611926500**	**9611926500**	**9611926500**
Product wetted parts				
Service kit, EPDM	**9611926755**	**9611926756**	**9611926757**	**9611926758**
Service kit, HNBR	**9611926759**	**9611926760**	**9611926761**	**9611926762**
Service kit, FPM	**9611926763**	**9611926764**	**9611926765**	**9611926766**

Recommended spare parts: Service kits

Parts marked with □ are included in the service kits (actuator).
Parts marked with • are included in the service kits (product wetted parts).

TD 900489/1

If the actuator is marked with a danger warning do NOT attempt to cut the actuator open.



Do NOT attempt to disassemble the actuator due to spring under load danger!



Do NOT attempt to cut the actuator open, due to spring under load danger!

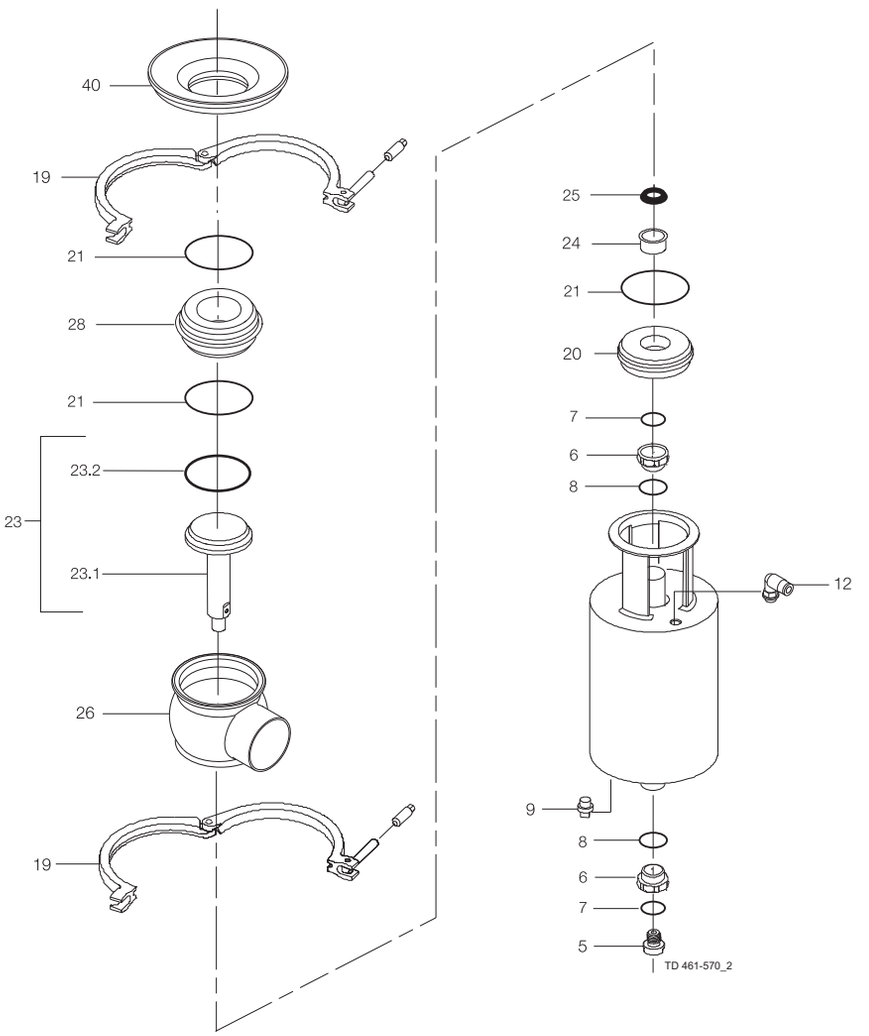

Pos		Qty	Denomination	DN 50 51 mm	DN 65 63.5 mm	DN 80 76.1 mm	DN 100 101.6 mm
Actuator							
			Actuator, complete (NO)	9613154802	9613154803	9613154804	9613154805
			Actuator, complete (NC)	9613154807	9613154808	9613154809	9613154810
			Actuator, complete (A/A)	9613154812	9613154813	9613154814	9613154815
5		1	Adapter, plastic (- 0115)				
		1	Adapter, steel (0115 - 0518)				
		1	Adapter, steel (0518 -)	9615374701	9615374701	9615374701	9615374701
6	□	2	Bushing				
7	□	2	O-ring				
8	□	2	O-ring				
9		1	Plug	9613414101	9613414101	9613414101	9613414101
12		1(2)	Air fitting	9611991988	9611991988	9611991988	9611991988
Clamp							
19		2	Clamp	9612939304	9612939305	9612939306	9612939307
Bonnet							
20		1	Bonnet	9613127103	9613127104	9613127105	9613127106
21	♦	3	O-ring, EPDM (standard)				
		3	O-ring, HNBR				
		3	O-ring, FPM				
			O-ring set (10 pcs.) EPDM	9614059425	9614059428	9614059431	9614059434
			O-ring set (10 pcs.) HNBR	9614059426	9614059429	9614059432	9614059435
			O-ring set (10 pcs.) FPM	9614059427	9614059430	9614059433	9614059436
24		1	Bushing	9613125002	9613125002	9613125002	9613125002
25	♦	1	Lip seal, EPDM (standard)				
		1	Lip seal, HNBR				
		1	Lip seal, FPM				
			Lip seal set (10 pcs.) EPDM	9614059419	9614059419	9614059419	9614059419
			Lip seal set (10 pcs.) HNBR	9614059420	9614059420	9614059420	9614059420
			Lip seal set (10 pcs.) FPM	9614059421	9614059421	9614059421	9614059421
Seat							
28		1	Seat	9613127503	9613127504	9613127505	9613127506
Valve Body							
26		1	Valve body, upper, 1 port ISO	9613139305	9613139307	9613139309	9613139311
		1	Valve body, upper, 2 ports ISO	9613139306	9613139308	9613139310	9613139312
		1	Valve body, upper, 1 port DIN	9613139405	9613139407	9613139409	9613139411
		1	Valve body, upper, 2 ports DIN	9613139406	9613139408	9613139410	9613139412
Tank flange							
40		1	Tank flange	9634069901	9634070001	9634070101	9634070201
Valve Plug							
23		1	Plug, shut-off, ISO, complete, EPDM (standard)	9613138803	9613138804	9613138805	9613138806
		1	Plug, shut-off, ISO, complete, HNBR	9613138815	9613138816	9613138817	9613138818
		1	Plug, shut-off, ISO, complete, FPM	9613138827	9613138828	9613138829	9613138830
		1	Plug, shut-off, DIN, complete, EPDM (standard)	9613138809	9613138810	9613138811	9613138812
		1	Plug, shut-off, DIN, complete, HNBR	9613138821	9613138822	9613138823	9613138824
		1	Plug, shut-off, DIN, complete, FPM	9613138833	9613138834	9613138835	9613138836
23.1		1	Plug, shut-off, ISO	9613139803	9613139804	9613139805	9613139806
		1	Plug, shut-off, DIN	9613139809	9613139810	9613139811	9613139812
23.2	♦	1	Plug seal, EPDM (standard)				
		1	Plug seal, HNBR				
		1	Plug seal, FPM				
			Plug seal set (10 pcs.) EPDM	9614059407	9614059410	9614059413	9614059416
			Plug seal set (10 pcs.) HNBR	9614059408	9614059411	9614059414	9614059417
			Plug seal set (10 pcs.) FPM	9614059409	9614059412	9614059415	9614059418

	DN 50 51 mm	DN 65 63.5 mm	DN 80 76.1 mm	DN 100 101.6 mm
Service kit for actuator				
□ **Service kit, actuator**	**9611926500**	**9611926500**	**9611926500**	**9611926500**
♦ **Service kit, EPDM**	**9611926701**	**9611926702**	**9611926703**	**9611926704**
♦ **Service kit, HNBR**	**9611926705**	**9611926706**	**9611926707**	**9611926708**
♦ **Service kit, FPM**	**9611926709**	**9611926710**	**9611926711**	**9611926712**

Parts marked with □♦ are included in the service kits.
Recommended spare parts: Service kits.

If the actuator is marked with a danger warning do NOT attempt to cut the actuator open.



Do NOT attempt to disassemble the actuator due to spring under load danger.



Do NOT attempt to cut the actuator open, due to spring under load danger.

AND



Do NOT attempt to cut the actuator open, due to spring under load danger.

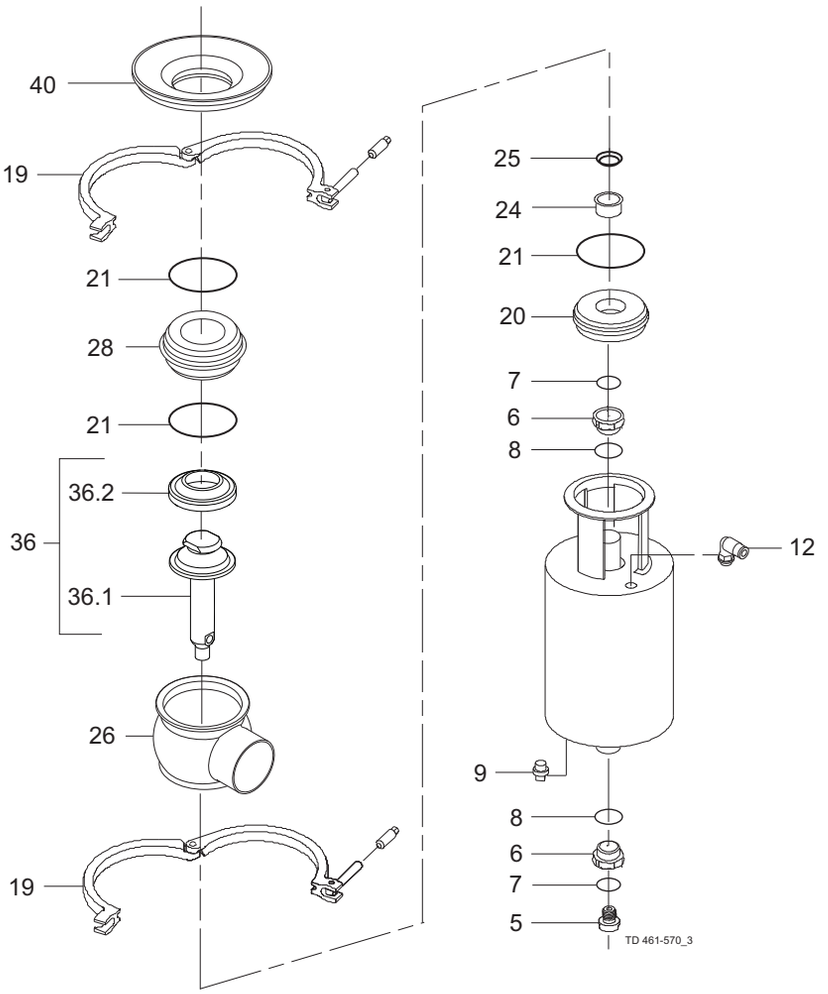

Pos	Qty	Denomination	2“	2 ½	3”	4”
		Actuator, complete (NO)	9613154832	9613154833	9613154834	9613154835
		Actuator, complete (NC)	9613163137	9613154838	9613154839	9613163140
		Actuator, complete (A/A)	9613163142	9613163143	9613163144	9613163145
5	1	Adapter, plastic (- 0115)				
	1	Adapter, steel (0115 - 0518)				
	1	Adapter, steel (0518 -)	9615374701	9615374701	9615374701	9615374701
9	1	Plug	9613414101	9613414101	9613414101	9613414101
12	1(2)	Air fitting	9611994682	9611994682	9611994682	9611994682
19	2	Clamp	9612939323	9612939324	9612939325	9612939326
Bonnet						
20	1	Bonnet	9613127103	9613127104	9613127105	9613127106
21 ♦	3	O-ring, EPDM (standard)				
	3	O-ring, HNBR				
	3	O-ring, FPM				
		O-ring, set (10 pcs.) EPDM	9614059425	9614059428	9614059431	9614059434
		O-ring, set (10 pcs.) HNBR	9614059426	9614059429	9614059432	9614059435
		O-ring, set (10 pcs.) FPM	9614059427	9614059430	9614059433	9614059436
24	1	Bushing	9613125002	9613125002	9613125002	9613125002
25 ♦	1	Lip seal, EPDM (standard)				9613120501
	1	Lip seal, HNBR				
	1	Lip seal, FPM				
		Lip seal, set (10 pcs.) EPDM	9614059419	9614059419	9614059419	9614059419
		Lip seal, set (10 pcs.)HNBR	9614059420	9614059420	9614059420	9614059420
		Lip seal, set (10 pcs.)FPM	9614059421	9614059421	9614059421	9614059421
Seat						
28	1	Seat	9613127503	9613127504	9613127505	9613127506
Valve Body						
26	1	Valve body, upper, 1 ports , clamp	9613161505	9613161507	9613161509	9613161511
	1	Valve body, upper, 2 ports , clamp	9613161506	9613161508	9613161510	9613161512
	1	Valve body, upper, 1 ports, welding ends	9613139317	9613139319	9613139321	9613139323
	1	Valve body, upper, 2 ports, welding ends	9613139318	9613139320	9613139322	9613139324
Tank flange						
40	1	Tank flange	9634069901	9634070001	9634070101	9634070201
Valve Plug						
36	1	Plug, shut off, complete	9613155803	9613155804	9613155805	9613155806
36.1	1	Plug, shut off	9613151102	9613151103	9613151104	9613151105
36.2♦	1	Plug seal, PTFE				
		Plug seal, set (10 pcs.) PTFE	9614059450	9614059451	9614059452	9614059453
			2"	**2 ½”**	**3”**	**4”**

Recommended spare parts: Service kits.

•	**Service kit, actuator**	**9611926500**	**9611926500**	**9611926500**	**9611926500**
♦	**Service kit, EPDM**	**9611926713**	**9611926714**	**9611926715**	**9611926716**
♦	**Service kit, HNBR**	**9611926717**	**9611926718**	**9611926719**	**9611926720**
♦	**Service kit, FPM**	**9611926721**	**9611926722**	**9611926723**	**9611926724**

Parts marked with ♦• are included in the service kits (actuator)

Parts marked with ♦•♦• are included in the service kits (product wetted parts)

TD 900-400/3

If the actuator is marked with a danger warning do NOT attempt to cut the actuator open.



Do NOT attempt to disassemble the actuator due to spring under load danger.



Do NOT attempt to cut the actuator open, due to spring under load danger.

AND



Do NOT attempt to cut the actuator open, due to spring under load danger.

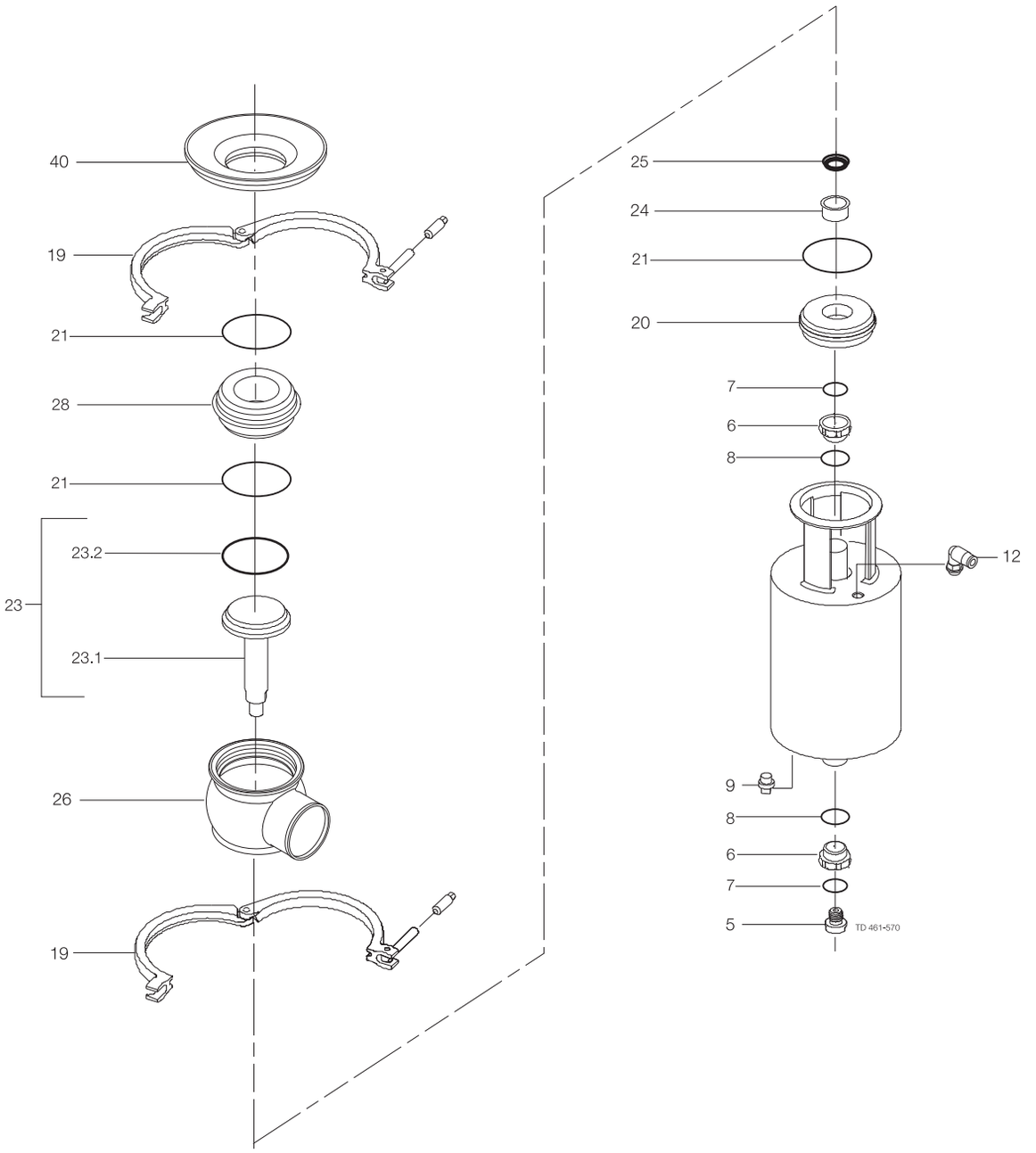

Pos		Qty	Denomination	2“	2 ½	3”	4”
			Actuator, complete (NO)	9613154832	9613154833	9613154834	9613154835
			Actuator, complete (NC)	9613163137	9613154838	9613154839	9613163140
			Actuator, complete (A/A)	9613163142	9613163143	9613163144	9613163145
5		1	Adapter, plastic (- 0115)				
		1	Adapter, steel (0115 - 0518)				
		1	Adapter, steel (0518 -)	9615374701	9615374701	9615374701	9615374701
6	●	2	Bushing				
7	●	2	O-ring				
8	●	2	O-ring				
9		1	Plug	9613414101	9613414101	9613414101	9613414101
12		1(2)	Air fitting	9611994682	9611994682	9611994682	9611994682
Clamp							
19		2	Clamp	9612939323	9612939324	9612939325	9612939326
Bonnet							
20		1	Bonnet	9613127103	9613127104	9613127105	9613127106
21	♦	3	O-ring, EPDM (stadard)				
		3	O-ring, NBR				
		3	O-ring, FPM				
			O-ring, set (10 pcs.) EPDM	9614059425	9614059428	9614059431	9614059434
			O-ring, set (10 pcs.) HNBR	9614059426	96140594289	9614059432	9614059435
			O-ring, set (10 pcs.) FPM	9614059427	9614059430	9614059433	9614059436
24		1	Bushing	9613125002	9613125002	9613125002	9613125002
25	♦	1	Lip seal, EPDM (standard)				
		1	Lip seal, NBR				
		1	Lip seal, FPM				
			Lip seal, set (10 pcs.) EPDM	9614059419	9614059419	9614059419	9614059419
			Lip seal, set (10 pcs.) HNBR	9614059420	9614059420	9614059420	9614059420
			Lip seal, set (10 pcs.) FPM	9614059421	9614059421	9614059421	9614059421
Seat							
28		1	Seal	9613127503	9613127504	9613127505	9613127506
Valve Body							
26		1	Valve body, upper, 1 ports, clamp	9613161505	9613161507	9613161509	9613161511
		1	Valve body, upper, 2 ports, clamp	9613161506	9613161508	9613161510	9613161512
		1	Valve body, upper, 1 ports, welding ends	9613139317	9613139319	9613139321	9613139323
		1	Valve body, upper, 2 ports, welding ends	9613139318	9613139320	9613139322	9613139324
Tank flange							
40		1	Tank flange	9634069901	9634069901	9634069901	9634069901
Valve plug							
23		1	Plug, shut-off, complete, EDPM (standard)	9613138803	9613138804	9613138805	9613138806
		1	Plug, shut-off, complete, HNBR	9613138815	9613138816	9613138817	9613138818
		1	Plug, shut-off, complete, FPM	9613138827	9613138828	9613138829	9613138830
23.1		1	Plug, shut-off	9613139803	9613139804	9613139805	9613139806
23.2	♦	1	Plug seal, EPDM (standard)				
		1	Plug seal, HNBR				
		1	Plug seal, FPM				
			Plug seal, set , (10 pcs.) EPDM	9614059407	9614059410	9614059413	9614059416
			Plug seal, set , (10 pcs.) HNBR	9614059408	9614059411	9614059414	9614059417
			Plug seal, set , (10 pcs.) FPM	9614059409	9614059412	9614059415	9614059418

		2"	2 ½”	3”	4”
●	**Service kit, actuator**	**9611926500**	**9611926500**	**9611926500**	**9611926500**
♦	**Service kit, EPDM**	**9611926701**	**9611926702**	**9611926703**	**9611926704**
♦	**Service kit, HNBR**	**9611926705**	**9611926706**	**9611926707**	**9611926708**
♦	**Service kit, FPM**	**9611926709**	**9611926710**	**9611926711**	**9611926712**

Parts marked with ♦● are included in the service kits (actuator)

Parts marked with ♦♦●● are included in the service kits (product wetted parts)

TD900397/2

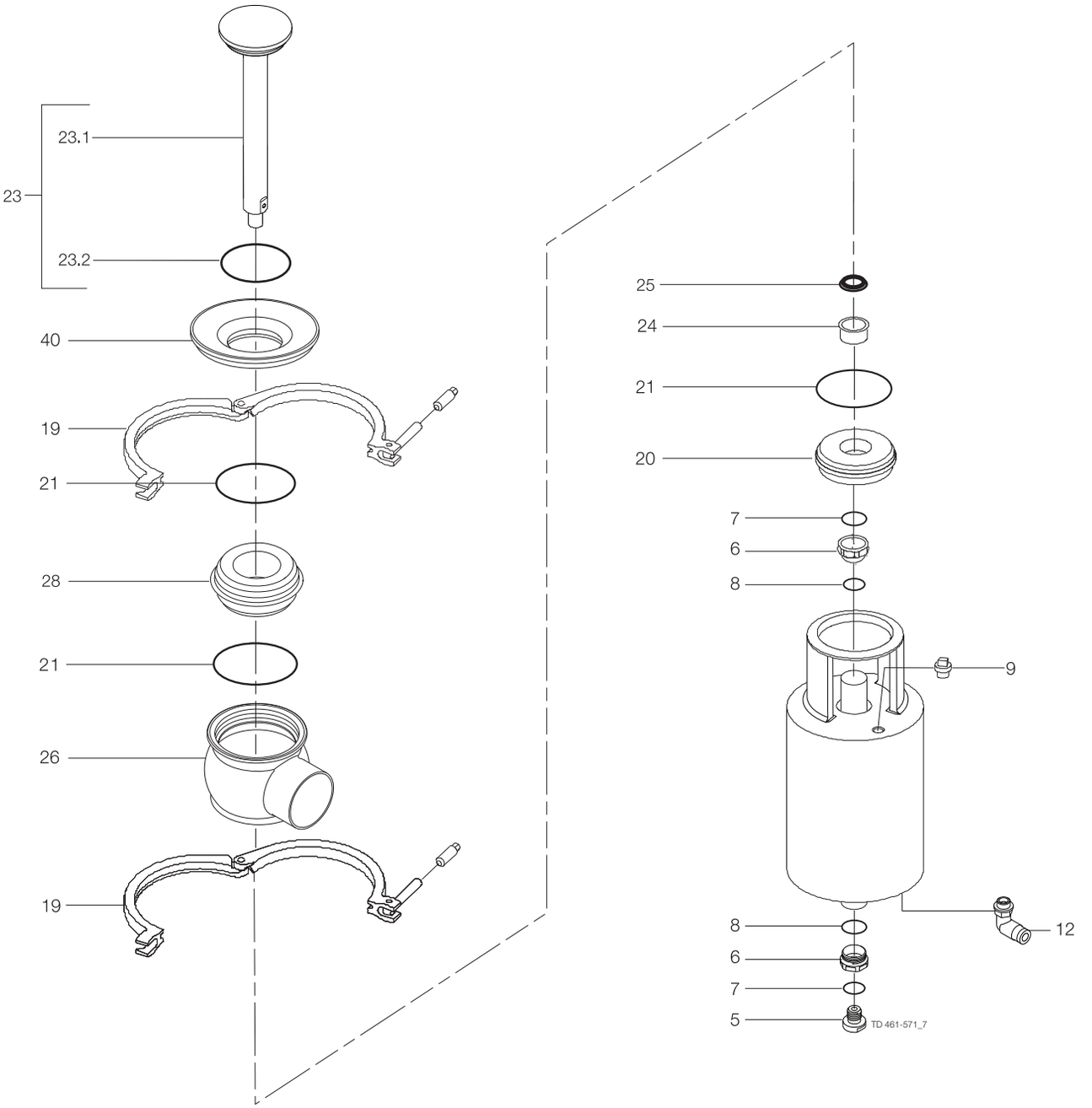
23
23.1
23.2
40
19
21
28
21
26
19
25
24
21
20
7
6
8
9
8
6
7
5
12
TD 461-571_7

Pos		Qty	Denomination	DN 50 51 mm	DN 65 63.5 mm	DN 80 76.1 mm	DN 100 101.6 mm
Actuator							
			Actuator, complete (NO-RA)	9613154807	9613154808	9613154809	9613154810
			Actuator, complete (NC-RA)	9613154802	9613154803	9613154804	9613154805
			Actuator, complete (A/A)	9613154812	9613154813	9613154814	9613154815
5		1	Adapter, plastic (- 0115)				
		1	Adapter, steel (0115 - 0518)				
		1	Adapter, steel (0518 -)	9615374701	9615374701	9615374701	9615374701
6	□	2	Bushing				
7	□	2	O-ring				
8	□	2	O-ring				
9		1	Plug	9613414101	9613414101	9613414101	9613414101
12		1(2)	Air fitting	9611991988	9611991988	9611991988	9611991988
Clamp							
19		2	Clamp	9612939304	9612939305	9612939306	9612939307
Bonnet							
20		1	Bonnet	9613127103	9613127104	9613127105	9613127106
21	♦	3	O-ring, EPDM (standard)				
		3	O-ring, HNBR				
		3	O-ring, FPM				
			O-ring set (10 pcs.) EPDM	9614059425	9614059428	9614059431	9614059434
			O-ring set (10 pcs.) HNBR	9614059426	9614059429	9614059432	9614059435
			O-ring set (10 pcs.) FPM	9614059427	9614059430	9614059433	9614059436
24		1	Bushing	9613125002	9613125002	9613125002	9613125002
25	♦	1	Lip seal, EPDM (standard)				
		1	Lip seal, HNBR				
		1	Lip seal, FPM				
			Lip seal set (10 pcs.) EPDM	9614059419	9614059419	9614059419	9614059419
			Lip seal set (10 pcs.) HNBR	9614059420	9614059420	9614059420	9614059420
			Lip seal set (10 pcs.) FPM	9614059421	9614059421	9614059421	9614059421
Seat							
28		1	Seat	9613127503	9613127504	9613127505	9613127506
Valve Body							
26		1	Valve body, upper, 1 port ISO	9613139305	9613139307	9613139309	9613139311
		1	Valve body, upper, 2 ports ISO	9613139306	9613139308	9613139310	9613139312
		1	Valve body, upper, 1 port DIN	9613139405	9613139407	9613139409	9613139411
		1	Valve body, upper, 2 ports DIN	9613139406	9613139408	9613139410	9613139412
Tank flange							
40		1	Tank flange	9634069901	9634070001	9634070101	9634070201
Valve Plug							
23		1	Plug, shut-off RA, ISO, complete, EPDM (standard)	9613127603	9613127604	9613127605	9613127606
		1	Plug, shut-off RA, ISO, complete, HNBR	9613127615	9613127616	9613127617	9613127618
		1	Plug, shut-off RA, ISO, complete, FPM	9613127627	9613127628	9613127629	9613127630
		1	Plug, shut-off RA, DIN, complete, EPDM (standard)	9613127609	9613127610	9613127611	9613127612
		1	Plug, shut-off RA, DIN, complete, HNBR	9613127621	9613127622	9613127623	9613127624
		1	Plug, shut-off RA, DIN, complete, FPM	9613127633	9613127634	9613127635	9613127636
23.1		1	Plug, shut-off RA, ISO	9613139903	9613139904	9613139905	9613139906
		1	Plug, shut-off RA, DIN	9613139909	9613139910	9613139911	9613139912
23.2	♦	1	Plug seal, EPDM (standard)				
		1	Plug seal, HNBR				
		1	Plug seal, FPM				
			Plug seal set (10 pcs.) EPDM	9614059407	9614059410	9614059413	9614059416
			Plug seal set (10 pcs.) HNBR	9614059408	9614059411	9614059414	9614059417
			Plug seal set (10 pcs.) FPM	9614059409	9614059412	9614059415	9614059418

	DN 50 51 mm	DN 65 63.5 mm	DN 80 76.1 mm	DN 100 101.6 mm
Service kit for actuator				
□ **Service kit, actuator**	**9611926500**	**9611926500**	**9611926500**	**9611926500**
♦ **Service kit, EPDM**	**9611926701**	**9611926702**	**9611926703**	**9611926704**
♦ **Service kit, HNBR**	**9611926705**	**9611926706**	**9611926707**	**9611926708**
♦ **Service kit, FPM**	**9611926709**	**9611926710**	**9611926711**	**9611926712**

Parts marked with □♦ are included in the service kits.
Recommended spare parts: Service kits.

If the actuator is marked with a danger warning do NOT attempt to cut the actuator open.



Do NOT attempt to disassemble the actuator due to spring under load danger.



Do NOT attempt to cut the actuator open, due to spring under load danger.

AND



Do NOT attempt to cut the actuator open, due to spring under load danger.

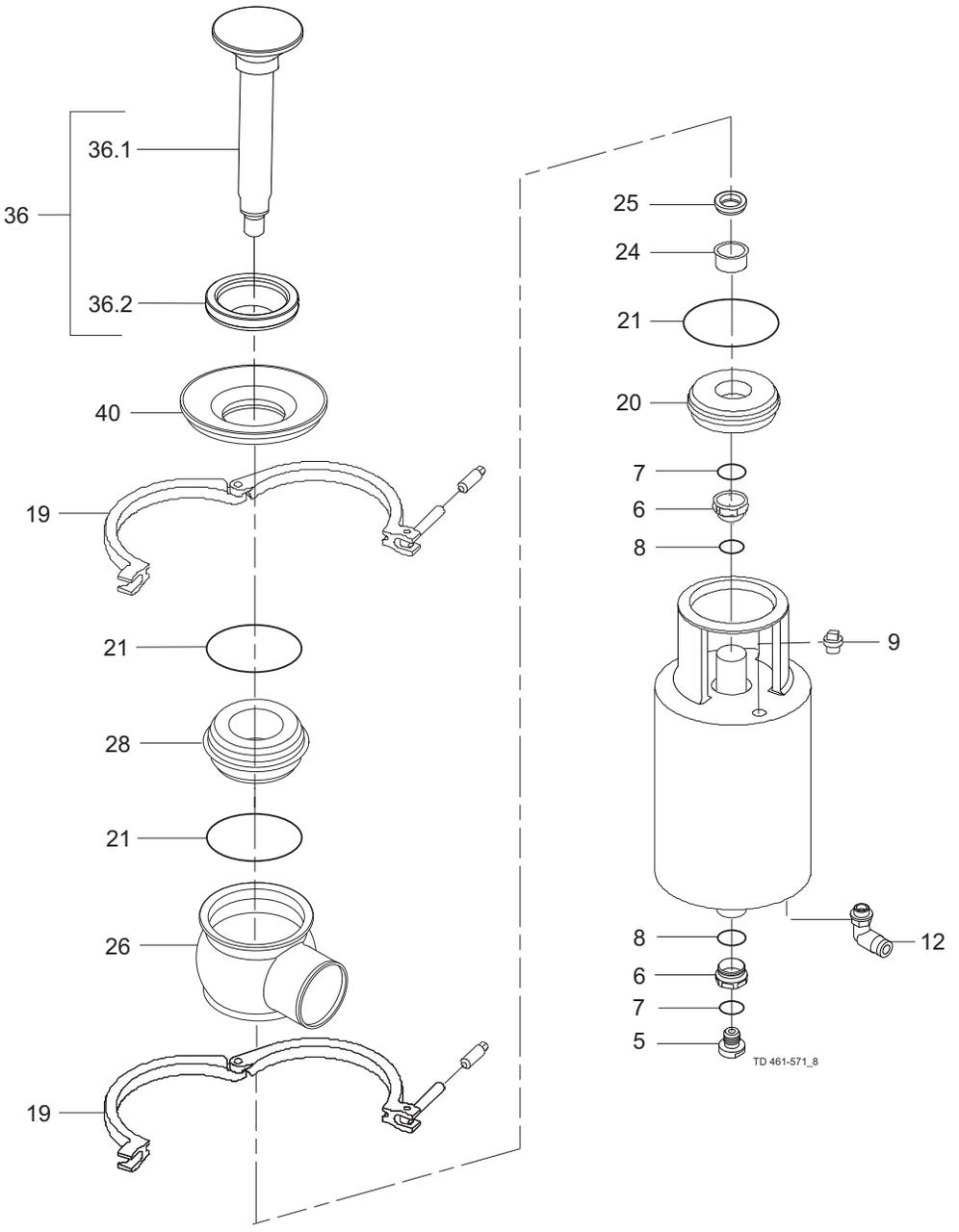

Pos		Qty	Denomination	2“	2 ½	3”	4”
			Actuator, complete (NO-RA)	9613154837	9613154838	9613154839	9613154840
			Actuator, complete (NC-RA)	9613154832	9613154833	9613154834	9613154835
			Actuator, complete (A/A)	9613154842	9613154843	9613154844	9613154845
5		1	Adapter, plastic (- 0115)				
		1	Adapter, steel (0115 - 0518)				
		1	Adapter, steel (0518 -)	9615374701	9615374701	9615374701	9615374701
6	•	2	Bushing				
7	•	2	O-ring				
8	•	2	O-ring				
9		1	Plug	9613414101	9613414101	9613414101	9613414101
12		1(2)	Air fitting	9611994682	9611994682	9611994682	9611994682
Clamp							
19		2	Clamp	9612939323	9612939324	9612939325	9612939326
Bonnet							
20		1	Bonnet	9613127103	9613127104	9613127105	9613127106
21	♦	3	O-ring, EPDM (standard)				
		3	O-ring, HNBR				
		3	O-ring, FPM				
			O-ring, set (10 pcs.) EPDM	9614059425	9614059428	9614059431	9614059434
			O-ring, set (10 pcs.) HNBR	9614059426	9614059429	9614059432	9614059435
			O-ring, set (10 pcs.) FPM	9614059427	9614059430	9614059433	9614059436
24		1	Bushing	9613125002	9613125002	9613125002	9613125002
25	♦	1	Lip seal, EPDM (standard)				
		1	Lip seal, HNBR				
		1	Lip seal, FPM				
			Lip seal, set (10 pcs.) EPDM	9614059419	9614059419	9614059419	9614059419
			Lip seal, set (10 pcs.) HNBR	9614059420	9614059420	9614059420	9614059420
			Lip seal, set (10 pcs.) FPM	9614059421	9614059421	9614059421	9614059421
Seat							
28		1	Seat	9613127503	9613127504	9613127505	9613127506
Valve Body							
26		1	Valve body, upper 1 ports, clamp	9613161505	9613161507	9613161509	9613161511
		1	Valve body, upper 2 ports, clamp	9613161506	9613161508	9613161510	9613161512
		1	Valve body, upper 1 ports, welding ends	9613139317	9613139319	9613139321	9613139323
		1	Valve body, upper 2 ports, welding ends	9613139318	9613139320	9613139322	9613139324
Tank flange							
40		1	Tank flange	9634069901	9634070001	9634070101	9634070201
Valve Plug							
36		1	Plug, shut off RA, complete	9613160803	9613160804	9613160805	9613160806
36.1		1	Plug, shut off RA,	9613160702	9613160703	9613160704	9613160705
			Plug seal, set (10 pcs.) PTFE	9614059450	9614059451	9614059452	9614059453

		2"	2 ½”	3”	4”
•	**Service kit, actuator**	**9611926500**	**9611926500**	**9611926500**	**9611926500**
♦	**Service kit, EPDM**	**9611926713**	**9611926714**	**9611926715**	**9611926716**
♦	**Service kit, HNBR**	**9611926717**	**9611926718**	**9611926719**	**9611926720**
♦	**Service kit, FPM**	**9611926721**	**9611926722**	**9611926723**	**9611926724**

Parts marked with ♦• are included in the service kits (actuator)

Parts marked with ♦•♦• are included in the service kits (product wetted parts)

TD 900-401/3

If the actuator is marked with a danger warning do NOT attempt to cut the actuator open.



Do NOT attempt to disassemble the actuator due to spring under load danger.



Do NOT attempt to cut the actuator open, due to spring under load danger.

AND



Do NOT attempt to cut the actuator open, due to spring under load danger.

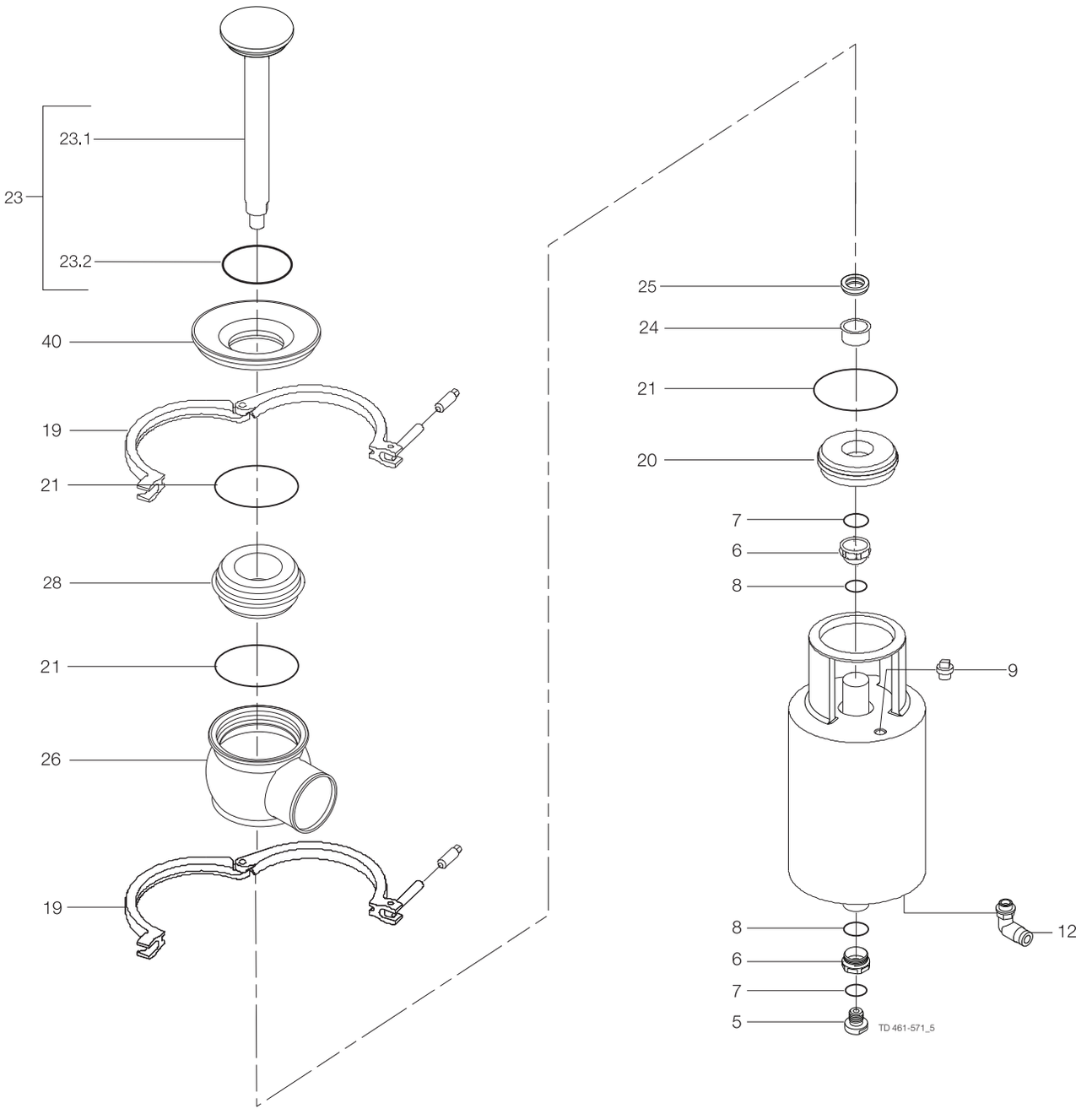

Pos		Qty	Denomination	2“	2 ½”	3”	4”
Actuator							
			Actuator, complete (NO-RA)	9613154807	9613154808	9613154809	9613154810
			Actuator, complete (NC-RA)	9613154802	9613154803	9613154804	9613154805
			Actuator, complete (A/A)	9613154812	9613154813	9613154814	9613154815
5		1	Adapter, plastic (- 0115)				
		1	Adapter, steel (0115 - 0518)				
		1	Adapter, steel (0518 -)	9615374701	9615374701	9615374701	9615374701
6	□	2	Bushing				
7	□	2	O-ring				
8	□	2	O-ring				
9		1	Plug	9613414101	9613414101	9613414101	9613414101
12		1(2)	Air fitting	9611991988	9611991988	9611991988	9611991988
Clamp							
19		2	Clamp	9612939304	9612939305	9612939306	9612939307
Bonnet							
20		1	Bonnet	9613127103	9613127104	9613127105	9613127106
21	♦	3	O-ring, EPDM (standard)				
		3	O-ring, HNBR				
		3	O-ring, FPM				
			O-ring set, (10 pcs.) EPDM	9614059425	9614059428	9614059431	9614059434
			O-ring set, (10 pcs.) HNBR	9614059426	9614059429	9614059432	9614059435
			O-ring set, (10 pcs.) FPM	9614059427	9614059430	9614059433	9614059436
24		1	Bushing	9613125002	9613125002	9613125002	9613125002
25	♦	1	Lip seal, EPDM (standard)				
		1	Lip seal, HNBR				
		1	Lip seal, FPM				
			Lip seal set, (10 pcs.) EPDM	9614059419	9614059419	9614059419	9614059419
			Lip seal set, (10 pcs.) HNBR	9614059420	9614059420	9614059420	9614059420
			Lip seal set, (10 pcs.) FPM	9614059421	9614059421	9614059421	9614059421
Seat							
28		1	Seat	9613127503	9613127504	9613127505	9613127506
Valve Body							
26		1	Valve body, upper, 1 port ISO	9613139305	9613139307	9613139309	9613139311
		1	Valve body, upper, 2 ports ISO	9613139306	9613139308	9613139310	9613139312
		1	Valve body, upper, 1 port DIN	9613139405	9613139407	9613139409	9613139411
		1	Valve body, upper, 2 ports DIN	9613139406	9613139408	9613139410	9613139412
Tank flange							
40		1	Tank flange	9634069901	9634070001	9634070101	9634070201
Valve Plug							
23		1	Plug, shut-off RA, ISO, complete, EPDM (standard)	9613127603	9613127604	9613127605	9613127606
		1	Plug, shut-off RA, ISO, complete, HNBR	9613127615	9613127616	9613127617	9613127618
		1	Plug, shut-off RA, ISO, complete, FPM	9613127627	9613127628	9613127629	9613127630
		1	Plug, shut-off RA, DIN, complete, EPDM (standard)	9613127609	9613127610	9613127611	9613127612
		1	Plug, shut-off RA, DIN, complete, HNBR	9613127621	9613127622	9613127623	9613127624
		1	Plug, shut-off RA, DIN, complete, FPM	9613127633	9613127634	9613127635	9613127636
23.1		1	Plug, shut-off RA, ISO	9613139903	9613139904	9613139905	9613139906
		1	Plug, shut-off RA, DIN	9613139909	9613139910	9613139911	9613139912
23.2	♦	1	Plug seal, EPDM (standard)				
		1	Plug seal, HNBR				
		1	Plug seal, FPM				
			Plug seal set, (10 pcs.) EPDM	9614059407	9614059410	9614059413	9614059416
			Plug seal set, (10 pcs.) HNBR	9614059408	9614059411	9614059414	9614059417
			Plug seal set, (10 pcs.) FPM	9614059409	9614059412	9614059415	9614059418

		2”	2 1/2”	3”	4”
Service kit for Elastomer and TR2					
□	Service kit	9611926500	9611926500	9611926500	9611926500
Service kit for Product wetted parts (standard)					
♦	Service kit, EPDM	9611926701	9611926702	9611926703	9611926704
♦	Service kit, HNBR	9611926705	9611926706	9611926707	9611926708
♦	Service kit, FPM	9611926709	9611926710	9611926711	9611926712
Service kit for Product wetted parts (standard)					
♦	Service kit, EPDM	9611926713	9611926714	9611926715	9611926716
♦	Service kit, HNBR	9611926717	9611926718	9611926719	9611926720
♦	Service kit, FPM	9611926721	9611926722	9611926723	9611926724

Parts marked with □♦ are included in the service kits.

Recommended spare parts: Service kits.

If the actuator is marked with a danger warning do NOT attempt to cut the actuator open.



Do NOT attempt to disassemble the actuator due to spring under load danger!



Do NOT attempt to cut the actuator open, due to spring under load danger!

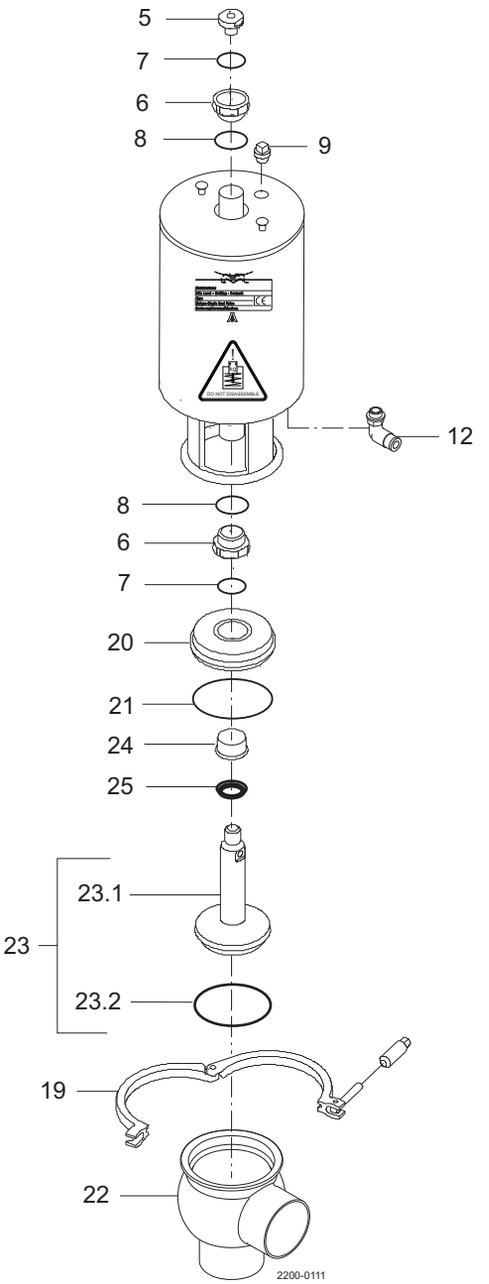

Pos		Qty	Denomination	2" 51 mm	2½" 63.5 mm	3" 76.1 mm	4" 101.6 mm
Actuator							
			Actuator, complete (NO)	9613154817	9613154818	9613154819	9613154820
			Actuator, complete (NC)	9613154822	9613154823	9613154824	9613154825
			Actuator, complete (A/A)	9613154827	9613154828	9613154829	9613154830
5		1	Adapter, plastic (- 0115)				
		1	Adapter, steel (0115 - 0518)				
		1	Adapter, steel (0518 -)	9615374701	9615374701	9615374701	9615374701
6	□	2	Bushing				
7	□	2	O-ring				
8	□	2	O-ring				
9		1	Plug	9613414101	9613414101	9613414101	9613414101
12		1(2)	Air fitting	9611991988	9611991988	9611991988	9611991988
Clamp							
19		1	Clamp	9612939304	9612939305	9612939306	9612939307
61		1	Clamp, body	212207	755345	755114	270085
Bonnet							
20		1	Bonnet	9634072001	9634072101	9634072201	9634072301
62	♦	1	Gasket, EPDM (standard)				
		1	Gasket, Buna				
		1	Gasket, FPM				
			Gasket set, 10 pcs., EPDM	9614059454	9614059455	9614059456	9614059457
			Gasket set, 10 pcs., Buna	9614059458	9614059459	9614059460	9614059461
			Gasket set, 10 pcs., FPM	9614059462	9614059463	9614059464	9614059465
24		1	Bushing	9613125002	9613125002	9613125002	9613125002
25	♦	1	Lip seal, EPDM (standard)				
		1	Lip seal, HNBR				
		1	Lip seal, FPM				
			Lip seal set (10 pcs.) EPDM	9614059419	9614059419	9614059419	9614059419
			Lip seal set (10 pcs.) HNBR	9614059420	9614059420	9614059420	9614059420
			Lip seal set (10 pcs.) FPM	9614059421	9614059421	9614059421	9614059421
Valve Body							
22		1	Valve body	623368	620754	625854	620235
Valve Plug							
36		1	Plug, complete	9613173001	9613173002	9613173003	9613173004
36.1		1	Plug	9634075901	9634076001	9634076101	9634076201
36.2	♦	1	Plug seal, PTFE				

	2" 51 mm	2½" 63.5 mm	3" 76.1 mm	4" 101.6 mm
Service kit for Actuator				
□ **Service kit**	9611926500	9611926500	9611926500	9611926500
Service kit for Product wetted parts, standard				
♦ **Service kit, EPDM**	9611926815	9611926816	9611926817	9611926818
♦ **Service kit, HNBR/NBR**	9611926819	9611926820	9611926821	9611926822
♦ **Service kit, FPM**	9611926823	9611926824	9611926825	9611926826

Parts marked with □♦ are included in the service kits.

Recommended spare parts: Service kits.

TD-900-480/1

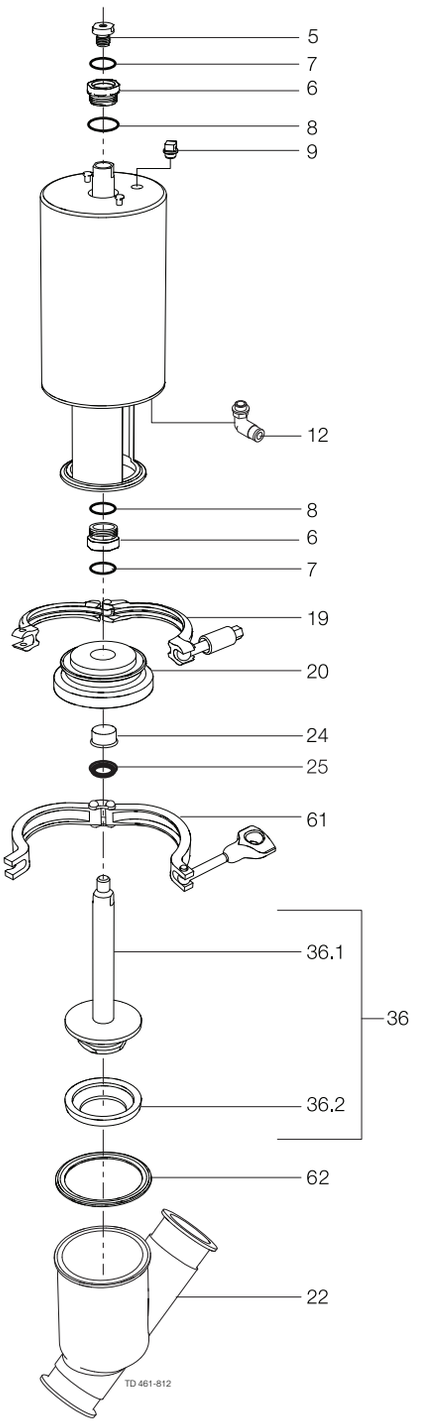
5
7
6
8
9
12
8
6
7
19
20
24
25
61
36.1
36
36.2
62
22
TD 461-812

Pos		Qty	Denomination	2”	2½”	3”	4”
			Actuator, complete (NO)	9613163147	9613163148	9613154849	9613154850
			Actuator, complete (NC)	9613154852	9613163153	9613154854	9613154855
			Actuator, complete (A/A)	9613163157	9613163158	9613163159	9613163160
5		1	Adapter, plastic (- 0115)				
		1	Adapter, steel (0115 - 0518)				
		1	Adapter, steel (0518 -)	9615374701	9615374701	9615374701	9615374701
6	□	2	Bushing				
7	□	2	O-ring				
8	□	2	O-ring				
9		1	Plug	9613414101	9613414101	9613414101	9613414101
12		1(2)	Air fitting	9611994682	9611994682	9611994682	9611994682
Clamp							
19		1	Clamp	9612939323	9612939324	9612939325	9612939326
61		1	Clamp, body	212207	755345	755114	270085
Bonnet							
20		1	Bonnet	9634072001	9634072101	9634072201	9634072301
62	♦	1	Gasket, EPDM (standard)				
		1	Gasket, Buna				
		1	Gasket, FPM				
			Gasket set, 10 pcs., EPDM	9614059454	9614059455	9614059456	9614059457
			Gasket set, 10 pcs., Buna	9614059458	9614059459	9614059460	9614059461
			Gasket set, 10 pcs., FPM	9614059462	9614059463	9614059464	9614059465
24		1	Bushing	9613125002	9613125002	9613125002	9613125002
25	♦	1	Lip seal, EPDM (standard)				
		1	Lip seal, HNBR				
		1	Lip seal, FPM				
			Lip seal, set (10 pcs.) EPDM	9614059419	9614059419	9614059419	9614059419
			Lip seal, set (10 pcs.) HNBR	9614059420	9614059420	9614059420	9614059420
			Lip seal, set (10 pcs.) FPM	9614059421	9614059421	9614059421	9614059421
Valve Body							
22		1	Valve body	623368	620754	625854	620235
Valve Plug							
36		1	Plug, complete	9613173001	9613173002	9613173003	9613173004
36.1		1	Plug	9634075901	9634076001	9634076101	9634076201
36.2	♦	1	Plug seal, PTFE				
			Plug seal, set (10 pcs.) PTFE	9614059450	9614059451	9614059452	9614059453

	2”	2½”	3”	4”
Actuator				
□ Service kit	**9611926500**	**9611926500**	**9611926500**	**9611926500**
Product wetted parts				
♦ Service kit, EPDM	**9611926815**	**9611926816**	**9611926817**	**9611926818**
♦ Service kit, HNBR/NBR	**9611926819**	**9611926820**	**9611926821**	**9611926822**
♦ Service kit, FPM	**9611926823**	**9611926824**	**9611926825**	**9611926826**

Recommended spare parts: Service kits

Parts marked with □♦ are included in the service kits.

TD900479/2

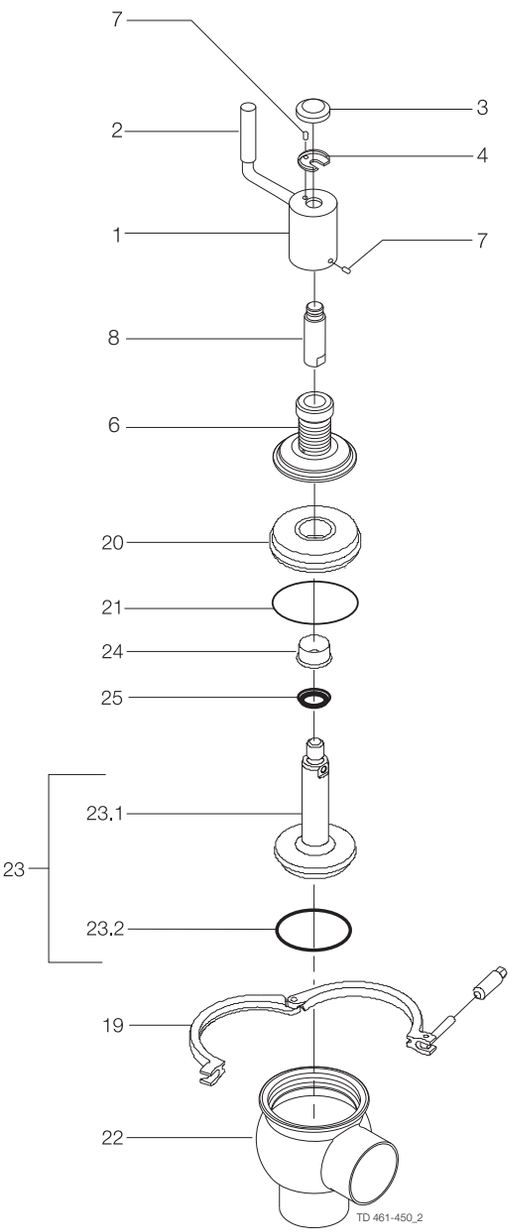
7
3
2
4
1
7
8
6
20
21
24
25
23
23.1
23.2
19
22
TD 461-450_2

Pos	Qty	Denomination	DN 25 25 mm	DN 40 38 mm	DN 50 51 mm	DN 65 63.5 mm	DN 80 76.1 mm	DN 100 101.6 mm
Actuator								
		Crank mechanism complete	9613163401	9613163401	9613163402	9613163403	9613163404	9613163405
1	1	Crank	3135304621	3135304621	3135304621	3135304621	3135304621	3135304621
2	1	Handle (included in pos. 1)	3135304951	3135304951	3135304951	3135304951	3135304951	3135304951
3	1	Cap	3135304681	3135304681	3135304681	3135304681	3135304681	3135304681
4	1	Washer	3135304671	3135304671	3135304671	3135304671	3135304671	3135304671
8	1	Stem holder	9613162401	9613162401	9613162401	9613162401	9613162401	9613162401
6	1	Guide	9613162301	9613162301	9613162302	9613162303	9613162304	9613162305
7	2	Set screw	22158192	22158192	22158192	22158192	22158192	22158192
Clamp								
19	1	Clamp	9612939303	9612939303	9612939304	9612939305	9612939306	9612939307
Bonnet								
20	1	Bonnet	9613127102	9613127102	9613127103	9613127104	9613127105	9613127106
21 □	1	O-ring, EPDM (standard)						
	1	O-ring, HNBR						
	1	O-ring, FPM						
		O-ring set (10 pcs.) EPDM	9614059422	9614059422	9614059425	9614059428	9614059431	9614059434
		O-ring set (10 pcs.) HNBR	9614059423	9614059423	9614059426	9614059429	9614059432	9614059435
		O-ring set (10 pcs.) FPM	9614059424	9614059424	9614059427	9614059430	9614059433	9614059436
24	1	Bushing	9613125002	9613125002	9613125002	9613125002	9613125002	9613125002
25 □	1	Lip seal, EPDM (standard)						
	1	Lip seal, HNBR						
	1	Lip seal, FPM						
		Lip seal set (10 pcs.) EPDM	9614059419	9614059419	9614059419	9614059419	9614059419	9614059419
		Lip seal set (10 pcs.) HNBR	9614059420	9614059420	9614059420	9614059420	9614059420	9614059420
		Lip seal set (10 pcs.) FPM	9614059421	9614059421	9614059421	9614059421	9614059421	9614059421
Valve Body								
22	1	Valve body, lower, 2 ports ISO	9613139501	9613139503	9613139505	9613139507	9613139509	9613139511
	1	Valve body, lower, 3 ports ISO	9613139502	9613139504	9613139506	9613139508	9613139510	9613139512
	1	Valve body, lower, 2 ports DIN	9613139601	9613139603	9613139605	9613139607	9613139609	9613139611
	1	Valve body, lower, 3 ports DIN	9613139602	9613139604	9613139606	9613139608	9613139610	9613139612
Valve Plug								
23	1	Plug, shut-off, ISO, complete, EPDM (standard)	9613138801	9613138802	9613138803	9613138804	9613138805	9613138806
	1	Plug, shut-off, ISO, complete, HNBR	9613138813	9613138814	9613138815	9613138816	9613138817	9613138818
	1	Plug, shut-off, ISO, complete, FPM	9613138825	9613138826	9613138827	9613138828	9613138829	9613138830
	1	Plug, shut-off, DIN, complete, EPDM (standard)	9613138807	9613138808	9613138809	9613138810	9613138811	9613138812
	1	Plug, shut-off, DIN, complete, HNBR	9613138819	9613138820	9613138821	9613138822	9613138823	9613138824
	1	Plug, shut-off, DIN, complete, FPM	9613138831	9613138832	9613138833	9613138834	9613138835	9613138836
23.1	1	Plug, shut-off, ISO	9613149601	9613139802	9613139803	9613139804	9613139805	9613139806
	1	Plug, shut-off, DIN	9613149602	9613139808	9613139809	9613139810	9613139811	9613139812
23.2□	1	Plug seal, EPDM (standard)						
	1	Plug seal, HNBR						
	1	Plug seal, FPM						
		Plug seat set (10 pcs.) EPDM	9614059401	9614059404	9614059407	9614059410	9614059413	9614059416
		Plug seal set (10 pcs.) HNBR	9614059402	9614059405	9614059408	9614059411	9614059414	9614059417
		Plug seat set (10 pcs.) FPM	9614059403	9614059406	9614059409	9614059412	9614059415	9614059418

	DN 25 25 mm	DN 40 38 mm	DN 50 51 mm	DN 65 63.5 mm	DN 80 76.1 mm	DN 100 101.6 mm
Service kit for product wetted parts, standard						
□ **Service kit, EPDM**	**9611926501**	**9611926502**	**9611926503**	**9611926504**	**9611926505**	**9611926506**
□ **Service kit, HNBR**	**9611926507**	**9611926508**	**9611926509**	**9611926510**	**9611926511**	**9611926512**
□ **Service kit, FPM**	**9611926513**	**9611926514**	**9611926515**	**9611926516**	**9611926517**	**9611926518**

Parts marked with □ are included in the service kits (product wetted parts)

Recommended spare parts: Service kits.

TD 900-383/2

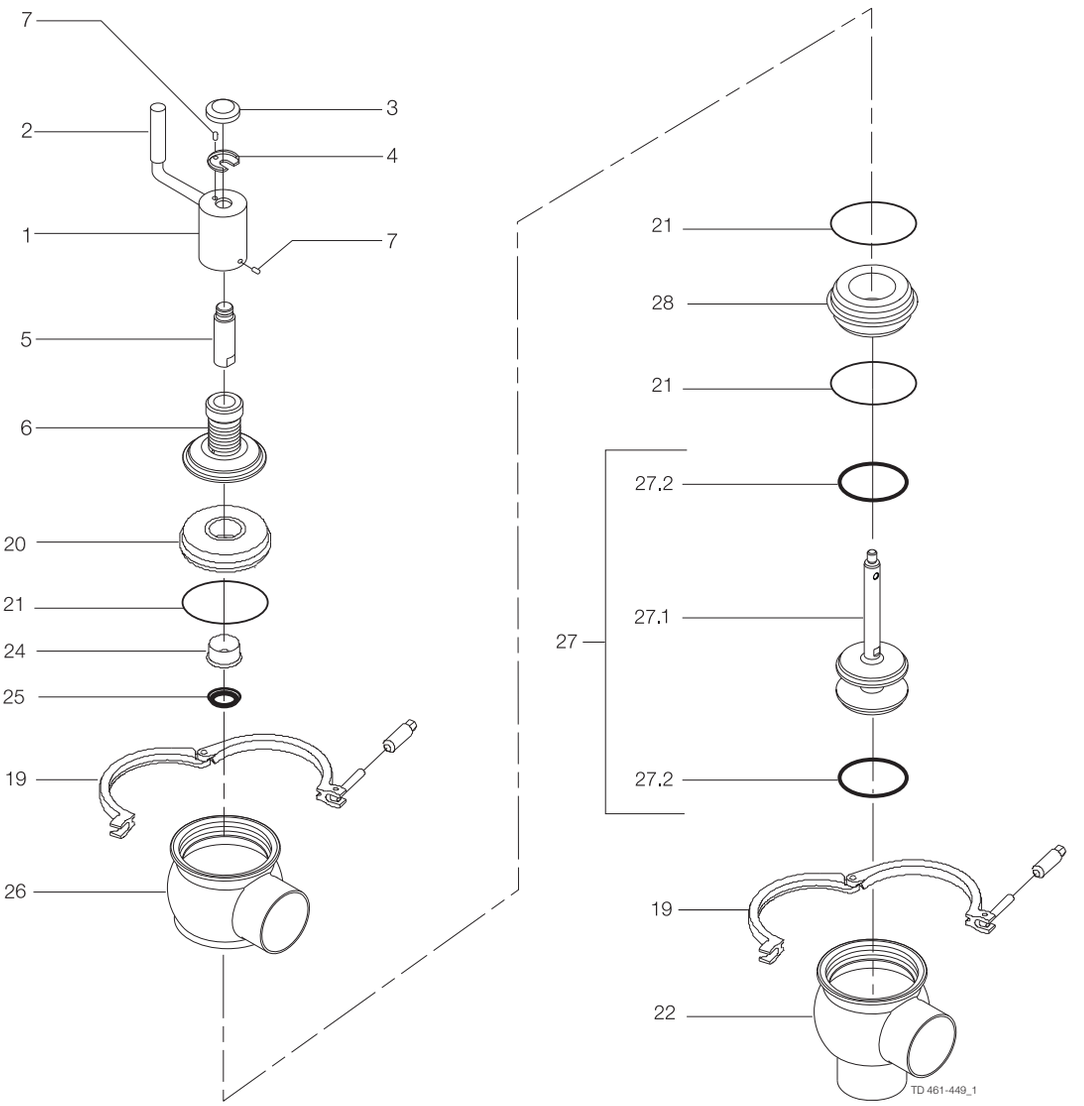
7
2
3
4
1
7
5
6
20
21
24
25
19
26
21
28
21
27.2
27
27.1
27.2
19
22
TD 461-449_1

Pos	Qty	Denomination	DN 25 25 mm	DN 40 38 mm	DN 50 51 mm	DN 65 63.5 mm	DN 80 76.1 mm	DN 100 101.6 mm
Actuator								
		Crank mechanism complete	9613163401	9613163401	9613163402	9613163403	9613163404	9613163405
1	1	Crank	3135304621	3135304621	3135304621	3135304621	3135304621	3135304621
2	1	Handle (included in pos. 1)	3135304951	3135304951	3135304951	3135304951	3135304951	3135304951
3	1	Cap	3135304681	3135304681	3135304681	3135304681	3135304681	3135304681
4	1	Washer	3135304671	3135304671	3135304671	3135304671	3135304671	3135304671
8	1	Stem holder	9613162401	9613162401	9613162401	9613162401	9613162401	9613162401
6	1	Guide	9613162301	9613162301	9613162302	9613162303	9613162304	9613162305
7	2	Set screw	22158192	22158192	22158192	22158192	22158192	22158192
Clamp								
19	2	Clamp	9612939303	9612939303	9612939304	9612939305	9612939306	9612939307
Bonnet								
20	1	Bonnet	9613127102	9613127102	9613127103	9613127104	9613127105	9613127106
21 □	3	O-ring, EPDM (standard)						
	3	O-ring, HNBR						
	3	O-ring, FPM						
		O-ring set (10 pcs.) EPDM	9614059422	9614059422	9614059425	9614059428	9614059431	9614059434
		O-ring set (10 pcs.) HNBR	9614059423	9614059423	9614059426	9614059429	9614059432	9614059435
		O-ring set (10 pcs.) FPM	9614059424	9614059424	9614059427	9614059430	9614059433	9614059436
24	1	Bushing	9613125002	9613125002	9613125002	9613125002	9613125002	9613125002
25 □	1	Lip seal, EPDM (standard)						
	1	Lip seal, HNBR						
	1	Lip seal, FPM						
		Lip seal set (10 pcs.) EPDM	9614059419	9614059419	9614059419	9614059419	9614059419	9614059419
		Lip seal set (10 pcs.) HNBR	9614059420	9614059420	9614059420	9614059420	9614059420	9614059420
		Lip seal set (10 pcs.) FPM	9614059421	9614059421	9614059421	9614059421	9614059421	9614059421
Seat								
28	1	Seat	9613127501	9613127502	9613127503	9613127504	9613127505	9613127506
Valve Body								
26	1	Valve body, upper, 1 port ISO	9613139301	9613139303	9613139305	9613139307	9613139309	9613139311
	1	Valve body, upper, 2 ports ISO	9613139302	9613139304	9613139306	9613139308	9613139310	9613139312
	1	Valve body, upper, 1 port DIN	9613139401	9613139403	9613139405	9613139407	9613139409	9613139411
	1	Valve body, upper, 2 ports DIN	9613139402	9613139404	9613139406	9613139408	9613139410	9613139412
22	1	Valve body, lower, 2 ports ISO	9613139501	9613139503	9613139505	9613139507	9613139509	9613139511
	1	Valve body, lower, 3 ports ISO	9613139502	9613139504	9613139506	9613139508	9613139510	9613139512
	1	Valve body, lower, 2 ports DIN	9613139601	9613139603	9613139605	9613139607	9613139609	9613139611
	1	Valve body, lower, 3 ports DIN	9613139602	9613139604	9613139606	9613139608	9613139610	9613139612
Valve Plug								
27	1	Plug, change-over, ISO complete, EPDM (standard)	9613127701	9613127702	9613127703	9613127704	9613127705	9613127706
	1	Plug, change-over, ISO complete, HNBR	9613127713	9613127714	9613127715	9613127716	9613127717	9613127718
	1	Plug, change-over, ISO complete, FPM	9613127725	9613127726	9613127727	9613127728	9613127729	9613127730
	1	Plug, change-over, DIN complete, EPDM (standard)	9613127707	9613127708	9613127709	9613127710	9613127711	9613127712
	1	Plug, change-over, DIN complete, HNBR	9613127719	9613127720	9613127721	9613127722	9613127723	9613127724
	1	Plug, change-over, DIN complete, FPM	9613127731	9613127732	9613127733	9613127734	9613127735	9613127736
27.1	1	Plug, change-over, ISO	9613149701	9613140002	9613140003	9613140004	9613140005	9613140006
	1	Plug, change-over, DIN	9613149702	9613140008	9613140009	9613140010	9613140011	9613140012
27.2□	2	Plug seal, EPDM (standard)						
	2	Plug seal, HNBR						
	2	Plug seal, FPM						
		Plug seal set (10 pcs.) EPDM	9614059401	9614059404	9614059407	9614059410	9614059413	9614059416
		Plug seal set (10 pcs.) HNBR	9614059402	9614059405	9614059408	9614059411	9614059414	9614059417
		Plug seal set (10 pcs.) FPM	9614059403	9614059406	9614059409	9614059412	9614059415	9614059418

		DN 25 25 mm	DN 40 38 mm	DN 50 51 mm	DN 65 63.5 mm	DN 80 76.1 mm	DN 100 101.6 mm
Service kit for product wetted parts, standard							
□	**Service kit, EPDM**	**9611926579**	**9611926580**	**9611926581**	**9611926582**	**9611926583**	**9611926584**
□	**Service kit, HNBR**	**9611926585**	**9611926586**	**9611926587**	**9611926588**	**9611926589**	**9611926590**
□	**Service kit, FPM**	**9611926591**	**9611926592**	**9611926593**	**9611926594**	**9611926595**	**9611926596**

Parts marked with □ are included in the service kits (product wetted parts)

Recommended spare parts: Service kits.

TD 900-383/2

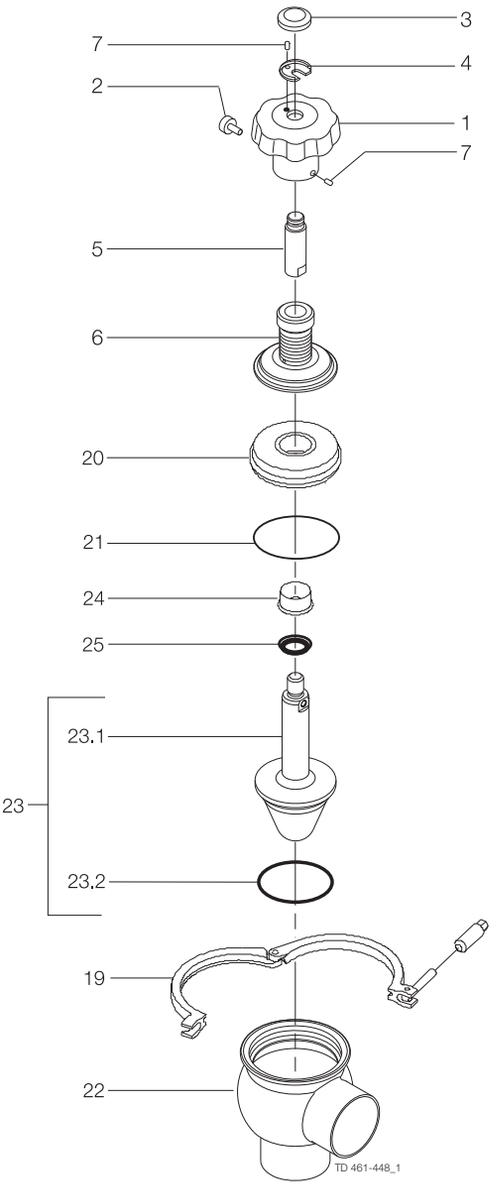
3
7
4
2
1
7
5
6
20
21
24
25
23.1
23
23.2
19
22
TD 461-448_1

Pos	Qty	Denomination	DN 40 38 mm	DN 50 51 mm	DN 65 63.5 mm	DN 80 76.1 mm	DN 100 101.6 mm
Actuator							
		Operating mechanism complete	9613163501	9613163502	9613163503	9613163504	9613163505
9	1	Hand wheel	3135305281	3135305281	3135305281	3135305281	3135305281
10	1	Lock screw	3135305291	3135305291	3135305291	3135305291	3135305291
3	1	Cap	3135304681	3135304681	3135304681	3135304681	3135304681
4	1	Washer	3135304671	3135304671	3135304671	3135304671	3135304671
8	1	Stem holder	9613162401	9613162401	9613162401	9613162401	9613162401
6	1	Guide	9613162301	9613162302	9613162303	9613162304	9613162305
7	2	Set screw	22158192	22158192	22158192	22158192	22158192
Clamp							
19	1	Clamp	9612939303	9612939304	9612939305	9612939306	9612939307
Bonnet							
20	1	Bonnet	9613127102	9613127103	9613127104	9613127105	9613127106
21 □	1	O-ring, EPDM (standard)					
	1	O-ring, HNBR					
	1	O-ring, FPM					
		O-ring set (10 pcs.) EPDM	9614059422	9614059425	9614059428	9614059431	9614059434
		O-ring set (10 pcs.) HNBR	9614059423	9614059426	9614059429	9614059432	9614059435
		O-ring set (10 pcs.) FPM	9614059424	9614059427	9614059430	9614059433	9614059436
24 □	1	Bushing	9613125002	9613125002	9613125002	9613125002	9613125002
25 □	1	Lip seal, EPDM (standard)					
	1	Lip seal, HNBR					
	1	Lip seal, FPM					
		Lip seal set (10 pcs.) EPDM	9614059419	9614059419	9614059419	9614059419	9614059419
		Lip seal set (10 pcs.) HNBR	9614059420	9614059420	9614059420	9614059420	9614059420
		Lip seal set (10 pcs.) FPM	9614059421	9614059421	9614059421	9614059421	9614059421
Valve Body							
22	1	Valve body, lower, 2 ports ISO	9613139503	9613139505	9613139507	9613139509	9613139511
	1	Valve body, lower, 3 ports ISO	9613139504	9613139506	9613139508	9613139510	9613139512
	1	Valve body, lower, 2 ports DIN	9613139603	9613139605	9613139607	9613139609	9613139611
	1	Valve body, lower, 3 ports DIN	9613139604	9613139606	9613139608	9613139610	9613139612
Valve Plug							
23	1	Plug, regulating, ISO, complete, EPDM (standard)	9613158902	9613158903	9613158904	9613158905	9613158906
	1	Plug, regulating, ISO, complete, HNBR	9613158914	9613158915	9613158916	9613158917	9613158918
	1	Plug, regulating, ISO, complete, FPM	9613158926	9613158927	9613158928	9613158929	9613158930
	1	Plug, regulating, DIN, complete, EPDM (standard)	9613158908	9613158909	9613158910	9613158911	9613158912
	1	Plug, regulating, DIN, complete, HNBR	9613158920	9613158921	9613158922	9613158923	9613158924
	1	Plug, regulating, DIN, complete, FPM	9613158932	9613158933	9613158934	9613158935	9613158936
	1	Plug, regulating, ISO, complete, EPDM (standard) kv14-option	9613158901				
	1	Plug, regulating, ISO, complete, HNBR, kv14-option	9613158913				
	1	Plug, regulating, ISO, complete, FPM, kv 14-option	9613158925				
	1	Plug, regulating, DIN, complete, EPDM (standard) kv14-option	9613158907				
	1	Plug, regulating, DIN, complete, HNBR, kv14-option	9613158919				
	1	Plug, regulating, DIN, complete, FPM, kv14-option	9613158931				
23.1	1	Plug, regulating, ISO	9613158802	9613158803	9613158804	9613158805	9613158806
	1	Plug, regulating, DIN	9613158808	9613158809	9613158810	9613158811	9613158812
	1	Plug, regulating, ISO, kv 14-option	9613158801				
	1	Plug, regulating, DIN, kv14-option	9613158807				
23.2□	1	Plug seal, EPDM (standard)					
	1	Plug seal, HNBR					
	1	Plug seal, FPM					
		Plug seal set (10 pcs.) EPDM	9614059404	9614059407	9614059410	9614059413	9614059416
		Plug seal set (10 pcs.) HNBR	9614059405	9614059408	9614059411	9614059414	9614059417
		Plug seal set (10 pcs.) FPM	9614059406	9614059409	9614059412	9614059415	9614059418

		DN 40 38 mm	DN 50 51 mm	DN 65 63.5 mm	DN 80 76.1 mm	DN 100 101.6 mm
Service kits for Product wetted parts, standard						
□	**Service kit, EPDM**	**9611926502**	**9611926503**	**9611926504**	**9611926505**	**9611926506**
□	**Service kit, HNBR**	**9611926508**	**9611926509**	**9611926510**	**9611926511**	**9611926512**
□	**Service kit, FPM**	**9611926514**	**9611926515**	**9611926516**	**9611926517**	**9611926518**

Parts marked with □ are included in the service kits (product wetted parts)

Recommended spare parts: Service kits.

TD 900-358/2

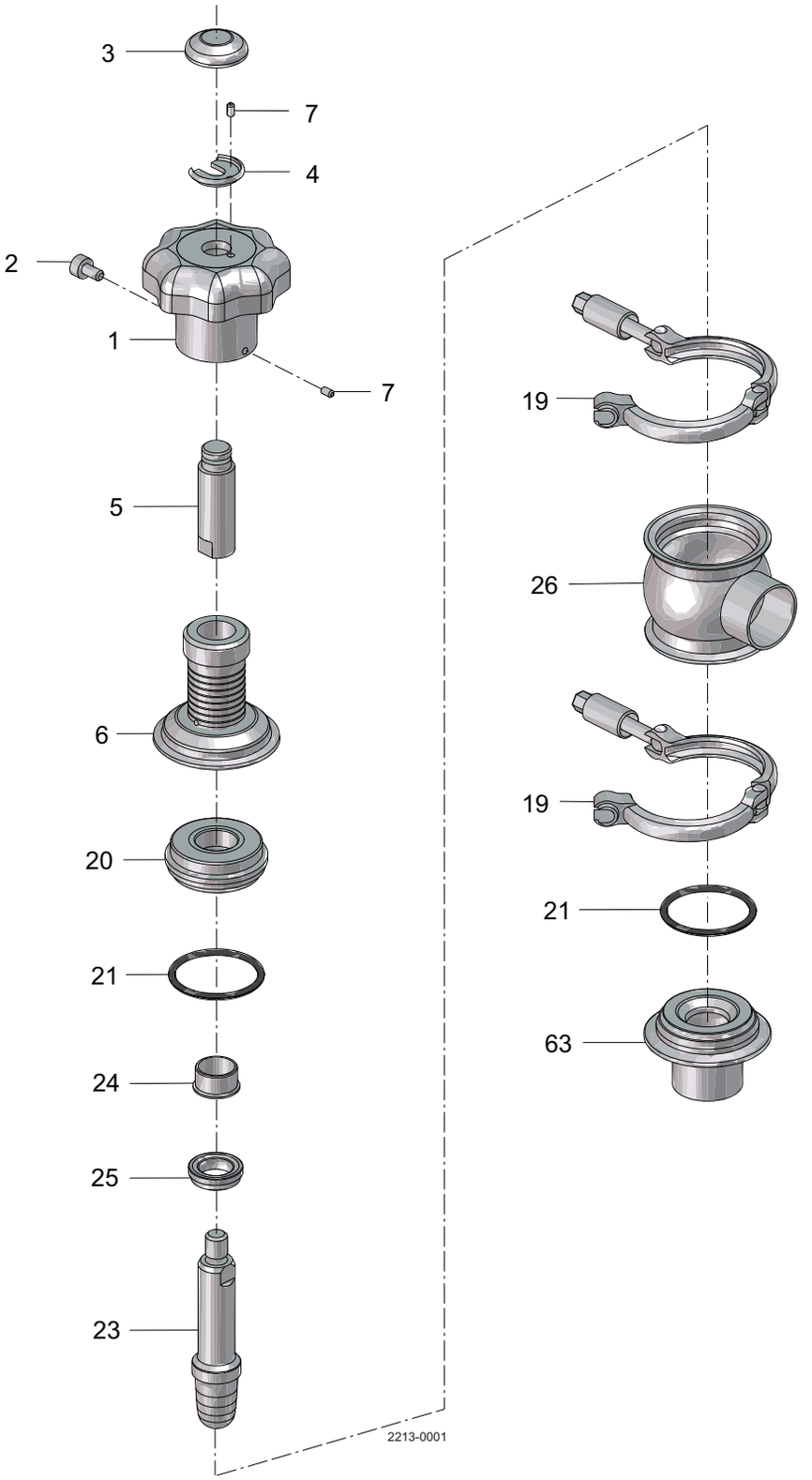
3
7
4
2
1
7
5
6
20
21
24
25
23
19
26
19
21
63
2213-0001

Pos		Qty	Denomination	38 mm
			Operating mechanism, complete	9613163501
1		1	Handwheel	3135305281
2		1	Lock screw	3135305291
3		1	Cap	3135304681
4		1	Washer	3135304671
5		1	Stem holder	9613162401
6		1	Guide	9613162301
7		2	Set screw	22158192
Clamp				
19		2	Clamp	9612939303
Bonnet				
20		1	Bonnet	9613127102
21	♦	2	O-ring, EPDM	
	♦	2	O-ring, HNBR	
	♦	2	O-ring, FPM	
			O-ring, set (10 pcs.) EPDM	9614059422
			O-ring, set (10 pcs.) HNBR	9614059423
			O-ring, set (10 pcs.) FPM	9614059424
24	♦	1	Bushing	9613125002
25	♦	1	Lip seal, EPDM	
	♦	1	Lip seal, HNBR	
	♦	1	Lip seal, FPM	
			Lip seal, set (10 pcs.) EPDM	9614059419
			Lip seal, set (10 pcs.) HNBR	9614059420
			Lip seal, set (10 pcs.) FPM	9614059421
Valve Body				
26		1	Valve body, 1 port, ISO	9613139303
63		1	Seat element, welding ends	9614289201
Valve Plug				
23		1	Plug	9614289101

Recommended spare parts: service kits.

Service kits

	38 mm
Service kit, EPDM	**9611926964**
Service kit, HNBR	**9611926965**
Service kit, FPM	**9611926966**

Parts marked with ♦ are included in the service kits (product wetted parts)
Tool for bushing (pos. no. 24) 9613160901

TD900-673/2

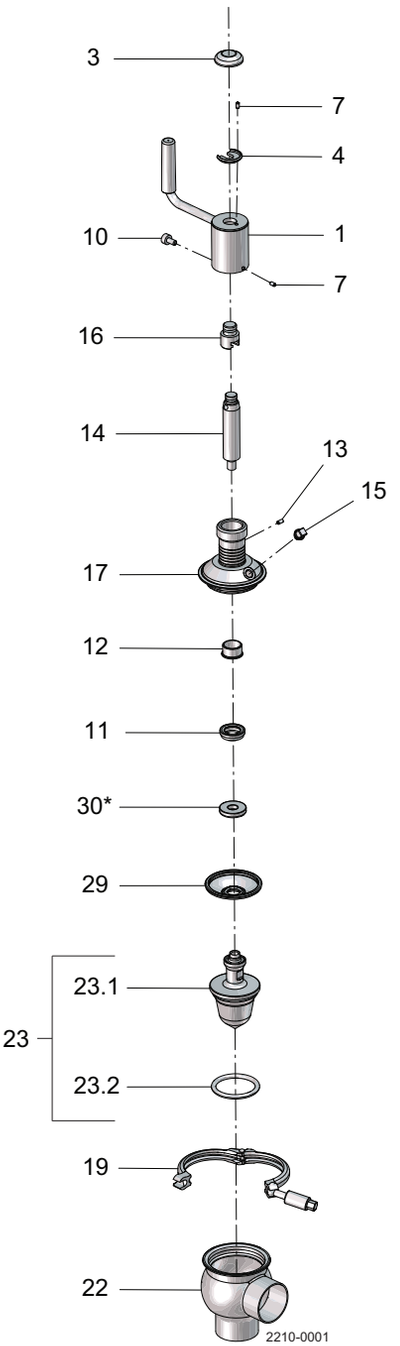

* = Disc not used on DN40/38 mm

Pos	Qty	Denomination	DN40 38 mm	DN50 51 mm	DN65 63.5 mm	DN80 76.1 mm	DN100 101.6 mm
Actuator							
		Crank mechanism complete	9613182001	9613182002	9613182003	9613182004	9613182005
1	1	Crank	3135304621	3135304621	3135304621	3135304621	3135304621
3	1	Cap	3135304681	3135304681	3135304681	3135304681	3135304681
4	1	Washer	3135304671	3135304671	3135304671	3135304671	3135304671
7	2	Set screw	22158192	22158192	22158192	22158192	22158192
10	1	Lock screw	3135305291	3135305291	3135305291	3135305291	3135305291
11	1	Lip seal, HNBR	9613120502	9613120502	9613120502	9613120502	9613120502
12	1	Bushing	9613125002	9613125002	9613125002	9613125002	9613125002
13	1	Spring pin	9611992969	9611992969	9611992969	9611992969	9611992969
14	1	Upper spindle	9613121901	9613181801	9613181801	9613181801	9613181801
15	1	Plug	9613414101	9613414101	9613414101	9613414101	9613414101
16	1	Stem extension	9613121801	9613121801	9613121801	9613121801	9613121801
17	1	Sealing element	9613181301	9613181401	9613181501	9613181601	9613181701
Clamp							
19	1	Clamp	9612939303	9612939304	9612939305	9612939306	9612939307
29 ♦	1	Diaphragm					
		Diaphragm set, (10 pcs.)	9614059437	9614059438	9614059439	9614059440	9614059441
30	1	Disc for diaphragm		9613144101	9613144201	9613144301	9613144301
Valve body (lower)							
22	1	Valve body, 2 ports, ISO	9613139503	9613139505	9613139507	9613139509	9613139511
	1	Valve body, 3 ports, ISO	9613139504	9613139506	9613139508	9613139510	9613139512
	1	Valve body, 2 ports, DIN	9613139603	9613139605	9613139607	9613139609	9613139611
	1	Valve body, 3 ports, DIN	9613139604	9613139606	9613139608	9613139610	9613139612
Valve plug (regulating)							
23	1	Plug, complete, ISO, EPDM (standard)	9613122001	9613122002	9613122003	9613122004	9613122005
	1	Plug, complete, ISO, HNBR	9613122011	9613122012	9613122013	9613122014	9613122015
	1	Plug, complete, ISO, FPM	9613122021	9613122022	9613122023	9613122024	9613122025
	1	Plug, regulating, complete, DIN, EPDM (standard)	9613122006	9613122007	9613122008	9613122009	9613122010
	1	Plug, regulating,complete, DIN, HNBR	9613122016	9613122017	9613122018	9613122019	9613122020
	1	Plug, complete, DIN, FPM	9613122026	9613122027	9613122028	9613122029	9613122030
23.1	1	Plug, ISO	9613125501	9613121301	9613121302	9613121303	9613121304
	1	Plug, DIN	9613125502	9613121305	9613121306	9613121307	9613121308
23.2♦	1	Plug seal, EPDM (standard)					
♦	1	Plug seal, HNBR					
♦	1	Plug seal, FPM					
		Plug seal set, 10 pcs., EPDM	9614059404	9614059407	9614059410	9614059413	9614059416
		Plug seal set, 10 pcs., HNBR	9614059405	9614059408	9614059411	9614059414	9614059417
		Plug seal set, 10 pcs., FPM	9614059406	9614059409	9614059412	9614059415	9614059418

Recommended spare parts: service kits

Service kits

		DN40 38 mm	DN50 51 mm	DN65 63.5 mm	DN80 76.1 mm	DN100 101.6 mm
♦	**Service kit, EPDM**	**9611926544**	**9611926545**	**9611926546**	**9611926547**	**9611926548**
♦	**Service kit, HNBR**	**9611926550**	**9611926551**	**9611926552**	**9611926553**	**9611926554**
♦	**Service kit, FPM**	**9611926556**	**9611926557**	**9611926558**	**9611926559**	**9611926560**

Parts marked with ♦ are included in the service kits (product wetted parts)
Tool for bushing (pos. 12) 9613160901

TD900-656

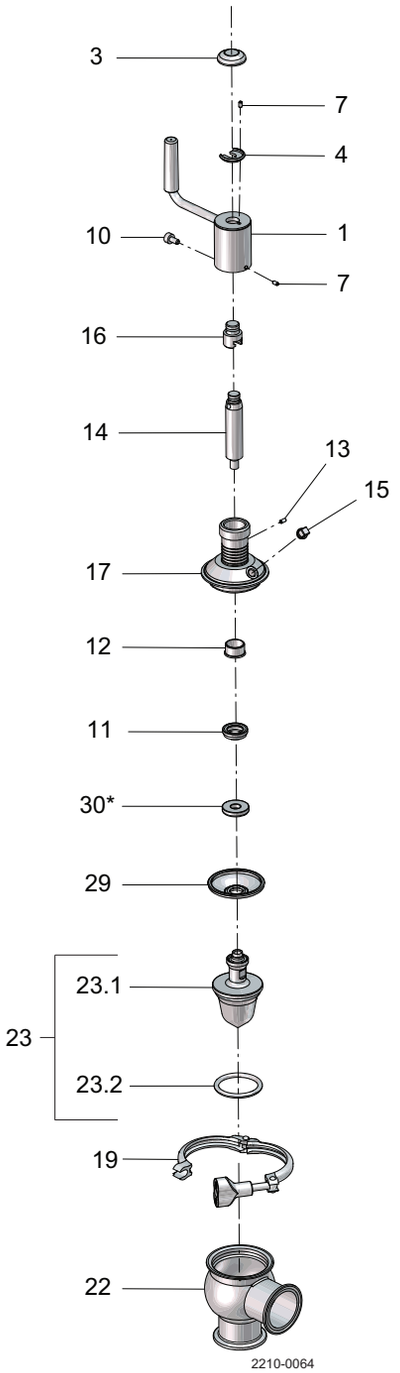
3
7
4
10
1
7
16
14
13
15
17
12
11
30*
29
23
23.1
23.2
19
22
2210-0064

Pos	Qty	Denomination	1½"	2"	2½"	3"	4"
Actuator							
		Crank mechanism complete	9613182001	9613182002	9613182003	9613182004	9613182005
1	1	Crank	3135304621	3135304621	3135304621	3135304621	3135304621
3	1	Cap	3135304681	3135304681	3135304681	3135304681	3135304681
4	1	Washer	3135304671	3135304671	3135304671	3135304671	3135304671
7	2	Set screw	22158192	22158192	22158192	22158192	22158192
10	1	Lock screw	3135305291	3135305291	3135305291	3135305291	3135305291
11	1	Lip seal, HNBR	9613120502	9613120502	9613120502	9613120502	9613120502
12	1	Bushing	9613125002	9613125002	9613125002	9613125002	9613125002
13	1	Spring pin	9611992969	9611992969	9611992969	9611992969	9611992969
14	1	Upper spindle	9613121901	9613181801	9613181801	9613181801	9613181801
15	1	Plug	96134141-01	96134141-01	96134141-01	96134141-01	96134141-01
16	1	Stem extension	9613121801	9613121801	9613121801	9613121801	9613121801
17	1	Sealing element	9613181302	9613181402	9613181502	9613181602	9613181702
Clamp							
19	1	Clamp	9612939316	9612939317	9612939318	9612939319	9612939320
29 ♦	1	Diaphragm					
		Diaphragm set, (10 pcs.)	9614059437	9614059438	9614059439	9614059440	9614059441
30	1	Disc for diaphragm	9613144001	9613144101	9613144201	9613144301	9613144301
Valve body (lower)							
22	1	Valve body, 2 ports, clamp	9613161603	9613161605	9613161607	9613161609	9613161611
	1	Valve body, 3 ports, clamp	9613161604	9613161606	9613161608	9613161610	9613161612
	1	Valve body, 2 ports, welding ends	9613139515	9613139517	9613139519	9613139521	9613139523
	1	Valve body, 3 ports, welding ends	9613139516	9613139518	9613139520	9613139522	9613139524
Valve Plug (regulating)							
23	1	Plug, complete, EPDM (standard)	9613122001	9613122002	9613122003	9613122004	9613122005
	1	Plug, complete, HNBR	9613122006	9613122007	9613122008	9613122009	9613122010
	1	Plug, complete, FPM	9613122011	9613122012	9613122013	9613122014	9613122015
23.1	1	Plug	9613125501	9613121301	9613121302	9613121303	9613121304
23.2♦	1	Plug seal, EPDM (standard)					
♦	1	Plug seal, HNBR					
♦	1	Plug seal, FPM					
		Plug seal set, (10 pcs.) EPDM	9614059404	9614059407	9614059410	9614059413	9614059416
		Plug seal set, (10 pcs.) HNBR	9614059405	9614059408	9614059411	9614059414	9614059417
		Plug seal set, (10 pcs.) FPM	9614059406	9614059409	9614059412	9614059415	9614059418

Recommended spare parts: Service kits

Service Kits

	1½"	2"	2½"	3"	4"
Service kit, EPDM	**9611926544**	**9611926545**	**9611926546**	**9611926547**	**9611926548**
Service kit, HNBR	**9611926550**	**9611926551**	**9611926552**	**9611926553**	**9611926554**
Service kit, FPM	**9611926556**	**9611926557**	**9611926558**	**9611926559**	**9611926560**

Parts marked with ♦ are included in the service kits (product wetted parts)
Tool for bushing (pos. 12) 96131609-01

TD900-659

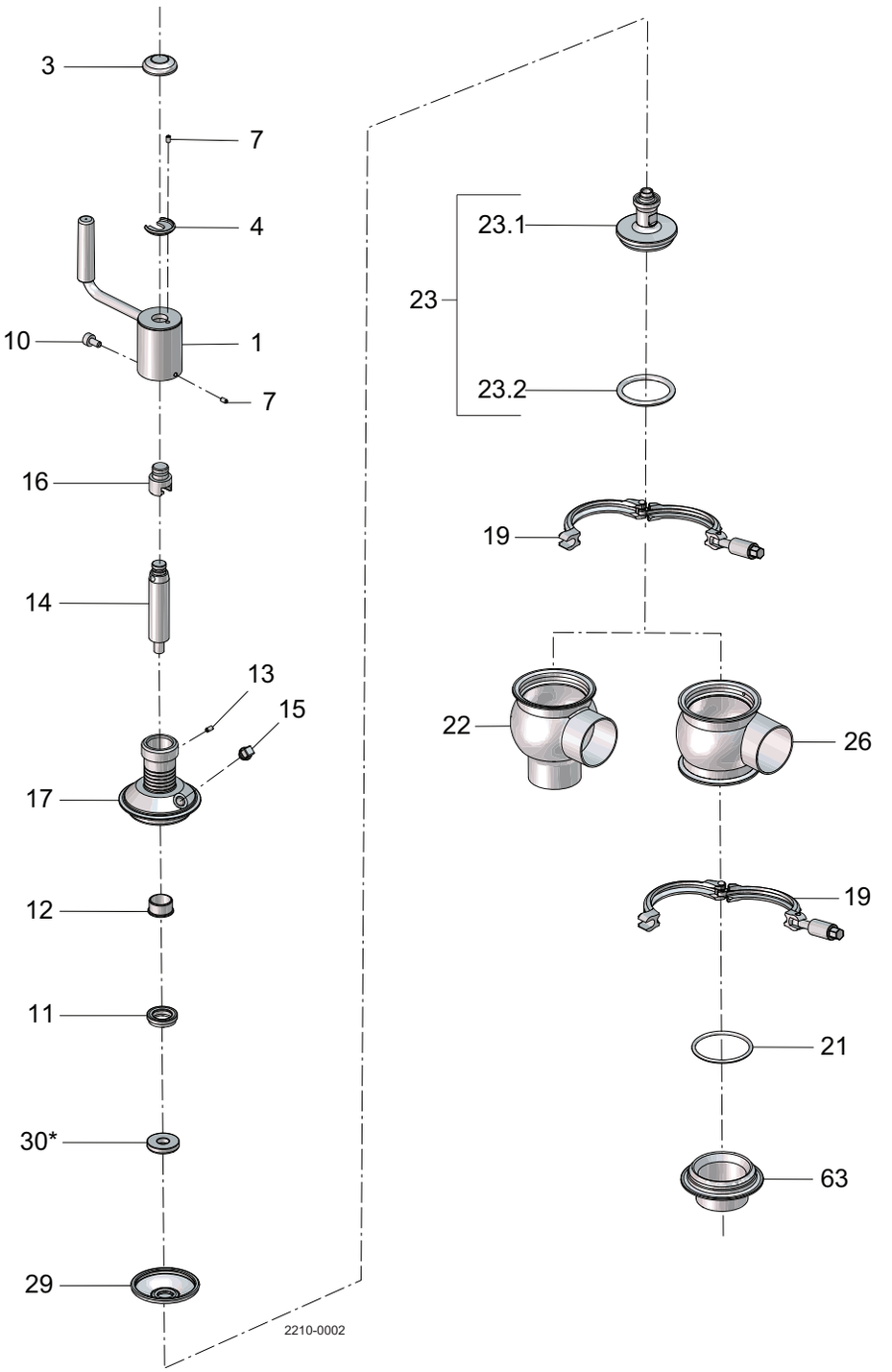

* = Disc not used on DN25/25 mm and DN40/38 mm

Pos	Qty	Denomination	DN25 25 mm	DN40 38 mm	DN50 51 mm	DN65 63.5 mm	DN80 76.1 mm	DN100 101.6 mm
Actuator								
		Crank mechanism complete	9613182001	9613182001	9613182002	9613182003	9613182004	9613182005
1	1	Crank	3135304621	3135304621	3135304621	3135304621	3135304621	3135304621
3	1	Cap	3135304681	3135304681	3135304681	3135304681	3135304681	3135304681
4	1	Washer	3135304671	3135304671	3135304671	3135304671	3135304671	3135304671
7	2	Set screw	22158192	22158192	22158192	22158192	22158192	22158192
10	1	Lock screw	3135305291	3135305291	3135305291	3135305291	3135305291	3135305291
11	1	Lip seal, HNBR	9613120502	9613120502	9613120502	9613120502	9613120502	9613120502
12	1	Bushing	9613125002	9613125002	9613125002	9613125002	9613125002	9613125002
13	1	Spring pin	9611992969	9611992969	9611992969	9611992969	9611992969	9611992969
14	1	Upper spindle	9613121901	9613121901	9613181801	9613181801	9613181801	9613181801
15	1	Plug	9613414101	9613414101	9613414101	9613414101	9613414101	9613414101
16	1	Stem extension	9613121801	9613121801	9613121801	9613121801	9613121801	9613121801
17	1	Sealing element	9613181301	9613181301	9613181401	9613181501	9613181601	9613181701
Clamp								
19	1	Clamp	9612939303	9612939303	9612939304	9612939305	9612939306	9612939307
29 ♦	1	Diaphragm						
		Diaphragm set, 10 pcs.	9614059437	9614059437	9614059438	9614059439	9614059440	9614059441
30	1	Disc for diaphragm			9613144101	9613144201	9613144301	9613144301
Tangential only								
21 ♦	1	O-ring, EPDM (standard)						
♦	1	O-ring, HNBR						
♦	1	O-ring, FPM						
		O-ring set, 10 pcs., EPDM	9614059422	9614059422	9614059425	9614059428	9614059431	9614059434
		O-ring set, 10 pcs., HNBR	9614059423	9614059423	9614059426	9614059429	9614059432	9614059435
		O-ring set, 10 pcs., FPM	9614059424	9614059424	9614059427	9614059430	9614059433	9614059436
Valve body standard (lower)								
22	1	Valve body, 2 ports, ISO	9613139501	9613139503	9613139505	9613139507	9613139509	9613139511
	1	Valve body, 3 ports, ISO	9613139502	9613139504	9613139506	9613139508	9613139510	9613139512
	1	Valve body, 2 ports, DIN	9613139601	9613139603	9613139605	9613139607	9613139609	9613139611
	1	Valve body, 3 ports, DIN	9613139602	9613139604	9613139606	9613139608	9613139610	9613139612
(Valve body tangential (welding ends))								
26	1	Valve body, 1 port, ISO			9613444801	9613444803	9613444805	9613444807
	1	Valve body, 2 ports, ISO			9613444802	9613444804	9613444806	9613444808
63	1	Port seal element, ISO			9634071101	9634071201	9634071301	9634071401
Valve Plug (shut-off)								
23	1	Plug, complete, ISO, EPDM (standard)	9613122101	9613122102	9613122103	9613122104	9613122105	9613122106
	1	Plug, complete, ISO, HNBR	9613122107	9613122108	9613122109	9613122110	9613122111	9613122112
	1	Plug, complete, ISO, FPM	9613122113	9613122114	9613122115	9613122116	9613122117	9613122118
	1	Plug, complete, DIN, EPDM (standard)	9613122119	9613122120	9613122121	9613122122	9613122123	9613122124
	1	Plug, complete, DIN, HNBR	9613122125	9613122126	9613122127	9613122128	9613122129	9613122130
	1	Plug, complete, DIN, FPM	9613122131	9613122132	9613122133	9613122134	9613122135	9613122136
23.1	1	Plug, ISO	9613143501	9613144501	9613143401	9613143402	9613143403	9613143404
	1	Plug, DIN	9613143502	9613144502	9613143405	9613143406	9613143407	9613143408
23.2♦	1	Plug seal, EPDM (standard)						
♦	1	Plug seal, HNBR						
♦	1	Plug seal, FPM						
		Plug seal set, 10 pcs., EPDM	9614059401	9614059404	9614059407	9614059410	9614059413	9614059416
		Plug seal set, 10 pcs., HNBR	9614059402	9614059405	9614059408	9614059411	9614059414	9614059417
		Plug seal set, 10 pcs., FPM	9614059403	9614059406	9614059409	9614059412	9614059415	9614059418

Recommended spare parts: service kits

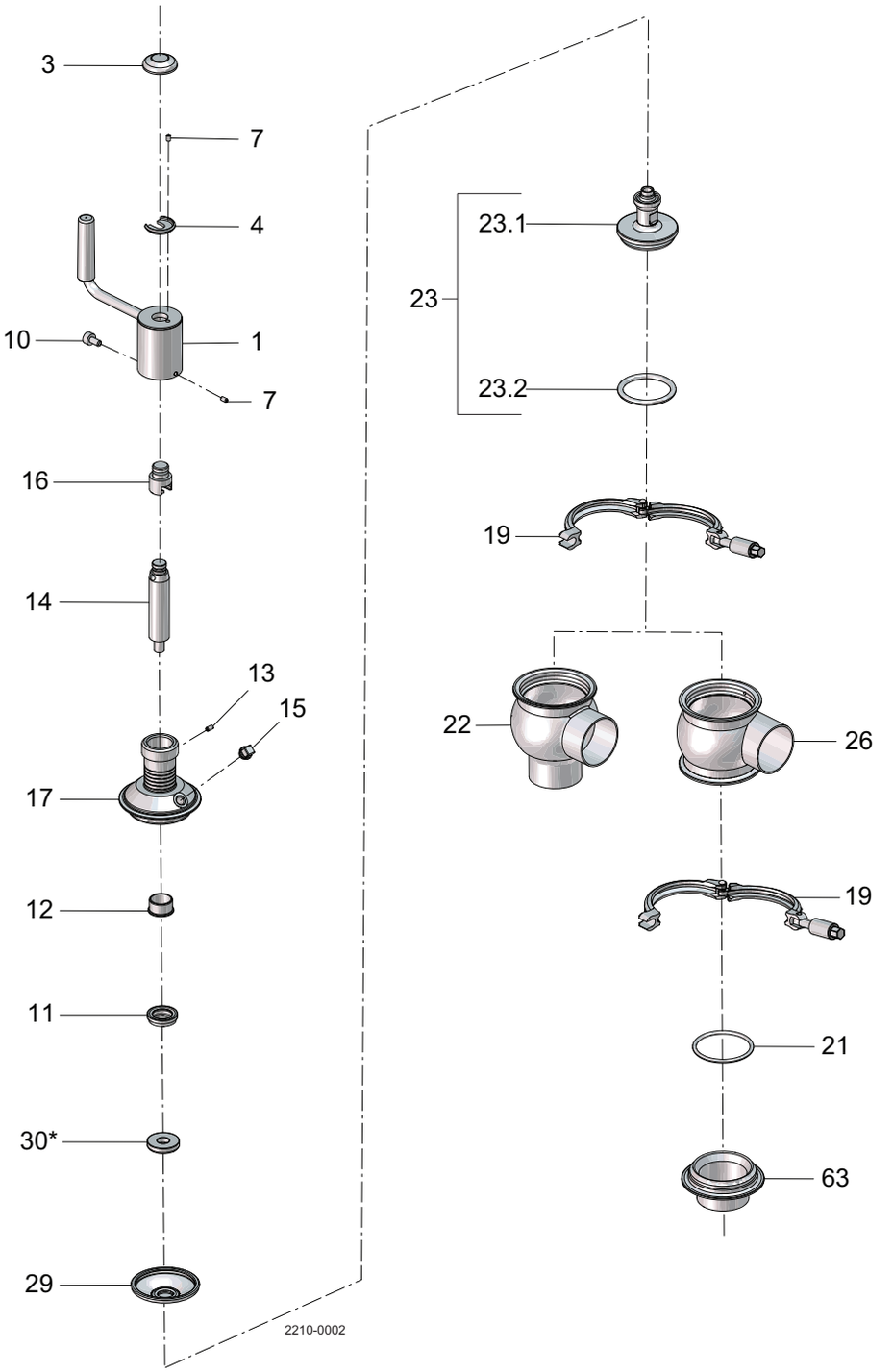

* = Disc not used on DN25/25 mm and DN40/38 mm

Service kits

		DN25 25 mm	DN40 38 mm	DN50 51 mm	DN65 63.5 mm	DN80 76.1 mm	DN100 101.6 mm
Standard							
♦	Service kit, EPDM	9611926543	9611926544	9611926545	9611926546	9611926547	9611926548
♦	Service kit, HNBR	9611926549	9611926550	9611926551	9611926552	9611926553	9611926554
♦	Service kit, FPM	9611926555	9611926556	9611926557	9611926558	9611926559	9611926560
Tangential only							
♦	Service kit, EPDM	9611926909	9611926910	9611926911	9611926912	9611926913	9611926914
♦	Service kit, HNBR	9611926915	9611926916	9611926917	9611926918	9611926919	9611926920
♦	Service kit, FPM	9611926921	9611926922	9611926923	9611926924	9611926925	9611926926

Parts marked with ♦ are included in the service kits (product wetted parts)
Tool for bushing (pos. 12) 9613160901

TD900-654

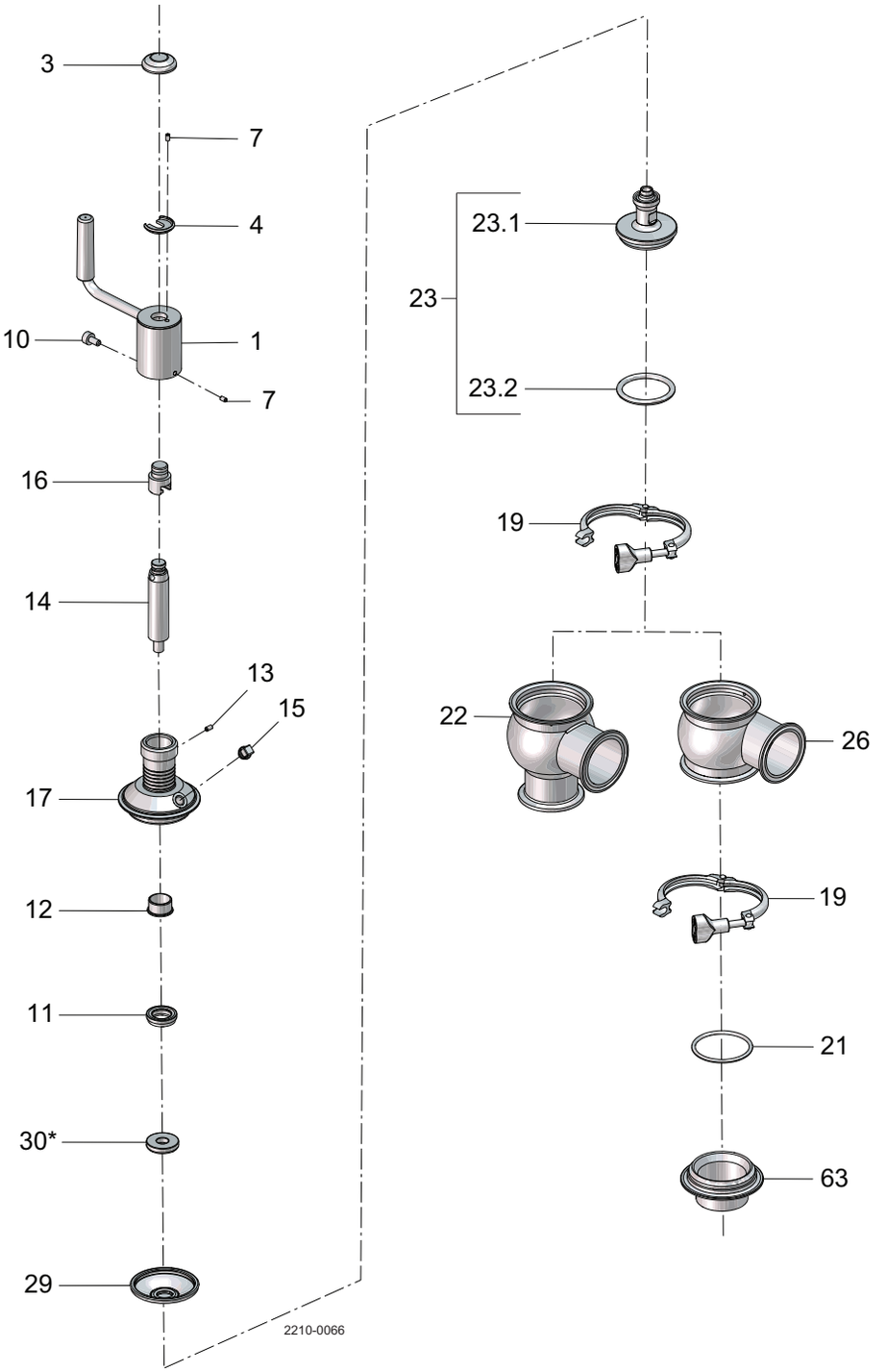
3
7
4
10
1
7
16
14
13
15
17
12
11
30*
29
2210-0066
23
23.1
23.2
19
22
26
19
21
63

Pos		Qty	Denomination	1"	1½"	2"	2½"	3"	4"
Actuator									
			Crank mechanism complete	9613182001	9613182001	9613182002	9613182003	9613182004	9613182005
1		1	Crank	3135304621	3135304621	3135304621	3135304621	3135304621	3135304621
3		1	Cap	3135304681	3135304681	3135304681	3135304681	3135304681	3135304681
4		1	Washer	3135304671	3135304671	3135304671	3135304671	3135304671	3135304671
7		2	Set screw	22158192	22158192	22158192	22158192	22158192	22158192
10		1	Lock screw	3135305291	3135305291	3135305291	3135305291	3135305291	3135305291
11		1	Lip seal, HNBR	9613120502	9613120502	9613120502	9613120502	9613120502	9613120502
12		1	Bushing	9613125002	9613125002	9613125002	9613125002	9613125002	9613125002
13		1	Spring pin	9611992969	9611992969	9611992969	9611992969	9611992969	9611992969
14		1	Upper spindle	9613121901	9613121901	9613181801	9613181801	9613181801	9613181801
15		1	Plug	96134141-01	96134141-01	96134141-01	96134141-01	96134141-01	96134141-01
16		1	Stem extension	9613121801	9613121801	9613121801	9613121801	9613121801	9613121801
17		1	Sealing element	9613181302	9613181302	9613181402	9613181502	9613181602	9613181702
Clamp									
19		1	Clamp	9612939316	9612939316	9612939317	9612939318	9612939319	9612939320
29	♦	1	Diaphragm						
			Diaphragm set, (10 pcs.)	9614059437	9614059437	9614059438	9614059439	9614059440	9614059441
30		1	Disc for diaphragm	9613144001	9613144001	9613144101	9613144201	9613144301	9613144301
Tangential only									
21	♦	1	O-ring, EPDM (standard)						
	♦	1	O-ring, HNBR						
	♦	1	O-ring, FPM						
			O-ring set, (10 pcs.) EPDM	9614059422	9614059422	9614059425	9614059428	9614059431	9614059434
			O-ring set, (10 pcs.) HNBR	9614059423	9614059423	9614059426	9614059429	9614059432	9614059435
			O-ring set, (10 pcs.) FPM	9614059424	9614059424	9614059427	9614059430	9614059433	9614059436
Valve body standard (lower)									
22		1	Valve body, 2 ports, clamp	9613161601	9613161603	9613161605	9613161607	9613161609	9613161611
		1	Valve body, 3 ports, clamp	9613161602	9613161604	9613161606	9613161608	9613161610	9613161612
		1	Valve body, 2 ports, welding ends	9613139513	9613139515	9613139517	9613139519	9613139521	9613139523
		1	Valve body, 3 ports, welding ends	9613139514	9613139516	9613139518	9613139520	9613139522	9613139524
(Valve body tangential)									
26		1	Valve body, 1 port, clamp			9613169002	9613169004	9613169006	9613169008
		1	Valve body, 2 ports, clamp			9613169018	9613169020	9613169022	9613169024
		1	Valve body, 1 port, welding ends			9613444809	9613444811	9613444813	9613444815
		1	Valve body, 2 ports, welding ends			9613444810	9613444812	9613444814	9613444816
63		1	Port seal element, clamp			9634070601	9634070701	9634070801	9634070901
		1	Port seal element, welding ends			9634071101	9634071201	9634071301	9634071401
Valve Plug (shut off)									
23		1	Plug, complete, EPDM (standard)	9613122101	9613122102	9613122103	9613122104	9613122105	9613122106
		1	Plug, complete, HNBR	9613122107	9613122108	9613122109	9613122110	9613122111	9613122112
		1	Plug, complete, FPM	9613122113	9613122114	9613122115	9613122116	9613122117	9613122118
23.1		1	Plug, shut off	9613143501	9613144501	9613143401	9613143402	9613143403	9613143404
23.2	♦	1	Plug seal, EPDM (standard)						
	♦	1	Plug seal, HNBR						
	♦	1	Plug seal, FPM						
			Plug seal set, (10 pcs.) EPDM	9614059401	9614059404	9614059407	9614059410	9614059413	9614059416
			Plug seal set, (10 pcs.) HNBR	9614059402	9614059405	9614059408	9614059411	9614059414	9614059417
			Plug seal set, (10 pcs.) FPM	9614059403	9614059406	9614059409	9614059412	9614059415	9614059418

Recommended spare parts: Service kits

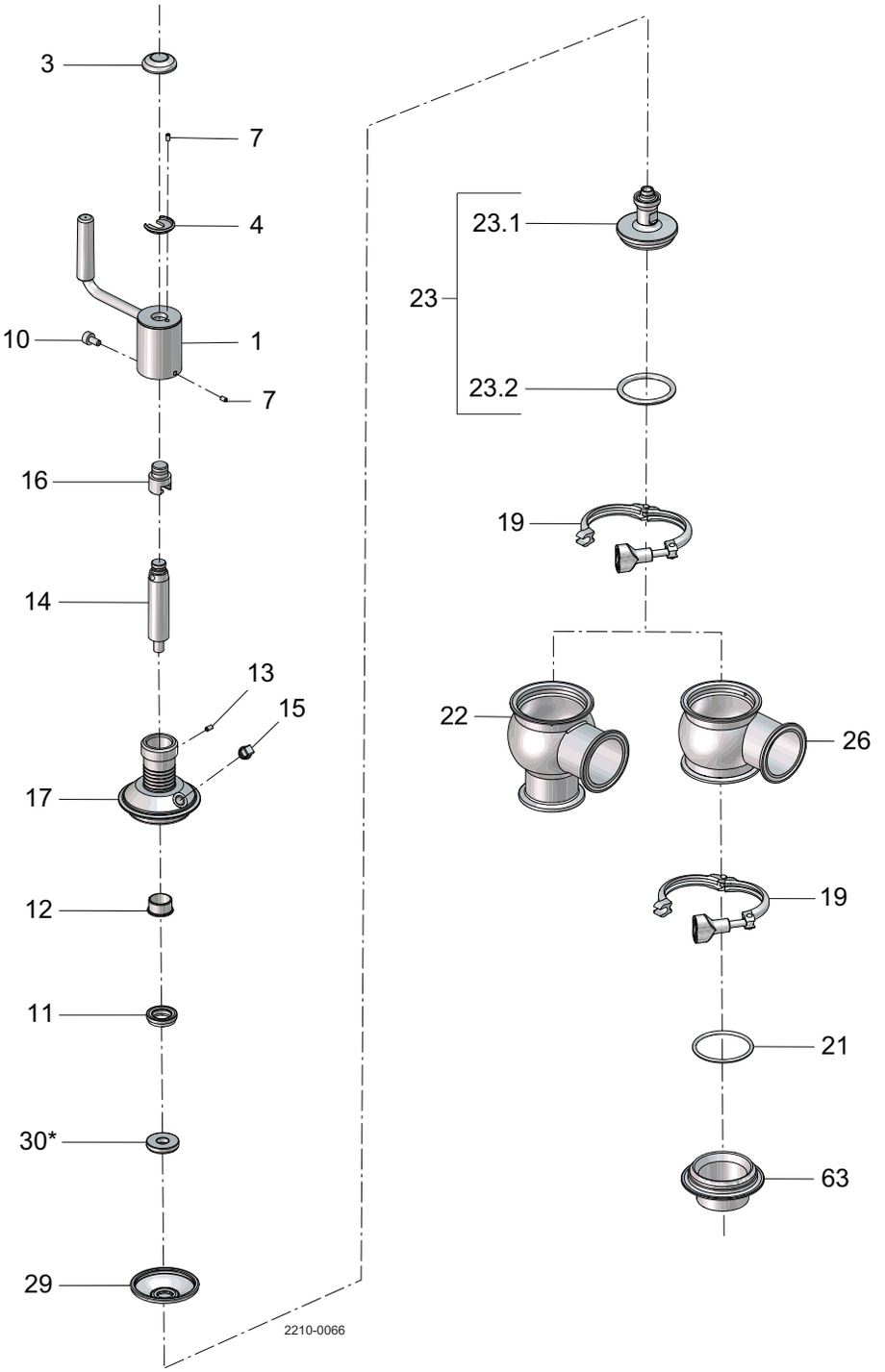
3
7
4
10
1
7
16
14
13
15
17
12
11
30*
29
2210-0066
23
23.1
23.2
19
22
26
19
21
63

Service Kits

		1”	1½”	2”	2½”	3”	4”
Standard							
♦	Service kit, EPDM	9611926543	9611926544	9611926545	9611926546	9611926547	9611926548
♦	Service kit, HNBR	9611926549	9611926550	9611926551	9611926552	9611926553	9611926554
♦	Service kit, FPM	9611926555	9611926556	9611926557	9611926558	9611926559	9611926560
Tangential only							
♦	Service kit, EPDM	9611926909	9611926910	9611926911	9611926912	9611926913	9611926914
♦	Service kit, HNBR	9611926915	9611926916	9611926917	9611926918	9611926919	9611926920
♦	Service kit, FPM	9611926921	9611926922	9611926923	9611926924	9611926925	9611926926

Parts marked with ♦ are included in the service kits (product wetted parts)
Tool for bushing (pos. 12) 9613-1609-01

TD900-657

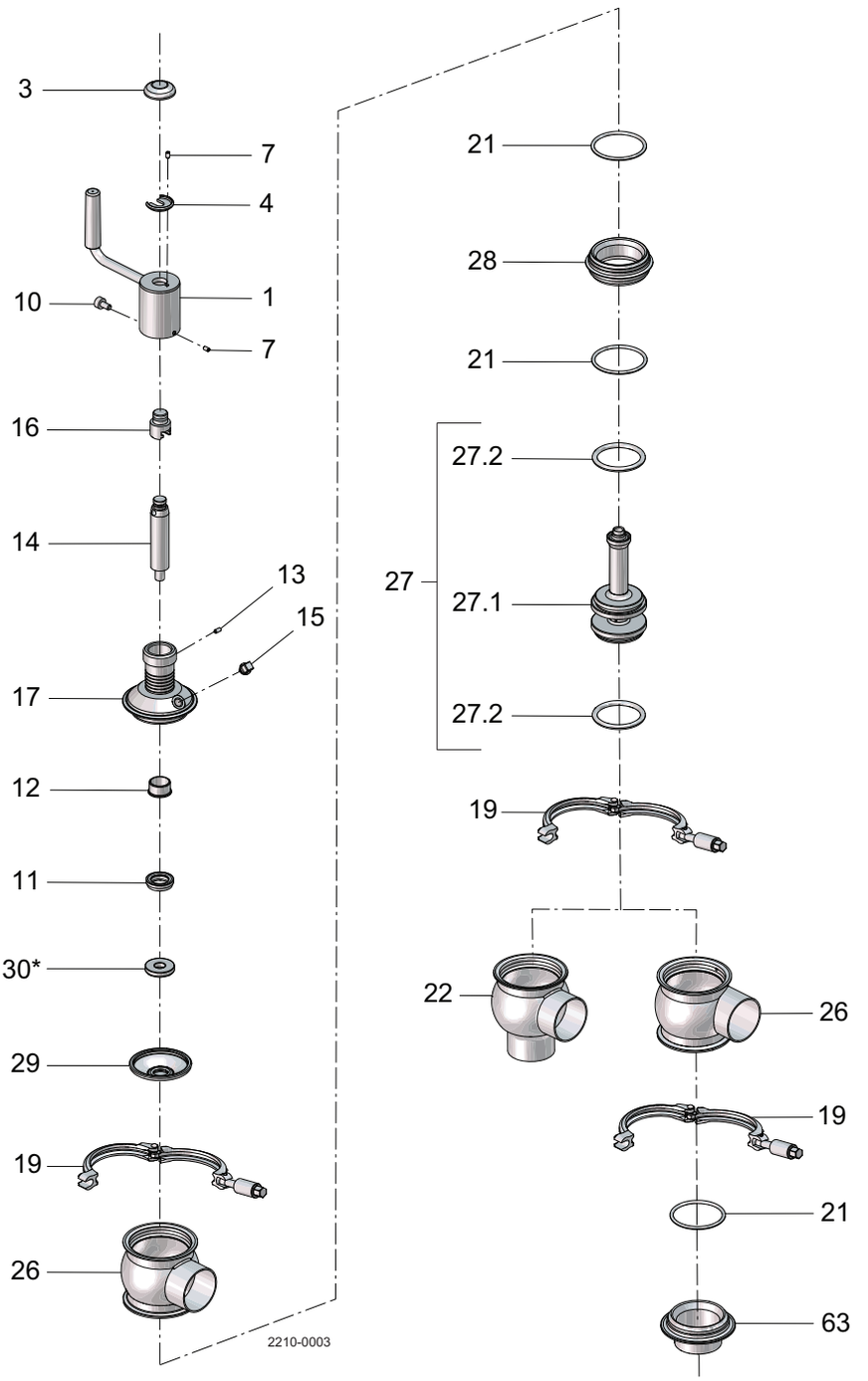

* = Disc not used on DN25/25 mm and DN40/38 mm

Pos		Qty	Denomination	DN25 25 mm	DN40 38 mm	DN50 51 mm	DN65 63.5 mm	DN80 76.1 mm	DN100 101.6 mm
Actuator									
			Crank mechanism complete	9613182001	9613182001	9613182002	9613182003	9613182004	9613182005
1		1	Crank	3135304621	3135304621	3135304621	3135304621	3135304621	3135304621
3		1	Cap	3135304681	3135304681	3135304681	3135304681	3135304681	3135304681
4		1	Washer	3135304671	3135304671	3135304671	3135304671	3135304671	3135304671
7		2	Set screw	22158192	22158192	22158192	22158192	22158192	22158192
10		1	Lock screw	3135305291	3135305291	3135305291	3135305291	3135305291	3135305291
11		1	Lip seal, HNBR	9613120502	9613120502	9613120502	9613120502	9613120502	9613120502
12		1	Bushing	9613125002	9613125002	9613125002	9613125002	9613125002	9613125002
13		1	Spring pin	9611992969	9611992969	9611992969	9611992969	9611992969	9611992969
14		1	Upper spindle	9613121901	9613121901	9613181801	9613181801	9613181801	9613181801
15		1	Plug	9613414101	9613414101	9613414101	9613414101	9613414101	9613414101
16		1	Stem extension	9613121801	9613121801	9613121801	9613121801	9613121801	9613121801
17		1	Sealing element	9613181301	9613181301	9613181401	9613181501	9613181601	9613181701
Clamp									
19		2	Clamp	9612939303	9612939303	9612939304	9612939305	9612939306	9612939307
29	♦	1	Diaphragm						
			Diaphragm set, 10 pcs.	9614059437	9614059437	9614059438	9614059439	9614059440	9614059441
30		1	Disc for diaphragm			9613144101	9613144201	9613144301	9613144301
21	♦	2	O-ring, EPDM (standard)						
	♦	2	O-ring, HNBR						
	♦	2	O-ring, FPM						
		3	O-ring, EPDM (standard) - Tangential only						
		3	O-ring, HNBR - Tangential only						
		3	O-ring, FPM - Tangential only						
			O-ring set, 10 pcs.. EPDM	9614059422	9614059422	9614059425	9614059428	9614059431	9614059434
			O-ring set, 10 pcs. HNBR	9614059423	9614059423	9614059426	9614059429	9614059432	9614059435
			O-ring set, 10 pcs.. FPM	9614059424	9614059424	9614059427	9614059430	9614059433	9614059436
Seat									
28		1	Seat	9613127501	9613127502	9613127503	9613127504	9613127505	9613127506
Valve Body (upper)									
26		1	Valve body, 1 port, ISO	9613139301	9613139303	9613139305	9613139307	9613139309	9613139311
		1	Valve body, 2 ports, ISO	9613139302	9613139304	9613139306	9613139308	9613139310	9613139312
		1	Valve body, 1 port, DIN	9613139401	9613139403	9613139405	9613139407	9613139409	9613139411
		1	Valve body, 2 ports, DIN	9613139402	9613139404	9613139406	9613139408	9613139410	9613139412
Valve body (lower)									
22		1	Valve body, 2 ports, ISO	9613139501	9613139503	9613139505	9613139507	9613139509	9613139511
		1	Valve body, 3 ports, ISO	9613139502	9613139504	9613139506	9613139508	9613139510	9613139512
		1	Valve body, 2 ports, DIN	9613139601	9613139603	9613139605	9613139607	9613139609	9613139611
		1	Valve body, 3 ports, DIN	9613139602	9613139604	9613139606	9613139608	9613139610	9613139612
(Valve body tangential (welding ends))									
26		2	Valve body, 1 port, ISO			9613444801	9613444803	9613444805	9613444807
		2	Valve body, 2 ports, ISO			9613444802	9613444804	9613444806	9613444808
63		1	Port seal element, ISO			9634071101	9634071201	9634071301	9634071401
Valve Plug (change-over)									
27		1	Plug, complete, ISO, EPDM (standard)	9613122301	9613122302	9613122303	9613122304	9613122305	9613122306
		1	Plug, complete, ISO, HNBR	9613122307	9613122308	9613122309	9613122310	9613122311	9613122312
		1	Plug, complete, ISO, FPM	9613122313	9613122314	9613122315	9613122316	9613122317	9613122318
		1	Plug, complete, DIN, EPDM (standard)	9613122319	9613122320	9613122321	9613122322	9613122323	9613122324
		1	Plug, complete, DIN, complete, HNBR	9613122325	9613122326	9613122327	9613122328	9613122329	9613122330
		1	Plug, complete, DIN, FPM	9613122331	9613122332	9613122333	9613122334	9613122335	9613122336
27.1		1	Plug, ISO	9613143601	9613143901	9613143902	9613143903	9613143904	9613143905
		1	Plug, DIN	9613143602	9613143906	9613143907	9613143908	9613143909	9613143910
27.2	♦	2	Plug seal, EPDM (standard)						
	♦	2	Plug seal, HNBR						
	♦	2	Plug seal, FPM						
			Plug seal set, 10 pcs., EPDM	9614059401	9614059404	9614059407	9614059410	9614059413	9614059416
			Plug seal set, 10 pcs., HNBR	9614059402	9614059405	9614059408	9614059411	9614059414	9614059417
			Plug seal set, 10 pcs., FPM	9614059403	9614059406	9614059409	9614059412	9614059415	9614059418

Recommended spare parts: service kits

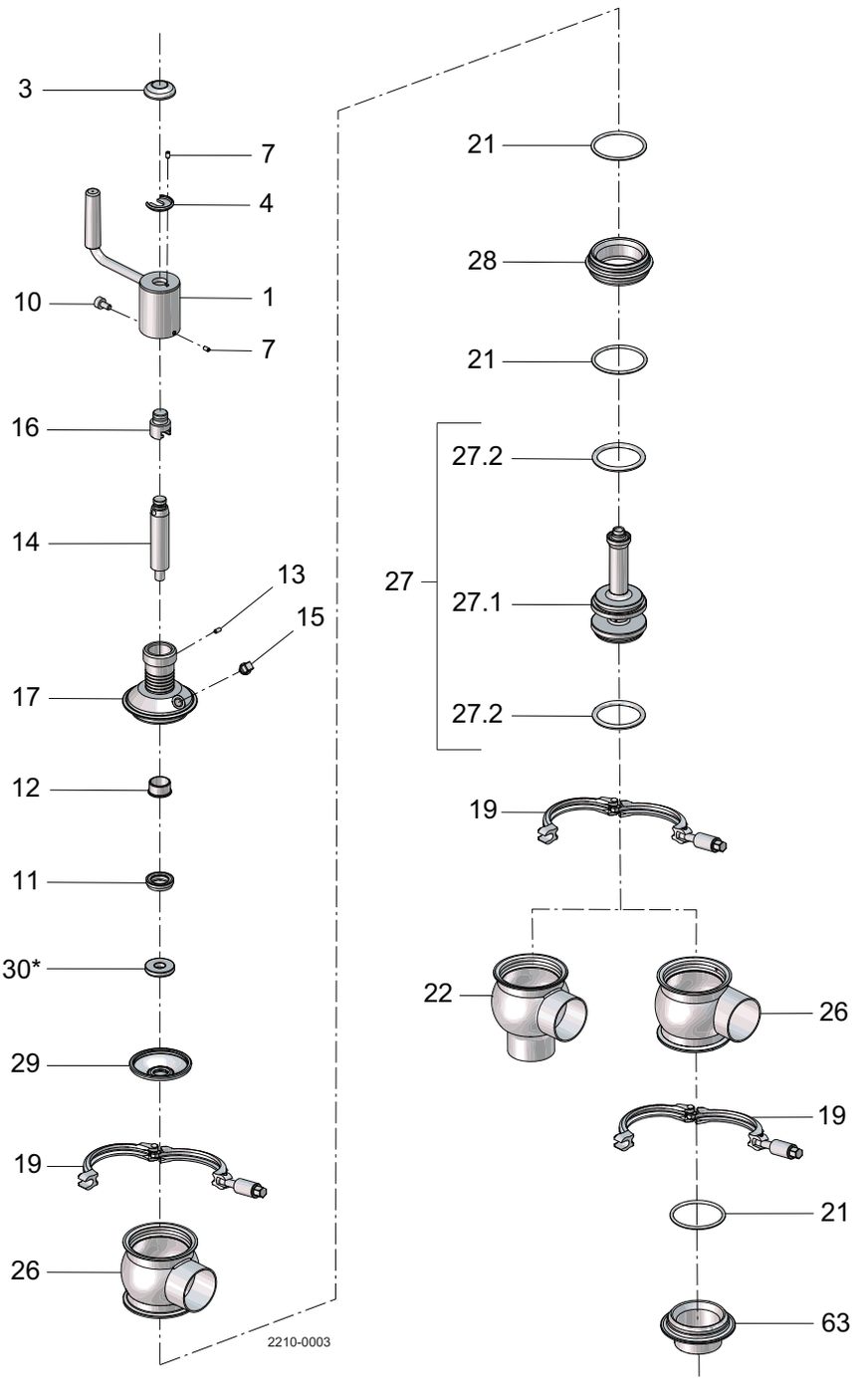

* = Disc not used on DN25/25 mm and DN40/38 mm

Service kits

		DN25 25 mm	DN40 38 mm	DN50 51 mm	DN65 63.5 mm	DN80 76.1 mm	DN100 101.6 mm
♦	Service kit, EPDM	9611926615	9611926616	9611926617	9611926618	9611926619	9611926620
♦	Service kit, HNBR	9611926621	9611926622	9611926623	9611926624	9611926625	9611926626
♦	Service kit, FPM	9611926627	9611926628	9611926629	9611926630	9611926631	9611926632
Tangential only							
♦	Service kit, EPDM	9611926927	9611926928	9611926929	9611926930	9611926931	9611926932
♦	Service kit, HNBR	9611926933	9611926934	9611926935	9611926936	9611926937	9611926938
♦	Service kit, FPM	9611926939	9611926940	9611926941	9611926942	9611926943	9611926944

Parts marked with ♦ are included in the service kits (product wetted parts)
Tool for bushing (pos. 12) 9613160901

TD900-654

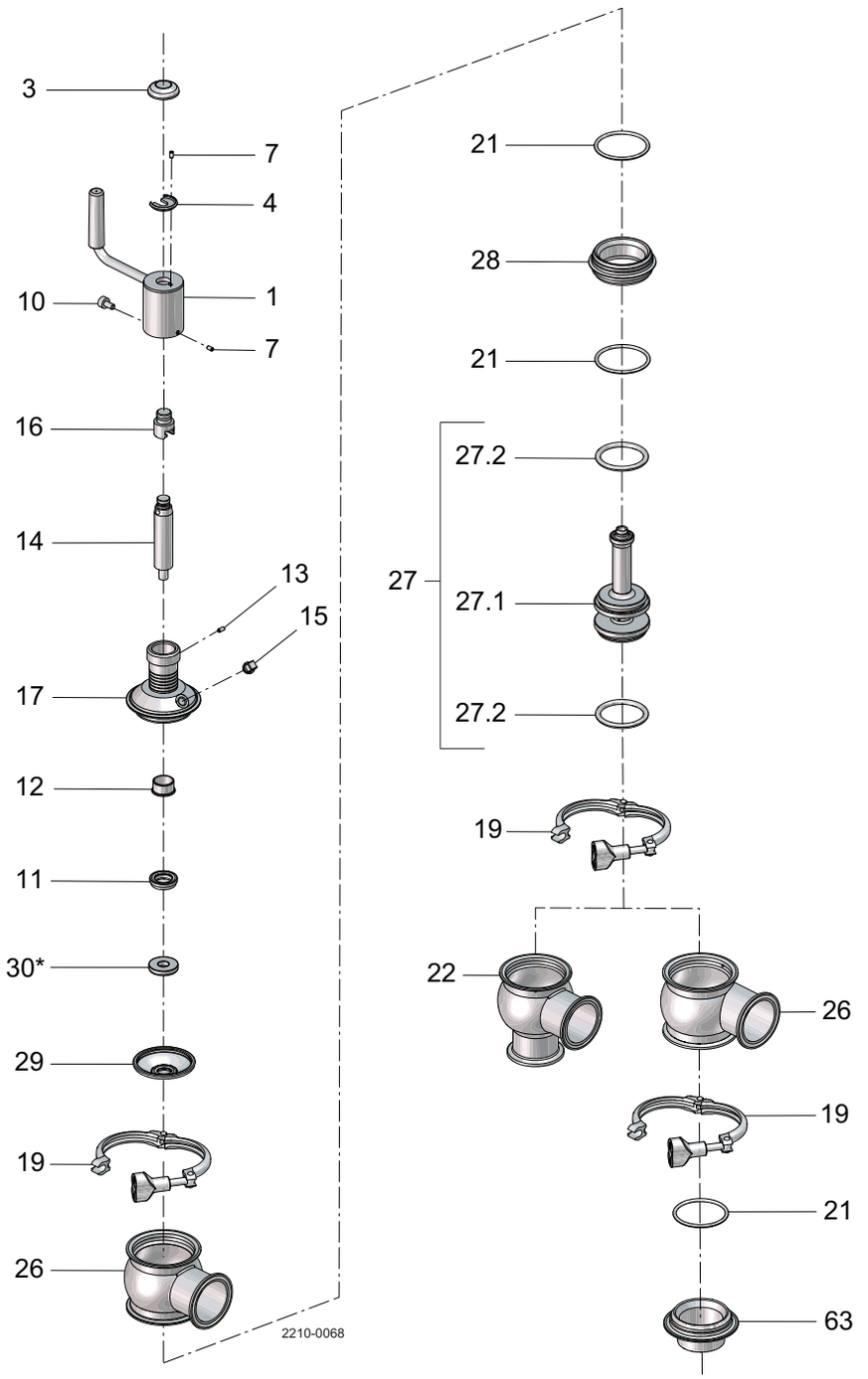
3
7
4
10
1
7
16
14
13
15
17
12
11
30*
29
19
26
2210-0068
21
28
21
27.2
27
27.1
27.2
19
22
26
19
21
63

Unique SSV, aseptic manually operated, change-over (US version)

Pos	Qty	Denomination	1"	1½"	2"	2½"	3"	4"
Actuator								
		Crank mechanism complete	9613182001	9613182001	9613182002	9613182003	9613182004	9613182005
1	1	Crank	3135304621	3135304621	3135304621	3135304621	3135304621	3135304621
3	1	Cap	3135304681	3135304681	3135304681	3135304681	3135304681	3135304681
4	1	Washer	3135304671	3135304671	3135304671	3135304671	3135304671	3135304671
7	2	Set screw	22158192	22158192	22158192	22158192	22158192	22158192
10	1	Lock screw	3135305291	3135305291	3135305291	3135305291	3135305291	3135305291
11	1	Lip seal, HNBR	9613120502	9613120502	9613120502	9613120502	9613120502	9613120502
12	1	Bushing	9613125002	9613125002	9613125002	9613125002	9613125002	9613125002
13	1	Spring pin	9611992969	9611992969	9611992969	9611992969	9611992969	9611992969
14	1	Upper spindle	9613121901	9613121901	9613181801	9613181801	9613181801	9613181801
15	1	Plug	96134141-01	96134141-01	96134141-01	96134141-01	96134141-01	96134141-01
16	1	Stem extension	9613121801	9613121801	9613121801	9613121801	9613121801	9613121801
17	1	Sealing element	9613181302	9613181302	9613181402	9613181502	9613181602	9613181702
Clamp								
19	2	Clamp	9612939316	9612939316	9612939317	9612939318	9612939319	9612939320
29 ♦	1	Diaphragm						
		Diaphragm set, (10 pcs.)	9614059437	9614059437	9614059438	9614059439	9614059440	9614059441
30	1	Disc for diaphragm	9613144001	9613144001	9613144101	9613144201	9613144301	9613144301
Standard								
21 ♦	2	O-ring, EPDM (standard)						
♦	2	O-ring, HNBR						
♦	2	O-ring, FPM						
Tangential only								
♦	3	O-ring, EPDM (standard)						
♦	3	O-ring, HNBR						
♦	3	O-ring, FPM						
		O-ring set, (10 pcs.) EPDM	9614059422	9614059422	9614059425	9614059428	9614059431	9614059434
		O-ring set, (10 pcs.) HNBR	9614059423	9614059423	9614059426	9614059429	9614059432	9614059435
		O-ring set, (10 pcs.) FPM	9614059424	9614059424	9614059427	9614059430	9614059433	9614059436
Seat								
28	1	Seat	9613127501	9613127502	9613127503	9613127504	9613127505	9613127506
Valve Body (upper)								
26	1	Valve body, 1 ports, clamp	9613161501	9613161503	9613161505	9613161507	9613161509	9613161511
	1	Valve body, 2 ports, clamp	9613161502	9613161504	9613161506	9613161508	9613161510	9613161512
	1	Valve body, 1 ports, welding ends	9613139313	9613139315	9613139317	9613139319	9613139321	9613139323
	1	Valve body, 2 ports, welding ends	9613139314	9613139316	9613139318	9613139320	9613139322	9613139324
Valve body (lower)								
22	1	Valve body, 2 ports, clamp	9613161601	9613161603	9613161605	9613161607	9613161609	9613161611
	1	Valve body, 3 ports, clamp	9613161602	9613161604	9613161606	9613161608	9613161610	9613161612
	1	Valve body, 2 ports, welding ends	9613139513	9613139515	9613139517	9613139519	9613139521	9613139523
	1	Valve body, 3 ports, welding ends	9613139514	9613139516	9613139518	9613139520	9613139522	9613139524
(Valve body tangential)								
26	2	Valve body, 1 port, clamp			9613169002	9613169004	9613169006	9613169008
	2	Valve body, 2 ports, clamp			9613169018	9613169020	9613169022	9613169024
	2	Valve body, 1 port, welding ends			9613444809	9613444811	9613444813	9613444815
	2	Valve body, 2 ports, welding ends			9613444810	9613444812	9613444814	9613444816
63	1	Port seal element, clamp			9634070601	9634070701	9634070801	9634070901
		Port seal element, welding ends			9634071101	9634071201	9634071301	9634071401
Valve Plug (change over)								
27	1	Plug, complete, EPDM (standard)	9613122301	9613122302	9613122303	9613122304	9613122305	9613122306
	1	Plug, complete, HNBR	9613122307	9613122308	9613122309	9613122310	9613122311	9613122312
	1	Plug, complete, FPM	9613122313	9613122314	9613122315	9613122316	9613122317	9613122318
27.1	1	Plug	9613143601	9613143901	9613143902	9613143903	9613143904	9613143905
27.2♦	2	Plug seal, EPDM (standard)						
♦	2	Plug seal, HNBR						
♦	2	Plug seal, FPM						
		Plug seal set, (10 pcs.) EPDM	9614059401	9614059404	9614059407	9614059410	9614059413	9614059416
		Plug seal set, (10 pcs.) HNBR	9614059402	9614059405	9614059408	9614059411	9614059414	9614059417
		Plug seal set, (10 pcs.) FPM	9614059403	9614059406	9614059409	9614059412	9614059415	9614059418

Recommended spare parts: Service kits

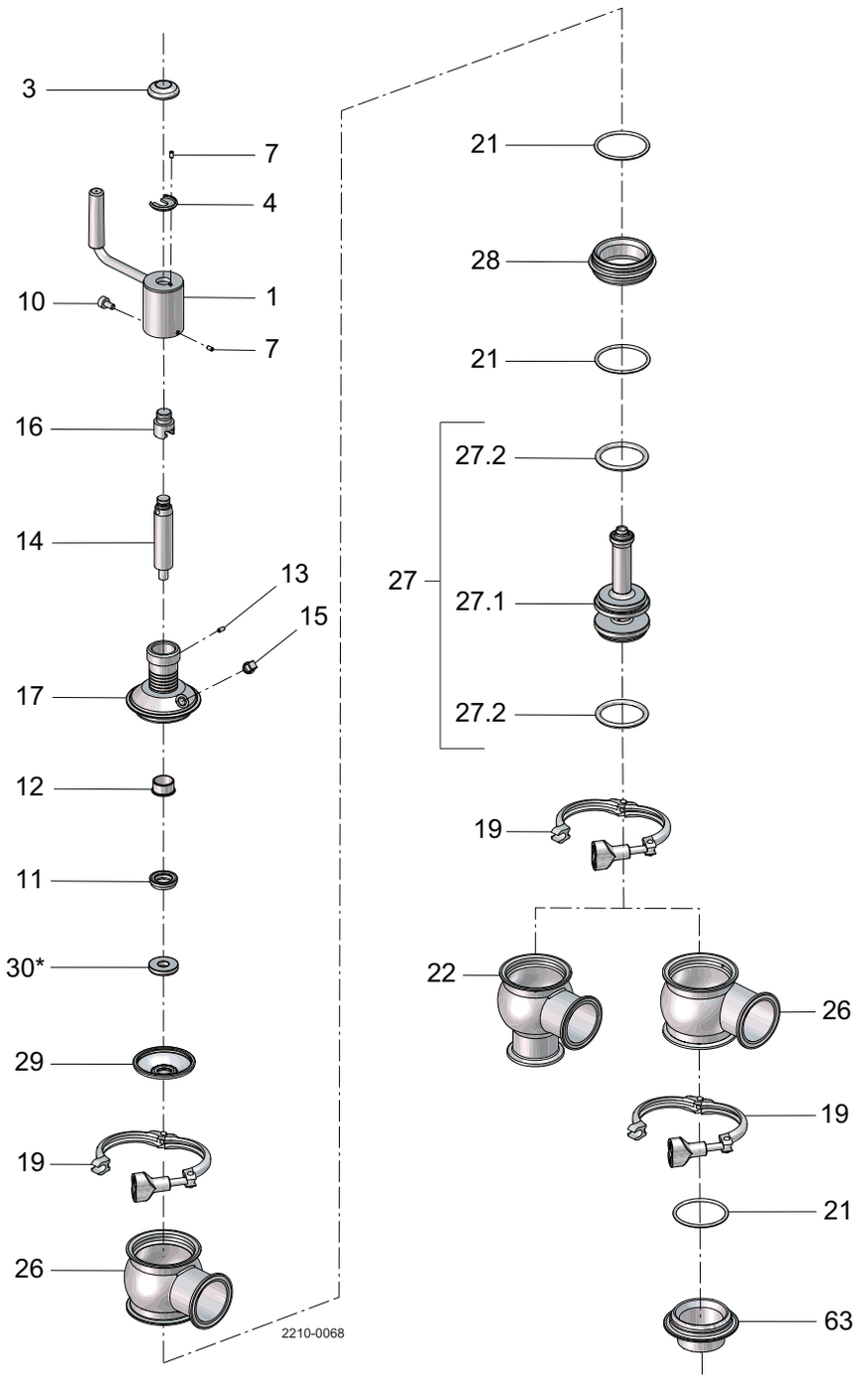
3
7
4
10
1
7
16
14
13
15
17
12
11
30*
29
19
26
2210-0068
21
28
21
27.2
27
27.1
27.2
19
22
26
19
21
63

Service Kits

		1”	1½”	2“	2½”	3”	4”
Standard							
♦	Service kit, EPDM	9611926615	9611926616	9611926617	9611926618	9611926619	9611926620
♦	Service kit, HNBR	9611926621	9611926622	9611926623	9611926624	9611926625	9611926626
♦	Service kit, FPM	9611926627	9611926628	9611926629	9611926630	9611926631	9611926632
Tangential only							
♦	Service kit, EPDM	9611926927	9611926928	9611926929	9611926930	9611926931	9611926932
♦	Service kit, HNBR	9611926933	9611926934	9611926935	9611926936	9611926937	9611926938
♦	Service kit, FPM	9611926939	9611926940	9611926941	9611926942	9611926943	9611926944

Parts marked with ♦ are included in the service kits (product wetted parts)
Tool for bushing (pos. 12) 9613-1609-01

TD900-657

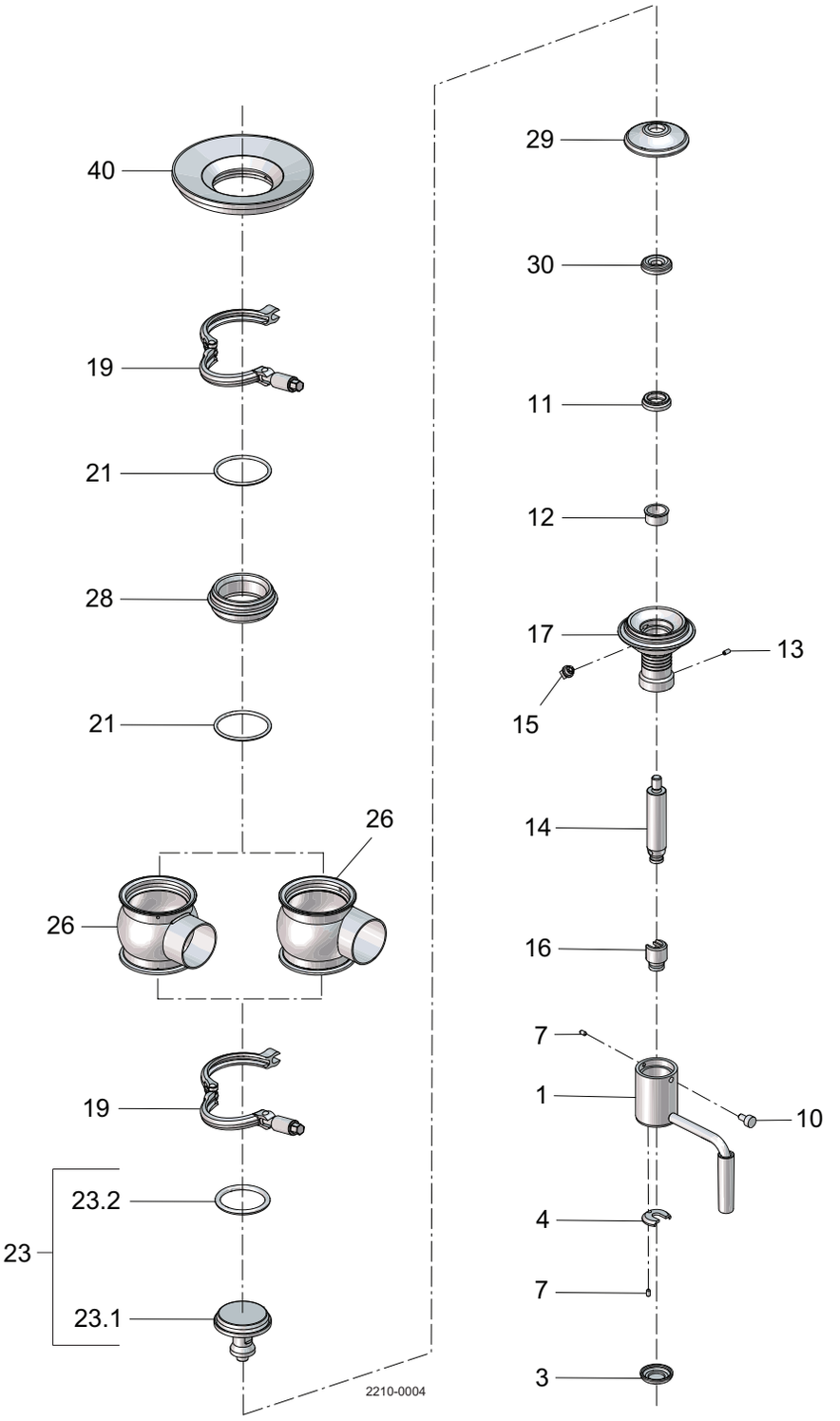
40
19
21
28
21
26
26
19
23.2
23
23.1
2210-0004
29
30
11
12
17
13
15
14
16
7
1
10
4
7
3

Pos		Qty	Denomination	DN50 51 mm	DN65 63.5 mm	DN80 76.1 mm	DN100 101.6 mm
Actuator							
			Crank mechanism complete	9613182002	9613182003	9613182004	9613182005
1		1	Crank	3135304621	3135304621	3135304621	3135304621
3		1	Cap	3135304681	3135304681	3135304681	3135304681
4		1	Washer	3135304671	3135304671	3135304671	3135304671
7		2	Set screw	22158192	22158192	22158192	22158192
10		1	Lock screw	3135305291	3135305291	3135305291	3135305291
11		1	Lip seal, HNBR	9613120502	9613120502	9613120502	9613120502
12		1	Bushing	9613125002	9613125002	9613125002	9613125002
13		1	Spring pin	9611992969	9611992969	9611992969	9611992969
14		1	Upper spindle	9613181801	9613181801	9613181801	9613181801
15		1	Plug	9613414101	9613414101	9613414101	9613414101
16		1	Stem extension	9613121801	9613121801	9613121801	9613121801
17		1	Sealing element	9613181401	9613181501	9613181601	9613181701
Clamp							
19		1	Clamp	9612939304	9612939305	9612939306	9612939307
21	♦	2	O-ring, EPDM (standard)				
	♦	2	O-ring, HNBR				
	♦	2	O-ring, FPM				
			O-ring set, 10 pcs., EPDM	9614059425	9614059428	9614059431	9614059434
			O-ring set, 10 pcs., HNBR	9614059426	9614059429	9614059432	9614059435
			O-ring set, 10 pcs., FPM	9614059427	9614059430	9614059433	9614059436
29	♦	1	Diaphragm				
			Diaphragm set, 10 pcs.	9614059438	9614059439	9614059440	9614059441
30		1	Disc for diaphragm	9613144101	9613144201	9613144301	9613144301
Valve body standard (upper)							
26		1	Valve body, 1 port, ISO	9613139305	9613139307	9613139309	9613139311
		1	Valve body, 2 ports, ISO	9613139306	9613139308	9613139310	9613139312
		1	Valve body, 1 port, DIN	9613139405	9613139407	9613139409	9613139411
		1	Valve body, 2 ports, DIN	9613139406	9613139408	9613139410	9613139412
(Valve body tangential (welding ends))							
		1	Valve body, 1 port, ISO	9613444801	9613444803	9613444805	9613444807
		1	Valve body, 2 ports, ISO	9613444802	9613444804	9613444806	9613444808
Seat							
28		1	Seat	9613127503	9613127504	9613127505	9613127506
Tank flange							
40		1	Tank flange	9634069901	9634070001	9634070101	9634070201
Valve Plug (shut-off)							
23		1	Plug, complete, ISO, EPDM (standard)	9613122103	9613122104	9613122105	9613122106
		1	Plug, complete, ISO, HNBR	9613122109	9613122110	9613122111	9613122112
		1	Plug, complete, ISO, FPM	9613122115	9613122116	9613122117	9613122118
		1	Plug, complete, DIN, EPDM (standard)	9613122121	9613122122	9613122123	9613122124
		1	Plug, complete, DIN, HNBR	9613122127	9613122128	9613122129	9613122130
		1	Plug, complete, DIN, FPM	9613122133	9613122134	9613122135	9613122136
23.1		1	Plug, ISO	9613143401	9613143402	9613143403	9613143404
		1	Plug, DIN	9613143405	9613143406	9613143407	9613143408
23.2	♦	1	Plug seal, EPDM (standard)				
	♦	1	Plug seal, HNBR				
	♦	1	Plug seal, FPM				
			Plug seal set, 10 pcs., EPDM	9614059407	9614059410	9614059413	9614059416
			Plug seal set, 10 pcs., HNBR	9614059408	9614059411	9614059414	9614059417
			Plug seal set, 10 pcs., FPM	9614059409	9614059412	9614059415	9614059418

Recommended spare parts: Service kits

Service kits

		DN50 51 mm	DN65 63.5 mm	DN80 76.1 mm	DN100 101.6 mm
♦	**Service kit, EPDM**	**9611926945**	**9611926946**	**9611926947**	**9611926948**
♦	**Service kit, HNBR**	**9611926949**	**9611926950**	**9611926951**	**9611926952**
♦	**Service kit, FPM**	**9611926953**	**9611926954**	**9611926955**	**9611926946**

Parts markend with ♦ are included in the service kits (product wetted parts)

Tool for bushing (pos. 12) 9613160901

TD900-655

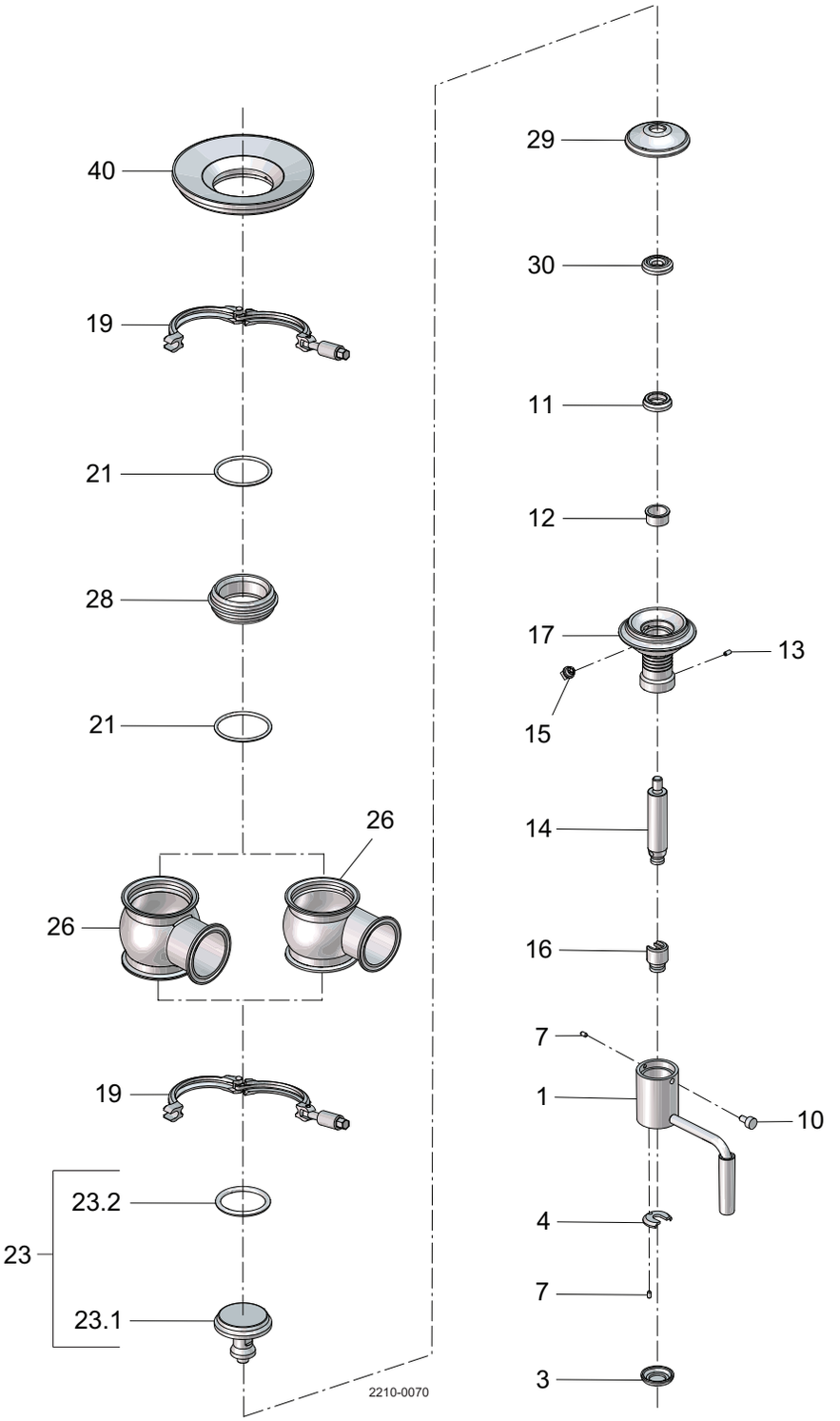
40
19
21
28
21
26
26
19
23
23.2
23.1
2210-0070
29
30
11
12
17
13
15
14
16
7
1
10
4
7
3

Pos		Qty	Denomination	2”	2½”	3”	4”
Actuator							
			Crank mechanism complete	9613182002	9613182003	9613182004	9613182005
1		1	Crank	3135304621	3135304621	3135304621	3135304621
3		1	Cap	3135304681	3135304681	3135304681	3135304681
4		1	Washer	3135304671	3135304671	3135304671	3135304671
7		2	Set screw	22158192	22158192	22158192	22158192
10		1	Lock screw	3135305291	3135305291	3135305291	3135305291
11		1	Lip seal, HNBR	9613120502	9613120502	9613120502	9613120502
12		1	Bushing	9613125002	9613125002	9613125002	9613125002
13		1	Spring pin	9611992969	9611992969	9611992969	9611992969
14		1	Upper spindle	9613181801	9613181801	9613181801	9613181801
15		1	Plug	96134141-01	96134141-01	96134141-01	96134141-01
16		1	Stem extension	9613121801	9613121801	9613121801	9613121801
17		1	Sealing element	9613181402	9613181502	9613181602	9613181702
Clamp							
19		1	Clamp	9612939323	9612939324	9612939325	9612939326
21	♦	2	O-ring, EPDM (standard)				
	♦	2	O-ring, HNBR				
	♦	2	O-ring, FPM				
			O-ring set, (10 pcs.) EPDM	9614059425	9614059428	9614059431	9614059434
			O-ring set, (10 pcs.) HNBR	9614059426	9614059429	9614059432	9614059435
			O-ring set, (10 pcs.) FPM	9614059427	9614059430	9614059433	9614059436
29	♦	1	Diaphragm				
			Diaphragm set, (10 pcs.)	9614059438	9614059439	9614059440	9614059441
30		1	Disc for diaphragm	9613144101	9613144201	9613144301	9613144301
Valve body standard (upper)							
26		1	Valve body, 1 ports, clamp	9613161505	9613161507	9613161509	9613161511
		1	Valve body, 2 ports, clamp	9613161506	9613161508	9613161510	9613161512
		1	Valve body, 1 ports, welding ends	9613139317	9613139319	9613139321	9613139323
		1	Valve body, 2 ports, welding ends	9613139318	9613139320	9613139322	9613139324
(Valve body tangential)							
		2	Valve body, 1 port, clamp	9613169002	9613169004	9613169006	9613169008
		2	Valve body, 2 ports, clamp	9613169018	9613169020	9613169022	9613169024
		2	Valve body, 1 port, welding ends	9613444809	9613444811	9613444813	9613444815
		2	Valve body, 2 ports, welding ends	9613444810	9613444812	9613444814	9613444816
Seat							
28		1	Seat	9613127503	9613127504	9613127505	9613127506
Tank flange							
40		1	Tank flange	9634069901	9634070001	9634070101	9634070201
Valve Plug (shut off)							
23		1	Plug, complete, EPDM (standard)	9613122103	9613122104	9613122105	9613122106
		1	Plug, complete, HNBR	9613122109	9613122110	9613122111	9613122112
		1	Plug, complete, FPM	9613122115	9613122116	9613122117	9613122118
23.1		1	Plug	9613143401	9613143402	9613143403	9613143404
23.2	♦	1	Plug seal, EPDM (standard)				
	♦	1	Plug seal, HNBR				
	♦	1	Plug seal, FPM				
			Plug seal set, (10 pcs.) EPDM	9614059407	9614059410	9614059413	9614059416
			Plug seal set, (10 pcs.) HNBR	9614059408	9614059411	9614059414	9614059417
			Plug seal set, (10 pcs.) FPM	9614059409	9614059412	9614059415	9614059418

Recommended spare parts: Service kits

Service Kits

		2”	2½”	3”	4”
♦	**Service kit, EPDM**	**9611926945**	**9611926946**	**9611926947**	**9611926948**
♦	**Service kit, HNBR**	**9611926949**	**9611926950**	**9611926951**	**9611926952**
♦	**Service kit, FPM**	**9611926953**	**9611926954**	**9611926955**	**9611926956**

Parts marked with ♦ are included in the service kits (product wetted parts)
Tool for bushing (pos. 12) 9613-1609-01

TD900-658

Maintainable Actuator
Refer to actuator spares

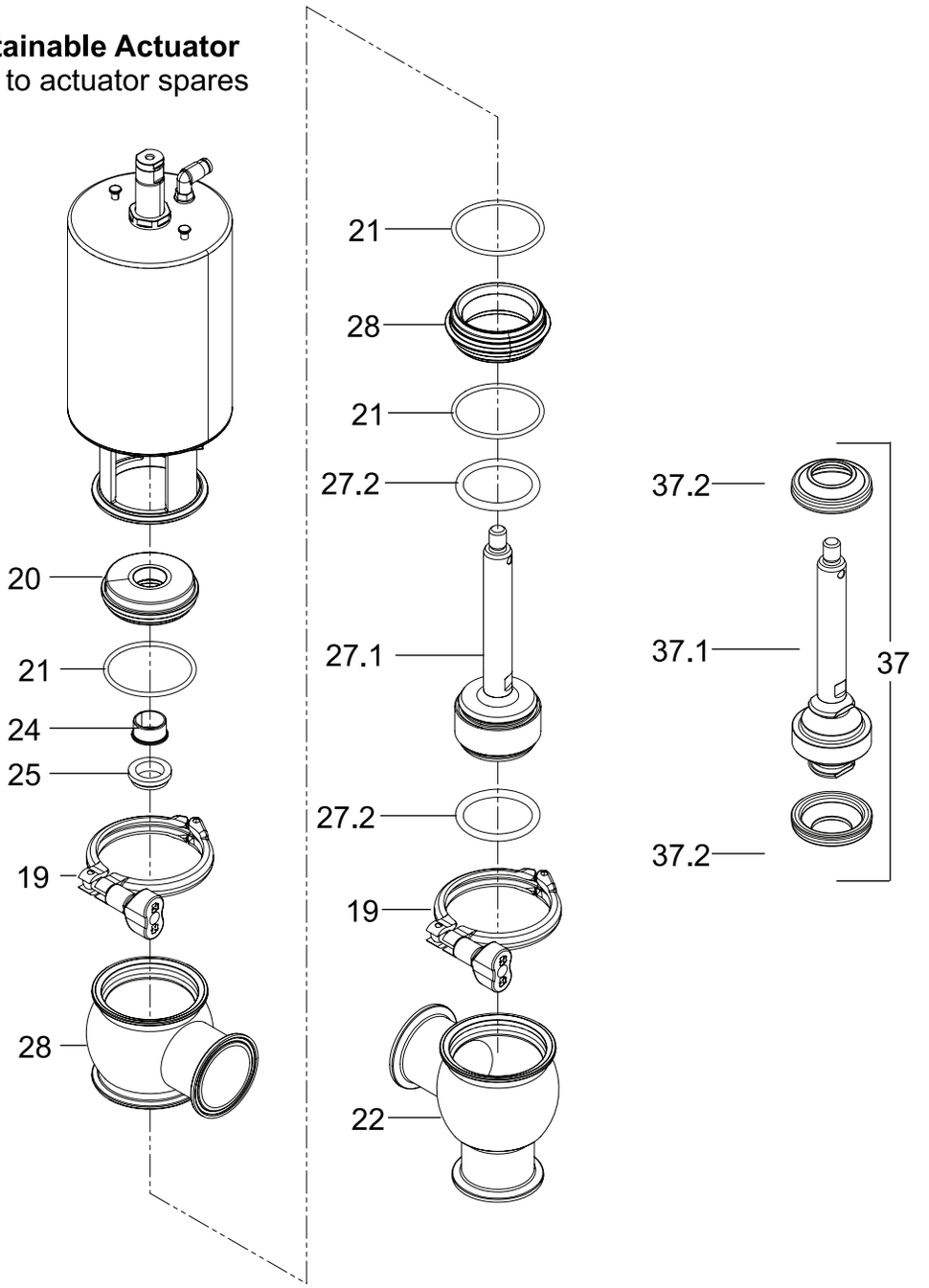

Pos	Qty	Denomination	1 1/2”	2”	2 1/2”	3”
19	2	Clamp	9612939316	9612939317	9612939318	9612939319
20	1	Bonnet	9613127102	9613127103	9613127104	9613127105
21 □	3	O-Ring, EPDM				
	3	O-Ring, HNBR				
	3	O-Ring, FPM				
		O-Ring, Set (10 pcs.), EPDM	9614059422	9614059425	9614059428	9614059431
		O-Ring, Set (10 pcs.), HNBR	9614059423	9614059426	9614059429	9614059432
		O-Ring, Set (10 pcs.), FPM	9614059424	96140594267	9614059430	9614059433
24	1	Bushing	9613125002	9613125002	9613125002	9613125002
25 □	2	Lip Seal, EPDM				
	2	Lip Seal, HNBR				
	2	Lip Seal, FPM				
		Lip Seal, Set (10 pcs.), EPDM				
		Lip Seal, Set (10 pcs.), HNBR				
		Lip Seal, Set (10 pcs.), FPM				
28	1	Seat, Upper	9613127502	9613127503	9613127504	9613127505
26	1	Valve Body, Upper, 1 port, clamp	9634095550	9613161505	9613161507	9613161509
22	1	Valve Body, Lower, 2 port, clamp	9634095549	9613161505	9613161507	9613161509
27	1	Valve Plug - Elastomer (STD), ISO, complete, EPDM	9613127702	9613127703	9613127704	9613127705
	1	Valve Plug - Elastomer (STD), ISO, complete, HNBR	9613127714	9613127153	9613127716	9613127717
	1	Valve Plug - Elastomer (STD), ISO, complete, FPM	9613127726	9613127127	9613127728	9613127729
27.1	1	Valve Plug - Elastomer (STD), ISO	9613140002	9613140003	9613140004	9613140005
27.2□	2	Valve Plug - Elastomer seal, EPDM				
	2	Valve Plug - Elastomer seal, HNBR				
	2	Valve Plug - Elastomer seal, FPM				
		Valve Plug - Elastomer seal, set (10 pcs.) EPDM	9614059404	9614059407	9614059410	9614059413
		Valve Plug - Elastomer seal, set (10 pcs.) HNBR	9614059405	9614059408	9614059411	9614059414
		Valve Plug - Elastomer seal, set (10 pcs.) FPM	9614059406	96140594089	9614059412	9614059415
37	1	Valve Plug - TR2 (Optional) Complete	9613155502	9613155503	9613155504	9613155505
37.1	1	Valve Plug - TR2 (Optional)	9613155401	9613155502	9613155403	9613155404
37.2□	2	Valve Plug Seal, PTFE TR2				
		Valve Plug seal, set (10 pcs.) PTFE TR2	9614059449	9614059450	9614059451	9614059452

Parts marked with □ are included in the service kits.

Note: 1 Service Kit is needed for each valve.

		1 1/2”	2”	2 1/2”	3”
□	**Service Kit, EPDM**	**9611926580**	**9611926581**	**9611926582**	**9611926583**
□	**Service Kit, HNBR**	**9611926586**	**9611926587**	**9611926588**	**9611926590**
□	**Service Kit, FPM**	**9611926592**	**9611926593**	**9611926594**	**9611926595**
□	**Service Kit, TR2 W/EPDM**	**9611926633**	**9611926634**	**9611926635**	**9611926636**
□	**Service Kit, TR2 W/HNBR**	**9611926638**	**9611926639**	**9611926640**	**9611926641**
□	**Service Kit, TR2 W/FPM**	**9611926643**	**9611926644**	**9611926645**	**9611926646**

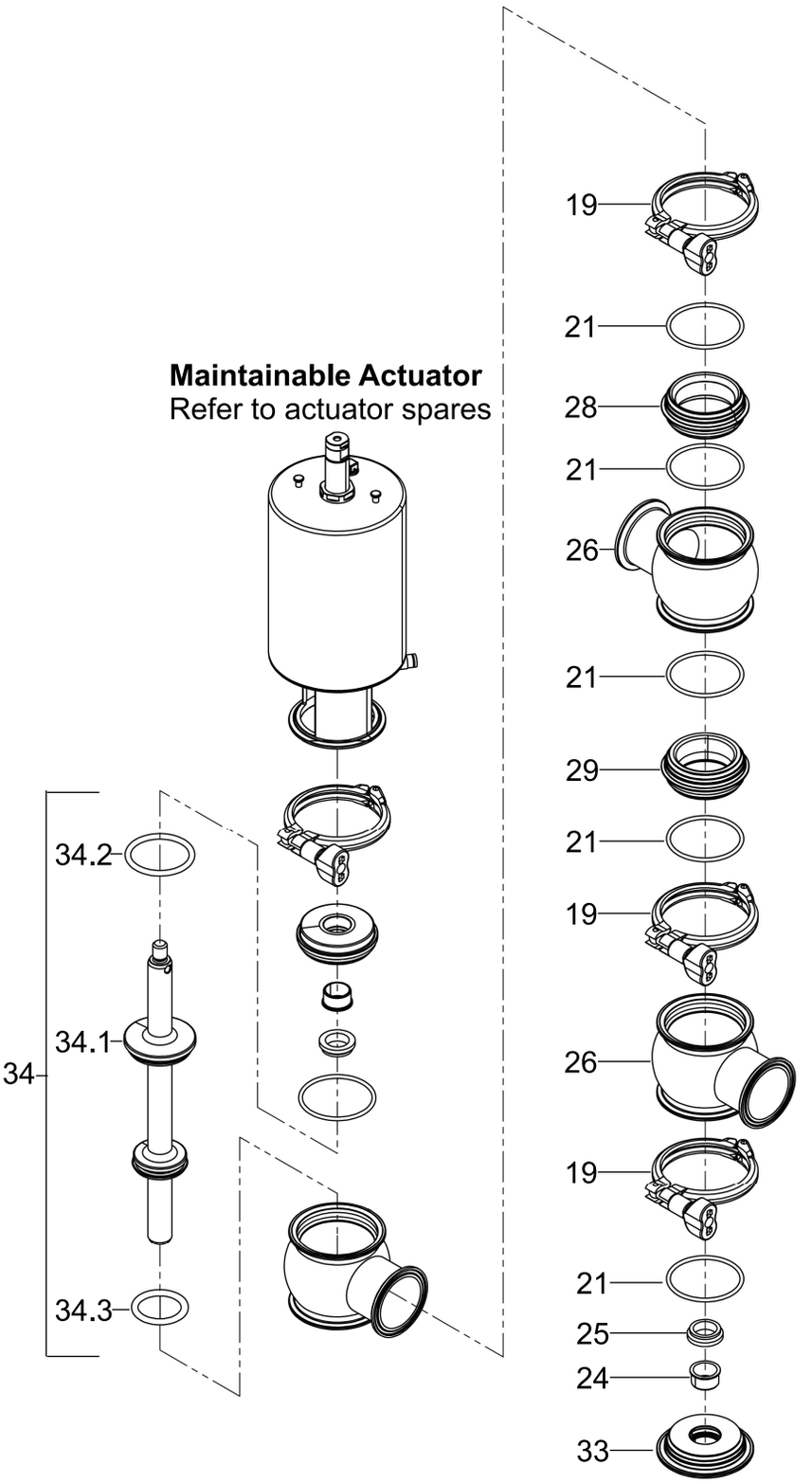
Maintainable Actuator
Refer to actuator spares
19
21
28
21
26
21
29
21
19
26
19
21
25
24
33
34
34.1
34.2
34.3

Pos	Qty	Denomination	2”	2 1/2”	3”	4”
19	4	Clamp	9612939317	9612939318	9612939319	9612939320
20	1	Upper Bonnet	9613127103	9613127104	9613127105	9613127106
21 □	6	Bonnet O-ring, EPDM				
	6	Bonnet O-ring, HNBR				
	6	Bonnet O-ring, FPM				
		Bonnet O-ring, set (10 pcs.), EPDM	9614059425	9614059428	9614059431	9614059434
		Bonnet O-ring, set (10 pcs.), HNBR	9614059426	9614059429	9614059432	9614059435
		Bonnet O-ring, set (10 pcs.), FPM	9614059427	9614059430	9614059433	9614059436
24	2	Bonnet Bushing	9613125002	9613125002	9613125002	9613125002
25 □	2	Bonnet Lip Seal, EPDM				
	2	Bonnet Lip Seal, HNBR				
	2	Bonnet Lip Seal, FPM				
		Bonnet Lip Seal, Set (10 pcs.), EPDM	9614059419	9614059419	9614059419	9614059419
		Bonnet Lip Seal, Set (10 pcs.), HNBR	9614059420	9614059420	9614059420	9614059420
		Bonnet Lip Seal, Set (10 pcs.), FPM	9614059421	9614059421	9614059421	9614059421
33	1	Lower Bonnet	9634092101	9634092102	9634092103	9634092104
28	1	Seat, Upper	9613127503	9613127504	9613127505	9613127506
29	1	Seat, Lower	9634092001	9634092002	9634092003	9634092004
26	3	Valve Body, upper, 1 port, clamp	9613161505	9613161507	9613161509	9613161511
	3	Valve Body, tangential, upper, 1 port, clamp	9613169002	9613169004	9613169006	9613169008
34	1	Valve Plug, RA-FDV, complete, EPDM	9614258701	9614258702	9614258703	9614258704
	1	Valve Plug, RA-FDV, complete, HNBR	9614258705	9614258706	9614258707	9614258708
34.1	1	Valve Plug, RA-FDV	9634091101	9634091102	9634091103	9634091104
34.2□	1	Valve Plug seal, Upper, EPDM				
	1	Valve Plug seal, Upper, HNBR				
	1	Valve Plug seal, Upper, FPM				
	1	Valve Plug seal, Upper, set (10 pcs.), EPDM	9614059407	9614059410	9614059413	9614059416
	1	Valve Plug seal, Upper, set (10 pcs.), HNBR	9614059408	9614059411	9614059414	9614059417
	1	Valve Plug seal, Upper, set (10 pcs.), FPM	9614059409	9614059412	9614059415	9614059418
34.3□	1	Plug seal, Lower, EPDM				
	1	Plug seal, Lower, HNBR				
	1	Plug seal, Lower, FPM				
	1	Plug seal, Lower, set (10 pcs.), EPDM	9614059404	9614059407	9614059410	9614059413
	1	Plug seal, Lower, set (10 pcs.), HNBR	9614059405	9614059408	9614059411	9614059414
	1	Plug seal, Lower, set (10 pcs.), FPM	9614059406	9614059409	9614059412	9614059415

Parts marked with □ are included in the service kits.

Note: 1 Service Kit is needed for each valve.

		2”	2 1/2”	3”	4”
□	**Service Kit, EPDM**	**9611928567**	**9611928568**	**9611928569**	**9611928570**
□	**Service Kit, HNBR**	**9611928571**	**9611928572**	**9611928573**	**9611928574**
□	**Service Kit, FPM**	**9611928575**	**9611928576**	**9611928577**	**9611928578**

Failed Closed Actuator for Reverse Acting Exploded View

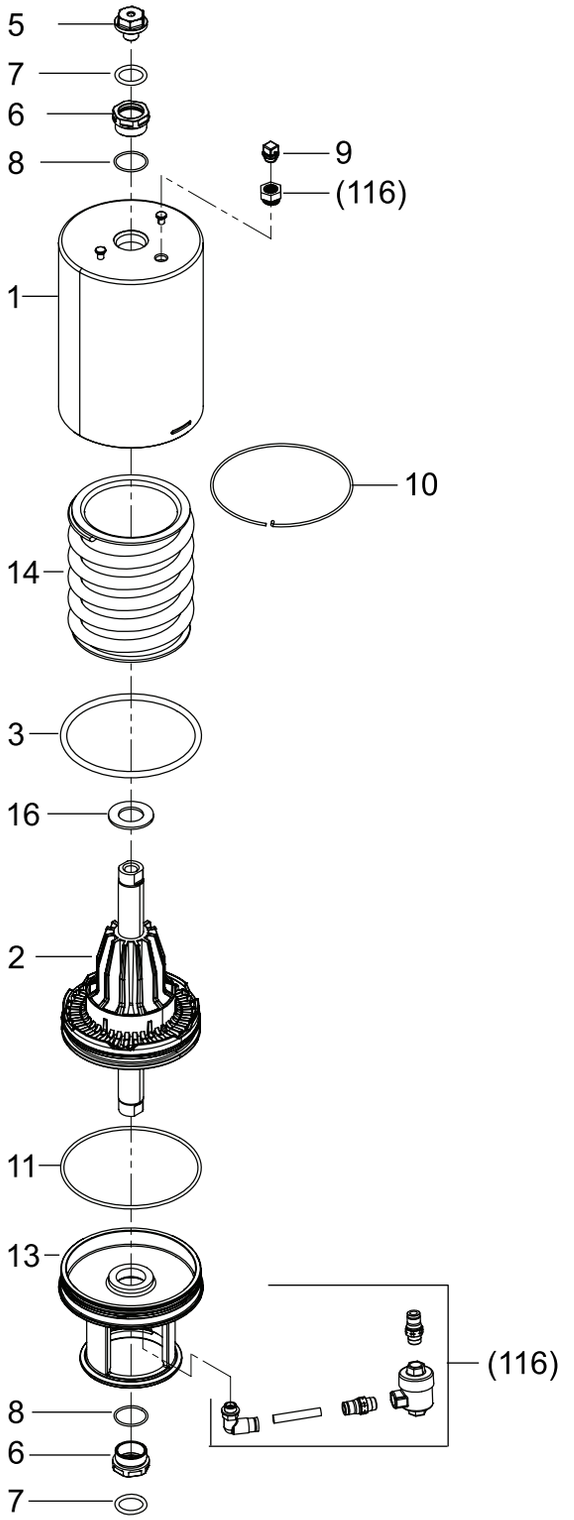

Failed Open Actuator for Standard Exploded View

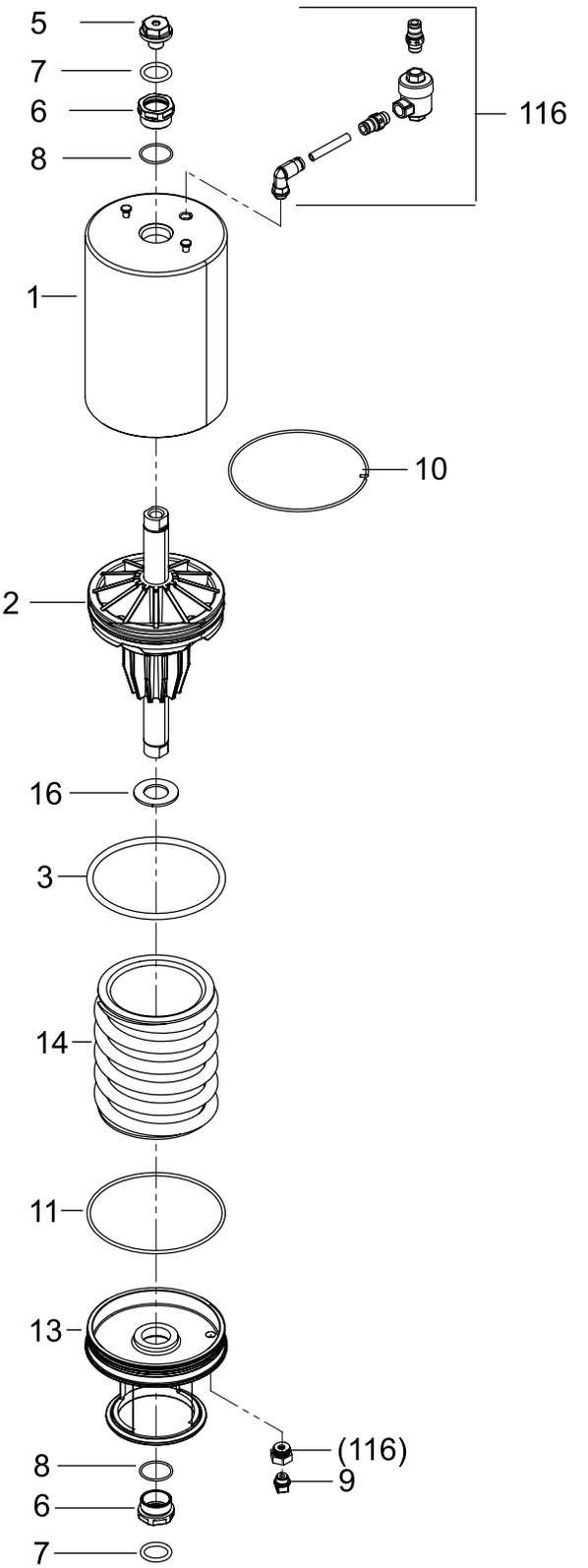

Pos		Qty	Denomination	1 1/2”	2”	2 1/2”	3”	4”
			Actuator Complete (Normally Closed)	NA	9634093801	9634093802	9634093803	9634093804
			Actuator Complete (Normally Opened)	9634093805	9634093806	9634093807	9634093808	NA
1		1	Cylinder, (polished)	9615220404	9615220405	9615220405	9615220406	9615220406
2		1	Piston	9613132201	9613132301	9613132301	9613132401	9613132401
3	□	1	O-ring					
5		1	Adapter, steel	9614065301	9614065301	9614065301	9614065301	9614065301
6	□	2	Bushing					
7	□	2	O-ring					
8	□	2	O-ring					
9		1	Plug	9613414101	9613414101	9613414101	9613414101	9613414101
10		1	Lock wire	9613143201	9613143202	9613143202	9613143203	9613143203
11	□	1	O-ring					
116		1	Kit, Quick Exhaust	9615228201	9615228201	9615228201	9615228201	9615228201
14		1	Spring assembly	9613132501	9613132502	9613132502	9613132503	9613132503
15		1	Bottom	9615220501	9615220502	9615220502	9615220503	9615220503
16	□	1	Support disc					
13		1	Yoke	9613154301	9613154402	9613154502	9613154603	9613154703

Parts marked with □ are included in the service kits.

		1 1/2”	2”	2 1/2”	3”	4”
□	**Service kit, NO , NC.**	**9611926497**	**9611926498**	**9611926498**	**9611926499**	**9611926499**

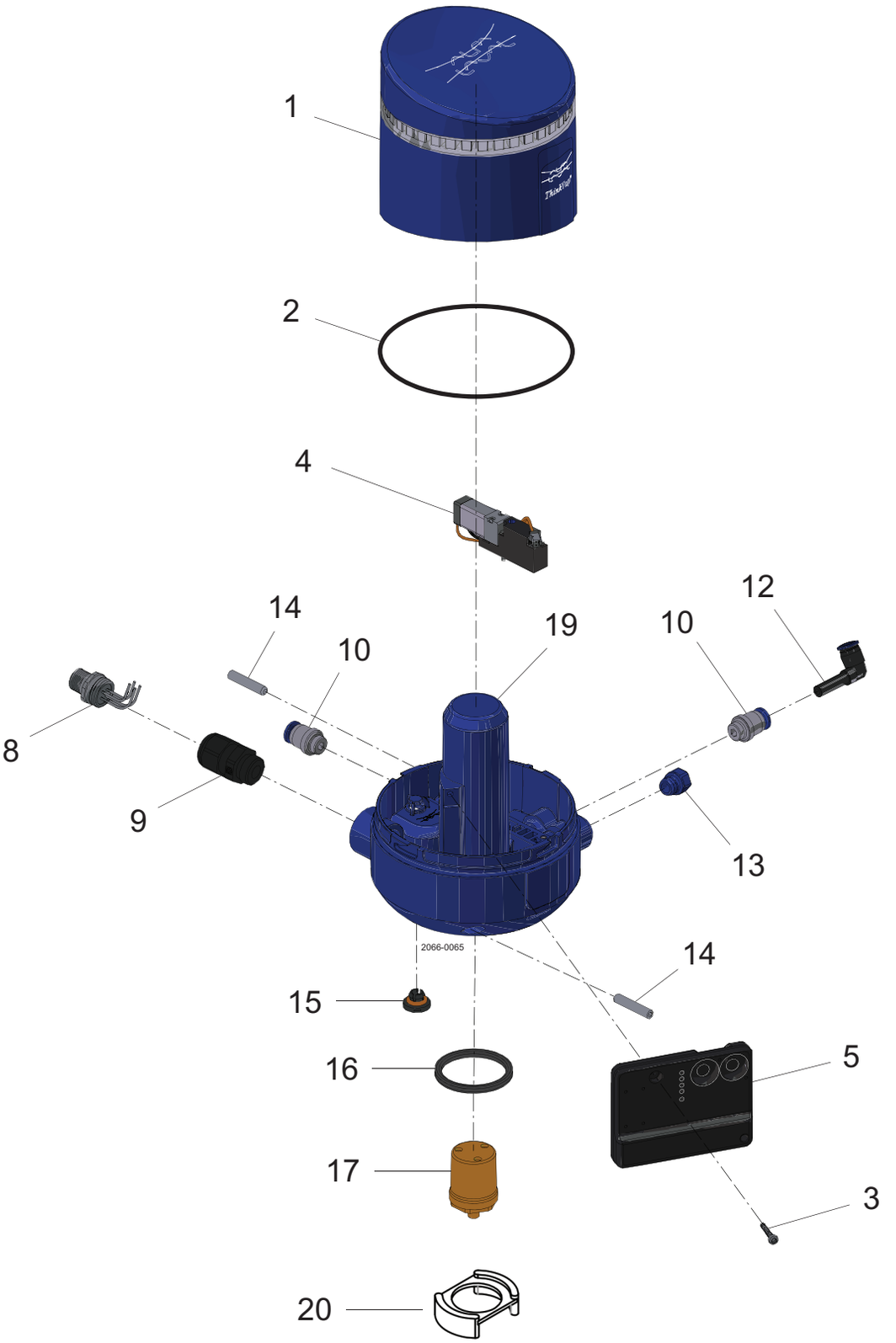
1
2
4
14
10
19
10
12
8
9
13
2066-0065
14
15
16
5
17
3
20

Pos	Qty	Denomination	
ThinkTop V50 Part Number			
1	1	Cover	9615376201
2	1	V-ring	9615451401
3	1	Screw	9611996072
4	1	Solenoid valve 1x3/2	9615395701
5	1	Control board, 24V Digital	9615394901
	1	Control board, AS-I 2.11 (31 node)	9615395001
	1	Control board, AS-I 3.0 (62 node)	9615395101
	1	Control board, IO-Link	9615395201
6	1	Spacer	
7	4	Base screw	
8	1	M12 plug, 4 pins	
	1	M12 plug, 8 pins	
9	1	Cable gland, Main entry, Ø4-10mm	9611996063
9.1	1	Cable gland, Main entry, AS-I, Ø3,5-7mm	9611996066
10	2	Air fitting, straight, Ø6mm	9611996073
	2	Air fitting, straight, 1/4"	9611996074
11	3	Blind plug air	
12	1	Air fitting, elbow, Ø6mm	9611996075
	1	Air fitting, elbow, 1/4"	9611996076
13	1	Exhaust plug	9615389001
14	2	Set screw	9611996070
15	1	Gore vent	9611996065
16	1	X-ring	9612569601
17	1	Sensor target	9615396701
19	1	Base	
20	1	Test spacer	9634098301

If the actuator is marked with a danger warning do NOT attempt to cut the actuator open.



Do NOT attempt to disassemble the actuator due to spring under load danger!



Do NOT attempt to cut the actuator open, due to spring under load danger!

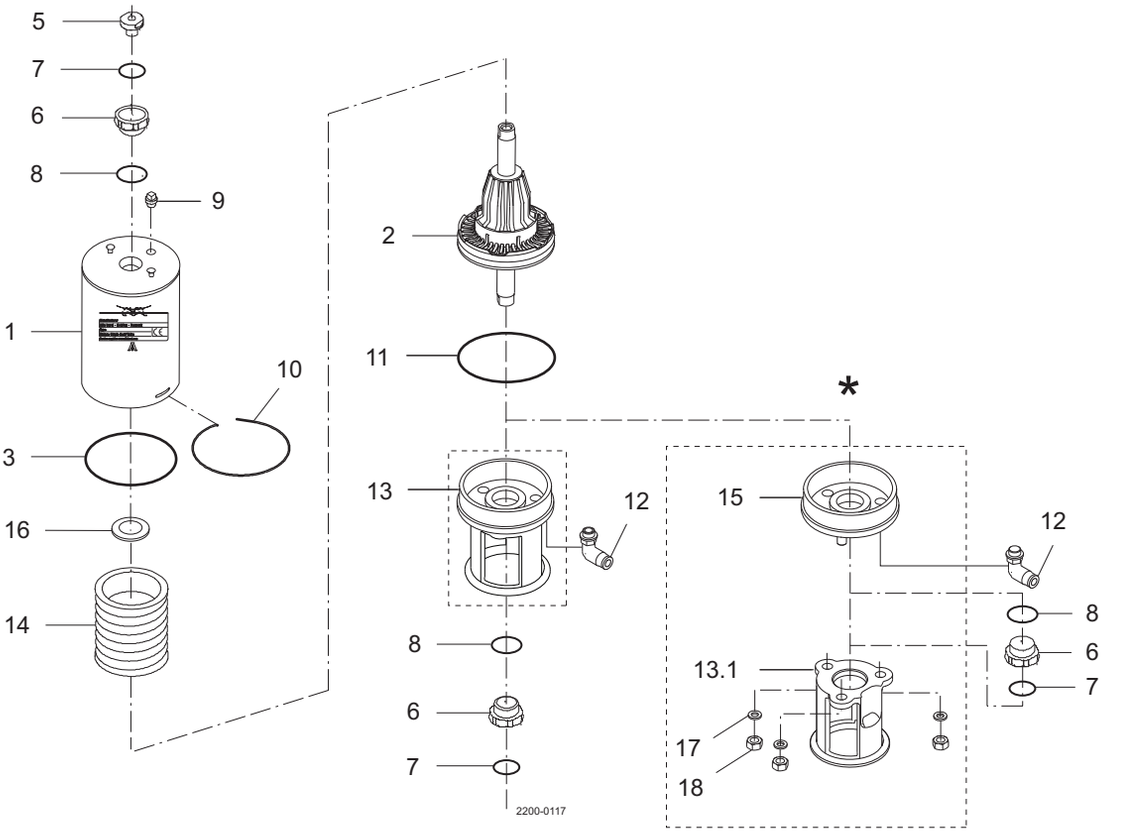

*) “Removable yoke with bolts” version, produced from 2006 to June 2016.
Replaced by “yoke without bolts” (13)

Pos		Qty	Denomination	DN 25 25 mm	DN 40 38 mm	DN 50 51 mm	DN 65 63.5 mm	DN 80 76.1 mm	DN 100 101.6 mm
			Actuator, complete (NO)	9613185301	9613185301	9613185302	9613185303	9613185304	9613185305
			Actuator, complete (NC)	9613185306	9613185306	9613185307	9613185308	9613185309	9613185310
			Actuator, complete (A/A)	9613185311	9613185311	9613185312	9613185313	9613185314	9613185315
1		1	Cylinder, (blasted)	9613142511	9613142511	9613142512	9613142512	9613142513	9613142513
		1	Cylinder, (polished)	9613142514	9613142514	9613142515	9613142515	9613142516	9613142516
2		1	Piston	9613132201	9613132201	9613132301	9613132301	9613132401	9613132401
3	□♦	1	O-ring						
5		1	Adapter, plastic (- 0115)						
		1	Adapter, steel (0115 - 0518)						
		1	Adapter, steel (0518 -)	9615374701	9615374701	9615374701	9615374701	9615374701	9615374701
6	□♦	2	Bushing						
7	□♦	2	O-ring						
8	□♦	2	O-ring						
9		1	Plug	9613414101	9613414101	9613414101	9613414101	9613414101	9613414101
10		1	Lock wire	9613143201	9613143201	9613143202	9613143202	9613143203	9613143203
11	□♦	1	O-ring						
12		1(2)	Air fitting (only 2 for A/A)	9611991988	9611991988	9611991988	9611991988	9611991988	9611991988
13		1	Yoke without bolts, (0616 ->)	9613154301	9613154301	9613154402	9613154502	9613154603	9613154703
14		1	Spring assembly	9613132501	9613132501	9613132502	9613132502	9613132503	9613132503
16	□♦	1(2)	Support disc (only 2 for A/A)						

Removable yoke with bolts (obsolete) - use position 13

13.1		1	Yoke (-> 0616)
15		1	Bottom (-> 0616)
17		3	Washer (-> 0616)
18		3	Nut (-> 0616)

		DN 25 25 mm	DN 40 38 mm	DN 50 51 mm	DN 65 63.5 mm	DN 80 76.1 mm	DN 100 101.6 mm
Service kits							
□	**Service kit, NO , NC**	**9611926497**	**9611926497**	**9611926498**	**9611926498**	**9611926499**	**9611926499**
♦	**Service kit, A/A**	**9611926519**	**9611926519**	**9611926520**	**9611926520**	**9611926521**	**9611926521**

Parts marked with □♦ are included in the service kits.
Recommended spare parts: Service kits.

TD900361/3

If the actuator is marked with a danger warning do NOT attempt to cut the actuator open.



Do NOT attempt to disassemble the actuator due to spring under load danger.



Do NOT attempt to cut the actuator open, due to spring under load danger.

AND



Do NOT attempt to cut the actuator open, due to spring under load danger.

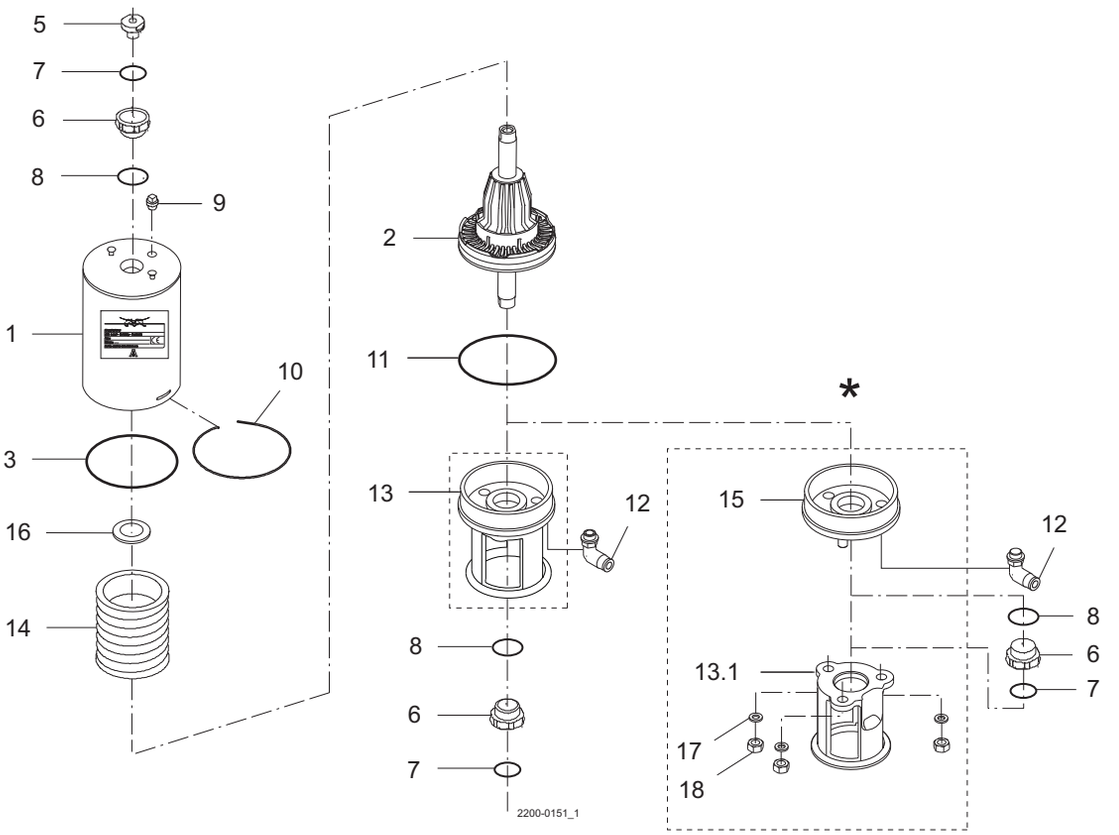

*) Removal yoke with bolts version, produced from 2006 to June 2016.
Phased out with yoke without bolts (13)

Pos		Qty	Denomination	1”	1½”	2”	2½”	3”	4”
			Actuator, complete (NO)	9613185346	9613185346	9613185347	9613185348	9613185349	9613185350
			Actuator, complete (NC)	9613185321	9613185321	9613185322	9613185353	9613185354	9613185325
			Actuator, complete (A/A)	9613185326	9613185326	9613185327	9613185328	9613185329	9613185330
1		1	Cylinder, blasted	9613142517	9613142517	9613142518	9613142518	9613142519	9613142519
		1	Cylinder, polished	9613142520	9613142520	9613142521	9613142521	9613142522	9613142522
2		1	Piston	9613132201	9613132201	9613132301	9613132301	9613132401	9613132401
3	■●	1	O-ring						
5		1	Adapter, plastic (- 0115)						
		1	Adapter, steel (0115 - 0518)						
		1	Adapter, steel (0518 -)	9615374701	9615374701	9615374701	9615374701	9615374701	9615374701
6	■●	2	Bushing						
7	■●	2	O-ring						
8	■●	2	O-ring						
9		1	Plug	9613414101	9613414101	9613414101	9613414101	9613414101	9613414101
10		1	Lock wire	9613143201	9613143201	9613143202	9613143202	9613143203	9613143203
11	■●	1	O-ring						
12		1/2	Air fitting (only 2 for A/A)	9611994682	9611994682	9611994682	9611994482	9611994682	9611994682
13		1	Yoke, without bolts	9613154301	9613154301	96131544402	9613154502	9613154603	9613154703
14		1	Spring assembly	9613132501	9613132501	9613132502	9613132502	9613132503	9613132503
16	■●	1/2	Support disc (only 2 for A/A)						

Removable yoke with bolts (obsolete) - use position 13

13.1	1	Yoke (-> 0616)	
15	1	Bottom (-> 0616)	
17	3	Washer (-> 0616)	
18	3	Nut (-> 0616)	

Service kits

		1”	1½”	2”	2½”	3”	4”
•	**Service kit, NO/NC**	**9611926497**	**9611926497**	**9611926498**	**9611926498**	**9611926499**	**9611926499**
■	**Service kit, A/A**	**9611926519**	**9611926519**	**9611926520**	**9611926520**	**9611926521**	**9611926521**

Recommended spare parts: Service kits.
Parts marked with ■● are included in the service kits.

TD 900-362/2

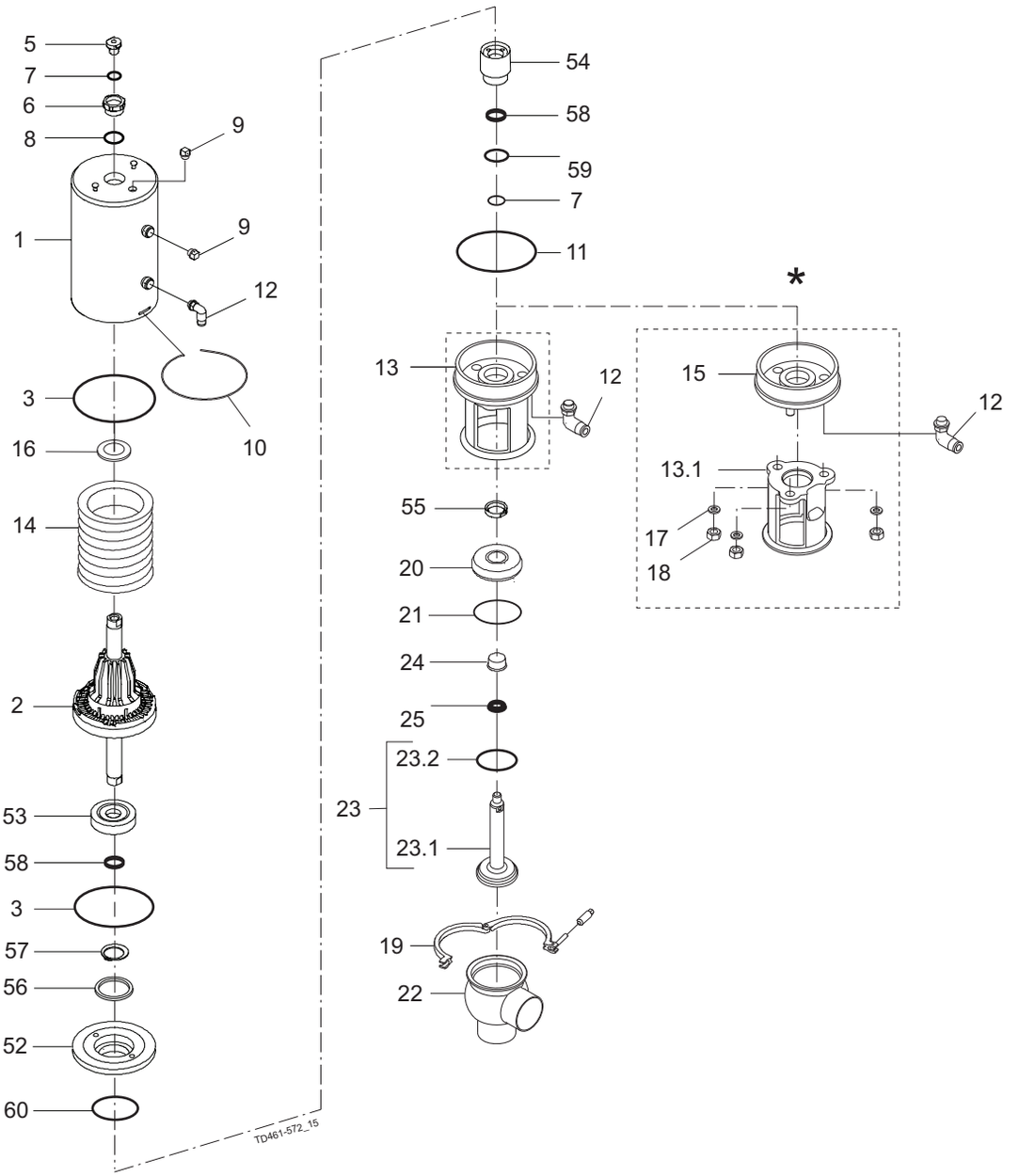

*) "Remove yoke with bolts" version, produced from 2006 to June 2016.
Replaced by "yoke without bolts" (13)

Pos		Qty	Denomination	DN 40 38 mm	DN 50 51 mm	DN 65 63.5 mm	DN 80 76 mm	DN 100 101.6 mm
			Actuator, complete (NC) shut-off valve	9613185401	9613185402	9613185403	9613185404	9613185405
			Actuator, complete (NO) change-over valve	9613185429	9613185430	9613185431	9613185432	9613185433
			Actuator, complete (NC) change-over valve	9613185419	9613185420	9613185421	9613185422	9613185423
1		1	Cylinder				9613167706	9613167706
2		1	Piston	9613132304	9613132304	9613132304	9613132405	9613132405
3	□	2	O-ring					
5		1	Adapter, plastic (- 0115)					
		1	Adapter, steel (0115 - 0518)					
		1	Adapter, steel (0518 -)	9615374701	9615374701	9615374701	9615374701	9615374701
6	□	1	Bushing					
7	□	2	O-ring					
8	□	1	O-ring					
9		2	Plug	9613414101	9613414101	9613414101	9613414101	9613414101
10		1	Lock wire	9613143202	9613143202	9613143202	9613143203	9613143203
11	□	1	O-ring					
12		2	Air fitting	9611991988	9611991988	9611991988	9611991988	9611991988
13		1	Yoke without bolts (0616 -)	9615245401	9613154402	9613154502	9613154603	9613154703
14		1	Spring assembly	9613132502	9613132502	9613132502	9613132503	9613132503
16	□	1	Support disc					
52		1	Piston	9613167801	9613167801	9613167801	9613167901	9613167901
53		1	Thrust plate	9613168201	9613168201	9613168201	9613168201	9613168201
54		1	Guide	9613168001	9613168001	9613168001	9613168101	9613168101
55		1	Nut	9613168301	9613168301	9613168301	9613168301	9613168301
56		2	Spacer, (only for shut-off valve)	9613168402				
		3	Spacer, (only for shut-off valve)		9613168402	9613168402	9613168402	9613168402
		1	Spacer, (only for shut-off valve)		9613168401	9613168401		
		2	Spacer, (only for shut-off valve)				9613168401	9613168401
57		1	Lock ring	51997509	51997509	51997509	51997509	51997509
58		2	Guide ring	9613008424	9613008424	9613008424	9613008424	9613008424
59	□	1	O-ring					
60	□	1	O-ring					

Removeable yoke with bolts - OBSOLETE

use position 13

13.1		1	Yoke (- 0616)					
15		1	Bottom (- 0616)					
17		3	Washer (- 0616)					
18		3	Nut (- 0616)					

If the actuator is marked with a danger warning do NOT attempt to cut the actuator open.



Do NOT attempt to disassemble the actuator due to spring under load danger!



Do NOT attempt to cut the actuator open, due to spring under load danger!

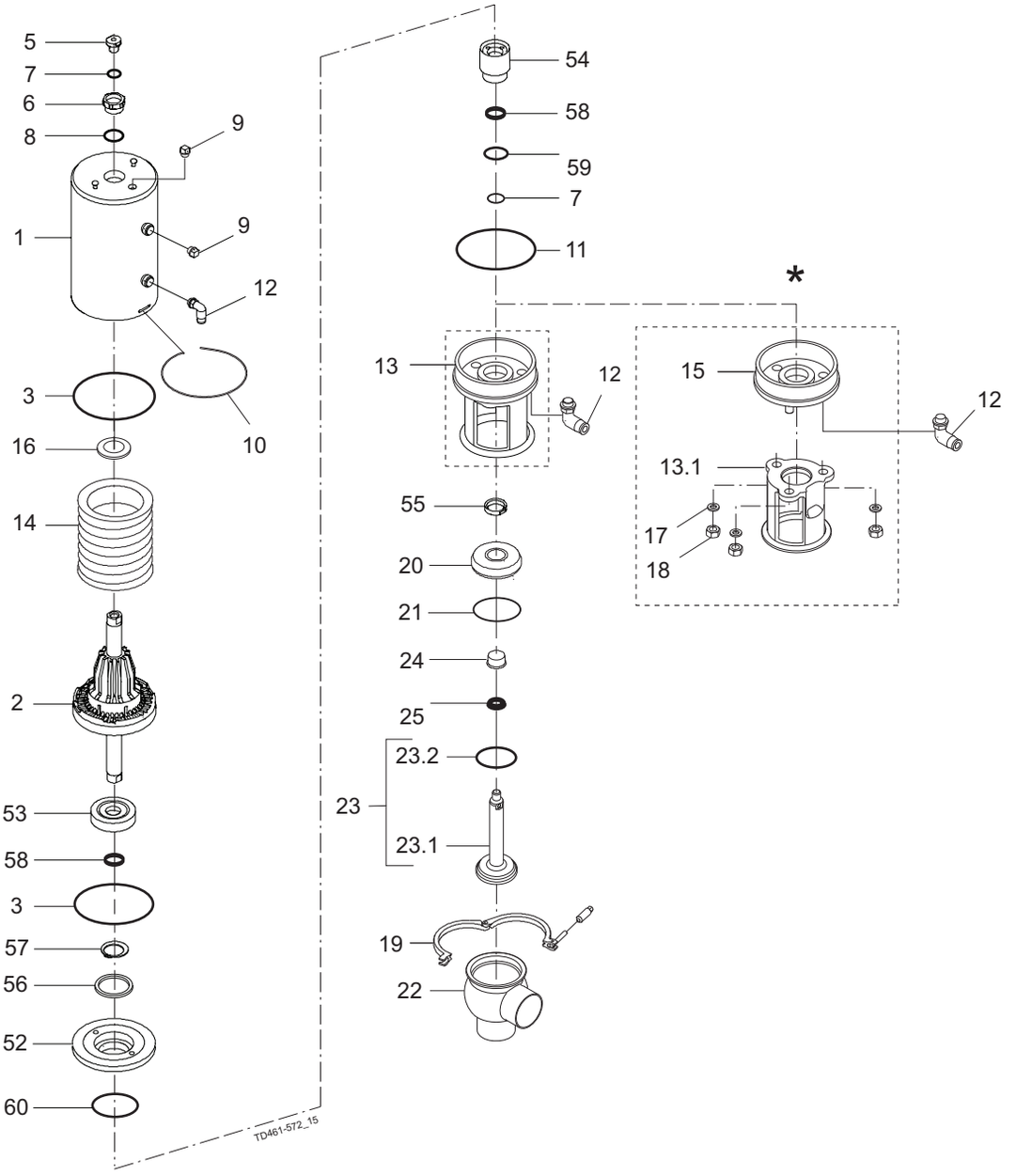

*) “Remove yoke with bolts” version, produced from 2006 to June 2016.
Replaced by “yoke without bolts” (13)

Pos	Qty	Denomination	DN 40 38 mm	DN 50 51 mm	DN 65 63.5 mm	DN 80 76 mm	DN 100 101.6 mm
Clamp							
19	1	Clamp	9612939303	9612939304	9612939305	9612939306	9612939307
Bonnet							
20	1	Bonnet	9613127102	9613127103	9613127104	9613127105	9613127106
21 ♦	1	O-ring, EPDM (standard)					
	1	O-ring, HNBR					
	1	O-ring, FPM					
	1	O-ring, set (10 pcs.) EPDM	9614059422	9614059425	9614059428	9614059431	9614059434
	1	O-ring , set (10 pcs.) HNBR	9614059423	9614059426	9614059429	9614059432	9614059435
	1	O-ring, set (10 pcs.) FPM	9614059424	9614059427	9614059430	9614059433	9614059436
24	1	Bushing	9613125002	9613125002	9613125002	9613125002	9613125002
25 ♦	1	Lip seal , EPDM (standard)					
	1	Lip seal , HNBR					
	1	Lip seal, FPM					
	1	Lip seal, set (10 pcs.) EPDM	9614059419	9614059419	9614059419	9614059419	9614059419
	1	Lip seal, set (10 pcs.) HNBR	9614059420	9614059420	9614059420	9614059420	9614059420
	1	Lip seal, set (10 pcs.) FPM	9614059421	9614059421	9614059421	9614059421	9614059421
Valve body							
22	1	Valve body, lower, 2 ports ISO	9613139503	9613139505	9613139507	9613139509	9613139511
	1	Valve body, lower, 3 ports ISO	9613139504	9613139506	9613139508	9613139510	9613139512
	1	Valve body, lower, 2 ports DIN	9613139603	9613139605	9613139607	9613139609	9613139611
	1	Valve body, lower, 3 ports DIN	9613139604	9613139606	9613139608	9613139610	9613139612
Valve plug							
23	1	Plug, shut off, ISO, complete, EPDM (standard)	9613138802	9613138803	9613138804	9613138805	9613138806
	1	Plug, shut off, ISO, complete, HNBR	9613138814	9613138815	9613138816	9613138817	9613138818
	1	Plug, shut off, ISO, complete, FPM	9613138826	9613138827	9613138828	9613138829	9613138830
	1	Plug, shut off, DIN, complete, EPDM (standard)	9613138808	9613138809	9613138810	9613138811	9613138812
	1	Plug, shut off, DIN, complete, HNBR	9613138820	9613138821	9613138822	9613138823	9613138824
	1	Plug, shut off, DIN, complete, FPM	9613138832	9613138833	9613138834	9613138835	9613138836
23.1	1	Plug, shut off, ISO	9613139802	9613139803	9613139804	9613139805	9613139806
	1	Plug, shut off , DIN	9613139808	9613139809	9613139810	9613139811	9613139812
23.2♦	1	Plug seal, EPDM (standard)					
	1	Plug seal , HNBR					
	1	Plug seal , FPM					
	1	Plug seal, set (10 pcs.) EPDM	9614059404	9614059407	9614059410	9614059413	9614059416
	1	Plug seal, set (10 pcs.) HNBR	9614059405	9614059408	9614059411	9614059414	9614059417
	1	Plug seal , set (10 pcs.) FPM	9614059406	9614059409	9614059412	9614059415	9614059418

	DN 40 38 mm	DN 50 51 mm	DN 65 63.5 mm	DN 80 76 mm	DN 100 101.6 mm
Service kits for actuator					
□ Service kit, actuator	9611926738	9611926738	9611926738	9611926739	9611926739
Service kit for product wetted parts					
Service kit, EPDM	9611926502	9611926503	9611926504	9611926505	9611926506
Service kit, HNBR	9611926508	9611926509	9611926510	9611926511	9611926512
Service kit, FPM	9611926514	9611926515	9611926516	9611926517	9611926518

Parts marked with □ are included in the service kits (actuator)

Parts marked with ♦ are included in the service kits (product wetted parts)

Tool for bushing (pos. 24) 9613160901

TD900-467/5

If the actuator is marked with a danger warning do NOT attempt to cut the actuator open.



Do NOT attempt to disassemble the actuator due to spring under load danger!



Do NOT attempt to cut the actuator open, due to spring under load danger!

AND



Do NOT attempt to cut the actuator open due to spring under load danger.

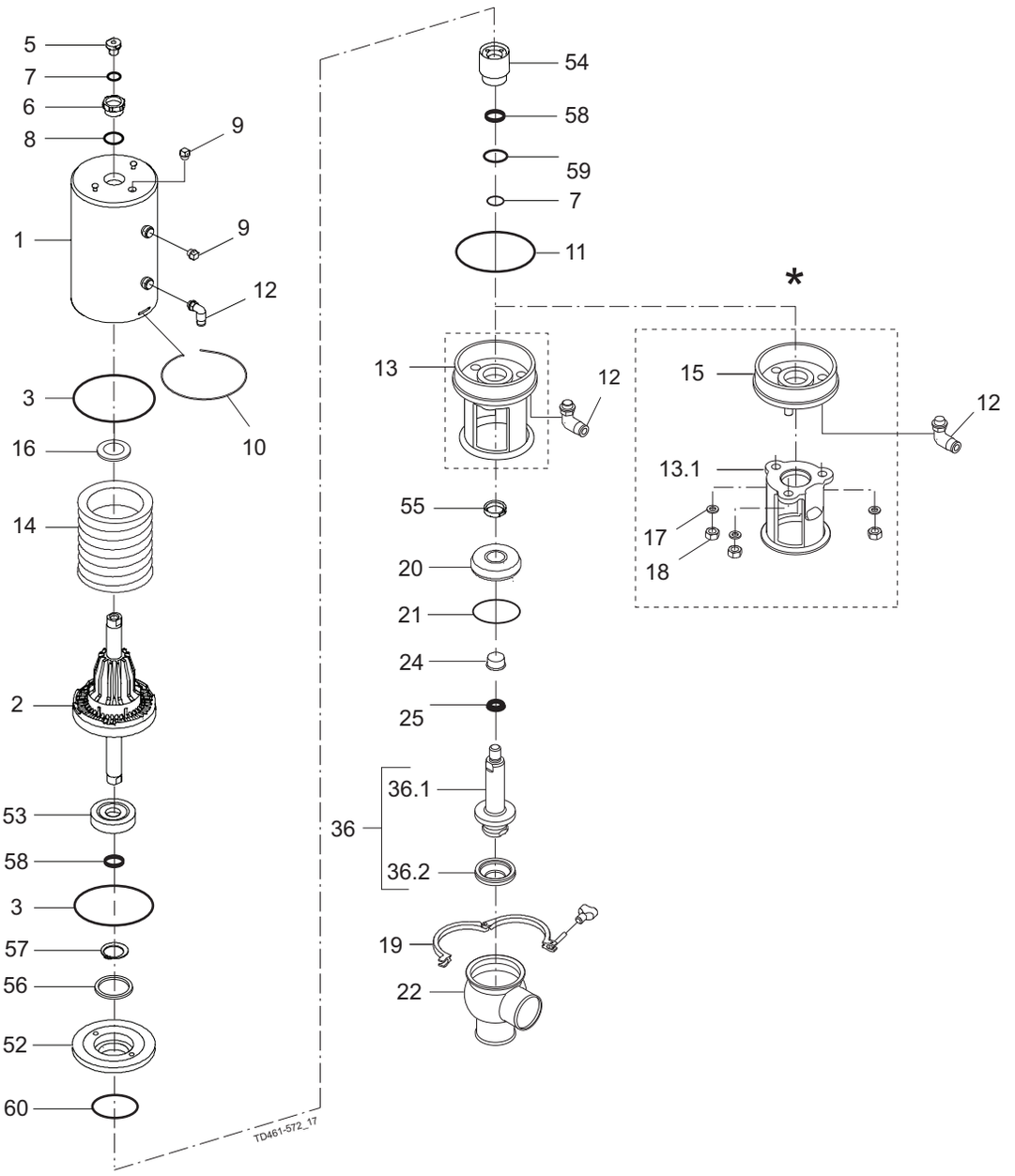

*) "Remove yoke with bolts" version, produced from 2006 to June 2016.
Replaced by "yoke without bolts" (13)

Pos		Qty	Denomination	1½”	2”	2½”	3”	4”
			Actuator, complete blasted (NC) Shut Off	9613185910	9613185911	9613185912	9613185913	9613185914
			Actuator, complete polished (NC) Shut Off	9613185910	9613185911	9613185912	9613185913	9613185914
1		1	Cylinder, (blasted)	9613167709	9613167709	9613167709	9613167710	9613167711
		1	Cylinder, (polished)	9613167711	9613167711	9613167711	9613167712	9613167712
2		1	Piston	9613132304	9613132304	9613132304	9613132405	9613132405
3	•	2	O-ring					
5		1	Adapter, plastic (- 0115)					
		1	Adapter, steel (0115 - 0518)					
		1	Adapter, steel (0518 -)	9615374701	9615374701	9615374701	9615374701	9615374701
6	•	1	Bushing					
7	•	2	O-ring					
8	•	1	O-ring					
9		2	Plug	9613414101	9613414101	9613414101	9613414101	9613414101
10		1	Lock wire	9613143202	9613143202	9613143202	9613143203	9613143203
11	•	1	O-ring					
12		2	Air fitting	9611994682	9611994682	9611994482	9611994682	9611994682
13		1	Yoke	9615245401	9613154402	9613154502	9613154603	9613154703
14		1	Spring assembly	9613132502	9613132502	9613132502	9613132503	9613132503
16	•	1	Support disc					
52		1	Piston	9613167801	9613167801	9613167801	9613167901	9613167901
53		1	Thrust plate	9613168201	9613168201	9613168201	9613168201	9613168201
54		1	Guide	9613168001	9613168001	9613168001	9613168101	9613168101
55		1	Nut	9613168301	9613168301	9613168301	9613168301	9613168301
56		2	Spacer, (only for shut-off valve)	9613168402				
		3	Spacer, (only for shut-off valve)		9613168402	9613168402	9613168402	9613168402
		1	Spacer, (only for shut-off valve)		9613168401	9613168401		
		2	Spacer, (only for shut-off valve)				9613168401	9613168401
		1	Spacer, (only for NO change-over valve)				9613168401	9613168401
57		1	Lock ring	51997509	51997509	51997509	51997509	51997509
58		2	Guide ring	9613008424	9613008424	9613008424	9613008424	9613008424
59	•	1	O-ring					
60	•	1	O-ring					

Removeable yoke with bolts - OBSOLETE

use position 13

13.1		1	Yoke , (- 0616)					
15		1	Bottom (- 0616)					
17		3	Washer (- 0616)					
18		3	Nut (- 0616)					

If the actuator is marked with a danger warning do NOT attempt to cut the actuator open.



Do NOT attempt to disassemble the actuator due to spring under load danger!



Do NOT attempt to cut the actuator open, due to spring under load danger!

AND



Do NOT attempt to cut the actuator open due to spring under load danger.

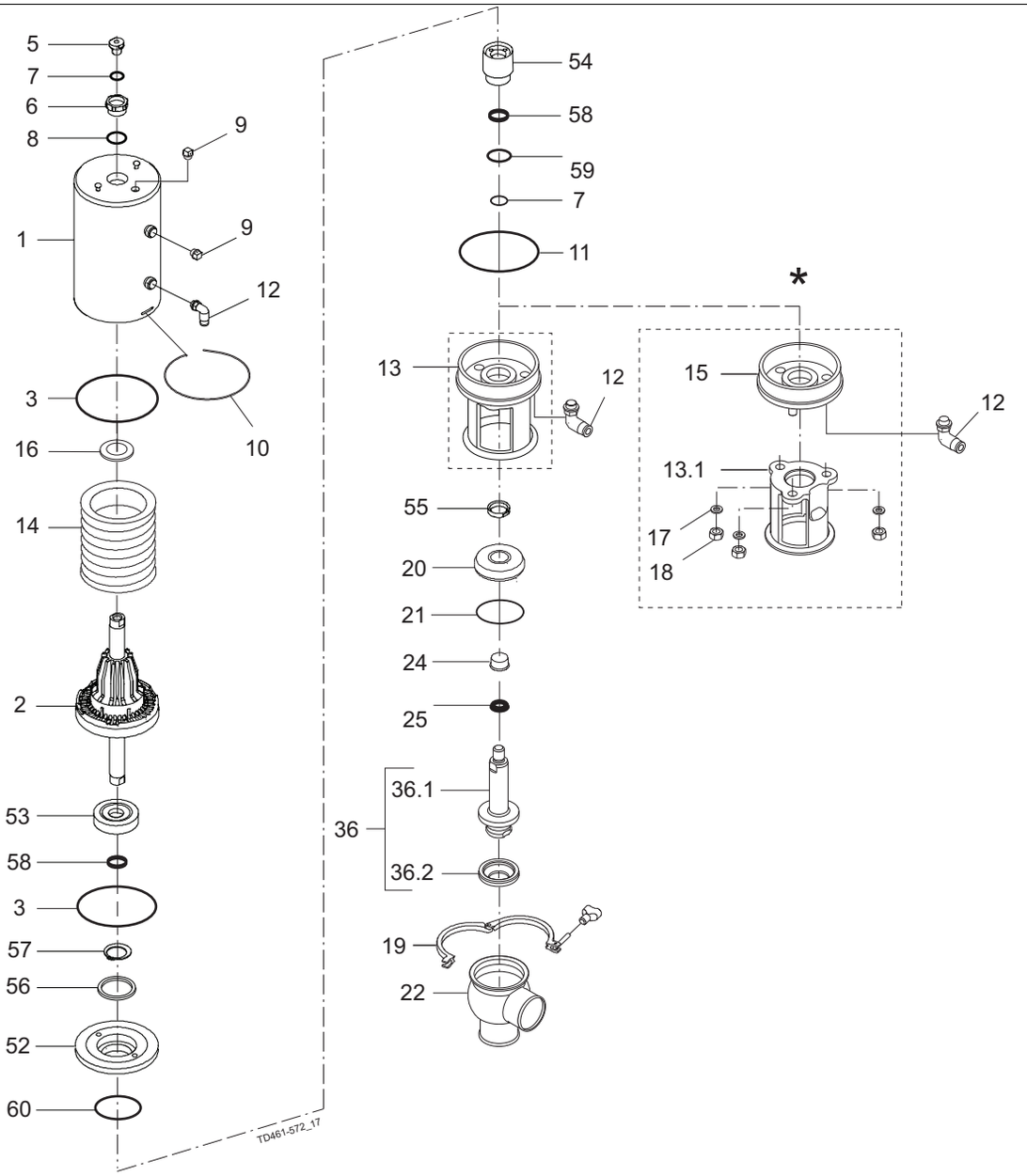

*) “Remove yoke with bolts” version, produced from 2006 to June 2016.
Replaced by “yoke without bolts” (13)

Pos		Qty	Denomination	1½"	2"	2½"	3"	4"
Clamp								
19		1	Clamp	9612939316	9612939317	9612939318	9612939319	9612939320
Bonnet								
20		1	Bonnet	9613127102	9613127103	9613127104	9613127105	9613127106
21	♦	1	O-ring, EPDM (standard)					
		1	O-ring, HNBR					
		1	O-ring, FPM					
			O-ring, , set (10 pcs.) EPDM	9614059422	9614059425	9614059428	9614059431	9614059434
			O-ring, , set (10 pcs.) HNBR	9614059423	9614059426	9614059429	9614059432	9614059435
			O-ring, , set (10 pcs.) FPM	9614059424	9614059427	9614059430	9614059433	9614059436
24		1	Bushing	9613125002	9613125002	9613125002	9613125002	9613125002
25	♦	1	Lip seal, , EPDM (standard)					
		1	Lip seal, , HNBR					
		1	Lip seal, , FPM					
		1	Lip seal, , set (10 pcs.) EPDM	9614059419	9614059419	9614059419	9614059419	9614059419
		1	Lip seal, , set (10 pcs.) HNBR	9614059420	9614059420	9614059420	9614059420	9614059420
		1	Lip seal, , set (10 pcs.) FPM	9614059421	9614059421	9614059421	9614059421	9614059421
Valve Body								
22		1	Valve body, , lower, 2 ports , clamp	9613161603	9613161605	9613161607	9613161609	9613161611
		1	Valve body, , lower, 3 ports, clamp	9613161604	9613161606	9613161608	9613161610	9613161612
		1	Valve body, , lower 2 ports , welding ends	9613139515	9613139517	9613139519	9613139521	9613139523
		1	Valve body, , lower 3 ports , welding ends	9613139516	9613139518	9613139520	9613139522	9613139524
Valve Plug								
36		1	Plug, shut off, complete	9613155802	9613155803	9613155804	9613155805	9613155806
36.1		1	Plug, shut off.	9613151101	9613151102	9613151103	9613151104	9613151105
36.2	♦	1	Plug seal, PTFE					
			Plug seal, , set (10 pcs.) PTFE	9614059449	9614059450	9614059451	9614059452	9614059453

		1½"	2"	2½"	3"	4"
Service kits for actuator						
■	Service kit, actuator	9611926738	9611926738	9611926738	9611926739	9611926739
Servicekits for product wetted parts						
♦	Servicekits, EPDM	9611926561	9611926562	9611926563	9611926564	9611926565
♦	Servicekits, HNBR	9611926566	9611926567	9611926568	9611926569	9611926570
♦	Servicekits, FPM	9611926571	9611926572	9611926573	9611926574	9611926575

Parts marked with ♦● are included in the service kits (actuator)
Recommended spare parts: Service kits

TD900468/3

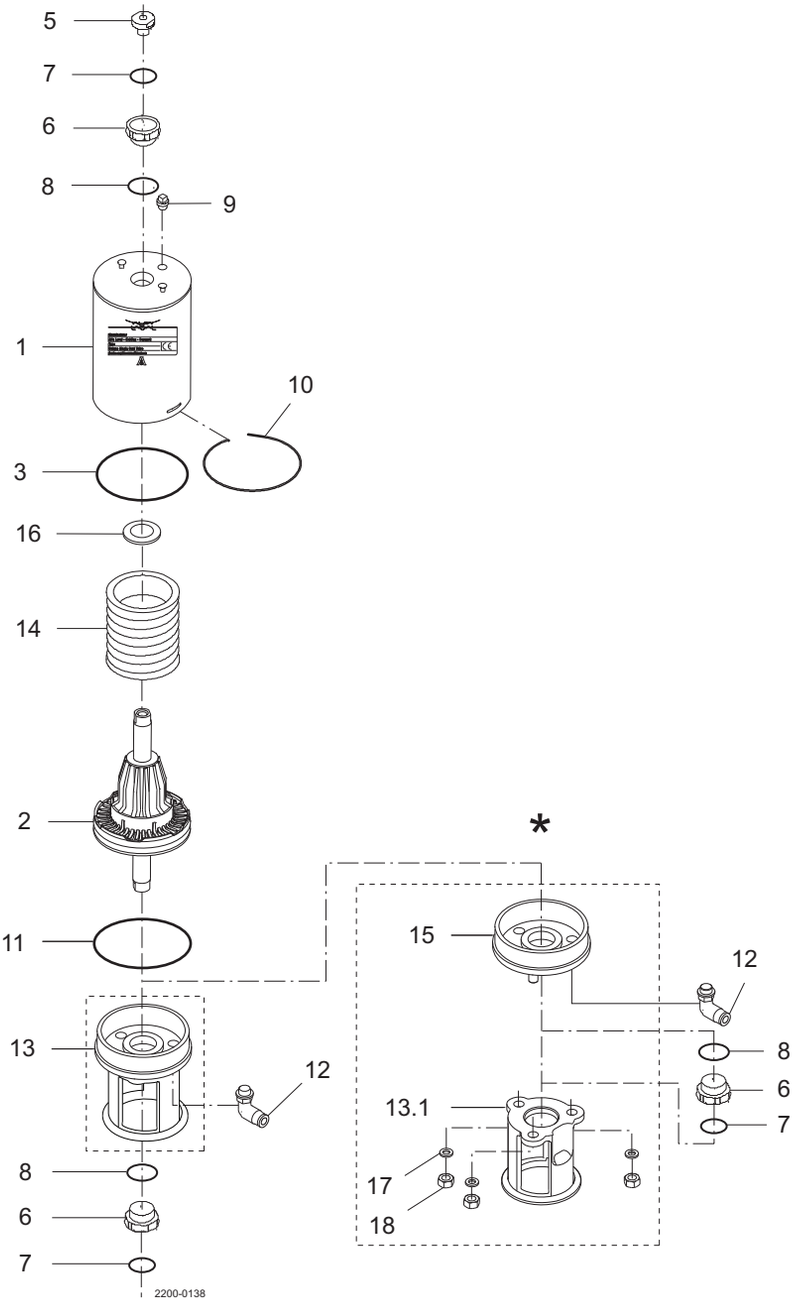

*) “Removable yoke with bolts” version, produced from 2006-June 2016.
Replaced by “yoke without bolts” (13)

Pos		Qty	Denomination	DN 25 25 mm	DN 40 38 mm	DN 50 51 mm	DN 65 63.5 mm	DN 80 76.1 mm	DN 100 101.6 mm
			Actuator, complete, (NO)	9613185361	9613185361	9613185362	9613185363	9613185364	9613185365
			Actuator, complete, (NC)	9613185366	9613185366	9613185367	9613185368	9613185369	9613185370
1		1	Cylinder, (blasted)	9613142511	9613142511	9613142512	9613142512	9613142513	9613142513
		1	Cylinder, (polished)	9613142514	9613142514	9613142515	9613142515	9613142516	9613142516
2		1	Piston	9613132201	9613132201	9613132301	9613132301	9613132401	9613132401
3	□	1	O-ring						
5		1	Adapter, plastic (- 0115)						
		1	Adapter, steel (0115 -)	9614065301	9614065301	9614065301	9614065301	9614065301	9614065301
		1	Adapter, steel (0518 -)	9615374701	9615374701	9615374701	9615374701	9615374701	9615374701
6	□	2	Bushing						
7	□	2	O-ring						
8	□	2	O-ring						
9		1	Plug	9613414101	9613414101	9613414101	9613414101	9613414101	9613414101
10		1	Lock wire	9613143201	9613143201	9613143202	9613143202	9613143203	9613143203
11	□	1	O-ring						
12		1	Air fitting	9611991988	9611991988	9611991988	9611991988	9611991988	9611991988
13		1	Yoke	9613154301	9613154301	9613154402	9615245601	9613154603	9613154703
14		1	Spring assembly	9613132504	9613132504	9613132505	9613132505	9613132506	9613132506
16	□	1	Support disc						

Removeable yoke with bolts (obsolete) - use pos. 13

13.1		1	Yoke (-> 0616)						
15		1	Bottom (-> 0616)						
17		3	Washer (-> 0616)						
18		3	Nut (-> 0616)						

		DN 25 25 mm	DN 40 38 mm	DN 50 51 mm	DN 65 63.5 mm	DN 80 76.1 mm	DN 100 101.6 mm
Service kits							
□	**Service kit, NO , NC**	**9611926497**	**9611926497**	**9611926498**	**9611926499**	**9611926499**	**9611926499**

Parts marked with □ are included in the service kits

Recommended spare parts: Service kits.

TD900476/2

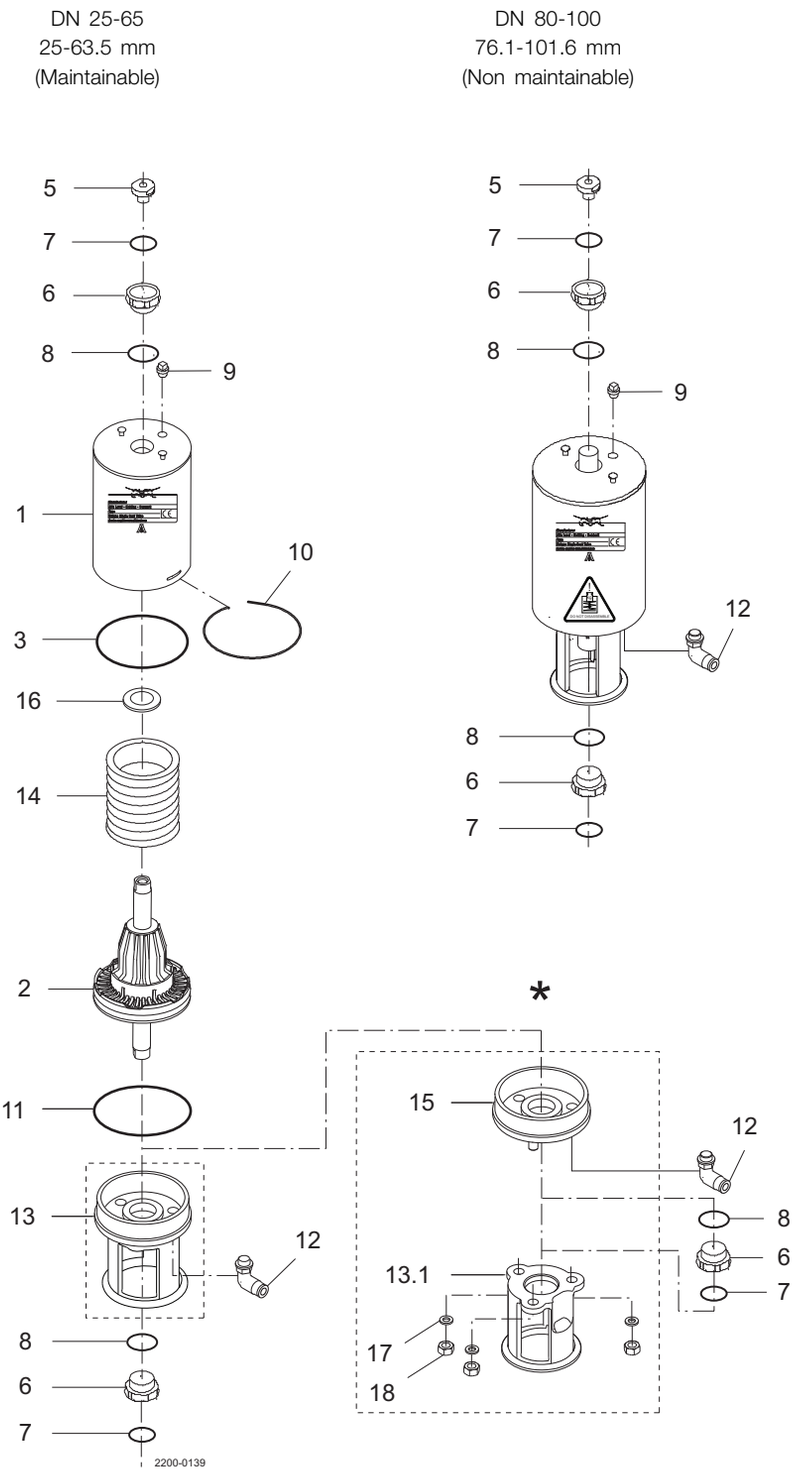

*) "Removable yoke with bolts" version, produced from 2006-June 2016.
Replaced by "yoke without bolts" (13)

Pos		Qty	Denomination	DN 25 25 mm (Maintainable)	DN 40 38 mm (Maintainable)	DN 50 51 mm (Maintainable)	DN 65 63.5 mm (Maintainable)	DN 80 76.1 mm (Non maintainable)	DN 100 101.6 mm (Non maintainable)
			Actuator, complete (NO)	9613185501	9613185501	9613185502	9613185503	N/A	N/A
			Actuator, complete (NC)	9613185504	9613185504	9613185505	9613185506	9613154863	9613154861
			Actuator, complete (A/A)	9613185507	9613185507	9613185508	9613185509	N/A	N/A
1		1	Cylinder	9613142512	9613142512	9613142513	9613142513		
2		1	Piston	9613132301	9613132301	9613132401	9613132401		
3	□♦	1	O-ring						
5		1	Adapter, plastic (- 0115)						
		1	Adapter, steel (0115 -)	9614065301	9614065301	9614065301	9614065301	9614065301	9614065301
		1	Adapter, steel (0518 -)	9615374701	9615374701	9615374701	9615374701	9615374701	9615374701
6	□♦○	2	Bushing						
7	□♦○	2	O-ring						
8	□♦○	2	O-ring						
9		1	Plug	9613414101	9613414101	9613414101	9613414101	9613414101	9613414101
10		1	Lock wire	9613143202	9613143202	9613143203	9613143203		
11	□♦	1	O-ring						
12		1(2)	Air fitting (only 2 for A/A)	9611991988	9611991988	9611991988	9611991988	9611991988	9611991988
13		1	Yoke	9615245401	9615245401	9615245501	9615245601		
14		1	Spring assembly	9613132502	9613132502	9613132503	9613132503		
16	□♦	1(2)	Support disc (only 2 for A/A)						

Removeable yoke with bolts (obsolete) - use position 13

13.1		1	Yoke (-> 0616)
15		1	Bottom (-> 0616)
17		3	Washer (-> 0616)
18		3	Nut (- >0616)

		DN 25 25 mm	DN 40 38 mm	DN 50 51 mm	DN 65 63.5 mm	DN 80 76.1 mm (Non maintainable)	DN 100 101.6 mm (Non maintainable)
Service kits							
□	**Service kit, NO , NC**	**9611926498**	**9611926498**	**9611926499**	**9611926499**		
♦	**Service kit, A/A**	**9611926520**	**9611926520**	**9611926521**	**9611926521**		
○	**Service kit, NC**					**9611926500**	**9611926500**

Parts marked with □♦○ are included in the service kits
Recommended spare parts: Service kits.

TD 900477/2

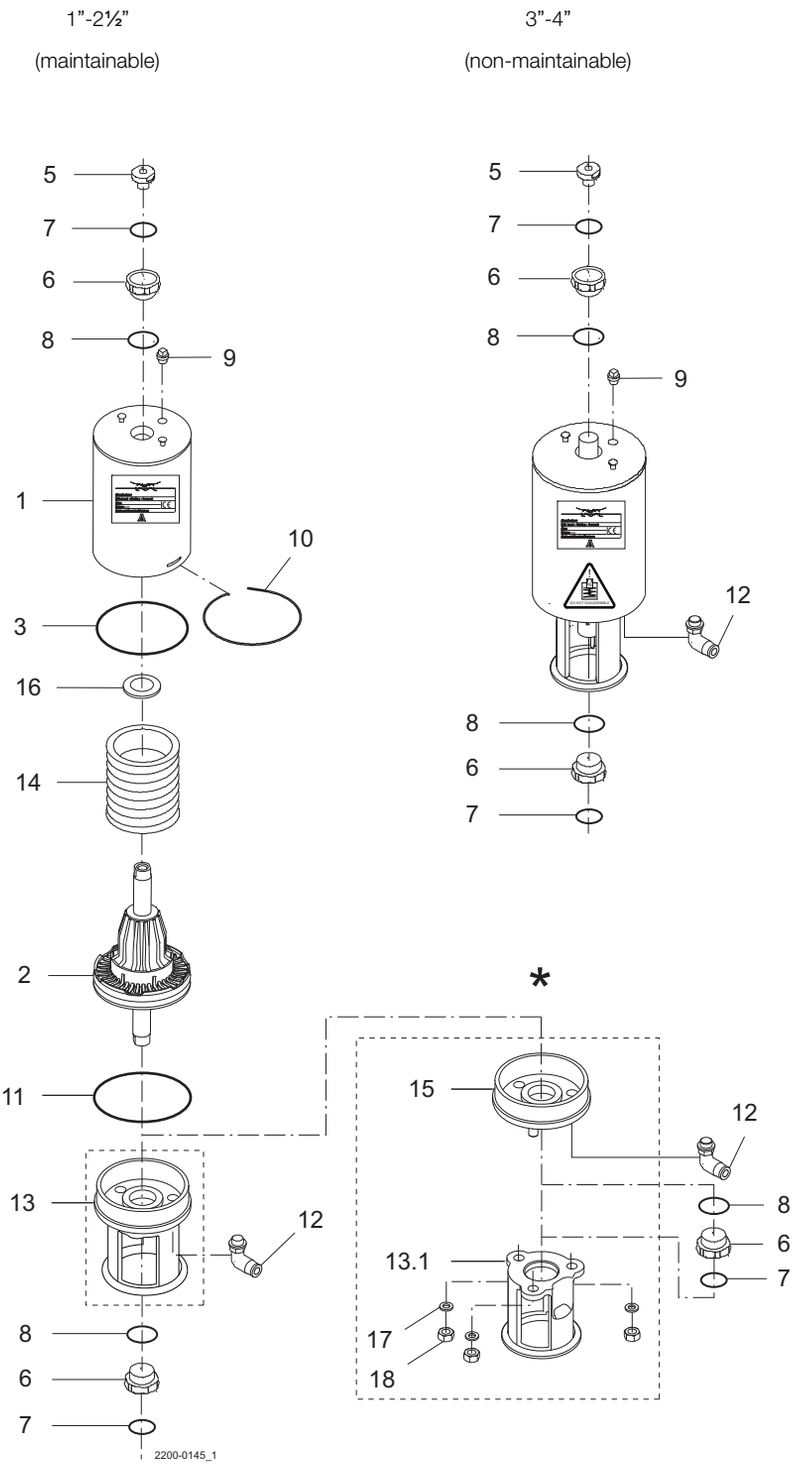

*) “Removable yoke with bolts” version, produced from 2006-June 2016.
Replaced by “yoke without bolts” (13)

Pos		Qty	Denomination	1"	1½"	2"	2½"	3" (Non maintainable)	4" (Non maintainable)
			Actuator, complete (NO) . .	9613185528	9613185528	9613185529	9613185512	N/A	N/A
			Actuator, complete (NC) . .	9613185531	9613185531	9613185532	9613185533	9613163164	9613163162
			Actuator, complete (A/A) . .	9613185507	9613185516	9613185517	9613185518	N/A	N/A
1		1	Cylinder, (blasted)	9613142518	9613142518	9613142519	9613142519		
		1	Cylinder, (polished)	9613142521	9613142521	9613142522	9613142522		
2		1	Piston	9613132301	9613132301	9613132401	9613132401		
3	□♦	1	O-ring	9611990033	9611990033	9611994283	9611994283		
5		1	Adapter, plastic (- 0115) . .						
		1	Adapter, steel (0115 - 0518)						
		1	Adapter, steel (0518 -) . . .	9615374701	9615374701	9615374701	9615374701	9615374701	9615374701
6	□♦○	2	Bushing						
7	□♦○	2	O-ring						
8	□♦○	2	O-ring						
9		1	Plug	9613414101	9613414101	9613414101	9613414101	9613414101	9613414101
10		1	Lock wire	9613143202	9613143202	9613143203	9613143203		
11	□♦	1	O-ring						
12		1(2)	Air fitting (only 2 for A/A) . .	9611994682	9611994682	9611994682	9611994682	9611994682	9611994682
13		1	Yoke without bolts (0616 -)	9615245401	9615245401	9615245501	9615245601		
14		1	Spring assembly	9613132502	9613132502	9613132503	9613132503		
16	□♦	1(2)	Support disc (only 2 for A/A)						
Removable yoke with bolts (obsolete) - use position 13									
13.1		1	Yoke (-> 0616)						
15		1	Bottom (-> 0616)						
17		3	Washer (-> 0616)						
18		3	Nut (-> 0616)						

		1"	1½"	2"	2½"	3" (Non maintainable)	4" (Non maintainable)
Service kits							
□	**Service kit, NO, NC . . . .**	**9611926498**	**9611926498**	**9611926499**	**9611926499**		
♦	**Service kit, A/A . . . . . .**	**9611926520**	**9611926520**	**9611926521**	**9611926521**		
○	**Service kit, NC . . . . . .**					**9611926500**	**9611926500**

Recommended spare parts: Service kits.
Parts marked with □♦○ are included in the service kits.

900-478/1

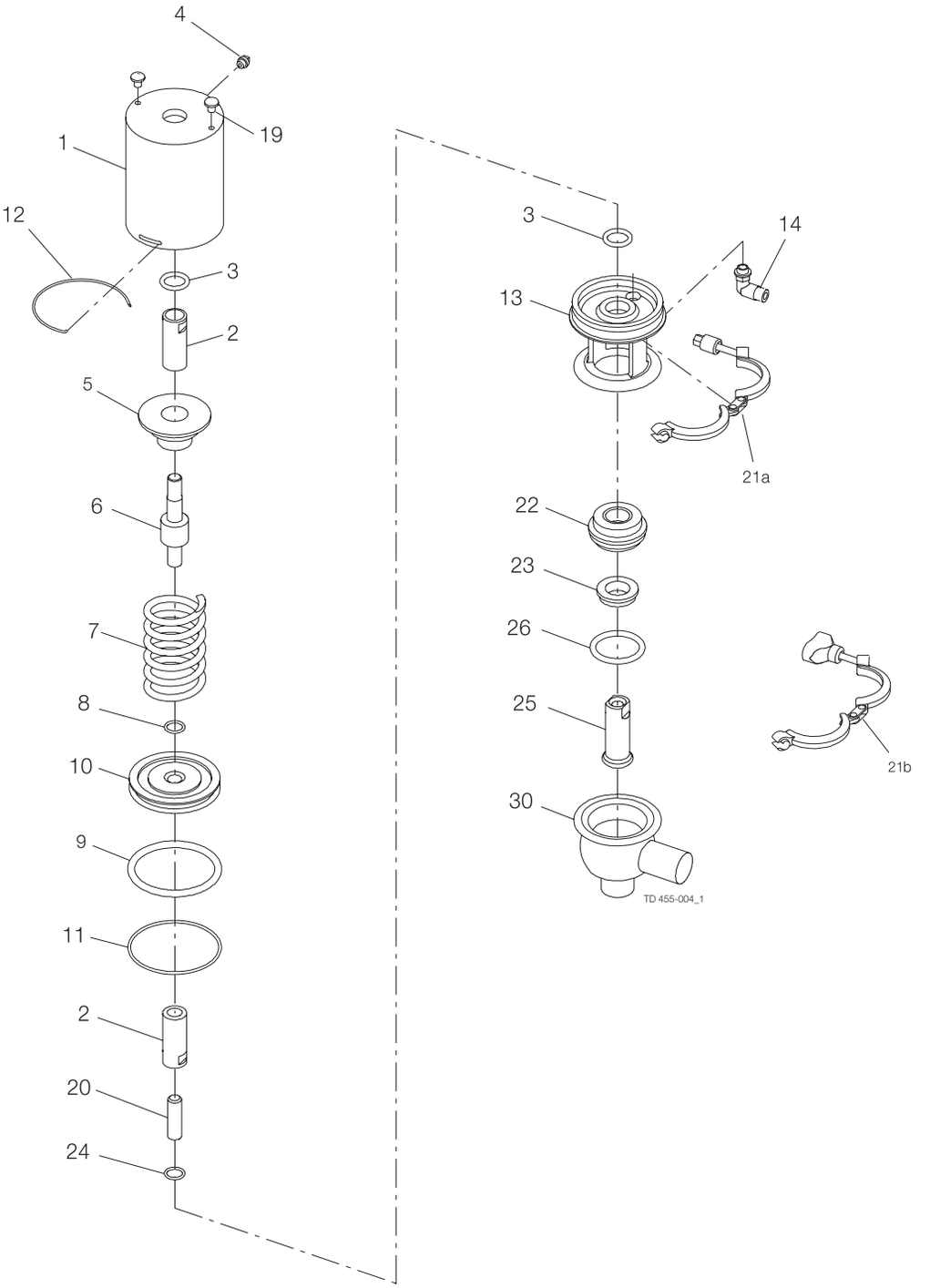
4
19
1
12
3
2
5
6
7
8
10
9
11
2
20
24
3
14
13
21a
22
23
26
25
30
21b
TD 455-004_1

Pos		Qty	Denomination	12.7 mm	19 mm
			Actuator, complete NC	9612940401	9612940402
			Piston/spring package, complete (pos. 2+5+6+7+8+10)	9612940424	9612940425
1		1	Cylinder	9612939602	9612939604
2		2	Middle piece		
			Please order a piston/spring package, cpl.		
3	□	2	O-ring, NBR		
4		1	Plug		
5		1	Guide pin		
			Please order a piston/spring package, cpl.		
6		1	Piston rod		
			Please order a piston/spring package, cpl.		
7		1	Spring		
			Please order a piston/spring package, cpl.		
8		1	O-ring, NBR		
			Please order a piston/spring package, cpl.		
9	□	1	O-ring, NBR		
10		1	Piston		
			Please order a piston/spring package, cpl.		
11	□	1	O-ring, NBR		
12		1	Lock wire	9612939401	9612939401
13		1	Bonnet	9612939002	9612939002
14		1	Air fitting	9611991988	9611991988
19		2	Screw	9611994401	9611994401
20		1	Threaded pin	9611994282	9611994282
21a		1	Clamp with hexnut	9612939301	9612939301
21b		1	Clamp with wingnut	9612939308	9612939308
22		1	Sealing element	9612939101	9612939101
23	◆	1	Lip seal, EPDM		
		1	Lip seal, HNBR		
		1	Lip seal, FPM		
24	◆	1	O-ring, NBR		
25	◆	1	Stop plug		
26	◆	1	O-ring, EPDM		
		1	O-ring, HNBR		
		1	O-ring, FPM		
30		1	Lower valve body, with welding ends, 2 ports	9612934417	9612934517
		1	Lower valve body, with welding ends, 3 ports	9612934418	9612934518
		1	Lower valve body, with clamp ends, 2 ports	9612934433	9612934533
		1	Lower valve body, with clamp ends, 3 ports	9612934434	9612934534

	12.7 mm	19 mm
Service kit for actuator		
□ Service kit, NBR	9611926323	9611926323
Service kits for product wetted parts, standard		
◆ Service kits, EPDM	9611926319	9611926330
◆ Service kits, HNBR	9611926317	9611926328
◆ Service kits, FPM	9611926318	9611926329

Parts marked with □◆ are included in the service kit.

Recommended spare parts: service kits.

TD 900218/1

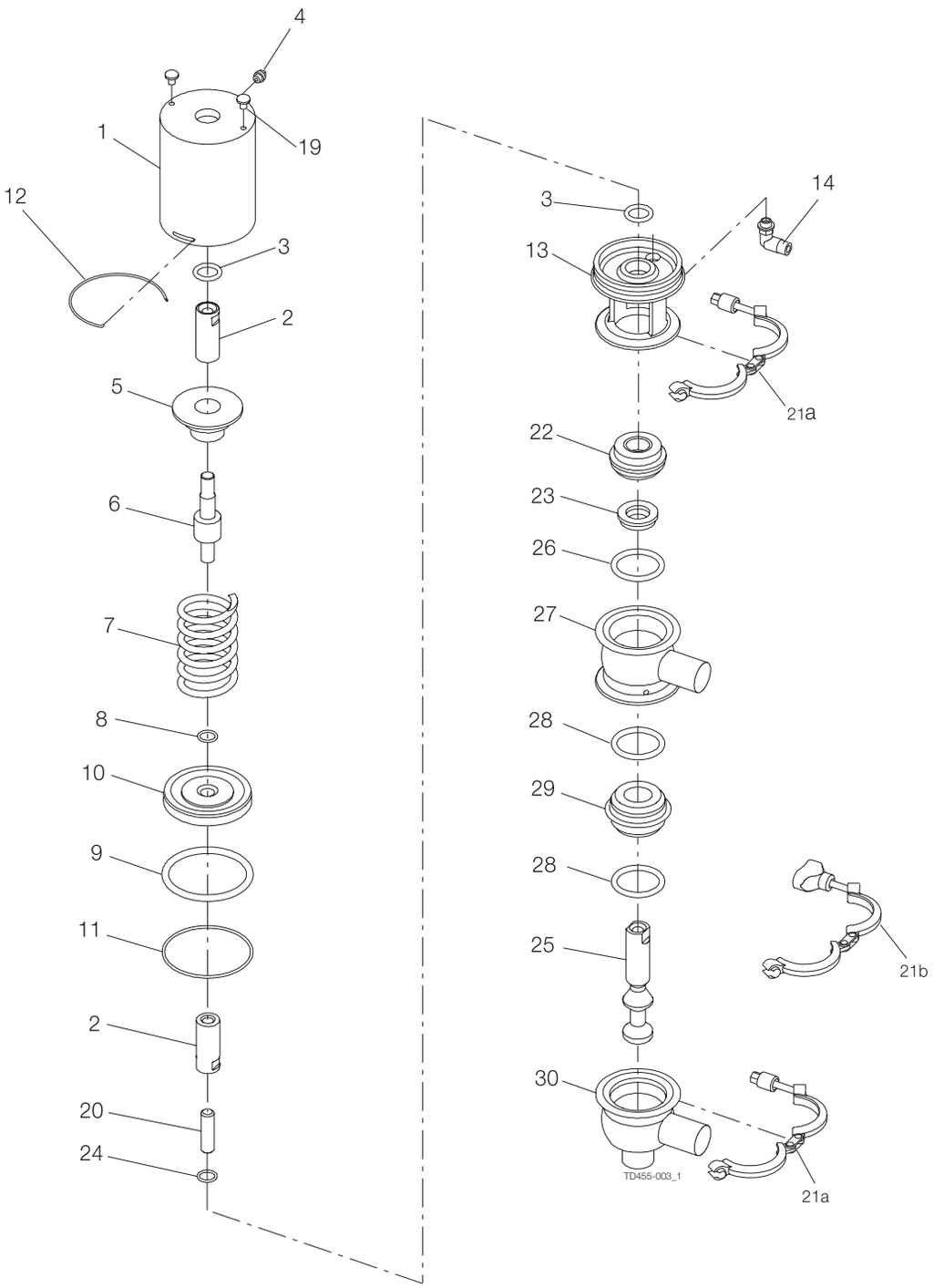
4
1
19
12
3
2
5
6
7
8
10
9
11
2
20
24
3
14
13
21a
22
23
26
27
28
29
28
25
21b
30
21a
TD455-003_1

Pos		Qty	Denomination	12.7 mm	19 mm
			Actuator, complete NC	9612940401	9612940402
			Piston/spring package, complete (pos. 2+5+6+7+8+10)	9612940424	9612940425
1		1	Cylinder	9612939602	9612939604
2		2	Middle piece		
			Please order a piston/spring package, cpl.		
3	□	2	O-ring, NBR		
4		1	Plug		
5		1	Guide pin		
			Please order a piston/spring package, cpl.		
6		1	Piston rod		
			Please order a piston/spring package, cpl.		
7		1	Spring		
			Please order a piston/spring package, cpl.		
8		1	O-ring, NBR		
			Please order a piston/spring package, cpl.		
9	□	1	O-ring, NBR		
10		1	Piston		
			Please order a piston/spring package, cpl.		
11	□	1	O-ring, NBR		
12		1	Lock wire	9612939401	9612939401
13		1	Bonnet	9612939002	9612939002
14		1	Air fitting	9611991988	9611991988
19		2	Screw	9611994401	9611994401
20		1	Threaded pin	9611994282	9611994282
21a		2	Clamp with hexnut	9612939301	9612939301
21b		2	Clamp with wingnut	9612939308	9612939308
22		1	Sealing element	9612939101	9612939101
23	♦	1	Lip seal, EPDM		
		1	Lip seal, HNBR		
		1	Lip seal, FPM		
24	♦	1	O-ring, NBR		
25	♦	1	Change-over plug		
26	♦	1	O-ring, EPDM		
		1	O-ring, HNBR		
		1	O-ring, FPM		
27		1	Upper valve body, with welding ends, 1 ports	9612934717	9612934817
		1	Upper valve body, with welding ends, 2 ports	9612934718	9612934818
		1	Upper valve body, with clamp ends, 1 ports	9612934733	9612934833
		1	Upper valve body, with clamp ends, 2 ports	9612934734	9612934834
28	♦	2	O-ring, EPDM		
		2	O-ring, HNBR		
		2	O-ring, FPM		
29		1	Valve seat	9612939201	9612939201
30		1	Lower valve body, with welding ends, 2 ports	9612934417	9612934517
		1	Lower valve body, with welding ends, 3 ports	9612934418	9612934518
		1	Lower valve body, with clamp ends, 2 ports	9612934433	9612934533
		1	Lower valve body, with clamp ends, 3 ports	9612934434	9612934534

		12.7 mm	19 mm
Service kits for actuator			
□	**Service kit, NBR**	**9611926323**	**9611926323**
Service kits for product wetted parts, standard			
♦	**Service kits, EPDM**	**9611926322**	**9611926333**
♦	**Service kits, HNBR**	**9611926320**	**9611926331**
♦	**Service kits, FPM**	**9611926321**	**9611926332**

Parts marked with □♦ are included in the service kit.
Recommended spare parts: service kits.

TD 900219/1

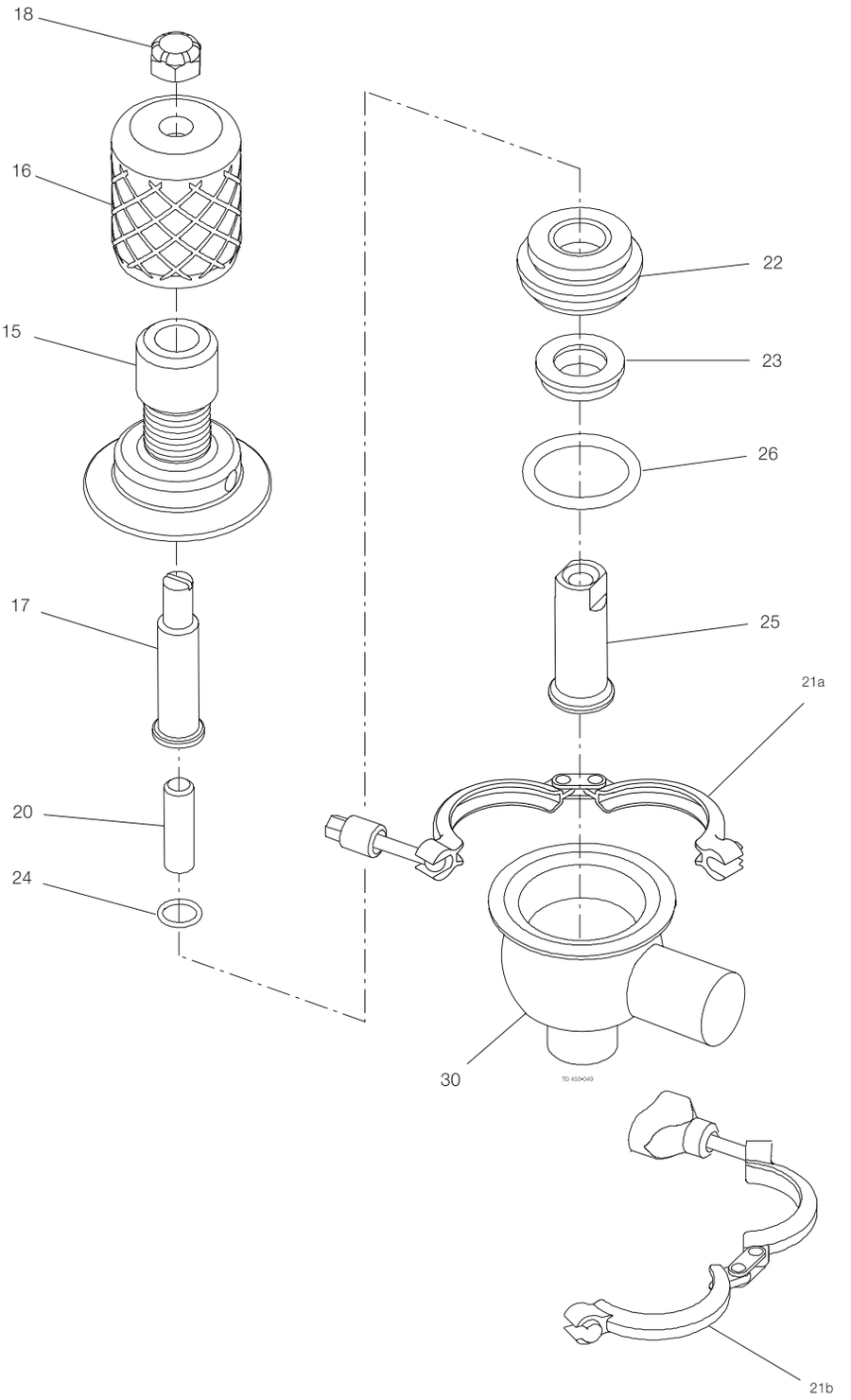
18
16
15
17
20
24
22
23
26
25
21a
30
21b

Pos		Qty	Denomination	12.7 mm	19 mm
			Manual handle, cpl.	9612940408	9612940408
15		1	Manual bonnet	9612944102	9612944102
16		1	Handle	9612943901	9612943901
17		1	Stem extension	9612944001	9612944001
18		1	Lock nut	9611993808	9611993808
20		1	Threaded pin	9611994282	9611994282
21a		1	Clamp with hexnut	9612939301	9612939301
21b		1	Clamp with wingnut	9612939308	9612939308
22		1	Sealing element	9612939101	9612939101
23	♦	1	Lip seal, EPDM		
		1	Lip seal, HNBR		
		1	Lip seal, FPM		
24	♦	1	O-ring, NBR		
25	♦	1	Stop plug		
26	♦	1	O-ring, EPDM		
		1	O-ring, HNBR		
		1	O-ring, FPM		
30		1	Lower valve body, with welding ends, 2 ports	9612934417	9612934517
		1	Lower valve body, with welding ends, 3 ports	9612934418	9612934518
		1	Lower valve body, with clamp ends, 2 ports	9612934433	9612934533
		1	Lower valve body, with clamp ends, 3 ports	9612934434	9612934534

		12.7 mm	19 mm
Service kits for actuator			
□	**Service kit, NBR**	**9611926323**	**9611926323**
Service kits for product wetted parts, standard			
♦	**Service kits, EPDM**	**9611926319**	**9611926330**
♦	**Service kits, HNBR**	**9611926317**	**9611926328**
♦	**Service kits, FPM**	**9611926318**	**9611926329**

Parts marked with ♦ are included in the service kit.
Recommended spare parts: service kits.

TD 900220/1

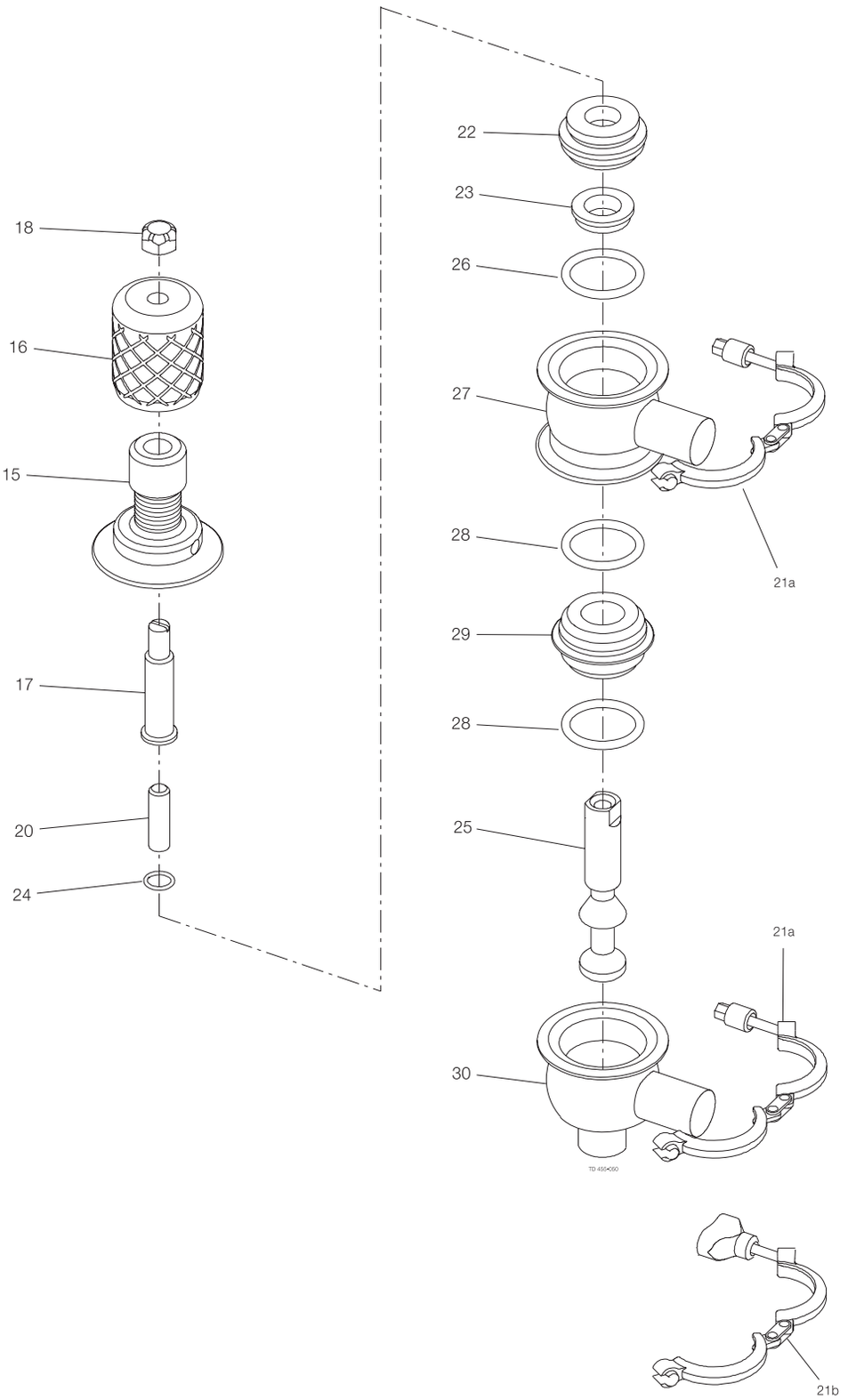
18
16
15
17
20
24
22
23
26
27
28
21a
29
28
25
21a
30
21b

Pos		Qty	Denomination	12.7 mm	19 mm
			Manual handle, cpl.	9612940408	9612940408
15		1	Manual bonnet	9612944102	9612944102
16		1	Handle	9612943901	9612943901
17		1	Stem extension	9612944001	9612944001
18		1	Lock nut	9611993808	9611993808
20		1	Threaded pin	9611994282	9611994282
21a		2	Clamp with hexnut	9612939301	9612939301
21b		2	Clamp with wingnut	9612939308	9612939308
22		1	Sealing element	9612939101	9612939101
23	♦	1	Lip seal, EPDM		
		1	Lip seal, HNBR		
		1	Lip seal, FPM		
24	♦	1	O-ring, NBR		
25	♦	1	Change-over plug		
26	♦	1	O-ring, EPDM		
		1	O-ring, HNBR		
		1	O-ring, FPM		
27		1	Upper valve body, with welding ends, 1 ports	9612934717	9612934817
		1	Upper valve body, with welding ends, 2 ports	9612934718	9612934818
		1	Upper valve body, with clamp ends, 1 ports	9612934733	9612934833
		1	Upper valve body, with clamp ends, 2 ports	9612934734	9612934834
28	♦	2	O-ring, EPDM		
		2	O-ring, HNBR		
		2	O-ring, FPM		
29		1	Valve seat	9612939201	9612939201
30		1	Lower valve body, with welding ends, 2 ports	9612934417	9612934517
		1	Lower valve body, with welding ends, 3 ports	9612934418	9612934518
		1	Lower valve body, with clamp ends, 2 ports	9612934433	9612934533
		1	Lower valve body, with clamp ends, 3 ports	9612934434	9612934534

		12.7 mm	19 mm
Service kits for actuator			
□	**Service kit, NBR**	**9611926323**	**9611926323**
Service kits for product wetted parts, standard			
♦	**Service kits, EPDM**	**9611926322**	**9611926333**
♦	**Service kits, HNBR**	**9611926320**	**9611926331**
♦	**Service kits, FPM**	**9611926321**	**9611926332**

Parts marked with ♦ are included in the service kit.
Recommended spare parts: service kits.

TD 900221/1

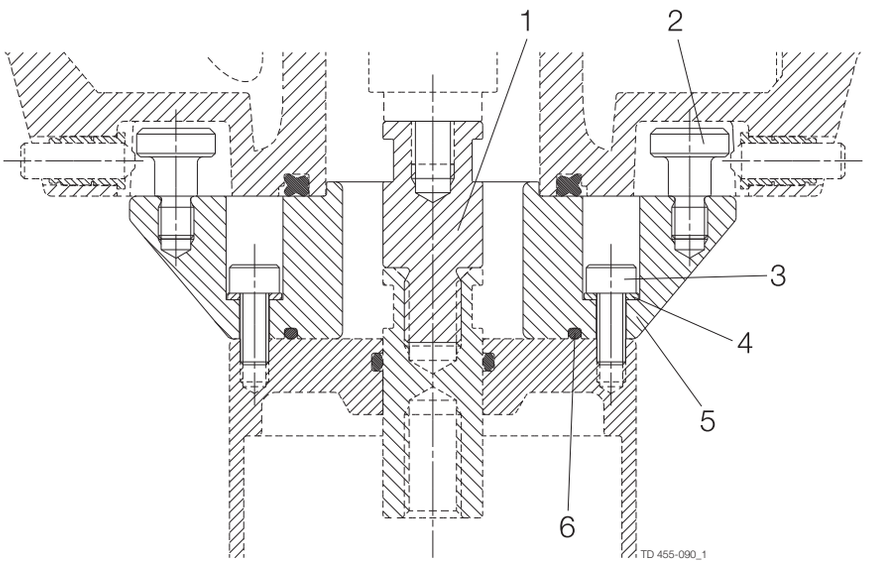
1
2
3
4
5
6
TD 455-090_1

Adapter for ThinkTop, cpl.

Pos	Qty	Denomination	9612947601
1	1	Extension	9612947801
2	2	Pin	9612947501
3	2	Screw	9611994403
4	2	Washer	9611994404
5	1	Adapter	9612947301
6	1	O-ring	9611994402

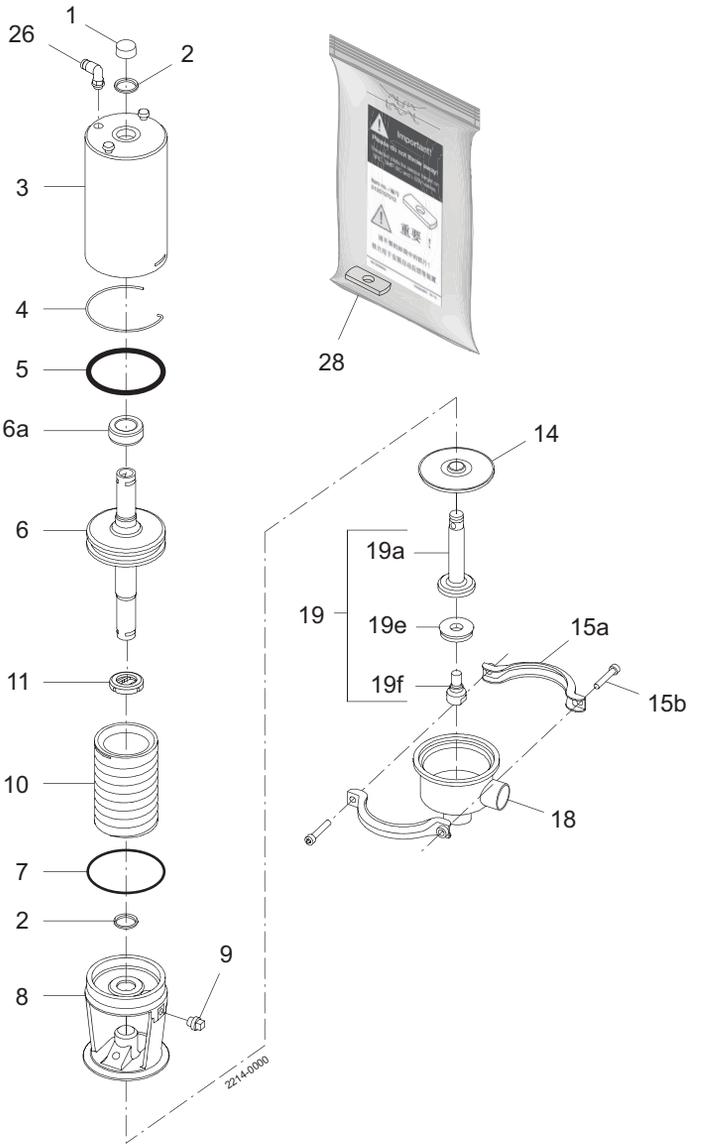

Alternative stem seal

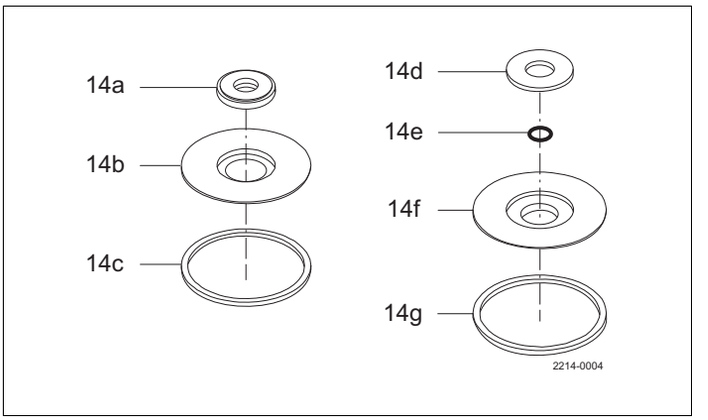

Special lip seal

Parts for FEP lip seal

Actuator

Pos		Qty	Denomination	DN 25 25 mm
			Actuator, -1, complete	9612608725
			Actuator, -2, complete	9612608726
			Actuator, -3, complete	9612608727
1		1	Cap	3180105256
2	□	2	O-ring	22340625
3		1	Cylinder	3135301391
4	□	1	Lock wire	3135301511
5	□	1	O-ring	22340174
6		1	Piston, -1, -2	3135306211
		1	Piston, -3	3135306212
6a		1	Stop ring	9612602101
7	□	1	O-ring	9611990396
8		1	Bonnet	3135301331
9*		2	Plug	9613414101
10*		1	Spring assembly (black)	3135306251
11	□	1	Clip, complete	3135307931
26		1(2)	Air fitting (2 pcs. only for A/A)	9611991988
28		1	Threaded plate for sensor target	3135707012

* Only for actuator -1 and -2.

Valve body part

Pos		Qty	Denomination	DN25 25 mm
Stem seal				
14	♦	1	Lip seal, EPDM (standard)	3135301551
		1	Lip seal, HNBR	3135301554
		1	Lip seal, FPM	3135301553
Clamp				
15a+b		1	Clamps and screws	3132000273
Valve body				
18		1	Valve body, 2 ports ISO	9612598709
		1	Valve body, 2 ports DIN	
		1	Valve body, 3 ports ISO	9612598710
		1	Valve body, 3 ports DIN	
Valve plug				
19		1	Plug, single, complete EPDM (standard)	9612599810
		1	Plug, single, complete NBR	9612599811
		1	Plug, single, complete FPM	9612599812
19a		1	Stem	9612599503
19e	♦○	1	Plug seal, EPDM (standard)	9612599601
		1	Plug seal, NBR	9612599602
		1	Plug seal, FPM	9612599603
		1	Plug seal, PTFE	9612627901
19f		1	Screw	9612599703

Alternatives

Pos		Qty	Denomination	DN25 25 mm
Stem seal				
14		1	Lip seal kit, EPDM (standard)	9611920078
		1	Lip seal kit, NBR	9611920079
		1	Lip seal kit, FPM	9611920080
14a	○	1	Lip seal, EPDM	9612280601
		1	Lip seal, NBR	9612280602
		1	Lip seal, FPM	9612280603
14b		1	Plate	961228501
14c	○	1	Seal ring, EPDM	3135301281
		1	Seal ring, NBR	3135301282
		1	Seal ring, FPM	3135301283
Stem seal				
14d		1	Washer	3135304521
14e	○	1	O-ring FEP/Silicone	9611992909
14f		1	Holder	3135304531
14g	○	1	Seal ring, PTFE	3135304511

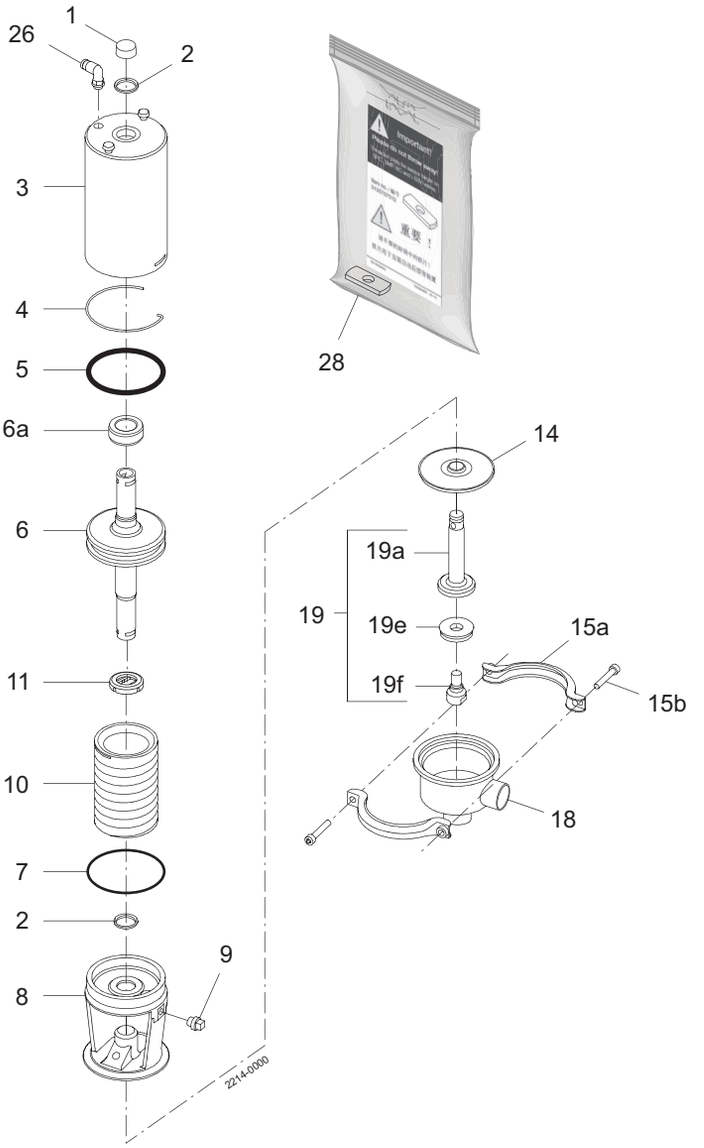

Alternative stem seal

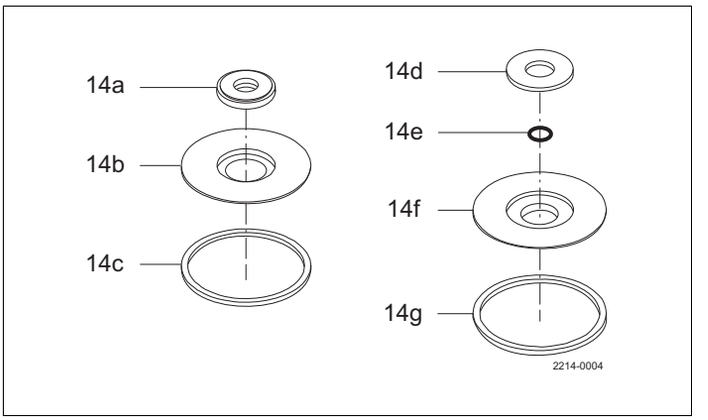

Special lip seal

Parts for FEP lip seal

		DN25 25 mm
Service kit for actuator		
□	Service kit	9611920008
Service kit for product wetted parts, standard		
♦	Service kit EPDM	9611920535
♦	Service kit NBR	9611920536
♦	Service kit FPM	9611920537
Service kit for special lip seal		
○	Service kit EPDM	9611920538
○	Service kit NBR	9611920539
○	Service kit FPM	9611920540
○	Service kit FEP	9611920541

Parts marked with □♦○ are included in the service kits

Recommended spare parts: Service kits.

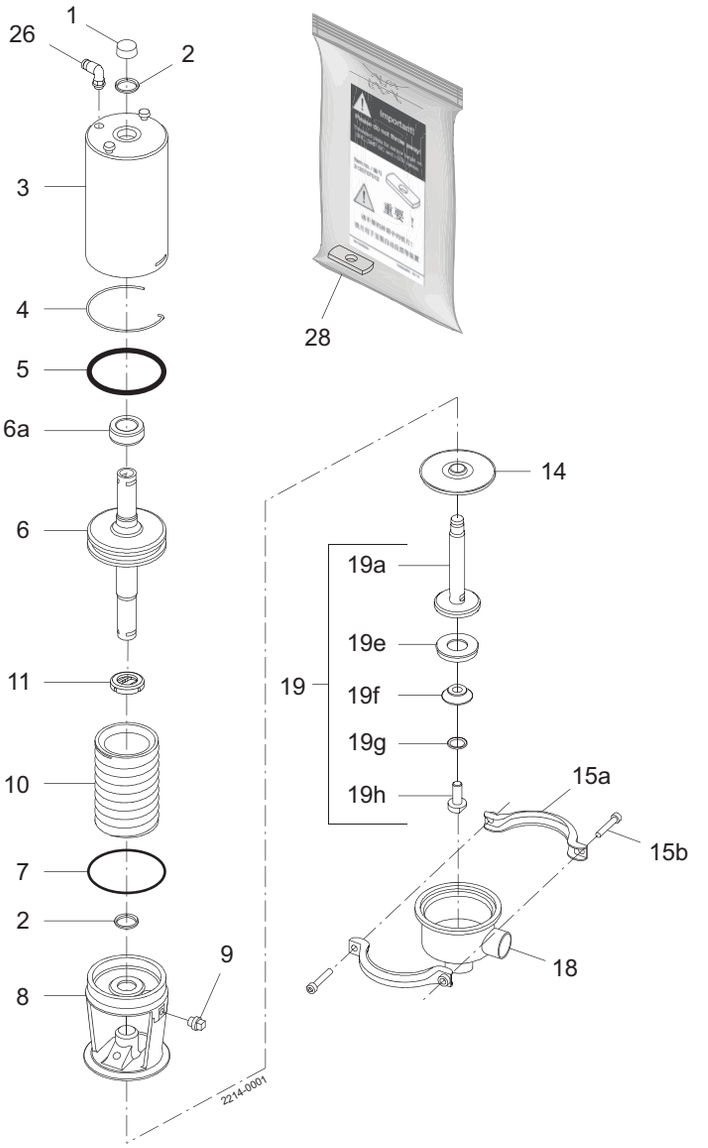

Alternative stem seal

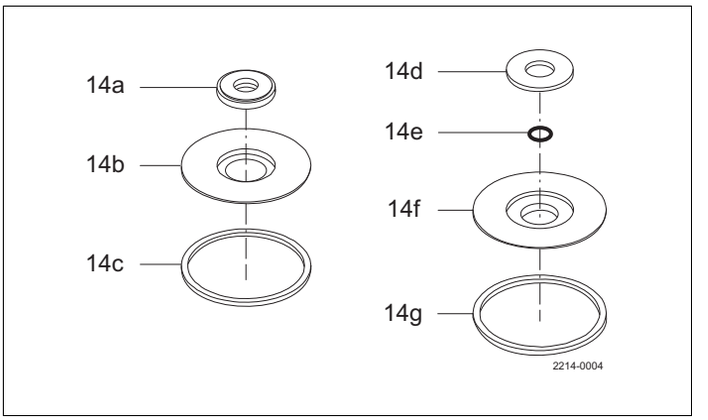

Special lip seal

Parts for FEP lip seal

Pos		Qty	Denomination	DN 40 38 mm	DN 50 51 mm	DN 65 63.5 mm	76 mm	DN 80	DN 100 101.6 mm
			Actuator, -1, complete	9613854001	9613854001	9613854001	9613854101	9613854101	9613854101
			Actuator, -2, complete	9613854002	9613854002	9613854002	9613854102	9613854102	9613854102
			Actuator, -3, complete	9613854003	9613854003	9613854003	9613854103	9613854103	9613854103
1		1	Cap	3180105256	3180105256	3180105256	3180105255	3180105255	3180105255
2	□	2	O-ring	22340625	22340625	22340625	22340649	22340649	22340649
3		1	Cylinder	3135301391	3135301391	3135301391	3135301851	3135301851	3135301851
4	□	1	Lock Wire	3135301511	3135301511	3135301511	3135301891	3135301891	3135301891
5	□	1	O-ring	22340174	22340174	22340174	22340175	22340175	22340175
6		1	Piston, -1, -2	3135306211	3135306211	3135306211	3135306191	3135306191	3135306191
		1	Piston, -3	3135306212	3135306212	3135306212			
6a		1	Stop ring (only for actuator-3)	3135312172	3135312172	3135312172			
7	□	1	O-ring	9611990396	9611990396	9611990396	22340617	22340617	22340617
8		1	Bonnet	3135301331	3135301331	3135301331	3135301901	3135301901	3135301901
9*		2	Plug	9613414101	9613414101	9613414101	9613414101	9613414101	9613414101
10*		1	Spring assembly standard (black)	3135306251	3135306251	3135306251	3135306221	3135306221	3135306221
		1	Spring assembly with extra strong spring (white)	3135306252	3135306252	3135306252	3135306222	3135306222	3135306222
11	□	1	Clip, complete, (period 84.08-)	3135307931	3135307931	3135307931	3135307932	3135307932	3135307932
26		1(2)	Air fitting (2 pcs. only for A/A)	9611991988	9611991988	9611991988	9611991988	9611991988	9611991988
28		1	Threaded plate for sensor target	3135707012	3135707012	3135707012	3135707012	3135707012	3135707012

* Only for actuator -1 and -2.

Valve body part

Pos		Qty	Denomination	DN 40 38 mm	DN 50 51 mm	DN 65 63.5 mm	76 mm	DN 80	DN 100 101.6 mm
Stem seal									
14	♦	1	Lip seal, EPDM	3135301551	3135301551	3135301551	3135301881	3135301881	3135301881
		1	Lip seal, NBR	3135301552	3135301552	3135301552	3135301882	3135301882	3135301882
		1	Lip seal, FPM	3135301553	3135301553	3135301553	3135301883	3135301883	3135301883
Clamp									
15a+b		1	Clamps & screws, (Period 9209-)	3132000273	3132000273	3132000273	3132000272	3132000272	3132000272
Valve body									
18		1	Valve body, 2 ports ISO	3135303757	3135303767	3135303807	3135303817		3135300267
		1	Valve body, 2 ports DIN						9612094401
		1	Valve body, 3 ports ISO	3135303758	3135303768	3135303808	3135303818		3135300268
		1	Valve body, 3 ports DIN						9612094402
Valve plug									
19		1	Plug, single, comp. EPDM (std)	3135303307	3135303317	3135303327	9612629710	9612629713	3135303347
		1	Plug, single, comp. NBR	3135303308	3135303318	3135303328	9612629711	9612629714	3135303348
		1	Plug, single, comp. FPM	3135303309	3135303319	3135303329	9612629712	9612629715	3135303349
19a		1	Stem	3135303403	3135303773	3135303783	3135303415	3135303416	3135303793
19e	♦○	1	Plug seal, EPDM (std)	3135303201	3135303211	3135303221	3135303241	9612095001	3135303251
		1	Plug seal, NBR	3135303202	3135303212	3135303222	3135303242	9612095002	3135303252
		1	Plug seal, FPM	3135303203	3135303213	3135303223	3135303243	9612095003	3135303253
		1	Plug seal, PTFE	3135312111	3135312121	3135312131	3135312141	3135312251	3135312151
19f		1	Washer	3135303572	3135303582	3135303592	3135303603	3135303604	3135303612
19g	♦○	1	O-ring, EPDM (std)	99003401	99003401	99003401	99003401	99003401	99003401
		1	O-ring, NBR	22340421	22340421	22340421	22340421	22340421	22340421
		1	O-ring, FPM	22340435	22340435	22340435	22340435	22340435	22340435
		1	O-ring, PTFE	9612433001	9612433001	9612433001	9612433001	9612433001	9612433001
19h		1	Screw	3135303621	3135303621	3135303621	3135303621	3135303621	3135303621

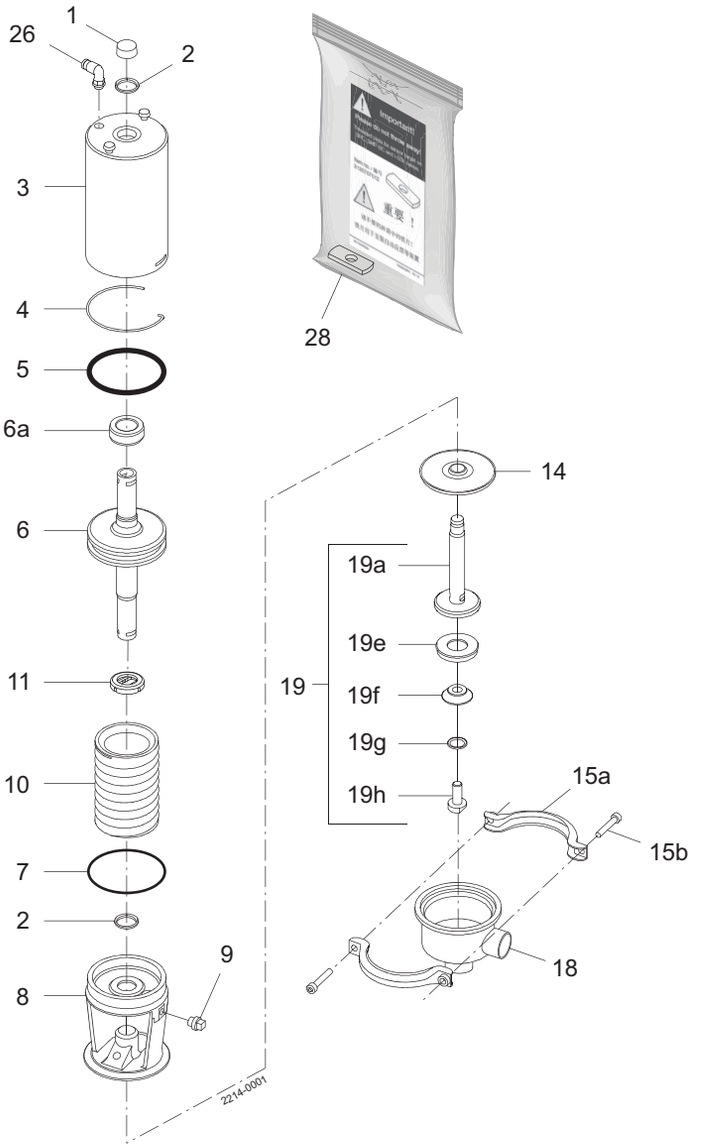

Alternative stem seal

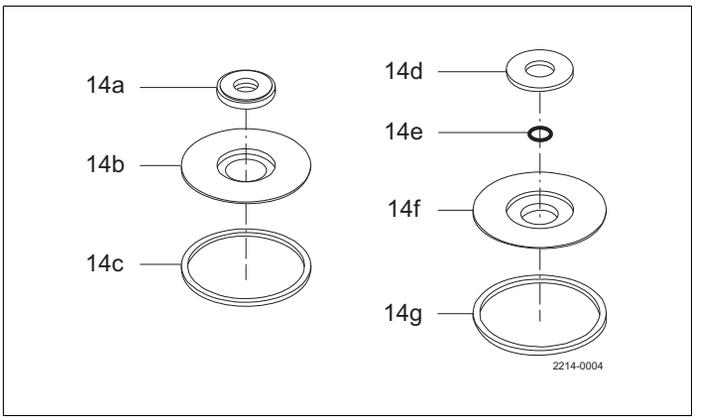

Special lip seal

Parts for FEP lip seal

Alternatives

Pos	Qty	Denomination	DN 40 38 mm	DN 50 51 mm	DN 65 63.5 mm	76 mm	DN 80	DN 100 101.6 mm
Stem seal								
14	1	Lip seal kit, EPDM (std)	9611920078	9611920078	9611920078	9611920142	9611920142	9611920142
	1	Lip seal kit, NBR	9611920079	9611920079	9611920079	9611920143	9611920143	9611920143
	1	Lip seal kit, FPM	9611920080	9611920080	9611920080	9611920144	9611920144	9611920144
14a ○	1	Lip seal, EPDM	9612280601	9612280601	9612280601	9612308801	9612308801	9612308801
	1	Lip seal, NBR	9612280602	9612280602	9612280602	9612308802	9612308802	9612308802
	1	Lip seal, FPM	9612280603	9612280603	9612280603	9612308803	9612308803	9612308803
14b	1	Plate	9612280501	9612280501	9612280501	9612308701	9612308701	9612308701
14c ○	1	Seal ring, EPDM	3135301281	3135301281	3135301281	3135302051	3135302051	3135302051
	1	Seal ring, NBR	3135301282	3135301282	3135301282	3135302052	3135302052	3135302052
	1	Seal ring, FPM	3135301283	3135301283	3135301283	3135302053	3135302053	3135302053
Stem seal								
14d	1	Washer	3135304521	3135304521	3135304521	3135304522	3135304522	3135304522
14e ○	1	O-ring FEP/Silicone	9611992909	9611992909	9611992909	9611992910	9611992910	9611992910
14f	1	Holder	3135304531	3135304531	3135304531	3135304541	3135304541	3135304541
14g ○	1	Seal ring, PTFE	3135304511	3135304511	3135304511	3135304512	3135304512	3135304512

		DN 40 38 mm	DN 50 51 mm	DN 65 63.5 mm	76 mm	DN 80	DN 100 101.6 mm
Service kit for actuator							
□	Service kit	9611920008	9611920008	9611920008	9611920009	9611920009	9611920009
Service kit for product wetted parts, standard							
♦	Service kit EPDM	9611920010	9611920013	9611920016	9611920019	9611920105	9611920022
♦	Service kit NBR	9611920011	9611920014	9611920017	9611920020	9611920106	9611920023
♦	Service kit FPM	9611920012	9611920015	9611920018	9611920021	9611920107	9611920024
Service kit for special lip seal							
○	Service kit EPDM	9611920447	9611920451	9611920455	9611920459	9611920463	9611920467
○	Service kit NBR	9611920448	9611920452	9611920456	9611920460	9611920464	9611920468
○	Service kit FPM	9611920449	9611920453	9611920457	9611920461	9611920465	9611920469
○	Service kit FEP	9611920450	9611920454	9611920458	9611920462	9611920466	9611920470

Parts marked with □♦○ are included in the service kits

Recommended spare parts: Service kits.

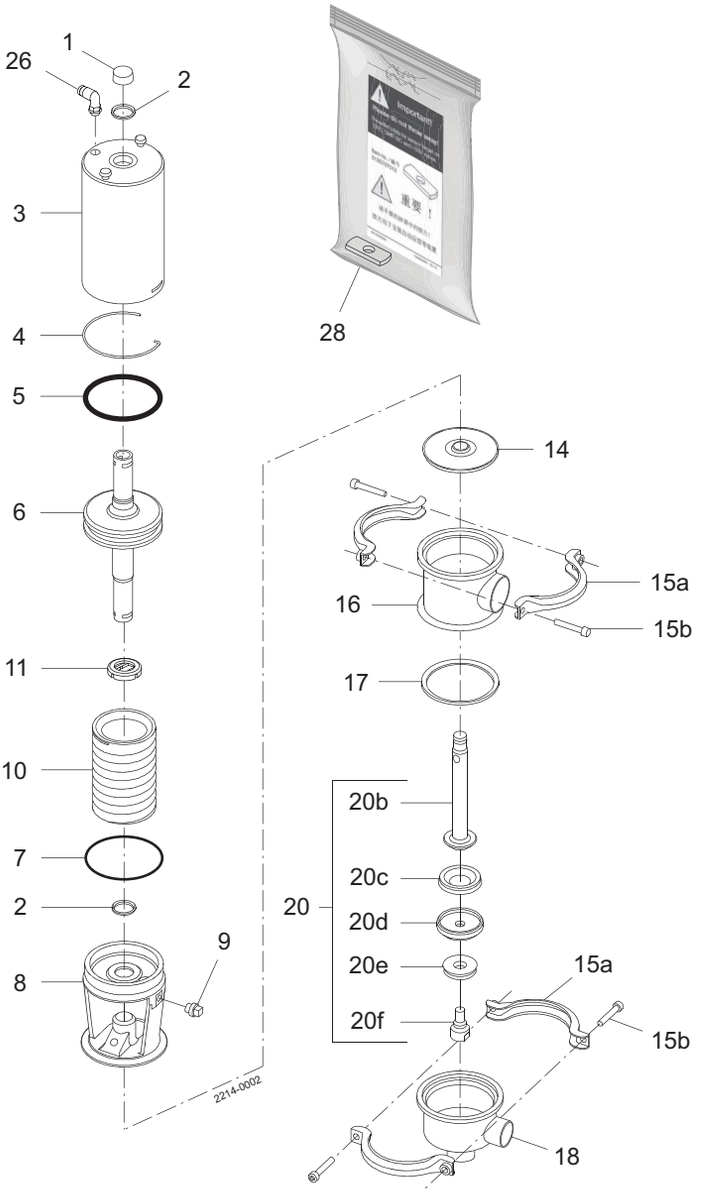

Alternative stem seal

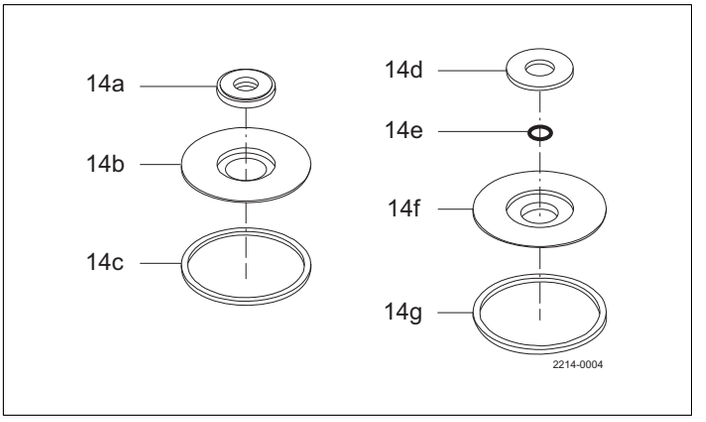

Special lip seal Parts for FEP lip seal

Pos		Qty	Denomination	DN 25 25 mm
			Actuator, -1, complete	9613854001
			Actuator, -2, complete	9613854002
			Actuator, -3, complete	9613854003
1		1	Cap	3180105256
2	□	2	O-ring	22340625
3		1	Cylinder	3135301391
4	□	1	Lock Wire	3135301511
5	□	1	O-ring	22340174
6		1	Piston, -1, -2	3135306211
		1	Piston, -3	3135306212
7	□	1	O-ring	9611990396
8		1	Bonnet	3135301331
9*		2	Plug	961341410
10*		1	Spring assembly, standard (black)	3135306251
11	□	1	Clip, complete	3135307931
26		1(2)	Air fitting (2 pcs. only for A/A)	9611991988
28		1	Threaded plate for sensor target	3135707012

* Only for actuator -1 and -2.

Valve body part

Pos		Qty	Denomination	DN 25 25 mm
Stem seal				
14	♦	1	Lip seal, EPDM (standard)	3135301551
		1	Lip seal, HNBR	3135301554
		1	Lip seal, FPM	3135301553
Clamp				
15a+b		2	Clamps and screws (Period 9209-)	3132000273
Valve body				
16		1	Valve body, upper, 1 port ISO	9612599109
		1	Valve body, upper, 1 port DIN	
		1	Valve body, upper, 2 ports ISO	9612599110
		1	Valve body, upper, 2 ports DIN	
17	♦○	1	Seal ring, EPDM (standard)	3135301281
		1	Seal ring, NBR	3135301282
		1	Seal ring, FPM	3135301283
		1	Seal ring, PTFE	3135304511
18		1	Valve body, lower, 2 ports ISO	9612598709
		1	Valve body, lower, 2 ports DIN	
		1	Valve body, lower, 3 ports ISO	9612598710
		1	Valve body, lower, 3 ports DIN	
Valve plug				
20		1	Plug, double, complete EPDM (standard)	9612600610
		1	Plug, double, complete NBR	9612600611
		1	Plug, double, complete FPM	9612600612
20b		1	Stem	9612600403
20c	♦○	1	Plug seal, upper, EPDM (standard)	3135303201
		1	Plug seal, upper, NBR	3135303202
		1	Plug seal, upper, FPM	3135303203
		1	Plug seal, upper, PTFE	3135312111
20d		1	Middle piece	9612600503
20e	♦○	1	Plug seal, lower, EPDM (standard)	9612599601
		1	Plug seal, lower, NBR	9612599602
		1	Plug seal, lower, FPM	9612599603
		1	Plug seal, lower, PTFE	9612627901
20f		1	Screw	9612599703

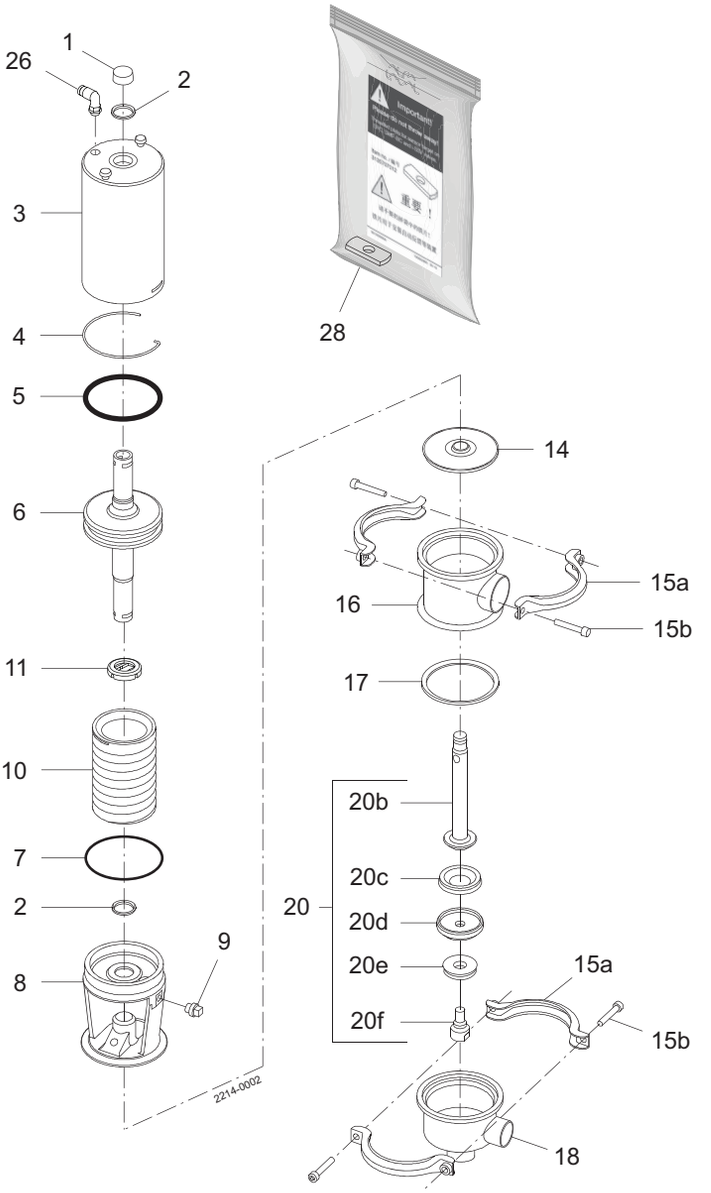

Alternative stem seal

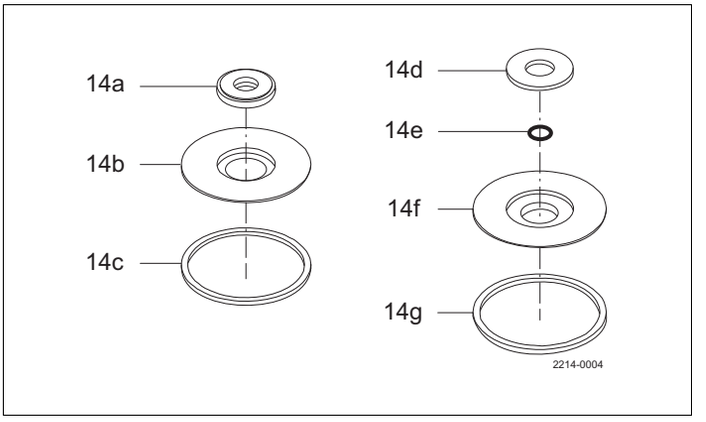

Special lip seal

Parts for FEP lip seal

Alternatives

Pos	Qty	Denomination	DN 25 25 mm
Stem seal			
14	1	Lip seal kit, EPDM (standard)	9611920078
	1	Lip seal kit, NBR	9611920079
	1	Lip seal kit, FPM	9611920080
14a ○	1	Lip seal, EPDM	9612280601
	1	Lip seal, NBR	9612280602
	1	Lip seal, FPM	9612280603
14b	1	Plate	961228501
14c ○	1	Seal ring, EPDM	3135301281
	1	Seal ring, NBR	3135301282
	1	Seal ring, FPM	3135301283
Stem seal			
14d	1	Washer	3135304521
14e ○	1	O-ring FEP/Silicone	9611992909
14f	1	Holder	3135304531
14g ○	1	Seal ring, PTFE	3135304511

		DN 25 25 mm
Servive kit for actuator		
□	**Service kit**	**9611920008**
Service kit for product wetted parts, standard		
♦	**Service kit EPDM**	**9611920542**
♦	**Service kit NBR**	**9611920543**
♦	**Service kit FPM**	**9611920544**
Service kit for special lip seal		
○	**Service kit EPDM**	**9611920545**
○	**Service kit NBR**	**9611920546**
○	**Service kit FPM**	**9611920547**
○	**Service kit FEP**	**9611920548**

Parts marked with □♦○ are included in the service kits.

Recommended spare parts: Service kits.

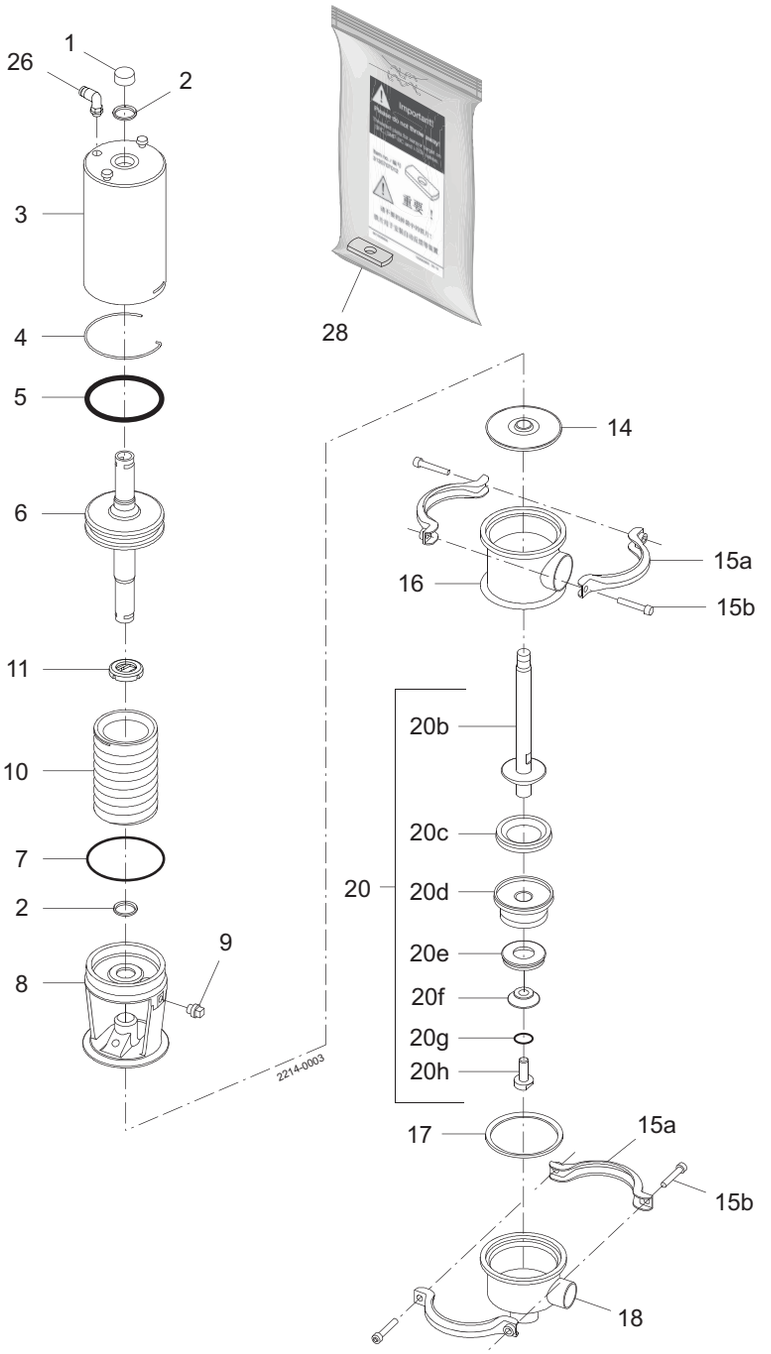

Alternative stem seal

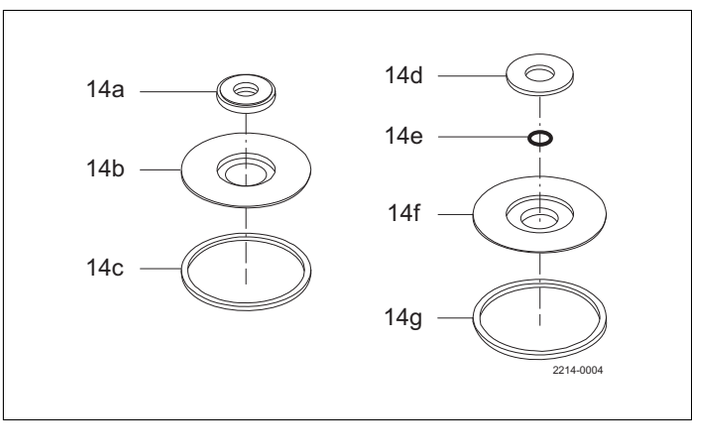

Special lip seal Parts for FEP lip seal

Actuator

Pos		Qty	Denomination	DN 40 38 mm	DN 50 51 mm	DN 65 63.5 mm	76 mm	DN 80	DN 100 101.6 mm
			Actuator, -1, complete	9613854001	9613854001	9613854001	9613854101	9613854101	9613854101
			Actuator, -2, complete	9613854002	9613854002	9613854002	9613854102	9613854102	9613854102
			Actuator, -3, complete	9613854003	9613854003	9613854003	9613854103	9613854103	9613854103
1		1	Cap	3180105256	3180105256	3180105256	3180105255	3180105255	3180105255
2	□	2	O-ring	22340625	22340625	22340625	22340649	22340649	22340649
3		1	Cylinder	3135301391	3135301391	3135301391	3135301851	3135301851	3135301851
4	□	1	Lock Wire	3135301511	3135301511	3135301511	3135301891	3135301891	3135301891
5	□	1	O-ring	22340174	22340174	22340174	22340175	22340175	22340175
6		1	Piston, -1, -2	3135306211	3135306211	3135306211	3135306191	3135306191	3135306191
		1	Piston, -3	3135306212	3135306212	3135306212			
7	□	1	O-ring	9611990396	9611990396	9611990396	22340617	22340617	22340617
8		1	Bonnet	3135301331	3135301331	3135301331	3135301901	3135301901	3135301901
9*		2	Plug	9613414101	9613414101	9613414101	9613414101	9613414101	9613414101
10*		1	Spring assembly, standard (black)	3135306251	3135306251	3135306251	3135306221	3135306221	3135306221
		1	Spring assembly with extra strong spring (white)	3135306252	3135306252	3135306252	3135306222	3135306222	3135306222
11	□	1	Clip, complete (period 84.08-)	3135307931	3135307931	3135307931	3135307932	3135307932	3135307932
26		1(2)	Air fitting (2 pcs. only for A/A)	9611991988	9611991988	9611991988	9611991988	9611991988	9611991988
28		1	Threaded plate for sensor target	3135707012	3135707012	3135707012	3135707012	3135707012	3135707012

* Only for actuator -1 and -2.

Valve body part

Pos		Qty	Denomination	DN 40 38 mm	DN 50 51 mm	DN 65 63.5 mm	76 mm	DN 80	DN 100 101.6 mm
Stem seal									
14	♦	1	Lip seal, EPDM (std)	3135301551	3135301551	3135301551	3135301881	3135301881	3135301881
		1	Lip seal, NBR	3135301552	3135301552	3135301552	3135301882	3135301882	3135301882
		1	Lip seal, FPM	3135301553	3135301553	3135301553	3135301883	3135301883	3135301883
Clamp									
15a+b		2	Clamps & screws (Period 9209-)	3132000273	3132000273	3132000273	3132000272	3132000272	3132000272
Valve body									
16		1	Valve body, upper, 1 port ISO	3135300534	3135300547	3135300557	3135300567		3135300587
		1	Valve body, upper, 1 port DIN						9612094901
		1	Valve body, upper, 2 ports ISO	3135300535	3135300548	3135300558	3135300568		3135300588
		1	Valve body, upper, 2 ports DIN						9612094902
17	♦○	1	Seal ring, EPDM (std)	3135301281	3135301281	3135301281	3135302051	3135302051	3135302051
		1	Seal ring, NBR	3135301282	3135301282	3135301282	3135302052	3135302052	3135302052
		1	Seal ring, FPM	3135301283	3135301283	3135301283	3135302053	3135302053	3135302053
		1	Seal ring, PTFE	3135304511	3135304511	3135304511	3135304512	3135304512	3135304512
18		1	Valve body, lower, 2 ports ISO	3135303757	3135303767	3135303807	3135303817		3135300267
		1	Valve body, lower, 2 ports DIN						9612094401
		1	Valve body, lower, 3 ports ISO	3135303758	3135303768	3135303808	3135303818		3135300268
		1	Valve body, lower, 3 ports DIN						9612094402
Valve plug									
20		1	Plug, double, comp. EPDM (std)	3135303357	3135303367	3135303377	9612947107	9612947110	3135303397
		1	Plug, double, comp. NBR	3135303358	3135303368	3135303378	9612947108	9612947111	3135303398
		1	Plug, double, comp. FPM	3135303359	3135303369	3135303379	9612947109	9612947112	3135303399
20b		1	Stem	3135303497	3135303498	3135303499	3135303507	3135303509	3135303508
20c	♦○	1	Plug seal, upper, EPDM (std)	3135303211	3135303211	3135303231	3135303241	3135303241	3135303251
		1	Plug seal, upper, NBR	3135303212	3135303212	3135303232	3135303242	3135303242	3135303252
		1	Plug seal, upper, FPM	3135303213	3135303213	3135303233	3135303243	3135303243	3135303253
		1	Plug seal, upper, PTFE	3135312121	3135312121	3135312161	3135312141	3135312141	3135312151
20d		1	Middle piece	3135303632	3135303642	3135303652	3135303664	9612098402	3135303672
20e	♦○	1	Plug seal, lower, EPDM (std)	3135303201	3135303211	3135303221	3135303241	9612095001	3135303251
		1	Plug seal, lower, NBR	3135303202	3135303212	3135303222	3135303242	9612095002	3135303252
		1	Plug seal, lower, FPM	3135303203	3135303213	3135303223	3135303243	9612095003	3135303253
		1	Plug seal, lower, PTFE	3135312111	3135312121	3135312131	3135312141	3135312251	3135312151
20f		1	Washer	3135303572	3135303582	3135303592	3135303603	3135303604	3135303612
20g	♦○	1	O-ring, EPDM (std)	99003401	99003401	99003401	99003401	99003401	99003401
		1	O-ring, NBR	22340421	22340421	22340421	22340421	22340421	22340421
		1	O-ring, FPM	22340435	22340435	22340435	22340435	22340435	22340435
		1	O-ring, PTFE	9612433001	9612433001	9612433001	9612433001	9612433001	9612433001
20h		1	Screw	3135303621	3135303621	3135303621	3135303621	3135303621	3135303621

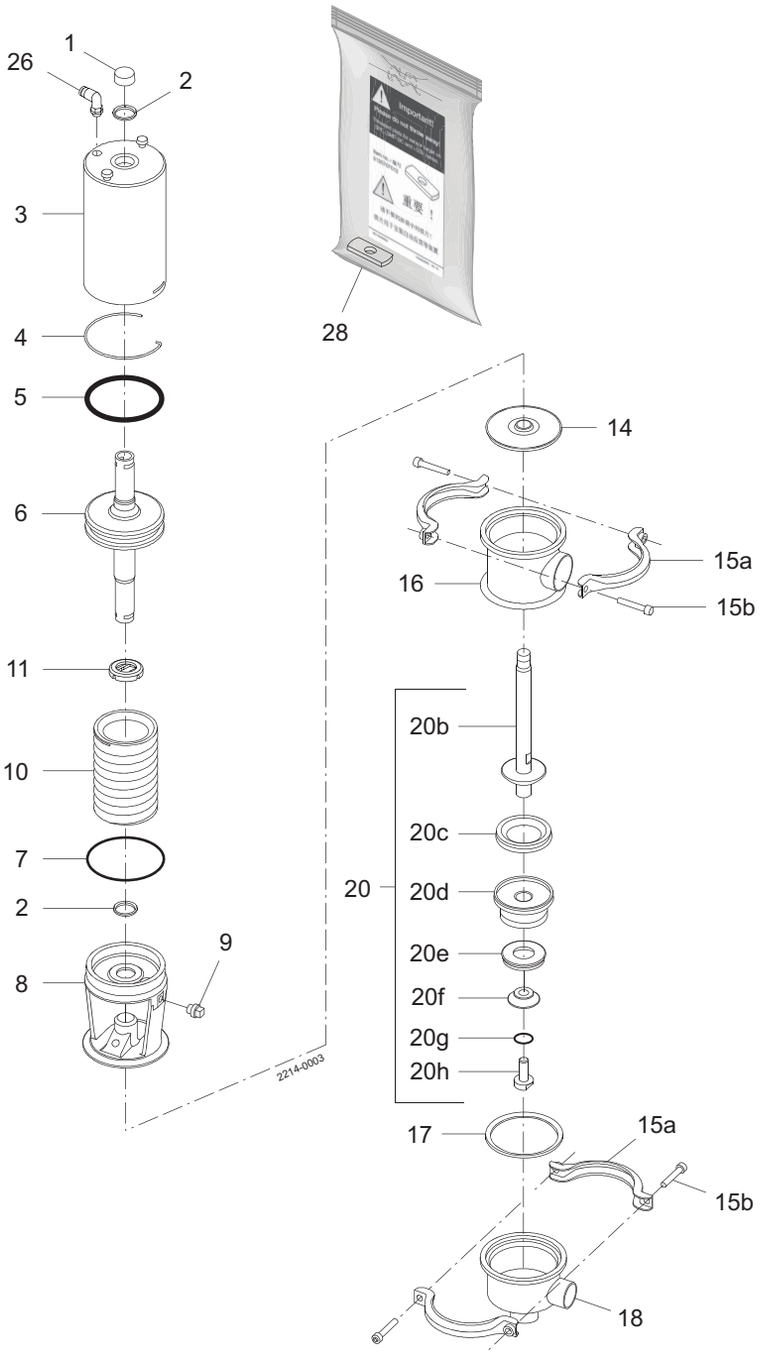

Alternative stem seal

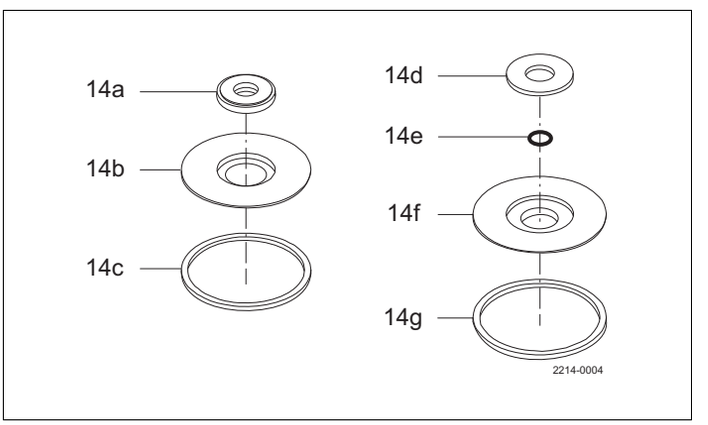

Special lip seal Parts for FEP lip seal

Alternatives

Pos	Qty	Denomination	DN 40 38 mm	DN 50 51 mm	DN 65 63.5 mm	76 mm	DN 80	DN 100 101.6 mm
Stem seal								
14	1	Lip seal kit, EPDM (std)	9611920078	9611920078	9611920078	9611920142	9611920142	9611920142
	1	Lip seal kit, NBR	9611920079	9611920079	9611920079	9611920143	9611920143	9611920143
	1	Lip seal kit, FPM	9611920080	9611920080	9611920080	9611920144	9611920144	9611920144
14a ○	1	Lip seal, EPDM	9612280601	9612280601	9612280601	9612308801	9612308801	9612308801
	1	Lip seal, NBR	9612280602	9612280602	9612280602	9612308802	9612308802	9612308802
	1	Lip seal, FPM	9612280603	9612280603	9612280603	9612308803	9612308803	9612308803
14b	1	Plate	9612280501	9612280501	9612280501	9612308701	9612308701	9612308701
14c ○	1	Seal ring, EPDM	3135301281	3135301281	3135301281	3135302051	3135302051	3135302051
	1	Seal ring, NBR	3135301282	3135301282	3135301282	3135302052	3135302052	3135302052
	1	Seal ring, FPM	3135301283	3135301283	3135301283	3135302053	3135302053	3135302053
Stem seal								
14d	1	Washer	3135304521	3135304521	3135304521	3135304522	3135304522	3135304522
14e ○	1	O-ring FEP/Silicone	9611992909	9611992909	9611992909	9611992910	9611992910	9611992910
14f	1	Holder	3135304531	3135304531	3135304531	3135304541	3135304541	3135304541
14g ○	1	Seal ring, PTFE	3135304511	3135304511	3135304511	3135304512	3135304512	3135304512

	Denomination	DN 40 38 mm	DN 50 51 mm	DN 65 63.5 mm	76 mm	DN 80	DN 100 101.6 mm
Service kit for actuator							
□	Service kit	9611920008	9611920008	9611920008	9611920009	9611920009	9611920009
Service kit for product wetted part, standard							
♦	Service kit EPDM	9611920025	9611920028	9611920031	9611920034	9611920108	9611920037
♦	Service kit NBR	9611920026	9611920029	9611920032	9611920035	9611920109	9611920038
♦	Service kit FPM	9611920027	9611920030	9611920033	9611920036	9611920110	9611920039
Service kit for special lip seal							
○	Service kit EPDM	9611920471	9611920475	9611920479	9611920483	9611920487	9611920491
○	Service kit NBR	9611920472	9611920476	9611920480	9611920484	9611920488	9611920492
○	Service kit FPM	9611920473	9611920477	9611920481	9611920485	9611920489	9611920493
○	Service kit FEP	9611920474	9611920478	9611920482	9611920486	9611920490	9611920494

Parts marked with □♦○ are included in the service kits.

Recommended spare parts: Service kits.

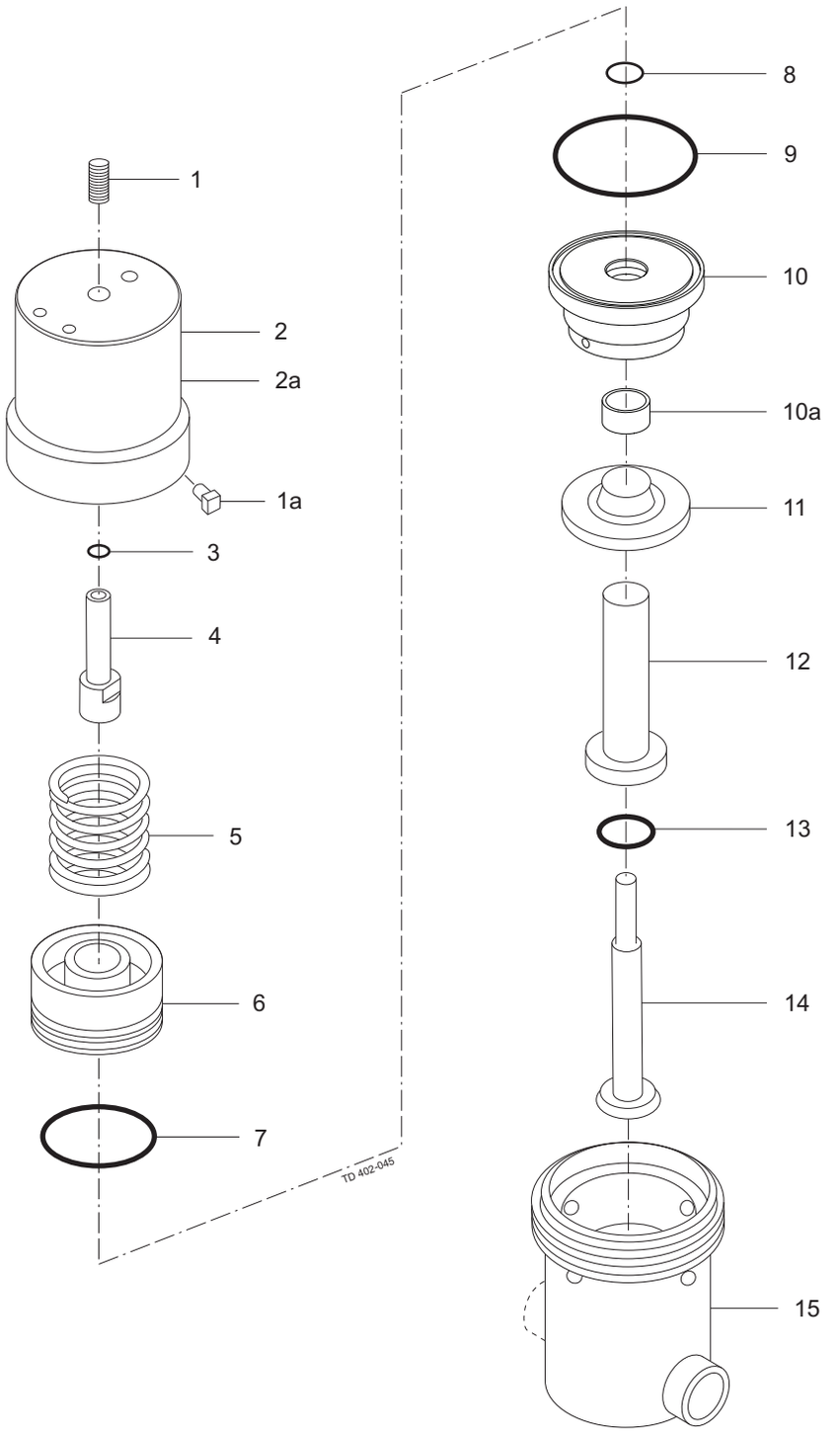
1
2
2a
1a
3
4
5
6
7
TD 402-045
8
9
10
10a
11
12
13
14
15

Pos		Qty	Denomination	25 mm
1		1	Pointed screw	9611990217
1a		1	Plug	
2		1	Air cylinder, Stainless steel (standard)	9612081401
2a		1	Air cylinder, noryle	
3	□	1	O-ring, NBR	9611990038
4		1	Nut	9611402441
5		1	Spring	9611990410
6		1	Piston	9611402433
7	□	1	O-ring, NBR	9611990039
8	□	1	O-ring, NBR	9611990049
9	□	1	O-ring, NBR	9611990022
10		1	Bottom piece cpl (incl. 10a) (2106 ->)	8010001897
10a		1	Guide ring (2106 ->)	8010000413
10		1	Bottom piece (-> 2106)	
11	♦	1	Lip seal, NBR (standard)	9611403100
		1	Lip seal, EPDM	9611403101
		1	Lip seal, FPM	9611403102
12		1	Hollow spindle	9611402435
13	♦	1	O-ring, NBR (standard)	9611990040
		1	O-ring, EPDM	9611990554
		1	O-ring, FPM	9611990045
14		1	Valve spindle	9611402489
15		1	L-Valve house	9611402428
		1	T-Valve house	9611402521

		25 mm
Service Kit for Actuator		
□	**Service kit**	**9611924001**
Service Kit for Product wetted parts		
♦	**Service kit, NBR**	**9611924002**
♦	**Service kit, EPDM**	**9611924003**
♦	**Service kit, FPM**	**9611924004**

Parts marked with □♦ are included in the service kits.

Recommended spare parts: Service kits.

900-427

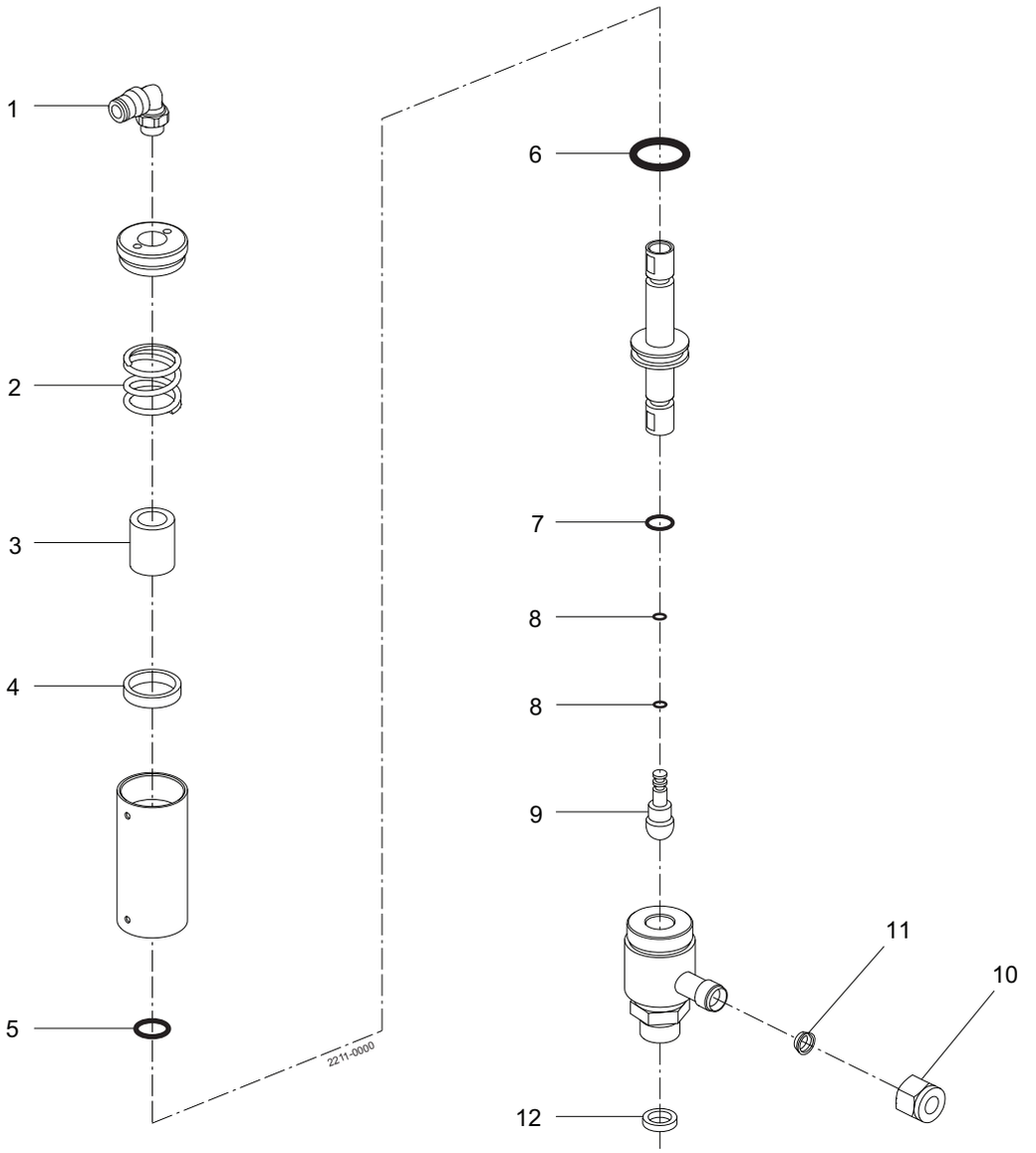
1
2
3
4
5
6
7
8
8
9
10
11
12
2211-0000

Pos		Qty	Denomination	
1		1	Air fitting	9611991988
2		1	Spring	9615081601
3		1	Distance bushing	9615081501
4		1	Distance bushing	9615081701
5	□	1	O-ring, NBR	
6	□	1	O-ring, NBR	
7	□	1	O-ring, EPDM	
8	□	2	O-ring, NBR	
9	□	1	Tip, PTFE	
10		1	Nut	9611995505
11		1	Ferrule set	9611995506
12		1	Gasket	9615091201

Service kits: Mini Flow Valve, Pneumatic Angle Valve NO / NC

□		**Service Kit**	**9615146001**

Parts marked with □ are included in the service kits.

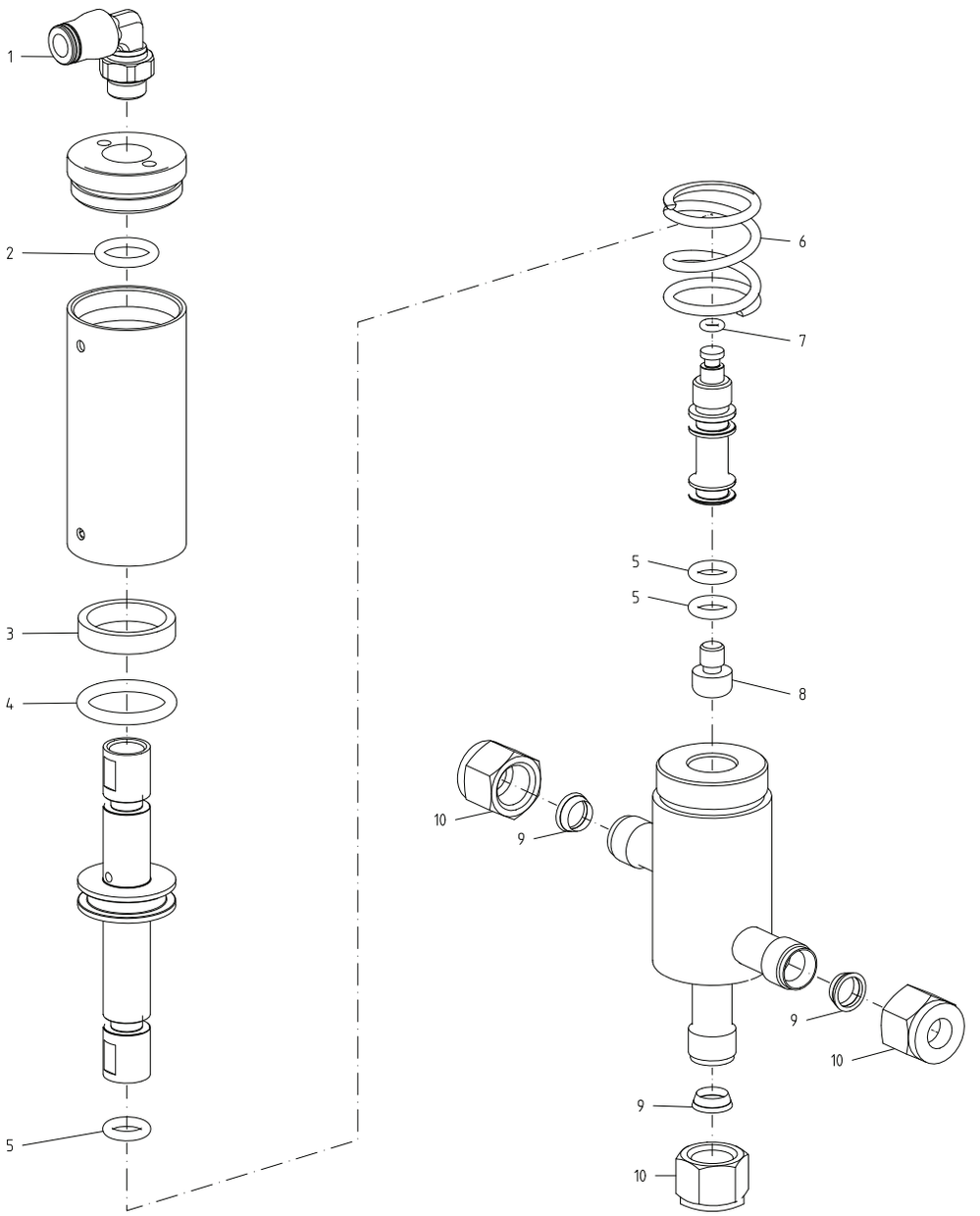
1
2
3
4
5
6
7
5
5
8
10
9
9
10
9
10

Pos		Qty	Denomination	
1		1	Air fitting	9611991988
2	□	1	O-ring, NBR	
3		1	Distance bushing	9615081701
4	□	1	O-ring, NBR	
5	□	3	O-ring, EPDM	
6		1	Spring	9615081601
7	□	1	O-ring, NBR	
8	□	1	Tip, PTFE	
9		3	Ferrule set	9611995506
10		3	Nut	9611995505

Service kits: Mini Flow Valve, Pneumatic Change Over Valve NO / NC

□	**Service Kit**	**9615146002**

Parts marked with □ are included in the service kits.

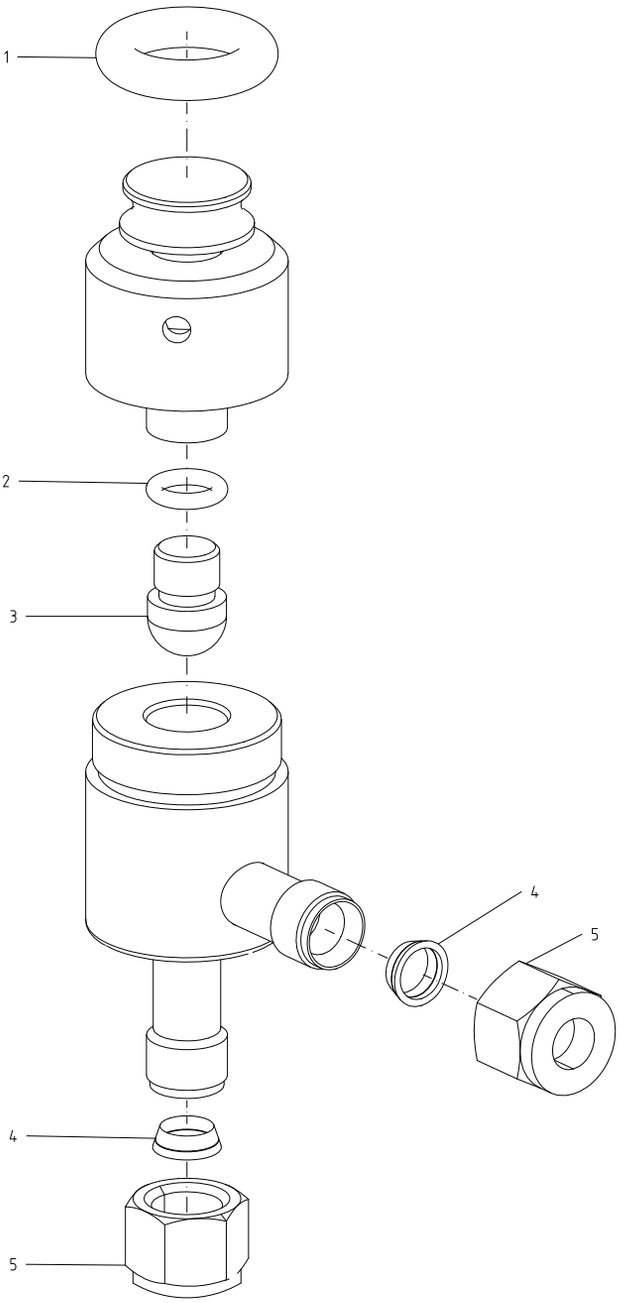
1
2
3
4
5
4
5

Pos		Qty	Denomination	
1	□	1	O-ring, NBR	
2	□	1	O-ring, EPDM	
3	□	1	Tip, PTFE	
4		2	Nut	9611995505
5		2	Ferrule set	9611995506

Service kits: Mini Flow Valve, Manual

□	**Service Kit**	**9615146003**

Parts marked with □ are included in the service kits.

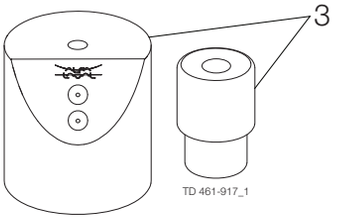

Seat tool for elastomer

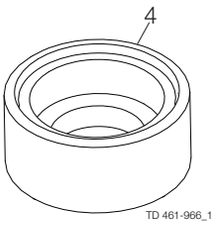

Seat tool for TR2 (PTFE)

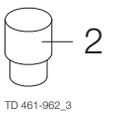

Tool for changing plast bushing (pos. 24 in Unique SSV/7000" spare part

Valve type	Valve size						
	25 mm/ DN25	38 mm/ DN40	51 mm/ DN50	63.5 mm/ DN65	76.1 mm/ DN80	101.6 mm/ DN100	DN125- DN150
Unique SSV (elastomer) family							**Seat tool for elastomer - pos. 3**
Standard LongStroke Reverse acting (RA) Tangential Tank outlet Two-step RV-ST regulating ATEX versions	Not available	9613172901	9613172902	9613172902	9613172903	9613172903	Not needed
Unique 7000 (TR2) family							**Seat tool for TR2 (PTFE) - pos. 4**
Standard LongStroke Reverse acting (RA) Tangential Tank outlet Two-step 7710 and 7711 regulating ATEX versions	9613163206	9613163201	9613163202	9613163203	9613163204	9613163205	Not available
Unique SSV aseptic (elastomer) family/Unique 7000 aseptic (elastomer) family							**Seat tool for elastomer - pos. 3**
Standard Tangential Two step	9614060001	9614060002	9614060003	9614060003	9614060004	9614060004	Not available
Single seat valves							
Unique RV-P regulating	Not available	Not needed	Not needed	Not needed	Not needed	Not needed	Not available
Unique RV-P aseptic regulating							
Unique small single seat (elastomer)	Only size 12.7 and 19 mm (tool not needed)						
Unique small single seat (elastomer)	Only size ½" and 3/4" (tool not needed)						
i-SSV (elastomer)	Not needed	Not needed	Not needed	Not needed	Not needed	Not needed	Not needed
SRC (elastomer)	Not needed	Not needed	Not needed	Not needed	Not needed	Not needed	Not needed
ARC (elastomer)	Not needed	Not needed	Not needed	Not needed	Not needed	Not needed	Not available
							Seat tool for TR2 (PTFE) - pos. 4
U700 + U300 (TR2)	Not available	9635000164	9635000165	9635000166	9635000167	9635000168	Not available

Service tool for dismantling maintainable actuators (single seat valves)

Different actuator types for the Unique SSV and Unique 7000 valves

Actuator version can be ordered/configured either “fully maintainable” (no warning marked on actuator) or as a “non-maintainable” (warning marked on actuator).
In June 2016 the below change was implemented and the “removable yoke with bolts” version is thereby phased out and replaced by the “yoke without bolts” version.

NOTE
It is important to check for warnings marked on the actuator when servicing an actuator - see below table

Actuator type	**Non-maintainable actuator** Spring under load and **CANNOT** be opened 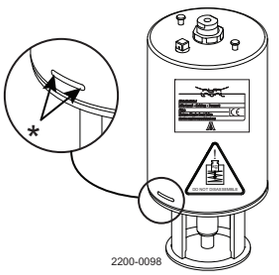 2200-0098 *) Lock wire opening is locked when warning is marked on actuator	**Fully maintainable actuator** Spring cage and can be opened 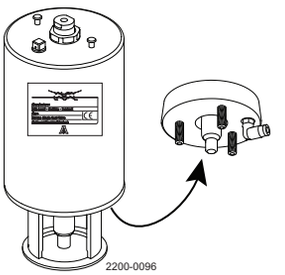 2200-0096	**Fully maintainable actuator** Spring cage and can be opened 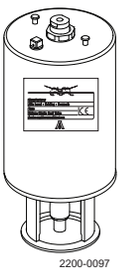 2200-0097
Yoke type	Non-removable yoke	“Removable yoke with bolts”. If the yoke with bolts is damaged it has to be replaced by the “yoke without bolts”	“Yoke without bolts”
Service	Not possible to service internally (it is not possible to change piston o-rings)	Yes	Yes
Marked with warnings	Yes	No	No
Year of production	From 2006	From 2006 to June 2016	From June 2016
	DANGER - do **NOT** use tool 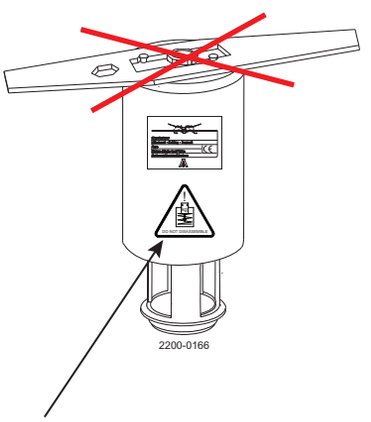 2200-0166 Warning lasermarked on actuator !! Actuator = non maintainable and cannot be services (dismantled/opened)	Tool can be used 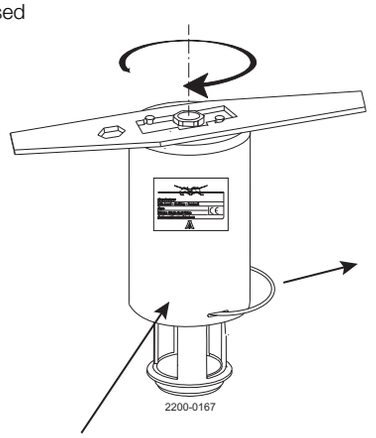 2200-0167 No warning lasermarked. SO actuator = maintable actuator	

Warning signs



Danger of injury (lasermarked on the actuator). Do **NOT** attempt to disassemble the actuator due to spring under load danger! (The lock wire opening is locked).

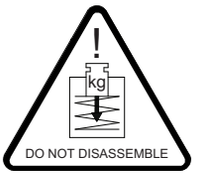

Danger of injury (an extra yellow label marked on the Unique SSV/7000 actuator from June 2016). Do **NOT** attempt to cut the actuator open due to spring under load. (The lock wire opening is locked).



Danger of injury (label marked on the actuator). Do **NOT** attempt to cut the Unique 7000 actuator open due to spring under load. (The lock wire opening is locked

Actuator version can be ordered/configured either “fully maintainable” (no warning marked on actuator) or as “non-maintainable” (warning marked on actuator).
The actuator can only be serviced (open and change the o-ring piston) if there is **NO** warning lasermarked on the actuator.

Non-maintainable actuator
* = lasermarked warning

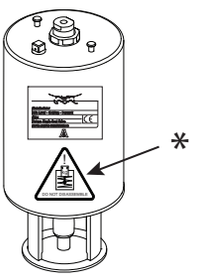

Fully maintainable actuator



Table 1

Valve type	Valve size						
	25 mm/DN25	38 mm/DN40	51 mm/DN50	63.5 mm/DN65	76.1 mm/DN80	101.6 mm/DN100	DN125 -DN150
Standard	Yes / no	Yes / no	Yes / no	Yes / no	Yes / no	Yes / no	Yes
Longstroke	Not available	No	No	No	No	No	Not available
High pressure	Yes / no	Yes / no	Yes / no	Yes / no	No	No	Not available
Aseptic family	Yes / no	Yes / no	Yes / no	Yes / no	Yes / no	Yes / no	Not available
Reverse acting	Yes / no	Yes / no	Yes / no	Yes / no	Yes / no	Yes / no	Not available
Tangential	Yes / no	Yes / no	Yes / no	Yes / no	Yes / no	Yes / no	Not available
Tank outlet	Yes / no	Yes / no	Yes / no	Yes / no	Yes / no	Yes / no	Not available
Two step	Yes	Yes	Yes	Yes	Yes	Yes	Not available
RV-ST regulating	Yes / no	Yes / no	Yes / no	Yes / no	Yes / no	Yes / no	Not available
7710 regulating	Yes / no	Yes / no	Yes / no	Yes / no	Yes / no	Yes / no	Not available
7711 regulating	Yes / no	Yes / no	Yes / no	Yes / no	Yes / no	Yes / no	Not available
ATEX versions	No	No	No	No	No	No	Not available
Unique RV-P regulating	Not available	Yes	Yes	Yes	Yes	Yes	Not available
Unique RV-P aseptic regulating	Not available	Yes	Yes	Yes	Yes	Yes	Not available
Unique small single seat valve (elastomer)	Only size ½”/12.7 mm and 3/4” 19 mm (only maintainable version)						

“Yes” = Fully maintainable and can be serviced (change the piston o-ring)
”No” = Non-maintainable and **cannot** be serviced

Service tool for dismantling maintainable actuators (single seat valves)

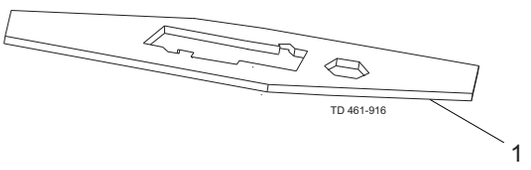

Service tool for maintainable actuator only

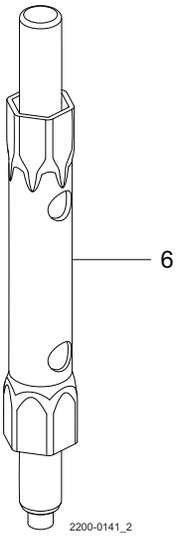

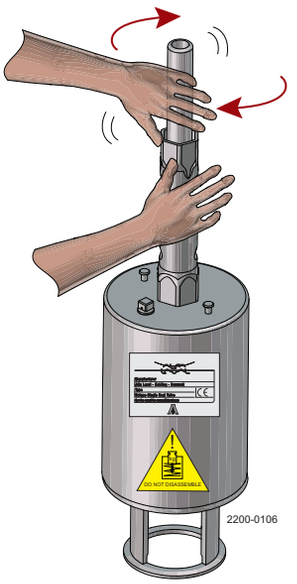

Tool for actuator bushing
(maintainable and non-maintainable actuators)

Valve type	Valve size						
	25 mm/ DN25	38 mm/ DN40	51 mm/ DN50	63.5 mm/ DN65	76.1 mm/ DN80	101.6 mm/ DN100	DN125 -DN150
Service tool for maintainable actuator only - pos 1							
Unique SSV (elastomer)* Unique 7000 (TR2)*	3135302191	3135302191	3135302191	3135302191	9612454001	9612454001	9612454001
Tool for actuator bushing (maintainable and non-maintainable actuators) - pos 6							
Unique SSV (elastomer)* Unique 7000 (TR2)*	9614198401	9614198401	9614198401	9614198401	9614198401	9614198401	Not needed
Service tool for maintainable actuator only - pos 1							
i-SSV (elastomer)	3135302191	3135302191	3135302191	3135302191	9612454001	9612454001	9612454001
Service tool for maintainable actuator only - pos 1							
SRC and ARC (elastomer)	3135302191	3135302191	3135302191	3135302191	9612454001	9612454001	9612454001
Service tool for maintainable actuator							
Unique RV-P regulating and Unique RV-P aseptic regulating	Not available	Not needed	Not needed	Not needed	Not needed	Not needed	Not available
Unique small single seat (elastomer)	Only size 12.7 mm and 19 mm (no tool needed)						
Unique 7000 small single seat (elastomer)	Only size ½" and 3/4" (tool not needed)						

* = all types - see table 1 on the previous page.

Not manufactured anymore

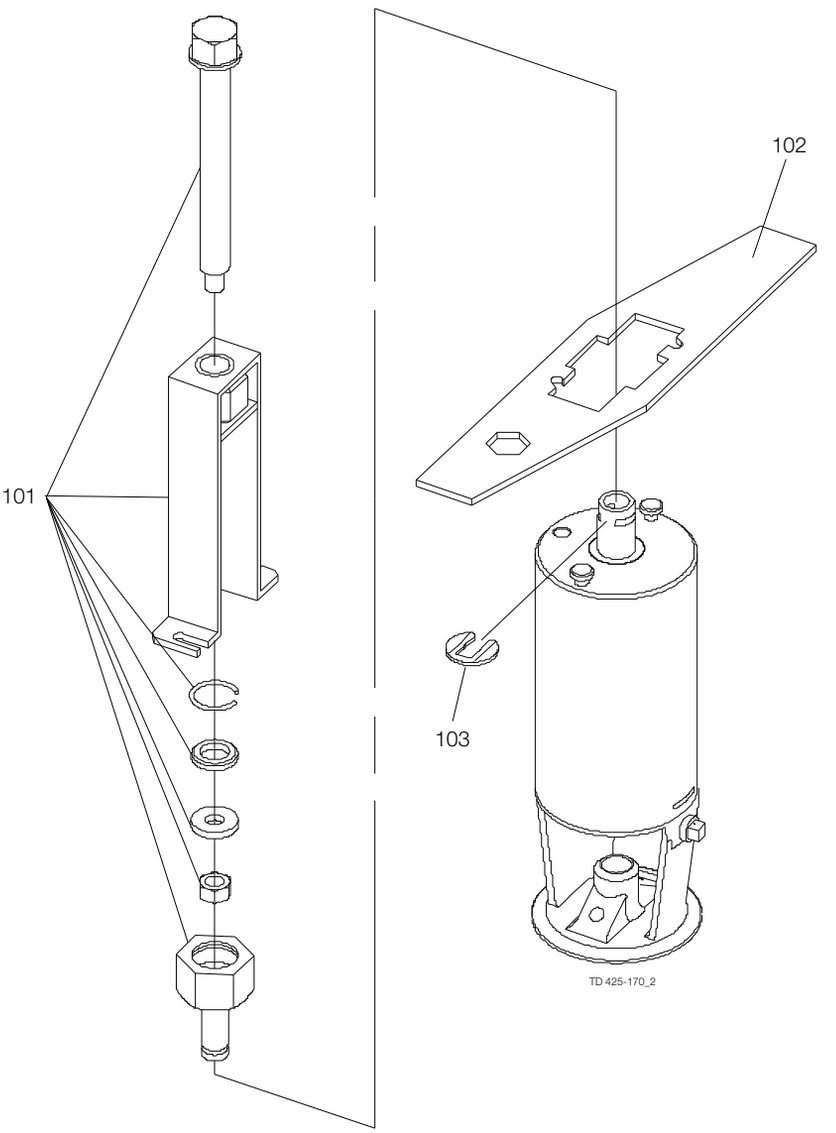

Pos	Qty	Denomination	
101	1	Lifting tool complete, SRC	3135308001
102	1	Turning tool	3135302191
103	1	Clip	3135307301

900095/0

Not manufactured anymore

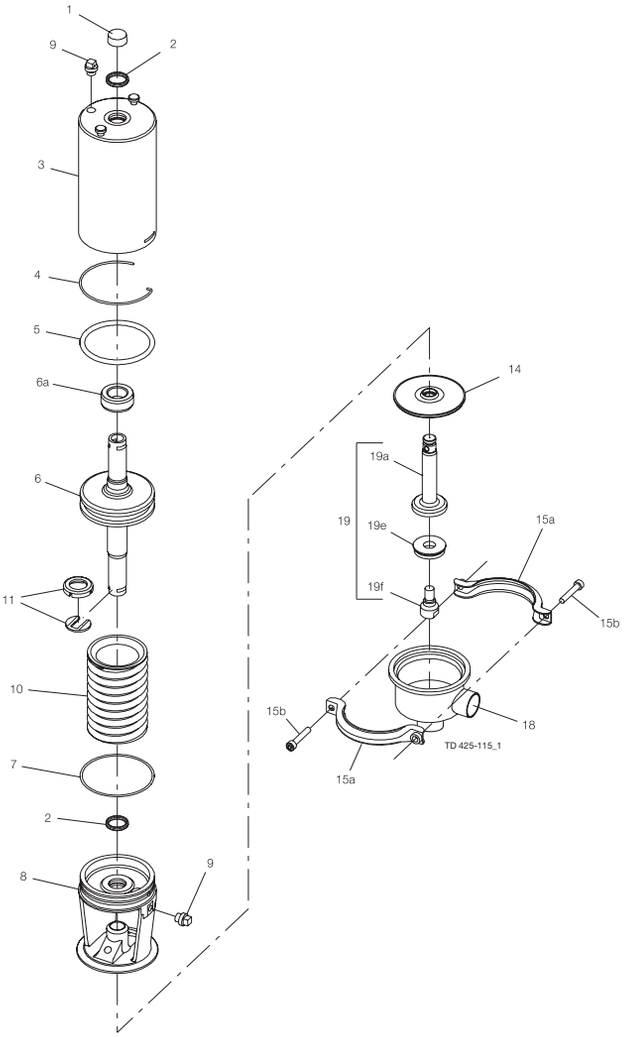

Alternative stem seal

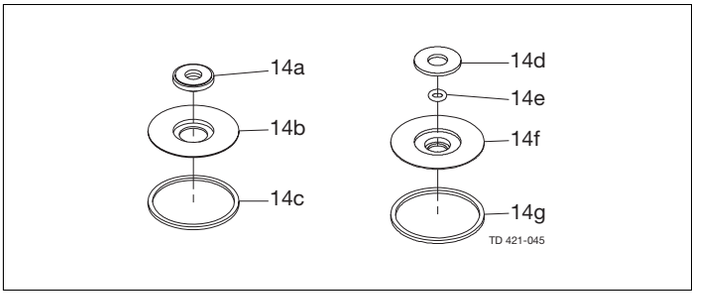

Special lip seal

Parts for FEP lip seal

Actuator

Pos		Qty	Denomination	DN 25 25 mm
			Actuator, -1, complete	9612608701
			Actuator, -2, complete	9612608702
			Actuator, -3, complete	9612608703
1		1	Cap	3180105256
2	□	2	O-ring	
3		1	Cylinder	3135301391
4	□	1	Lock Wire	
5	□	1	O-ring	
6		1	Piston, -1, -2	3135306211
		1	Piston, -3	3135306212
6a		1	Stop ring	9612602101
7	□	1	O-ring	
8		1	Bonnet	3135301331
9*		2	Plug	
10*		1	Spring assembly (black)	3135306251
11	□	1	Clip, complete	3135307931

* Only for actuator -1 and -2.

Valve body part

Pos		Qty	Denomination	DN25 25 mm
Stem seal				
14	♦	1	Lip seal, EPDM (standard)	
		1	Lip seal, HNBR	
		1	Lip seal, FPM	
Clamp				
15a+b		1	Clamps and screws	3132000273
Valve body				
18		1	Valve body, 2 ports ISO	9612598701
Valve plug				
19		1	Plug, single, complete EPDM (standard)	9612599801
19a		1	Stem	9612599501
19e	♦○	1	Plug seal, EPDM (standard)	
		1	Plug seal, NBR	
		1	Plug seal, FPM	
		1	Plug seal, PTFE	
19f		1	Screw	9612599701

Alternatives

Pos		Qty	Denomination	DN25 25 mm
Stem seal				
14		1	Lip seal kit, EPDM (standard)	9611920078
		1	Lip seal kit, NBR	9611920079
		1	Lip seal kit, FPM	9611920080
14a	○	1	Lip seal, EPDM	
		1	Lip seal, FPM	
14b		1	Plate	9612280501
14c	○	1	Seal ring, EPDM	
		1	Seal ring, NBR	
		1	Seal ring, FPM	
Stem seal				
14d		1	Washer	3135304521
14e	○	1	O-ring FEP/Silicone	
14f		1	Holder	3135304531
14g	○	1	Seal ring, PTFE	

Not manufactured anymore

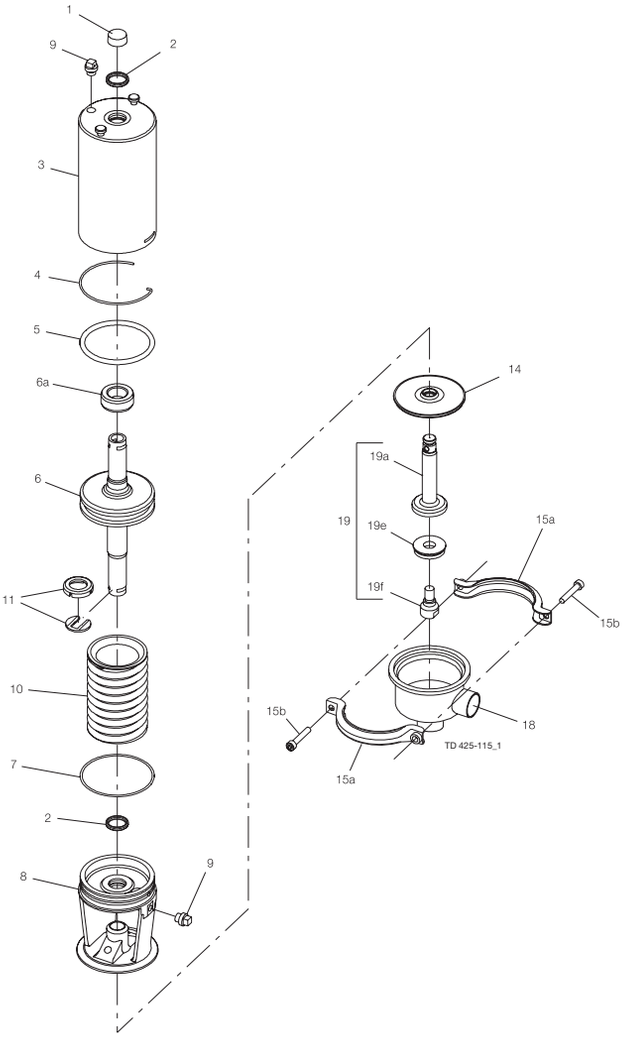

Alternative stem seal

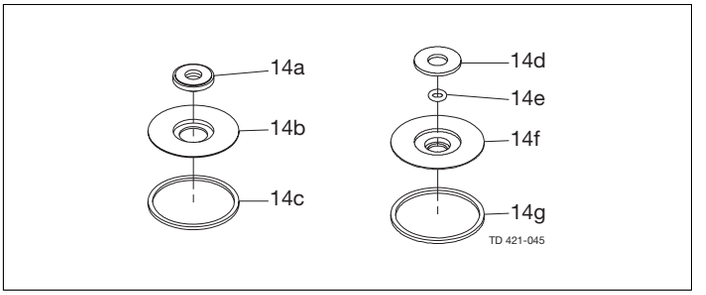

Special lip seal

Parts for FEP lip seal

Pos	Qty	Denomination	DN25 25 mm
Valve body with 0.8 RA finish inside			
	1	Valve body, 2 ports DIN	9612598803
	1	Valve body, 3 ports ISO	9612598704
	1	Valve body, 3 ports DIN	9612598804
Valve plug with 0.8 RA finish			
	1	Plug, single, complete NBR	9612599805
	1	Plug, single, complete FPM	9612599806
19a	1	Stem	3135310079
19f	1	Screw	

		DN25 25 mm
Service kit for actuator		
□	**Service kit**	**9611920008**
Service kit for product wetted parts, standard		
♦	**Service kit EPDM**	**9611920535**
♦	**Service kit NBR**	**9611920536**
♦	**Service kit FPM**	**9611920537**
Service kit for special lip seal		
○	**Service kit EPDM**	**9611920538**
○	**Service kit NBR**	**9611920539**
○	**Service kit FPM**	**9611920540**
○	**Service kit FEP**	**9611920541**

Parts marked with □♦○ are included in the service kits
Recommended spare parts: service kits.

900088/3

Not manufactured anymore

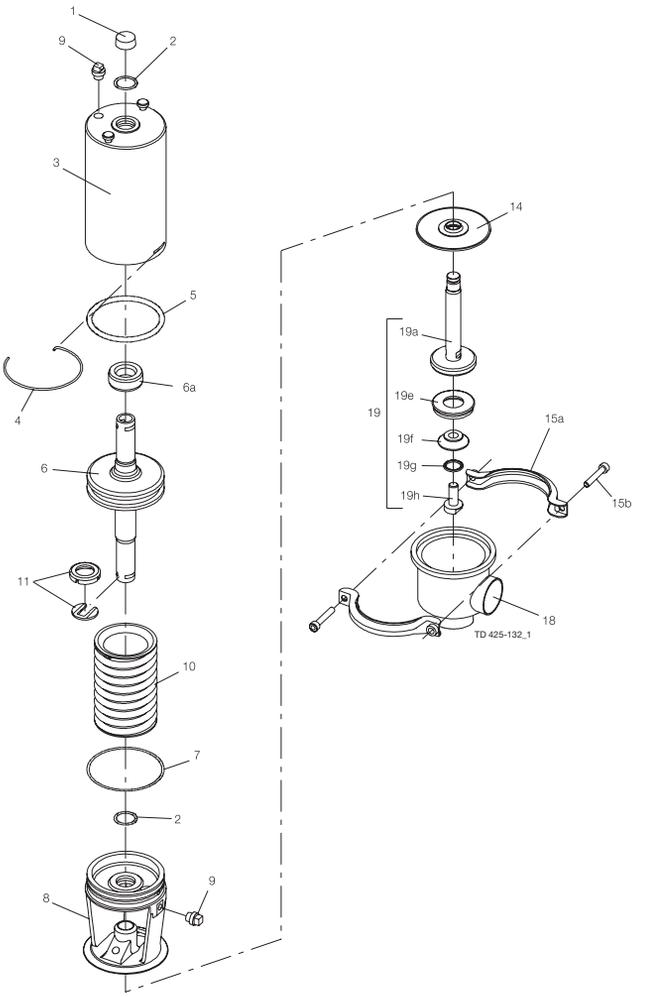

Alternative stem seal

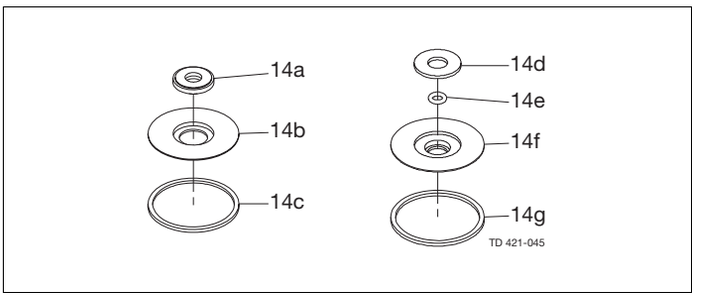

Special lip seal

Parts for FEP lip seal

Pos	Qty	Denomination	DN 40 38 mm	DN 50 51 mm	DN 65 63.5 mm	76 mm	DN 80	DN 100 101.6 mm
		Actuator, -1, complete	3135302061	3135302061	3135302061	3135302141	3135302141	3135302141
		Actuator, -2, complete	3135302062	3135302062	3135302062	3135302142	3135302142	3135302142
		Actuator, -3, complete	3135302063	3135302063	3135302063	3135302143	3135302143	3135302143
1	1	Cap	3180105256	3180105256	3180105256	3180105255	3180105255	3180105255
2 □	2	O-ring						
3	1	Cylinder	3135301391	3135301391	3135301391	3135301851	3135301851	3135301851
4 □	1	Lock wire						
5 □	1	O-ring						
6	1	Piston, -1, -2	3135306211	3135306211	3135306211	3135306191	3135306191	3135306191
	1	Piston, -3	3135306212	3135306212	3135306212			
6a	1	Stop ring (only for actuator-3)	3135312172	3135312172	3135312172			
7 □	1	O-ring						
8	1	Bonnet	3135301331	3135301331	3135301331	3135301901	3135301901	3135301901
9*	2	Plug						
10*	1	Spring assembly standard (black)	3135306251	3135306251	3135306251	3135306221	3135306221	3135306221
	1	Spring assembly with extra strong spring (white)	3135306252	3135306252	3135306252	3135306222	3135306222	3135306222
11 □	1	Clip, complete, (period 84.08-)	3135307931	3135307931	3135307931	3135307932	3135307932	3135307932
	1	Clip, (period 68.02 - 84.07)						

* Only for actuator -1 and -2.

Valve body part

Pos	Qty	Denomination	DN 40 38 mm	DN 50 51 mm	DN 65 63.5 mm	76 mm	DN 80	DN 100 101.6 mm
Stem seal								
14 ♦	1	Lip seal, EPDM						
	1	Lip seal, NBR						
	1	Lip seal, FPM						
Clamp								
15a+b	1	Clamps & screws, (period 9209-)	3132000273	3132000273	3132000273	3132000272	3132000272	3132000272
15a	2	Clamp half, (period -9209)						
15b	2	Screw, (period -9209)						
Valve body								
18	1	Valve body, 2 ports ISO	3135303751	3135303761	3135303801	3135303811		3135300261
	1	Valve body, 2 ports DIN		9612094101	9612094201		9612094301	9612094401
	1	Valve body, 3 ports ISO		3135303766	3135303806	3135303816		3135300266
	1	Valve body, 3 ports DIN		9612094102			9612094302	9612094402
Valve plug								
19	1	Plug, single, comp. EPDM (std)	3135303301	3135303311	3135303321	3135303331	3135303334	3135303341
19a	1	Stem	3135303401	3135303771	3135303781	3135303411	3135303412	3135303791
19e ♦○	1	Plug seal, EPDM (std)						
	1	Plug seal, NBR						
	1	Plug seal, FPM						
	1	Plug seal, PTFE						
19f	1	Washer	3135303571	3135303581	3135303591	3135303601	3135303602	3135303611
19g ♦○	1	O-ring, EPDM (std)						
	1	O-ring, NBR						
	1	O-ring, FPM						
	1	O-ring, PTFE						
19h	1	Screw	3135303621	3135303621	3135303621	3135303621	3135303621	3135303621

Not manufactured anymore

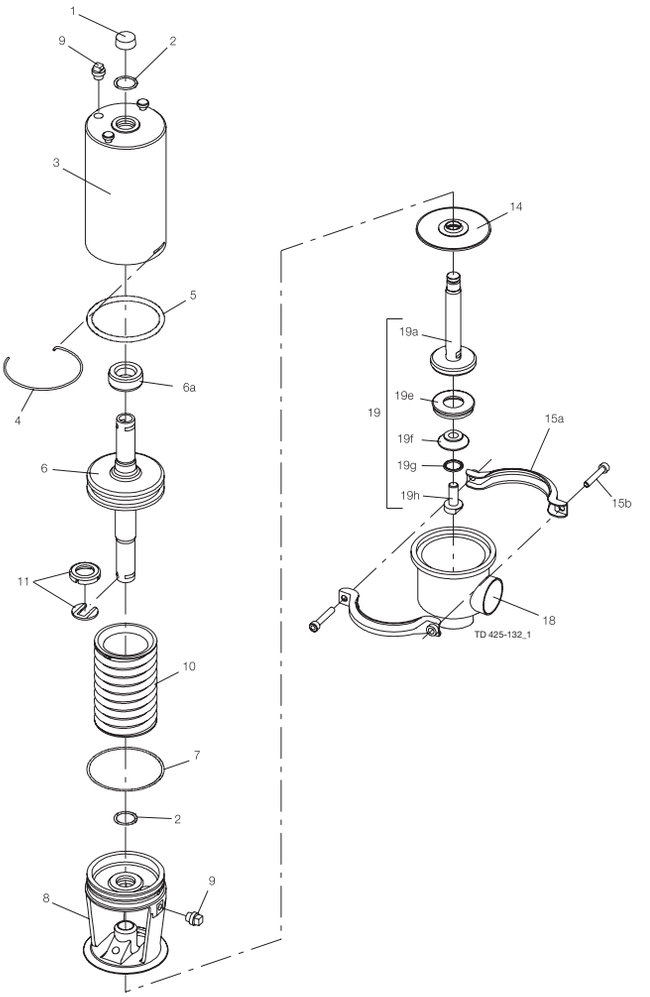

Alternative stem seal

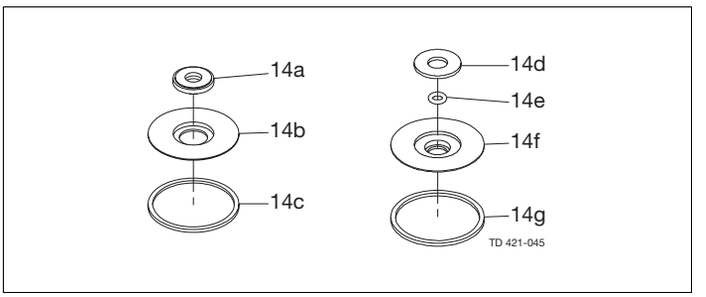

Special lip seal

Parts for FEP lip seal

Alternatives

Pos	Qty	Denomination	DN 40 38 mm	DN 50 51 mm	DN 65 63.5 mm	76 mm	DN 80	DN 100 101.6 mm
Special actuator complete								
Stem seal								
14	1	Lip seal kit, EPDM (std)	9611920078	9611920078	9611920078	9611920142	9611920142	9611920142
	1	Lip seal kit, NBR	9611920079	9611920079	9611920079	9611920143	9611920143	9611920143
	1	Lip seal kit, FPM	9611920080	9611920080	9611920080	9611920144	9611920144	9611920144
14a ○	1	Lip seal, EPDM						
	1	Lip seal, NBR						
	1	Lip seal, FPM						
14b	1	Plate	9612280501	9612280501	9612280501	9612308701	9612308701	9612308701
14c ○	1	Seal ring, EPDM						
	1	Seal ring, NBR						
	1	Seal ring, FPM						
Stem seal								
14d	1	Washer	3135304521	3135304521	3135304521	3135304522	3135304522	3135304522
14e ○	1	O-ring FEP/Silicone						
14f	1	Holder	3135304531	3135304531	3135304531	3135304541	3135304541	3135304541
14g ○	1	Seal ring, PTFE						

Pos	Qty	Denomination	DN 40 38 mm	DN 50 51 mm	DN 65 63.5 mm	76 mm	DN 80	DN 100 101.6 mm
Valve body with 0.8 RA finish inside								
18	1	Valve body, 2 ports ISO	3135303752		3135303802			
	1	Valve body, 2 ports DIN	9612094003					
	1	Valve body, 3 ports ISO						
	1	Valve body, 3 ports DIN	9612094004		9612094204		9612094304	9612094404
Valve plug with 0.8 RA finish								
19	1	Plug, single, comp. EPDM (std)		3135310911		3135310931		
	1	Plug, single, comp. NBR	3135310902	3135310912			3135310935	3135310942
	1	Plug, single, comp. FPM		3135310913	3135310923	3135310933	3135310936	
19a	1	Stem	3135310071		3135310073	3135310074	3135310078	
19f	1	Washer	3135310101	3135310102		3135310104	3135310106	
19h	1	Screw	3135310111	3135310111	3135310111	3135310111	3135310111	3135310111

		DN 40 38 mm	DN 50 51 mm	DN 65 63.5 mm	76 mm	DN 80	DN 100 101.6 mm
Service kit for actuator							
□	**Service kit**	**9611920008**	**9611920008**	**9611920008**	**9611920009**	**9611920009**	**9611920009**
Service kit for product wetted parts, standard							
♦	**Service kit EPDM**	**9611920010**	**9611920013**	**9611920016**	**9611920019**	**9611920105**	**9611920022**
♦	**Service kit NBR**	**9611920011**	**9611920014**	**9611920017**	**9611920020**	**9611920106**	**9611920023**
♦	**Service kit FPM**	**9611920012**	**9611920015**	**9611920018**	**9611920021**	**9611920107**	**9611920024**
Service kit for special lip seal							
○	**Service kit EPDM**	**9611920447**	**9611920451**	**9611920455**	**9611920459**	**9611920463**	**9611920467**
○	**Service kit NBR**	**9611920448**	**9611920452**	**9611920456**	**9611920460**	**9611920464**	**9611920468**
○	**Service kit FPM**	**9611920449**	**9611920453**	**9611920457**	**9611920461**	**9611920465**	**9611920469**
○	**Service kit FEP**	**9611920450**	**9611920454**	**9611920458**	**9611920462**	**9611920466**	**9611920470**

Parts marked with □♦○ are included in the service kits
Recommended spare parts: service kits.

900089/3

Not manufactured anymore

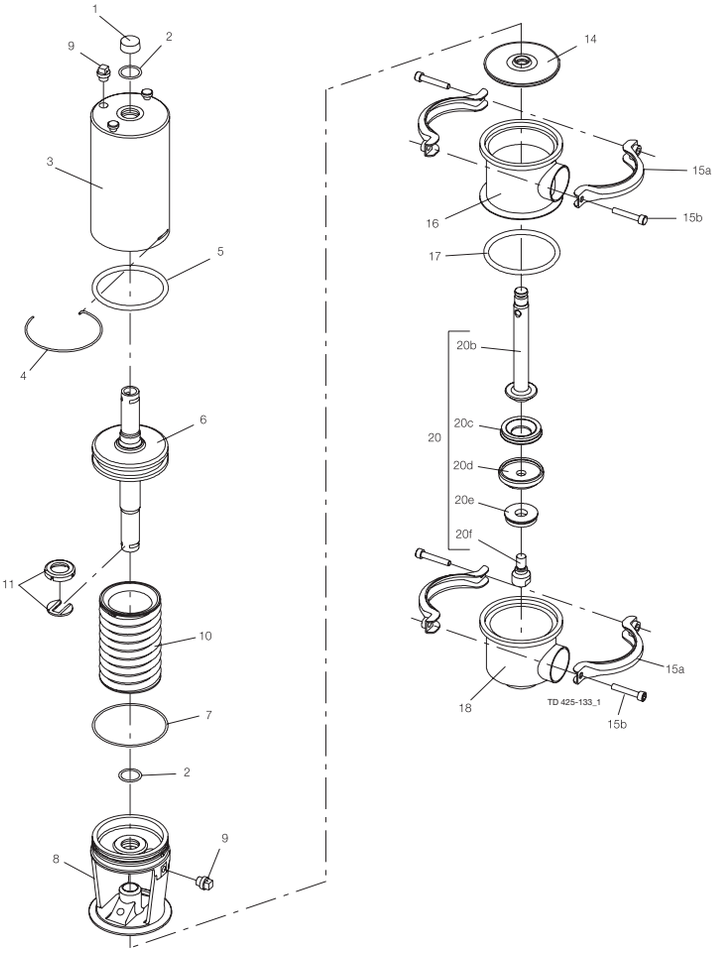

Alternative stem seal

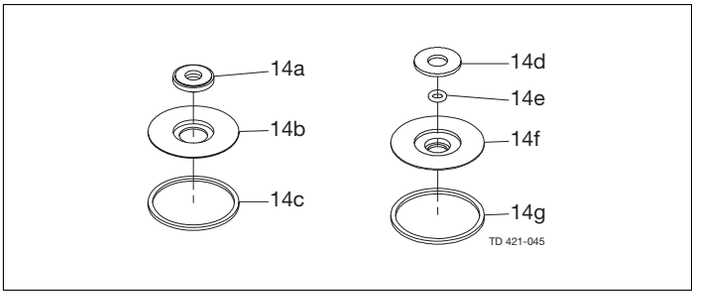

Special lip seal

Parts for FEP lip seal

Pos		Qty	Denomination	DN 25 25 mm
			Actuator, -1, complete	3135302061
			Actuator, -2, complete	3135302062
			Actuator, -3, complete	3135302063
1		1	Cap	3180105256
2	□	2	O-ring	
3		1	Cylinder	3135301391
4	□	1	Lock Wire	
5	□	1	O-ring	
6		1	Piston, -1, -2	3135306211
		1	Piston, -3	3135306212
7	□	1	O-ring	
8		1	Bonnet	3135301331
9*		2	Plug	
10*		1	Spring assembly, standard (black)	3135306251
11	□	1	Clip, complete	3135307931

* Only for actuator -1 and -2.

Valve body part

Pos		Qty	Denomination	DN 25 25 mm
Stem seal				
14	♦	1	Lip seal, EPDM (standard)	
		1	Lip seal, HNBR	
		1	Lip seal, FPM	
Clamp				
15a+b		2	Clamps and screws (period 9209-)	3132000273
Valve body				
16		1	Valve body, upper, 1 port ISO	9612599101
		1	Valve body, upper, 2 ports ISO	9612599102
		1	Valve body, upper, 2 ports DIN	9612599202
17	♦○	1	Seal ring, EPDM (standard)	
		1	Seal ring, NBR	
		1	Seal ring, FPM	
		1	Seal ring, PTFE	
18		1	Valve body, lower, 2 ports ISO	9612598701
Valve plug				
20		1	Plug, double, complete EPDM (standard)	9612600601
		1	Plug, double, complete FPM	
20b		1	Stem	9612600401
20c	♦○	1	Plug seal, upper, EPDM (standard)	
		1	Plug seal, upper, NBR	
		1	Plug seal, upper, FPM	
		1	Plug seal, upper, PTFE	
20d		1	Middle piece	
20e	♦○	1	Plug seal, lower, EPDM (standard)	
		1	Plug seal, lower, NBR	
		1	Plug seal, lower, FPM	
		1	Plug seal, lower, PTFE	
20f		1	Screw	9612599701

Not manufactured anymore

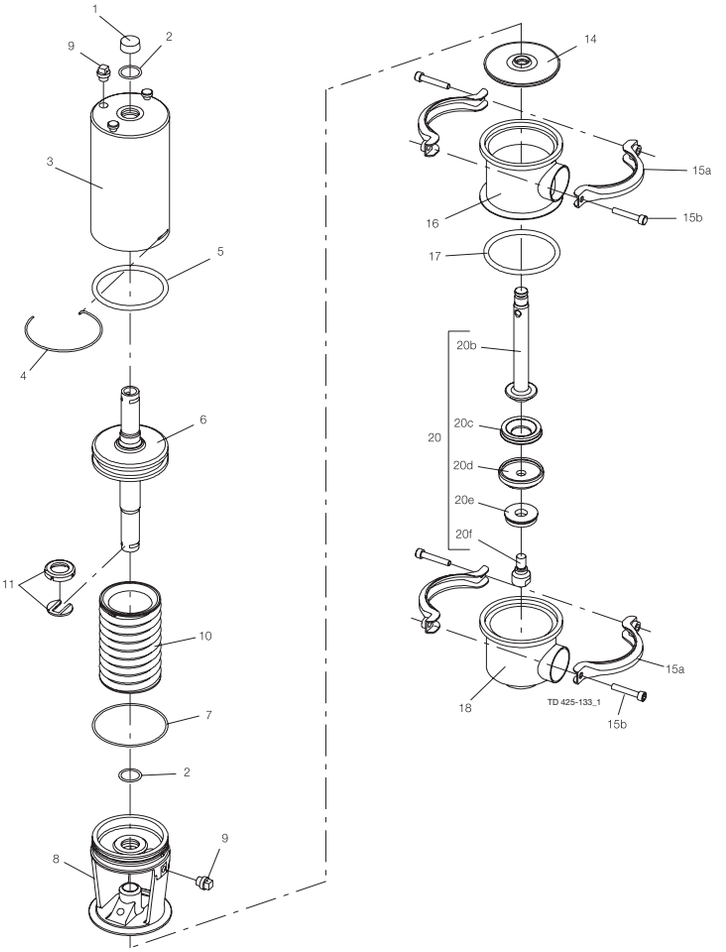

Alternative stem seal

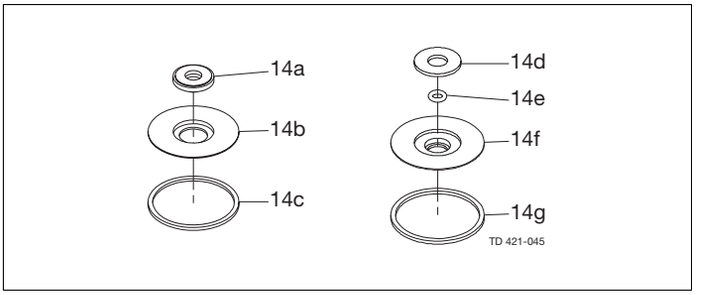

Special lip seal

Parts for FEP lip seal

Alternatives

Pos	Qty	Denomination	DN 25 25 mm
Stem seal			
14	1	Lip seal kit, EPDM (standard)	9611920078
	1	Lip seal kit, NBR	9611920079
	1	Lip seal kit, FPM	9611920080
14a ○	1	Lip seal, EPDM	
	1	Lip seal, NBR	
	1	Lip seal, FPM	
14b	1	Plate	9612280501
14c ○	1	Seal ring, EPDM	
	1	Seal ring, NBR	
	1	Seal ring, FPM	
Stem seal			
14d	1	Washer	3135304521
14e ○	1	O-ring FEP/Silicone	
14f	1	Holder	3135304531
14g ○	1	Seal ring, PTFE	

Pos	Qty	Denomination	DN 25 25 mm
Valve body with 0.8 RA finish inside			
16	1	Valve body, upper, 1 port ISO	9612599103
	1	Valve body, upper, 1 port DIN	9612599203
	1	Valve body, upper, 2 ports DIN	9612599204
	1	Valve body, lower, 2 ports DIN	9612598803
	1	Valve body, lower, 3 ports ISO	9612598704
	1	Valve body, lower, 3 ports DIN	9612598804
Valve plug with 0.8 RA finish			
	1	Plug, double,complete NBR	9612600605
	1	Plug, double,complete FPM	9612600606
20b	1	Stem	3135310089
20d	1	Middle piece	9612600502
20f	1	Screw	

	Denomination	DN 25 25 mm
Service kit for actuator		
□	**Service kit**	**9611920008**
Service kit for product wetted parts, standard		
♦	**Service kit EPDM**	**9611920542**
♦	**Service kit NBR**	**9611920543**
♦	**Service kit FPM**	**9611920544**
Service kit for special lip seal		
○	**Service kit EPDM**	**9611920545**
○	**Service kit NBR**	**9611920546**
○	**Service kit FPM**	**9611920547**
○	**Service kit FEP**	**9611920548**

Parts marked with □♦○ are included in the service kits.
Recommended spare parts: service kits.

900091/3

Not manufactured anymore

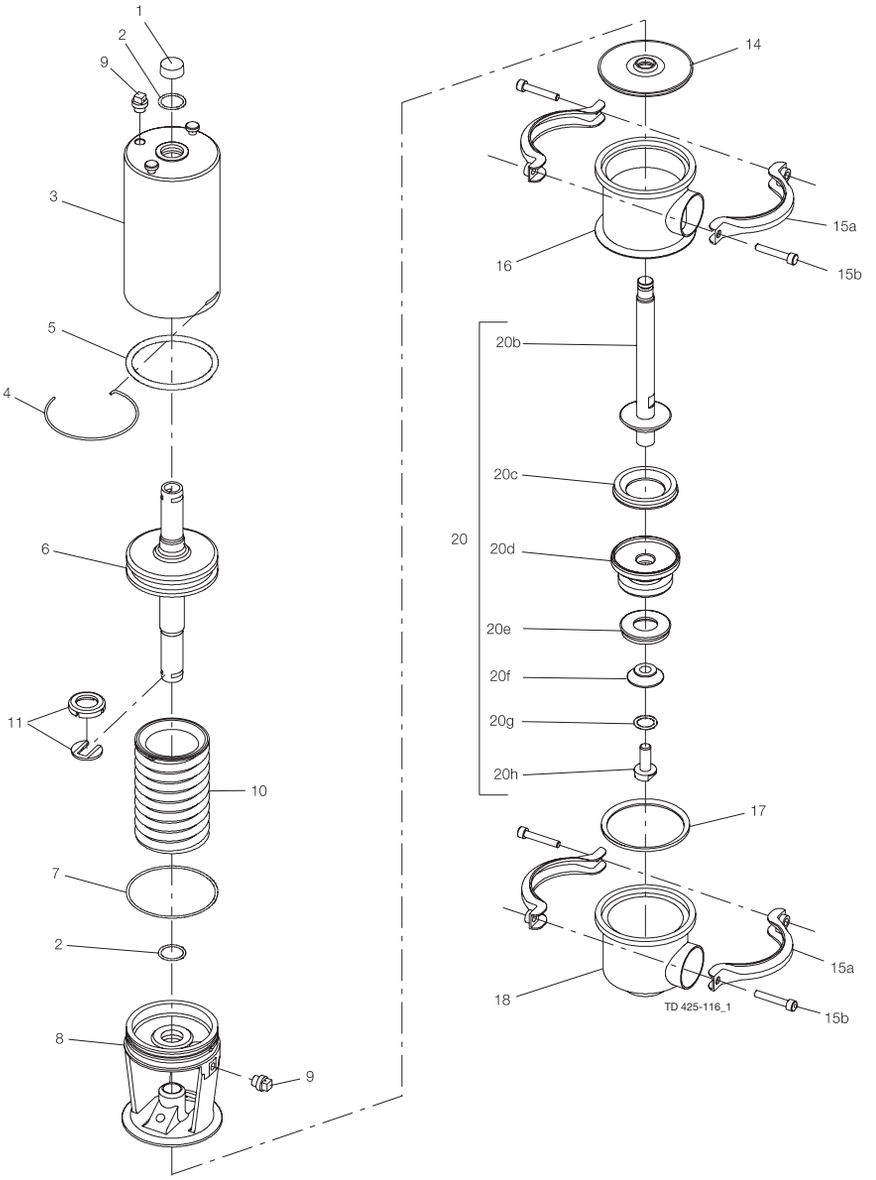

Alternative stem seal

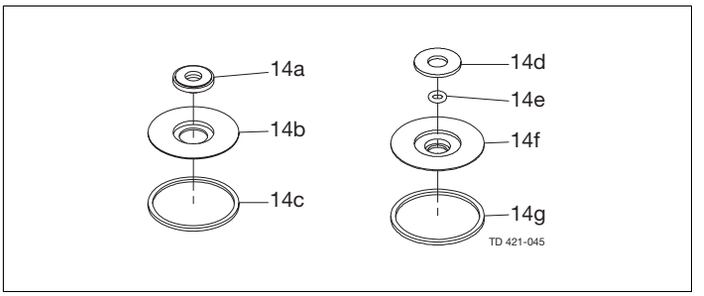

Special lip seal

Parts for FEP lip seal

Actuator

Pos		Qty	Denomination	DN 40 38 mm	DN 50 51 mm	DN 65 63.5 mm	76 mm	DN 80	DN 100 101.6 mm
			Actuator, -1, complete	3135302061	3135302061	3135302061	3135302141	3135302141	3135302141
			Actuator, -2, complete	3135302062	3135302062	3135302062	3135302142	3135302142	3135302142
			Actuator, -3, complete	3135302063	3135302063	3135302063	3135302143	3135302143	3135302143
1		1	Cap	3180105256	3180105256	3180105256	3180105255	3180105255	3180105255
2	□	2	O-ring						
3		1	Cylinder	3135301391	3135301391	3135301391	3135301851	3135301851	3135301851
4	□	1	Lock wire						
5	□	1	O-ring						
6		1	Piston, -1, -2	3135306211	3135306211	3135306211	3135306191	3135306191	3135306191
		1	Piston, -3	3135306212	3135306212	3135306212			
7	□	1	O-ring						22340617
8		1	Bonnet	3135301331	3135301331	3135301331	3135301901	3135301901	3135301901
9*		2	Plug						
10*		1	Spring assembly, standard (black)	3135306251	3135306251	3135306251	3135306221	3135306221	3135306221
		1	Spring assembly with extra strong spring (white)	3135306252	3135306252	3135306252	3135306222	3135306222	3135306222
11	□	1	Clip, complete (period 84.08-)	3135307931	3135307931	3135307931	3135307932	3135307932	3135307932
		1	Clip, (period 68.02 - 84.07)						

* Only for actuator -1 and -2.

Valve body part

Pos		Qty	Denomination	DN 40 38 mm	DN 50 51 mm	DN 65 63.5 mm	76 mm	DN 80	DN 100 101.6 mm
Stem seal									
14	♦	1	Lip seal, EPDM (std)						
		1	Lip seal, NBR						
		1	Lip seal, FPM						
Clamp									
15a+b		2	Clamps & screws (period 9209-)	3132000273	3132000273	3132000273	3132000272	3132000272	3132000272
15a		4	Clamp half (period -9209)						
15b		4	Screw (period -9209)						
Valve body									
16		1	Valve body, upper, 1 port ISO	3135300531	3135300541	3135300551	3135300561		3135300581
		1	Valve body, upper, 1 port DIN			9612094701		9612094801	9612094901
		1	Valve body, upper, 2 ports ISO	3135300536	3135300546	3135300556			3135300586
		1	Valve body, upper, 2 ports DIN	9612094502	9612094602				9612094902
17	♦○	1	Seal ring, EPDM (std)						
		1	Seal ring, NBR						
		1	Seal ring, FPM						
		1	Seal ring, PTFE						
18		1	Valve body, lower, 2 ports ISO	3135303751	3135303761	3135303801	3135303811		3135300261
		1	Valve body, lower, 2 ports DIN		9612094101	9612094201		9612094301	9612094401
		1	Valve body, lower, 3 ports ISO		3135303766	3135303806	3135303816		3135300266
		1	Valve body, lower, 3 ports DIN		9612094102			9612094302	9612094402
Valve plug									
20		1	Plug, double, comp. EPDM (std)	3135303351	3135303361	3135303371	3135303381	3135303384	3135303391
		1	Plug, double, comp. NBR		3135303362		3135303382		
20b		1	Stem	3135303491	3135303492	3135303493	3135303501	3135303503	3135303502
20c	♦○	1	Plug seal, upper, EPDM (std)						
		1	Plug seal, upper, NBR						
		1	Plug seal, upper, FPM						
		1	Plug seal, upper, PTFE						
20d		1	Middle piece	3135303631	3135303641	3135303651	3135303661	9612098401	3135303671
20e	♦○	1	Plug seal, lower, EPDM (std)						
		1	Plug seal, lower, NBR						
		1	Plug seal, lower, FPM						
		1	Plug seal, lower, PTFE						
20f		1	Washer	3135303571	3135303581	3135303591	3135303601	3135303602	3135303611
20g	♦○	1	O-ring, EPDM (std)						
		1	O-ring, NBR						
		1	O-ring, FPM						
		1	O-ring, PTFE						
20h		1	Screw	3135303621	3135303621	3135303621	3135303621	3135303621	3135303621

Not manufactured anymore

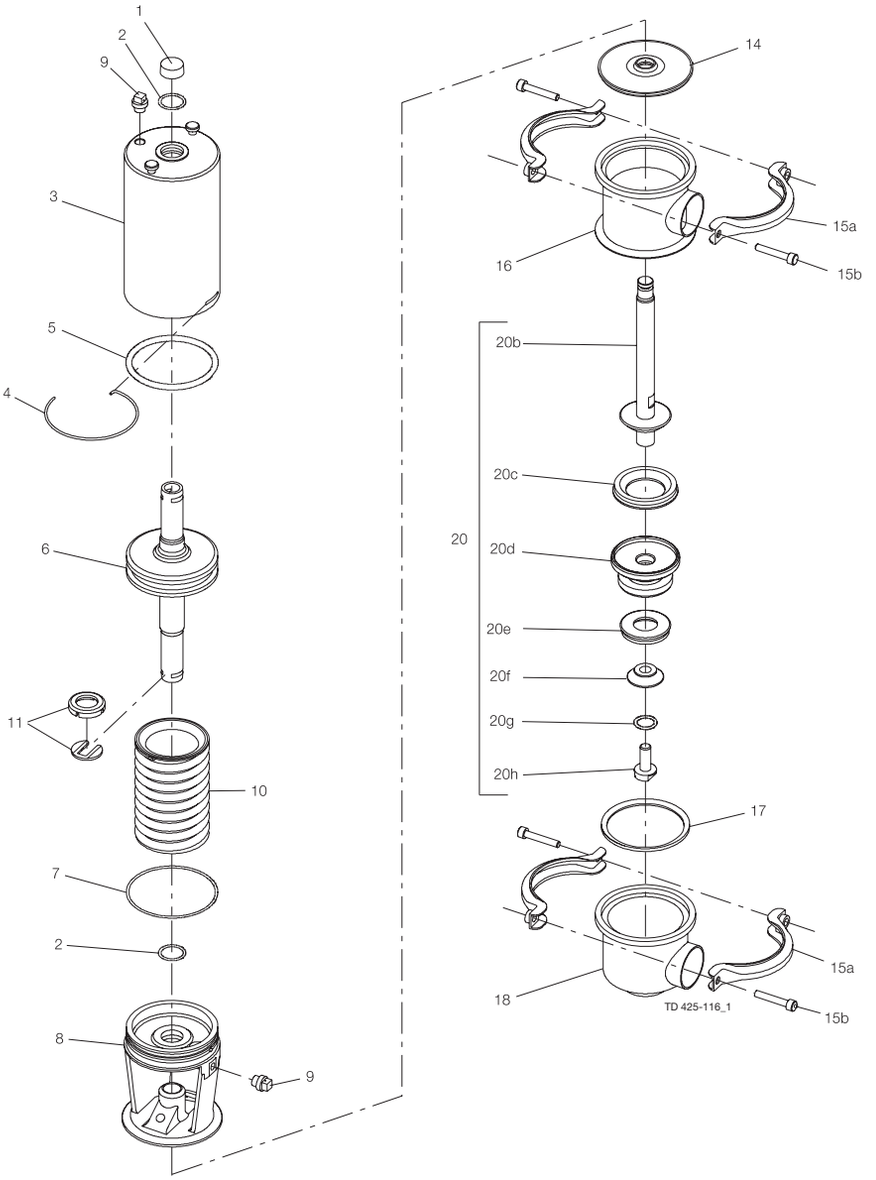

Alternative stem seal

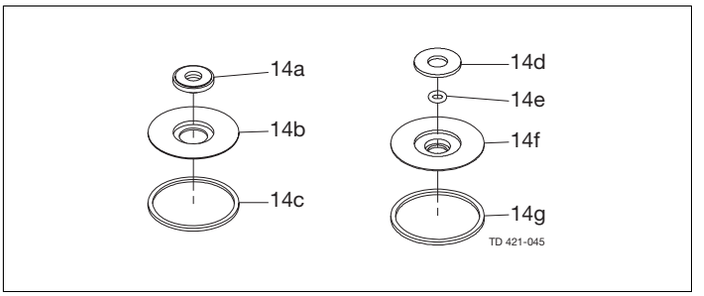

Special lip seal

Parts for FEP lip seal

Alternatives

Pos	Qty	Denomination	DN 40 38 mm	DN 50 51 mm	DN 65 63.5 mm	76 mm	DN 80	DN 100 101.6 mm
Special actuator complete								
Stem seal								
14	1	Lip seal kit, EPDM (std)	9611920078	9611920078	9611920078	9611920142	9611920142	9611920142
	1	Lip seal kit, NBR	9611920079	9611920079	9611920079	9611920143	9611920143	9611920143
	1	Lip seal kit, FPM	9611920080	9611920080	9611920080	9611920144	9611920144	9611920144
14a ○	1	Lip seal, EPDM						
	1	Lip seal, NBR						
	1	Lip seal, FPM						
14b	1	Plate	9612280501	9612280501	9612280501	9612308701	9612308701	9612308701
14c ○	1	Seal ring, EPDM						
	1	Seal ring, NBR						
	1	Seal ring, FPM						
Stem seal								
14d	1	Washer	3135304521	3135304521	3135304521	3135304522	3135304522	3135304522
14e ○	1	O-ring FEP/silicone						
14f	1	Holder	3135304531	3135304531	3135304531	3135304541	3135304541	3135304541
14g ○	1	Seal ring, PTFE						

Pos	Qty	Denomination	DN 40 38 mm	DN 50 51 mm	DN 65 63.5 mm	76 mm	DN 80	DN 100 101.6 mm
Valve body with 0.8 RA finish inside								
16	1	Valve body, upper, 1 port ISO				3135300562		
	1	Valve body, upper, 1 port DIN	9612094503		9612094703		9612094803	9612094903
	1	Valve body, upper, 2 ports ISO						3135300583
	1	Valve body, upper, 2 ports DIN	9612094504	9612094604	9612094704		9612094804	
18	1	Valve body, lower, 2 ports ISO	3135303752		3135303802			
	1	Valve body, lower, 2 ports DIN	9612094003					
	1	Valve body, lower, 3 ports ISO						
	1	Valve body, lower, 3 ports DIN	9612094004		9612094204		9612094304	9612094404
Valve plug with 0.8 RA finish								
20	1	Plug, double,comp. EPDM (std)				3135310981	3135310984	
	1	Plug, double,comp. NBR	3135310952	3135310962	3135310972	3135310982	3135310985	3135310992
	1	Plug, double,comp. FPM	3135310953	3135310963	3135310973	3135310983	3135310986	3135310993
20b	1	Stem	3135310081	3135310082	3135310083	3135310084		
20d	1	Middle piece	3135310091	3135310092			9612100906	3135310095
20f	1	Washer	3135310101	3135310102		3135310104	3135310106	
20h	1	Screw	3135310111	3135310111	3135310111	3135310111	3135310111	3135310111

	Denomination	DN 40 38 mm	DN 50 51 mm	DN 65 63.5 mm	76 mm	DN 80	DN 100 101.6 mm
Service kit for actuator							
□	**Service kit**	**9611920008**	**9611920008**	**9611920008**	**9611920009**	**9611920009**	**9611920009**
Service kit for product wetted part, standard							
♦	**Service kit EPDM**	**9611920025**	**9611920028**	**9611920031**	**9611920034**	**9611920108**	**9611920037**
♦	**Service kit NBR**	**9611920026**	**9611920029**	**9611920032**	**9611920035**	**9611920109**	**9611920038**
♦	**Service kit FPM**	**9611920027**	**9611920030**	**9611920033**	**9611920036**	**9611920110**	**9611920039**
Service kit for special lip seal							
○	**Service kit EPDM**	**9611920471**	**9611920475**	**9611920479**	**9611920483**	**9611920487**	**9611920491**
○	**Service kit NBR**	**9611920472**	**9611920476**	**9611920480**	**9611920484**	**9611920488**	**9611920492**
○	**Service kit FPM**	**9611920473**	**9611920477**	**9611920481**	**9611920485**	**9611920489**	**9611920493**
○	**Service kit FEP**	**9611920474**	**9611920478**	**9611920482**	**9611920486**	**9611920490**	**9611920494**

Parts marked with □♦○ are included in the service kits.
Recommended spare parts: service kits.

900092/3

Not manufactured anymore

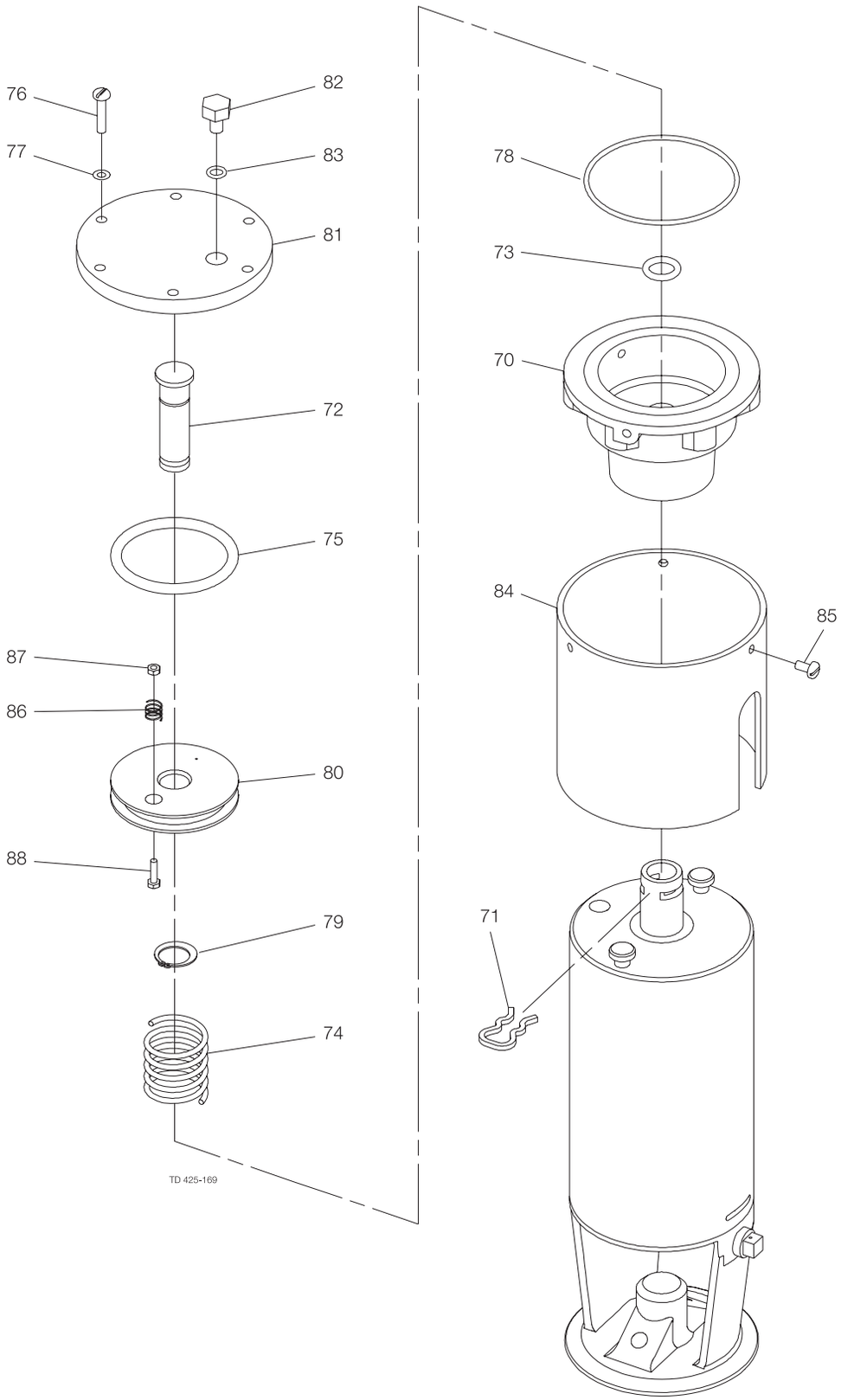

Pos	Qty	Denomination	3135303952 38 - 63.5 mm	3135303953 76 - 101.6 mm
70	1	Housing		
71	1	Clip		
72	1	Piston rod		
73	1	O-ring, NBR	22340433	22340433
74	1	Spring		
75	1	O-ring, NBR	42153	42153
76	6	Screw		
77	6	Washer		
78	1	O-ring, NBR	22340676	22340676
79	1	Lock ring	22364112	22364112
80	1	Piston		
81	1	Cover		
82	1	Plug		
83	1	O-ring	22340326	22340326
84	1	Protective hood		
85	3	Screw	22112148	22112148
86	1	Spring		
87	1	Nut		
88	1	Screw		

900096/2

Not manufactured anymore

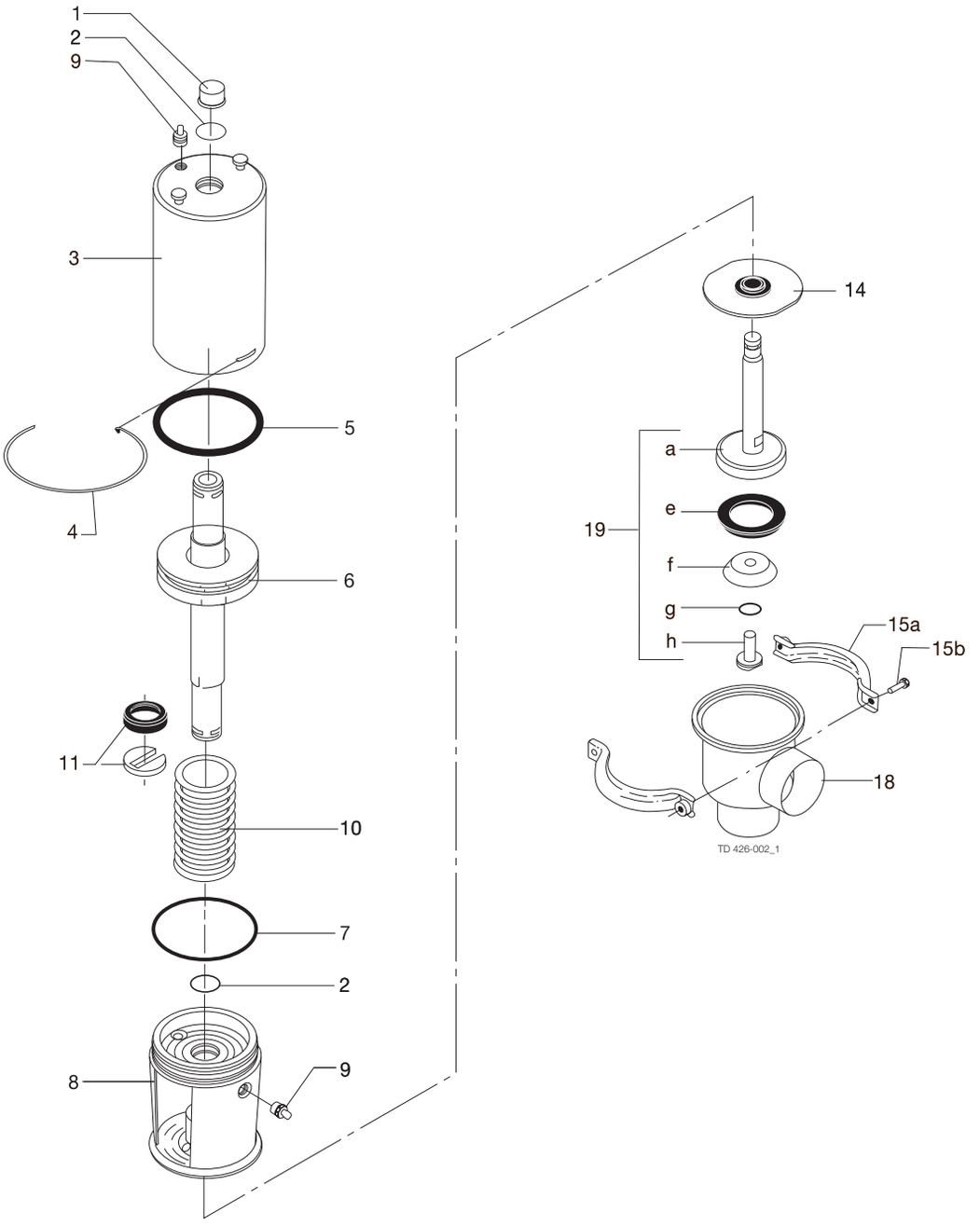

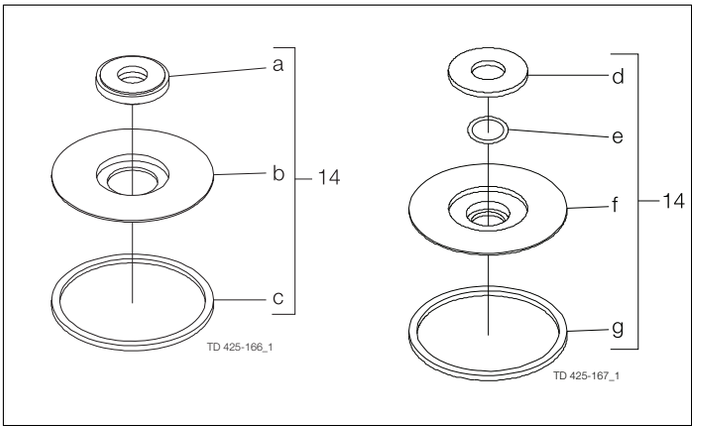

Alternatives stem seal

Parts for FEP seal

Actuator

Pos		Qty	Denomination	DN 50 51 mm	DN 65 63.5 mm	76 mm	DN 80	DN 100 101.6 mm
			Actuator, -1, complete					
			Actuator, -2, complete					
			Actuator, -3, complete					
1		1	Cap	3180105256	3180105255	3180105255	3180105255	3180105255
2	□	2	O-ring					
3		1	Cylinder					
4	□	1	Lock wire					
5	□	1	O-ring					
6		1	Piston		9612123001	9612123001	9612123001	9612123001
7	□	1	O-ring					
9*		2	Plug					
10*		1	Spring assembly					
11	□	1	Clip, compl	3135307931	3135307932	3135307932	3135307932	3135307932

* Only for actuator -1 and -2.

Valve body part

Pos	Qty	Denomination	DN 50 51 mm	DN 65 63.5 mm	76 mm	DN 80	DN 100 101.6 mm
Stem seal							
14 ♦	1	Lip seal, EPDM (standard)					
	1	Lip seal, NBR					
	1	Lip seal, FPM					
Clamp							
15a+b	1	Clamps and screws (period 9209-)	3132000271	3132000271	3132000272	3132000272	3132000272
15a	2	Clamp half (period -9209)					
15b	2	Screw (period -9209)					
Valve body							
18	1	Valve body, 2 ports ISO	3135303761	3135303801	3135303811		3135300261
	1	Valve body, 2 ports DIN	9612094101	9612094201		9612094301	9612094401
	1	Valve body, 3 ports ISO	3135303766	3135303806	3135303816		3135300266
	1	Valve body, 3 ports DIN	9612094102			9612094302	9612094402
Valve plug							
	1	Plug, single,complete NBR	9612125504	9612125404	9612125304	9612125308	9612125204
	1	Plug, single,complete FPM				9612125309	
19a	1	Stem					9612125602
19e ♦○	1	Plug seal, EPDM (standard)					
	1	Plug seal, NBR					
	1	Plug seal, FPM					
	1	Plug seal, PTFE					
19f	1	Washer	3135303581	3135303591	3135303601	3135303602	3135303611
19g ♦○	1	O-ring, EPDM (standard)					
	1	O-ring, NBR					
	1	O-ring, FPM					
	1	O-ring, PTFE					
19h	1	Screw	3135303621	3135303621	3135303621	3135303621	3135303621

Not manufactured anymore

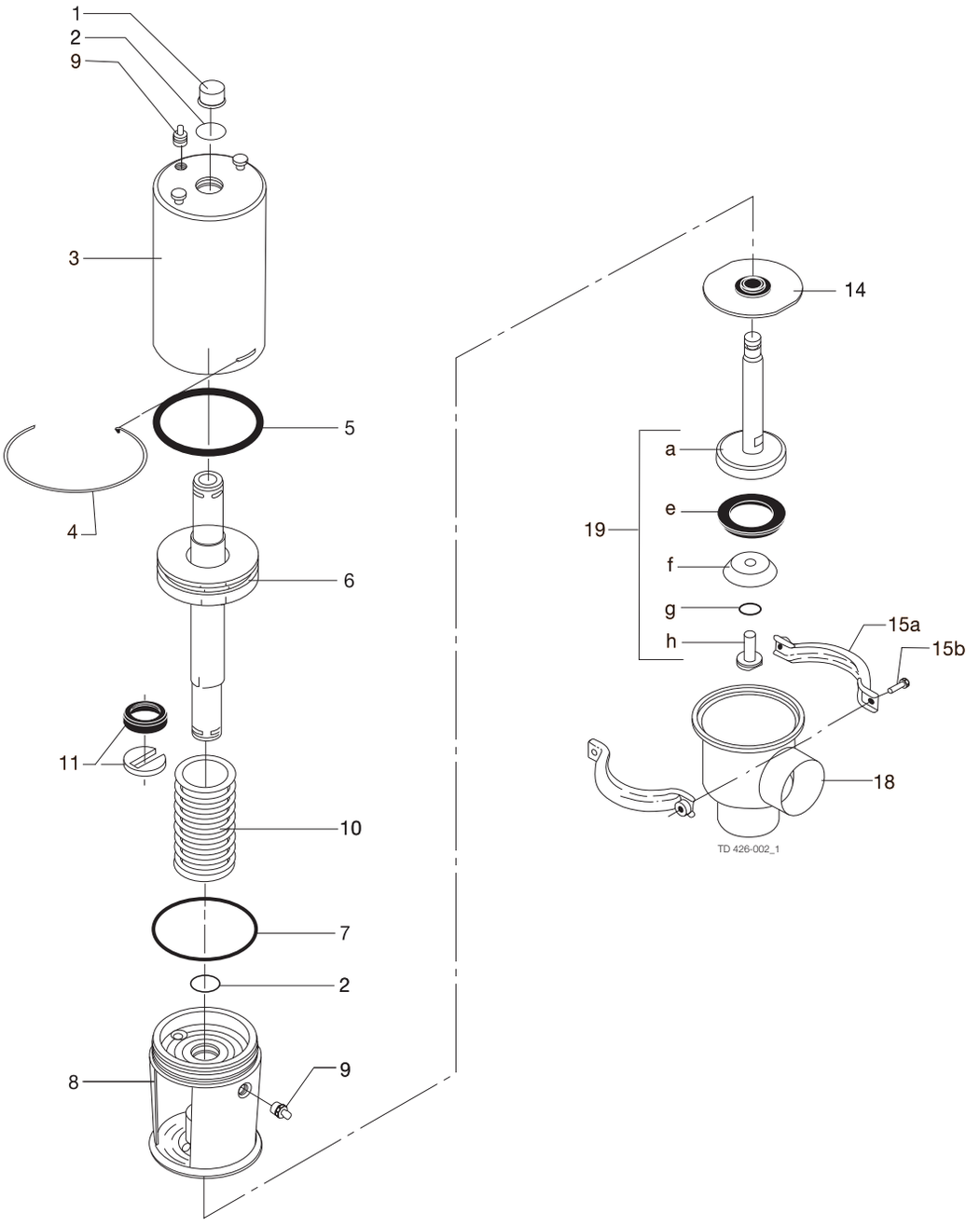

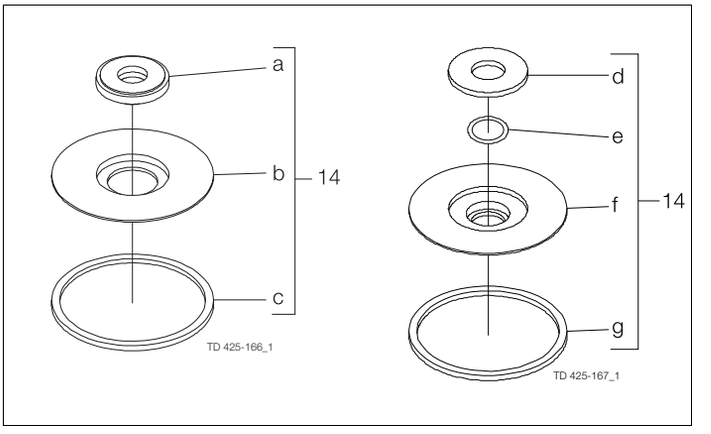

Alternatives stem seal

Parts for FEP seal

Alternatives

Pos	Qty	Denomination	DN 50 51 mm	DN 65 63.5 mm	76 mm	DN 80	DN 100 101.6 mm
Stem seal							
14	1	Lip seal kit, EPDM (standard)	9611920078	9611920078	9611920142	9611920142	9611920142
	1	Lip seal kit, NBR	9611920079	9611920079	9611920143	9611920143	9611920143
	1	Lip seal kit, FPM	9611920080	9611920080	9611920144	9611920144	9611920144
14a ○	1	Lip seal, EPDM					
	1	Lip seal, NBR					
	1	Lip seal, FPM					
14b	1	Plate	9612280501	9612280501	9612308701	9612308701	9612308701
14c ○	1	Seal ring, EPDM					
	1	Seal ring, NBR					
	1	Seal ring, FPM					
Stem seal							
14d	1	Washer	3135304521	3135304521	3135304522	3135304522	3135304522
14e ○	1	O-ring FEP/Silicone					
14f	1	Holder	3135304531	3135304531	3135304541	3135304541	3135304541
14g ○	1	Seal ring, PTFE					

		DN 50 51 mm	DN 65 63.5 mm	76 mm	DN 80	DN 100 101.6 mm
Service kit for actuator						
□	**Service kit**	9611920008	9611920008	9611920009	9611920009	9611920009
Service kit for product wetted parts, standard						
♦	**Service kit EPDM**	9611920013	9611920016	9611920019	9611920105	9611920022
♦	**Service kit NBR**	9611920014	9611920017	9611920020	9611920106	9611920023
♦	**Service kit FPM**	9611920015	9611920018	9611920021	9611920107	9611920024
Service kit for special lip seal						
○	**Service kit EPDM**	9611920451	9611920455	9611920459	9611920463	9611920467
○	**Service kit NBR**	9611920452	9611920456	9611920460	9611920464	9611920468
○	**Service kit FPM**	9611920453	9611920457	9611920461	9611920465	9611920469
○	**Service kit FEP**	9611920454	9611920458	9611920462	9611920466	9611920470

Parts marked with □♦○ are included in the service kits.
Recommended spare parts: service kits.

900097/3

Not manufactured anymore

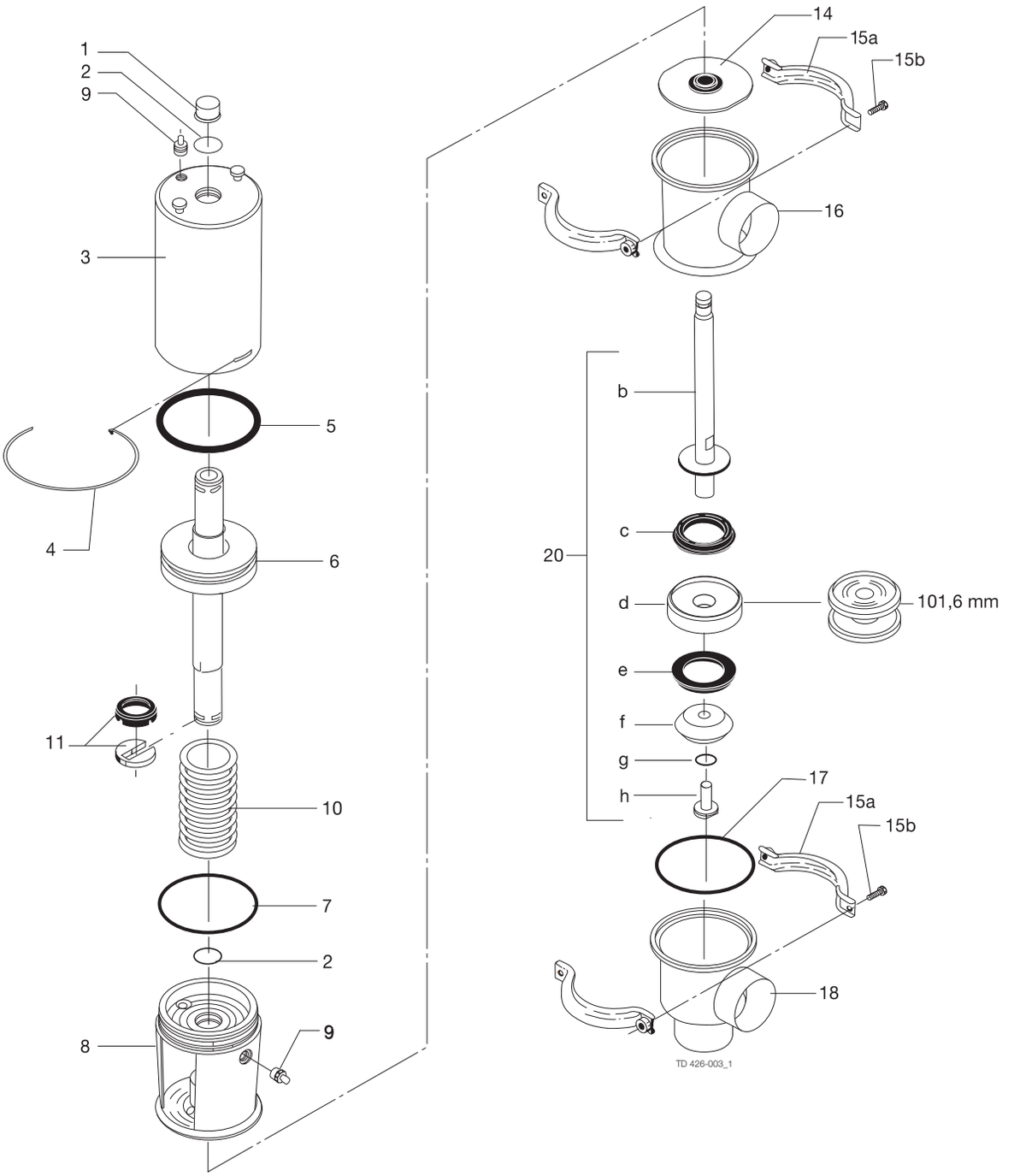

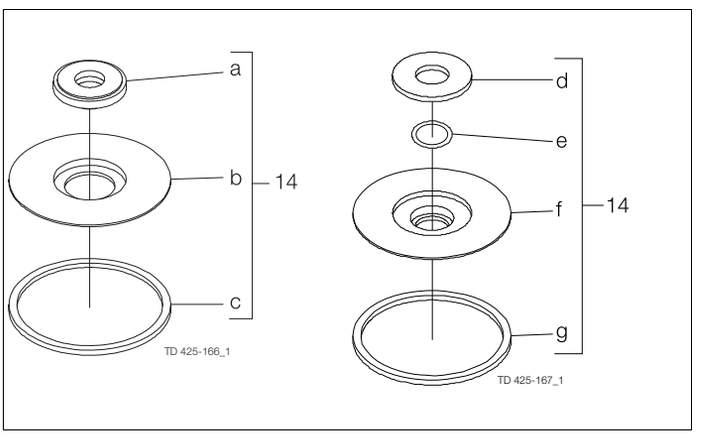

Alternatives stem seal Parts for FEP seal

Actuator

Pos		Qty	Denomination	DN 50 51 mm	DN 65 63.5 mm	76 mm	DN 80	DN 100 101.6 mm
			Actuator, -1, complete					
			Actuator, -2, complete					
			Actuator, -3, complete					
1		1	Cap	3180105256	3180105255	3180105255	3180105255	3180105255
2	□	2	O-ring					
3		1	Cylinder					
4	□	1	Lock wire					
5	□	1	O-ring					
6		1	Piston		9612123001	9612123001	9612123001	9612123001
7	□	1	O-ring					
9*		2	Plug					
10*		1	Spring assembly					
11	□	1	Clip, compl	3135307931	3135307932	3135307932	3135307932	3135307932

* Only for actuator -1 and -2.

Valve body part

Pos		Qty	Denomination	DN 50 51 mm	DN 65 63.5 mm	76 mm	DN 80	DN 100 101.6 mm
Stem seal								
14	◆	1	Lip seal, EPDM (standard)					
		1	Lip seal, NBR					
		1	Lip seal, FPM					
Clamp								
15a+b		2	Clamps and screws (period 9209-)	3132000271	3132000271	3132000272	3132000272	3132000272
15a		4	Clamp half (period -9209)					
15b		4	Screw (period -9209)					
Valve body								
16		1	Valve body, upper, 1 port ISO	3135300541	3135300551	3135300561		3135300581
		1	Valve body, upper, 1 port DIN		9612094701		9612094801	9612094901
		1	Valve body, upper, 2 ports ISO	3135300546	3135300556			3135300586
		1	Valve body, upper, 2 port DIN	9612094602				9612094902
17	◆○	1	Seal ring, EPDM (standard)					
		1	Seal ring, NBR					
		1	Seal ring, FPM					
		1	Seal ring, PTFE					
18		1	Valve body, lower, 2 ports ISO	3135303761	3135303801	3135303811		3135300261
		1	Valve body, lower, 2 ports DIN	9612094101	9612094201		9612094301	9612094401
		1	Valve body, lower, 3 ports ISO	3135303766	3135303806	3135303816		3135300266
		1	Valve body, lower, 3 ports DIN	9612094102			9612094302	9612094402

Not manufactured anymore

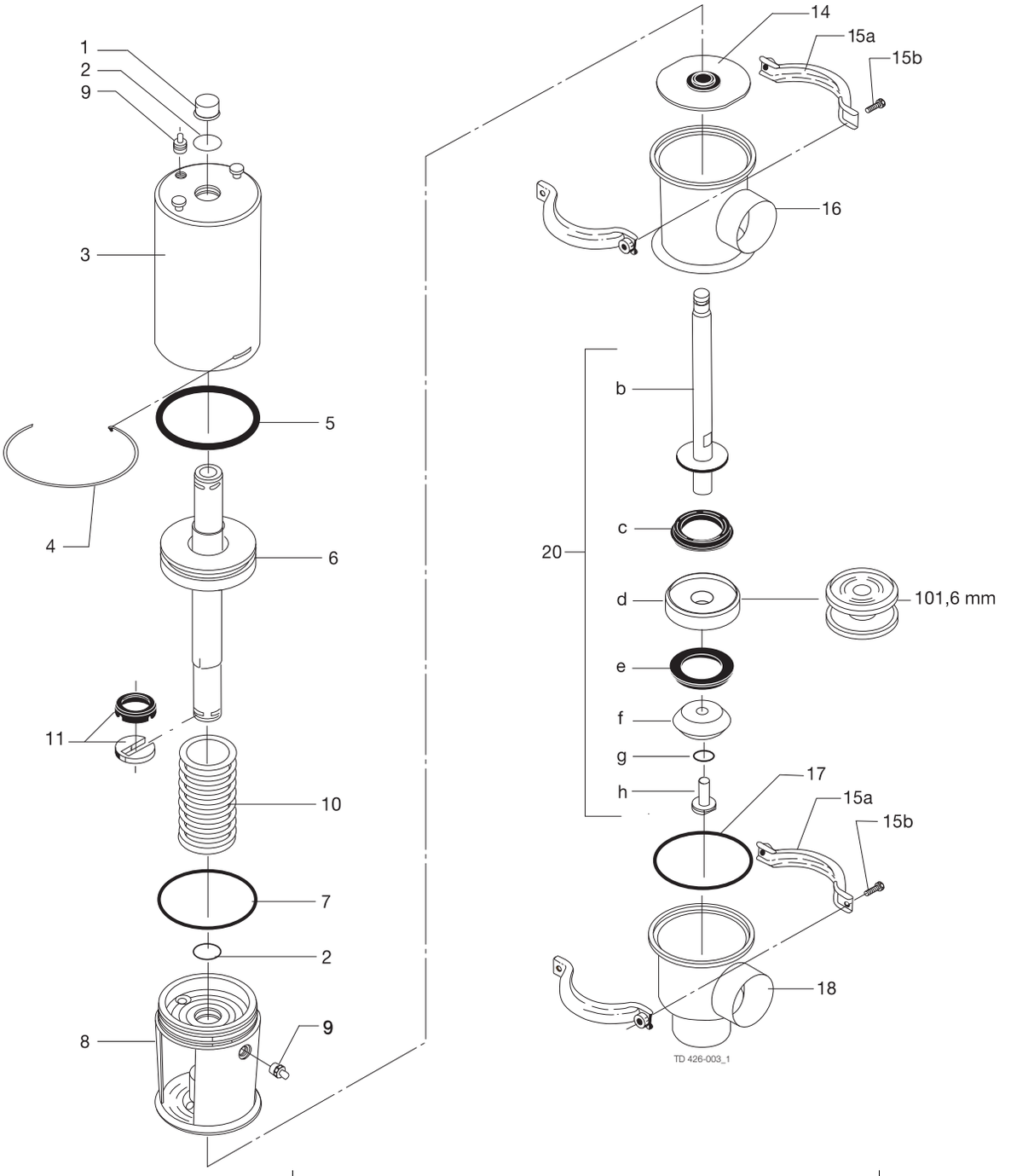

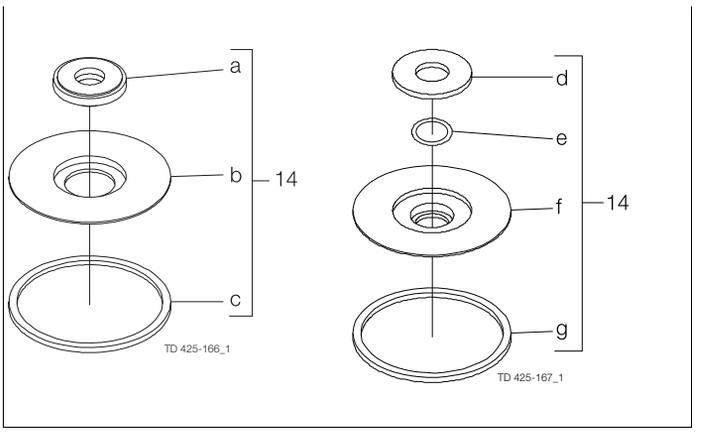

Alternatives stem seal Parts for FEP seal

Valve body part

Pos	Qty	Denomination	DN 50 51 mm	DN 65 63.5 mm	76 mm	DN 80	DN 100 101.6 mm
Valve plug							
	1	Plug, double,complete NBR	9612120504	9612120604	9612120704	9612098602	9612120804
	1	Plug, double,complete FPM	9612120506	9612120606		9612098603	9612120806
20b	1	Stem	9612120902	9612121002	9612121103		9612121104
20c ♦○	1	Plug seal, upper EPDM (standard)					
	1	Plug seal, upper NBR					
	1	Plug seal, upper FPM					
	1	Plug seal, upper, PTFE					
20d	1	Middle piece		9612121501			
20e ♦○	1	Plug seal, lower, EPDM (standard)					
	1	Plug seal, lower, NBR					
	1	Plug seal, lower, FPM					
	1	Plug seal, lower, PTFE					
20f	1	Washer	9612123401	9612123301	9612122001		9612123201
20g ♦○	1	O-ring, EPDM (standard)					
	1	O-ring, NBR					
	1	O-ring, FPM					
	1	O-ring, PTFE					
20h	1	Screw	3135303621	3135303621	3135303621	3135303621	3135303621

Alternatives

Pos	Qty	Denomination	DN 50 51 mm	DN 65 63.5 mm	76 mm	DN 80	DN 100 101.6 mm
Stem seal							
14	1	Lip seal kit, EPDM (standard)	9611920078	9611920078	9611920142	9611920142	9611920142
	1	Lip seal kit, NBR	9611920079	9611920079	9611920143	9611920143	9611920143
	1	Lip seal kit, FPM	9611920080	9611920080	9611920144	9611920144	9611920144
14a ○	1	Lip seal, EPDM					
	1	Lip seal, NBR					
	1	Lip seal, FPM					
14b	1	Plate	9612280501	9612280501	9612308701	9612308701	9612308701
14c ○	1	Seal ring, EPDM					
	1	Seal ring, NBR					
	1	Seal ring, FPM					
	1	Seal ring, PTFE					
Stem seal							
14d	1	Washer	3135304521	3135304521	3135304522	3135304522	3135304522
14e ○	1	O-ring FEP/Silicone					
14f	1	Holder	3135304531	3135304531	3135304541	3135304541	3135304541
14g ○	1	Seal ring, PTFE					

		DN 50 51 mm	DN 65 63.5 mm	76 mm	DN 80	DN 100 101.6 mm
Service kit for actuator						
□	**Service kit**	9611920008	9611920008	9611920009	9611920009	9611920009
Service kit for product wetted parts, standard						
♦	**Service kit EPDM**	9611920028	9611920031	9611920034	9611920108	9611920037
♦	**Service kit NBR**	9611920029	9611920032	9611920035	9611920109	9611920038
♦	**Service kit FPM**	9611920030	9611920033	9611920036	9611920110	9611920039
Service kit for special lip seal						
○	**Service kit EPDM**	9611920475	9611920479	9611920483	9611920487	9611920491
○	**Service kit NBR**	9611920476	9611920480	9611920484	9611920488	9611920492
○	**Service kit FPM**	9611920477	9611920481	9611920485	9611920489	9611920493
○	**Service kit FEP**	9611920478	9611920482	9611920486	9611920490	9611920494

Parts marked with □♦○ are included in the service kits.
Recommended spare parts: service kits.

900098/3

Not manufactured anymore

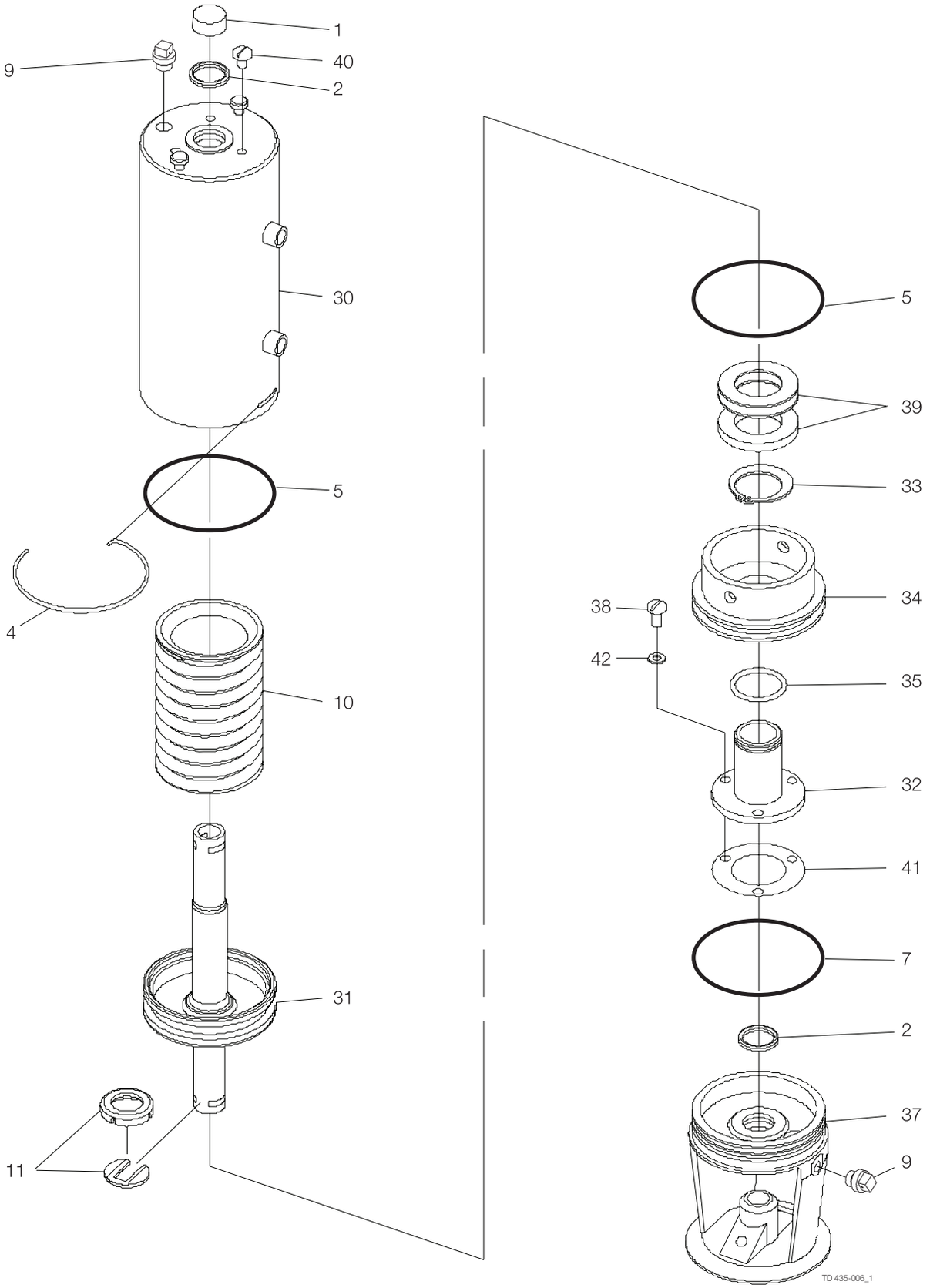

Valve body parts: see parts list for standard valve

Pos		Qty	Denomination	38 - 63.5 mm	76 - 101.6 mm
			Actuator, -7, complete	3135304472	
1		1	Cap	3180105256	3180105255
2	□	2	O-ring		
4	□	1	Lock wire		
5	□	2	O-ring		
7	□	1	O-ring		
9		2	Plug		
10		1	Spring assembly, standard (black)	3135306251	3135306221
		1	Spring assembly, with extra strong spring (white)	3135306252	3135306222
11	□	1	Clip, complete (period 84.08 -)	3135307931	3135307932
		1	Clip, (period 68.02 - 84.07)		
30		1	Cylinder	3135304291	3135304301
31		1	Piston	3135306213	
33	□	1	Lock ring		
		1	Piston for intermediate position, (in connection with piston for seeger-ring) (period -83.03)		
35	□	1	O-ring		
		1	Bonnet, (aseptic version)		3135304242
38		3-4*	Screw	22113103	22113602
39		1	Spacer ring for TS, (6 mm)	3135304881	
		1	Spacer ring for TS, (7 mm)		
		3-4*	Spacer ring for TS, (1.5 mm)	3135304882	3135304892
40		3-4*	Plastic screw	9611991372	9611991371
41	□	1	Packing		
42	□	3-4*	Fibre washer		

				38 - 63.5 mm	76 - 101.6 mm
Service kit for product wetted parts					
	□		**Service kit**	**9611920111**	**9611920112**

* Quantity 4 is valid for 76-101.6 mm

Parts marked with □ are included in the service kits.
Recommended spare parts: service kits.

900094/3

Not manufactured anymore

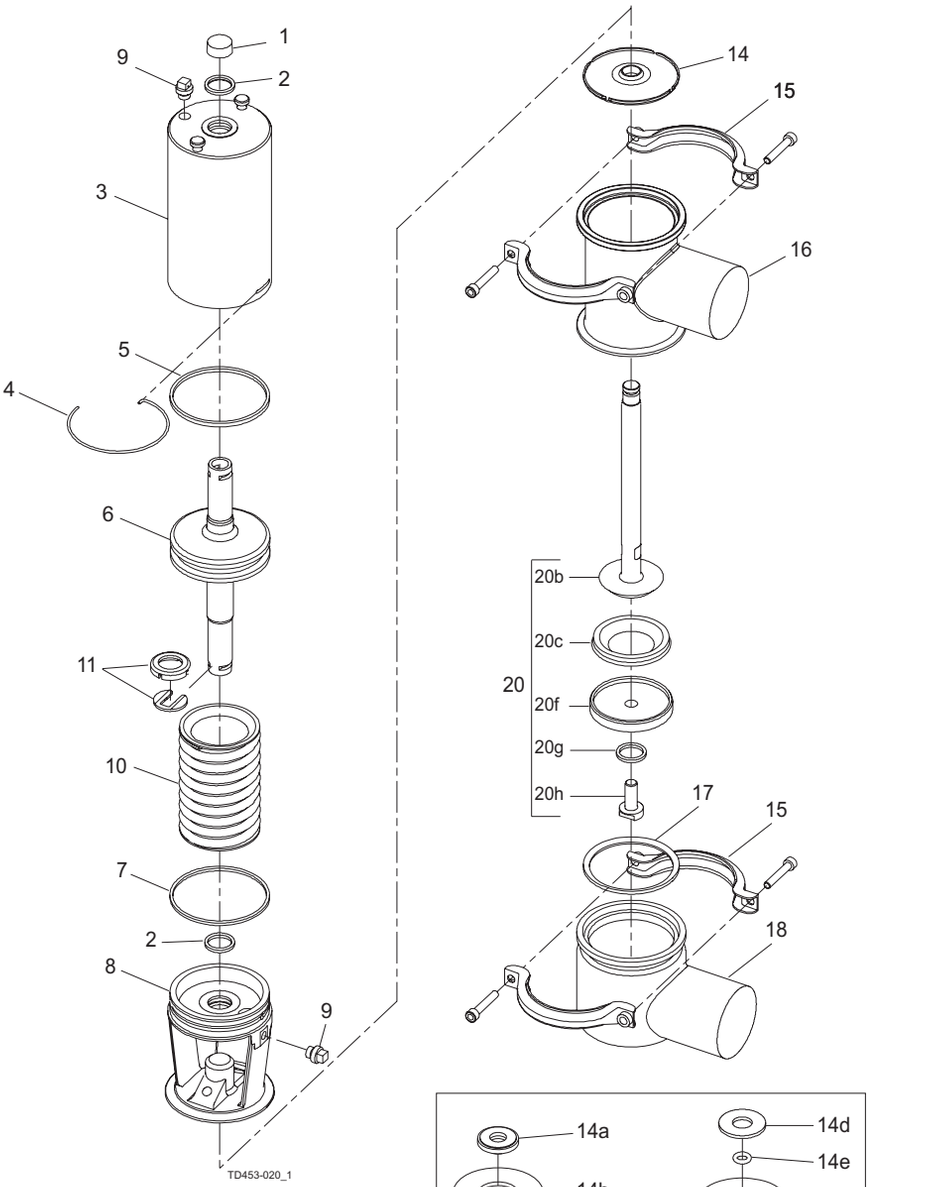

Actuator

Pos		Qty	Denomination	DN 40 DN/OD 38	DN 50 DN/OD 51	DN 65 DN/OD 63,5	DN 80 DN/OD 76	DN 100 DN/OD 101,6
			Actuator, -1, complete	3135302061	3135302061	3135302061	3135302141	3135302141
			Actuator, -2, complete	3135302062	3135302062	3135302062	3135302142	3135302142
			Actuator, -3, complete	3135302063	3135302063	3135302063	3135302143	3135302143
1		1	Cap	3180105256	3180105256	3180105256	3180105255	3180105255
2	□	2	O-ring					
3		1	Cylinder	3135301391	3135301391	3135301391	3135301851	3135301851
4	□	1	Lock Wire					
5	□	1	O-ring					
6		1	Piston, -1, -2	3135306211	3135306211	3135306211	3135306191	3135306191
		1	Piston, -3	3135306212	3135306212	3135306212		
7	□	1	O-ring					
8		1	Bonnet	3135301331	3135301331	3135301331	3135301901	3135301901
9*		2	Plug					
10*		1	Spring assembly, standard (black)	3135306251	3135306251	3135306251	3135306221	3135306221
10		1	Spring assembly, with extra strong spring (white)	3135306252	3135306252	3135306252	3135306222	3135306222
11	□	1	Clip, complete	3135307931	3135307931	3135307931	3135307932	3135307932

* Only for actuator -1 and -2.

Valve body part

Pos		Qty	Denomination	DN 40 DN/OD 38	DN 50 DN/OD 51	DN 65 DN/OD 63,5	DN 80 DN/OD 76	DN 100 DN/OD 101,6
Stem seal								
14	♦	1	Lip seal, EPDM (standard)					
		1	Lip seal, NBR					
		1	Lip seal, FPM					
Clamp								
15		2	Clamps and screws	3132000273	3132000273	3132000273	3132000272	3132000272
Valve body								
16		1	Valve body, upper, 1 port ISO	3135300531	3135300541	3135300551	3135300561	3135300581
		1	Valve body, upper, 1 port DIN			9612094701	9612094801	9612094901
		1	Valve body, upper, 2 ports ISO	3135300536	3135300546	3135300556		3135300586
		1	Valve body, upper, 2 ports DIN	9612094502	9612094602			9612094902
17	♦	1	Seal ring, EPDM (standard)					
		1	Seal ring, NBR					
		1	Seal ring, FPM					
		1	Seal ring, PTFE					
18		1	Valve body, lower, 1 ports ISO	3135305821	3135305831	3135305841	3135305841	3135305861
		1	Valve body, lower, 1 ports DIN	9612322101	9612322201	9612322301	9612322401	9612322501
		1	Valve body, lower, 2 ports ISO	3135305822	3135305832	3135305842	3135305852	3135305862
		1	Valve body, lower, 2 ports DIN	9612322102	9612322202	9612322302	9612322402	9612322501
Valve plug								
20		1	Plug, complete EPDM (standard)		3135305731			
		1	Plug, complete NBR	3135305712	3135305732		3135305752	3135305762
		1	Plug, complete FPM	3135305713	3135305733	3135305743	3135305753	3135305763
20b		1	Stem	3135305691	3135305692	3135305693	3135305701	3135305702
20c	♦	1	Plug seal, upper, EPDM (standard)					
		1	Plug seal, upper, NBR					
		1	Plug seal, upper, FPM					
		1	Plug seal, upper, PTFE					
20f		1	Washer					3135305671
20g	♦	1	O-ring, EPDM (standard)	99003401	99003401	99003401	99003401	99003401
		1	O-ring, NBR	22340421	22340421	22340421	22340421	22340421
		1	O-ring, FPM	22340435	22340435	22340435	22340435	22340435
		1	O-ring, PTFE	9612433001	9612433001	9612433001	9612433001	9612433001
20h		1	Screw	3135303621	3135303621	3135303621	3135303621	3135303621

Not manufactured anymore

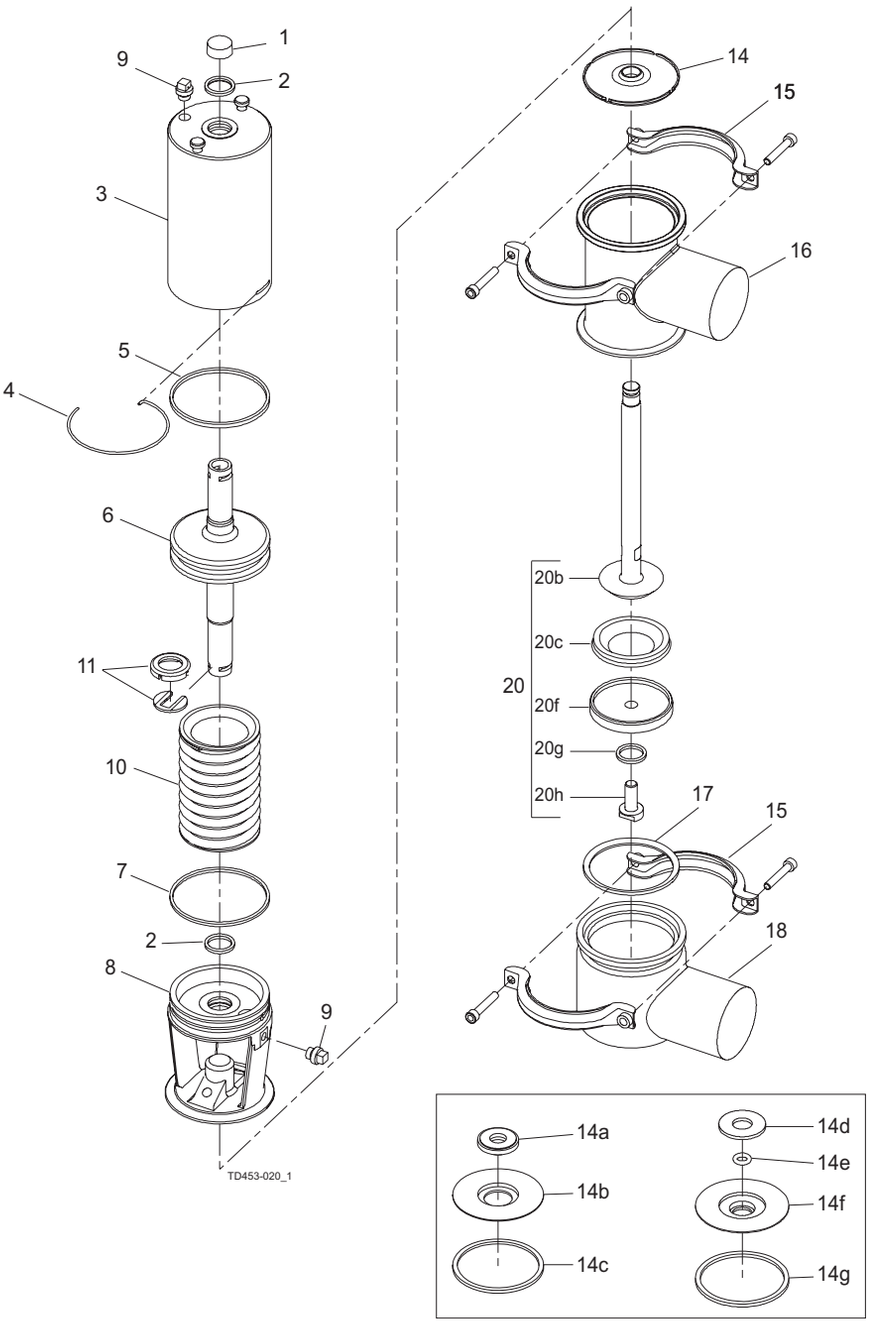

Alternatives stem seal

Parts for FEP seal

Alternatives

Pos	Qty	Denomination	DN 40 DN/OD 38	DN 50 DN/OD 51	DN 65 DN/OD 63,5	DN 80 DN/OD 76	DN 100 DN/OD 101,6
Stem seal							
14	1	Lip seal kit, EPDM (standard)	9611920078	9611920078	9611920078	9611920142	9611920142
	1	Lip seal kit, NBR	9611920079	9611920079	9611920079	9611920143	9611920143
	1	Lip seal kit, FPM	9611920080	9611920080	9611920080	9611920144	9611920144
14a ○	1	Lip seal, EPDM					
	1	Lip seal, NBR					
	1	Lip seal, FPM					
14b	1	Plate	9612280501	9612280501	9612280501	9612308701	9612308701
14c ○	1	Seal ring, EPDM					
	1	Seal ring, NBR					
	1	Seal ring, FPM					
Stem seal							
14d	1	Washer	3135304521	3135304521	3135304521	3135304522	3135304522
14e ○	1	O-ring FEP/Silicone					
14f	1	Holder	3135304531	3135304531	3135304531	3135304541	3135304541
14g ○	1	Seal ring, PTFE					

Pos	Qty	Denomination	DN 40 DN/OD 38	DN 50 DN/OD 51	DN 65 DN/OD 63,5	DN 80 DN/OD 76	DN 100 DN/OD 101,6
Valve body with 0.8 RA finish inside							
16	1	Valve body, upper, 1 port ISO				3135300562	
	1	Valve body, upper, 1 port DIN	9612094503		9612094703	9612094803	9612094903
	1	Valve body, upper, 2 ports ISO					3135300583
	1	Valve body, upper, 2 ports DIN	9612094504	9612094604	9612094704	9612094804	
18	1	Valve body, lower, 1 ports ISO	3135305827	3135305837	3135305847	3135305857	3135305867
	1	Valve body, lower, 1 ports DIN	9612322103	9612322203	9612322303	9612322403	9612322503
	1	Valve body, lower, 2 ports ISO	3135305828	3135305838	3135305848	3135305858	3135305868
	1	Valve body, lower, 2 ports DIN	9612322104	9612322204	9612322304	9612322404	9612322504
Valve plug with 0.8 RA finish							
20	1	Plug, complete EPDM (standard)	3135305714	3135305734		3135305754	3135305764
	1	Plug, complete NBR	3135305715	3135305735	3135305745	3135305755	3135305765
	1	Plug, complete FPM	3135305716	3135305736	3135305746	3135305756	3135305766
20b	1	Stem	3135305694			3135305704	3135305704
20f	1	Washer	3135305642	3135305642	3135305652	3135305662	3135305672
20h	1	Screw	3135310111	3135310111	3135310111	3135310111	3135310111

		DN 40 DN/OD 38	DN 50 DN/OD 51	DN 65 DN/OD 63,5	DN 80 DN/OD 76	DN 100 DN/OD 101,6
Service kit for actuator						
□	Service kit	9611920008	9611920008	9611920008	9611920009	9611920009
Service kit for product wetted parts, standard						
♦	Service kit EPDM	9611920518	9611920518	9611920521	9611920524	9611920527
♦	Service kit NBR	9611920519	9611920519		9611920525	9611920528
♦	Service kit FPM	9611920520	9611920520		9611920526	
Service kit for special lip seal						
○	Service kit EPDM	9611920971	9611920975	9611920979	9611920983	9611920987
○	Service kit NBR	9611920972	9611920976	9611920980	9611920984	9611920988
○	Service kit FPM	9611920973	9611920977	9611920981	9611920985	9611920989
○	Service kit FEP	9611920974	9611920978	9611920982	9611920986	9611920990

Parts marked with □♦○ are included in the service kits.

Recommended spare parts: Service kits.

900-0151/2

Not manufactured anymore

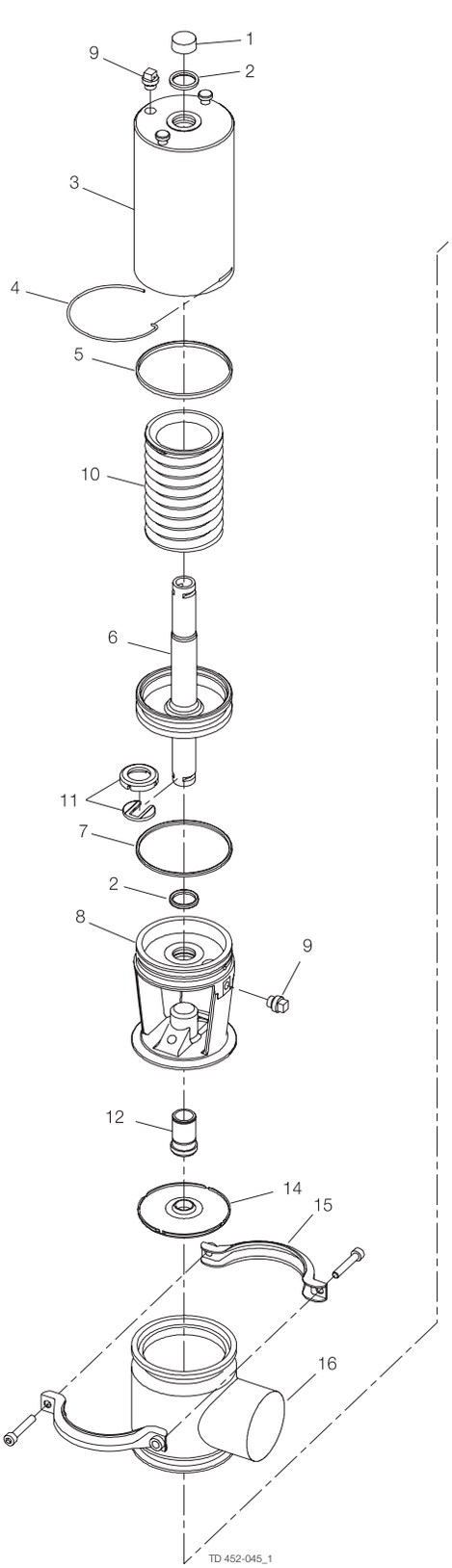

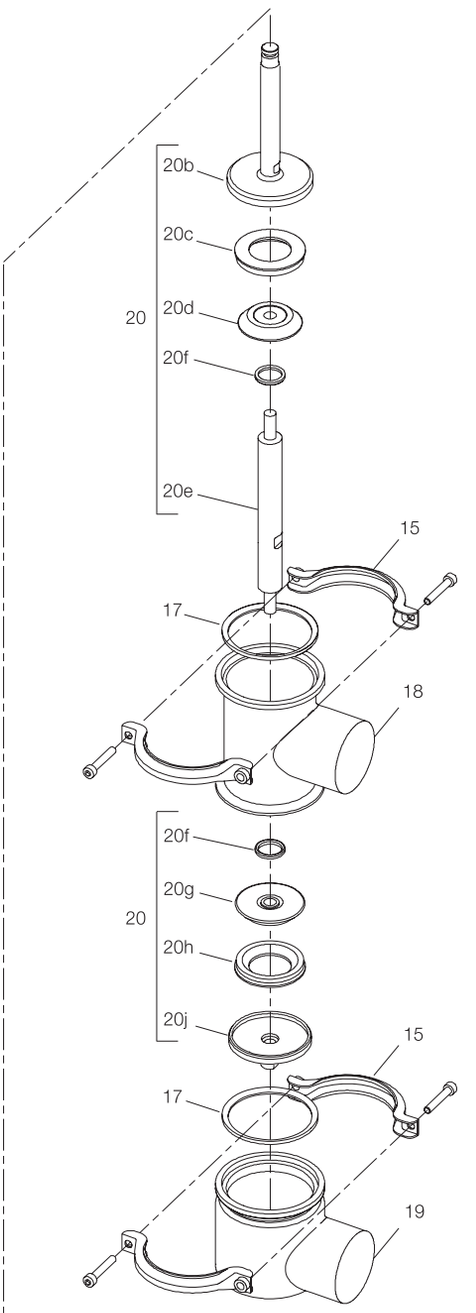

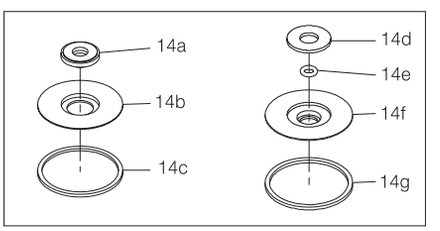

Alternatives stem seal Parts for FEP seal

Actuator

Pos		Qty	Denomination	DN 50 DN/OD 51	DN 65 DN/OD 63.5	DN/OD 76	DN 80	DN 100 DN/OD 101.6
1		1	Cap	3180105256	3180105256	3180105255	3180105255	3180105255
2	□	2	O-ring					
3		1	Cylinder	3135301391	3135301391	3135301851	3135301851	3135301851
4	□	1	Lock Wire					
5	□	1	O-ring					
6		1	Piston, -1, -2	3135306211	3135306211	3135306191	3135306191	3135306191
		1	Piston, -3	3135306212	3135306212			
7		1	O-ring	9611990396	9611990396	22340617	22340617	22340617
8		1	Bonnet	9612359101	9612359101	9612359201	9612359201	9612359201
9*		2	Plug					
10*		1	Spring assembly, standard (black)	3135306251	3135306251	3135306221	3135306221	3135306221
		1	Spring assembly, with extra strong spring (white)	3135306252	3135306252	3135306222	3135306222	3135306222
11	□	1	Clip, complete	3135307931	3135307931	3135307932	3135307932	3135307932
12	□		Guide ring					

* Only for actuator -1 and -2.

Valve body part

Pos		Qty	Denomination	DN 50 DN/OD 51	DN 65 DN/OD 63.5	DN/OD 76	DN 80	DN 100 DN/OD 101.6
Stem seal								
14	♦	1	Lip seal, EPDM (standard)					
		1	Lip seal, HNBR					
		1	Lip seal, FPM					
Clamp								
15		2	Clamps and screws	3132000273	3132000273	3132000272	3132000272	3132000272
Valve body								
16		1	Valve body, upper, 1 port ISO	9612616101				
		1	Valve body, upper, 1 port DIN					
		1	Valve body, upper, 2 ports ISO	9612616102		9612616502		9612577902
		1	Valve body, upper, 2 ports DIN	9612616202	9612616302		9612616602	9612616402
17	♦	2	Seal ring, EPDM (standard)					
		2	Seal ring, NBR					
		2	Seal ring, FPM					
		2	Seal ring, PTFE					
18		1	Valve body, middle, 1 port ISO	3135300541	3135300551	3135300561		3135300581
		1	Valve body, middle, 1 port DIN		9612094701		9612094801	9612094901
		1	Valve body, middle, 2 ports ISO	3135300546	3135300556			3135300586
		1	Valve body, middle, 2 ports DIN	9612094602				
19		1	Valve body, lower, 1 ports ISO	3135305831	3135305841	3135305851		3135305861
		1	Valve body, lower, 1 ports DIN	9612322201	9612322301		9612322401	9612322501
		1	Valve body, lower, 2 ports ISO	3135305832	3135305842	3135305852		3135305862
		1	Valve body, lower, 2 ports DIN	9612322202	9612322302		9612322402	9612322502
Valve plug								
20		1	Plug, complete EPDM (standard)		9612649002			
		1	Plug, complete NBR		9612649007	9612649008	9612649009	9612649010
		1	Plug, complete FPM	9612649011			9612649014	9612649015
20b		1	Stem upper	3135303772	3135303782	3135303413	9612629801	3135303792
20c	♦	1	Plug seal, upper, EPDM (standard)					
		1	Plug seal, upper, NBR					
		1	Plug seal, upper, FPM					
		1	Plug seal, upper, PTFE					
20d		1	Washer upper	3135303581	3135303591	3135303601	3135303601	3135303611
20e		1	Middle stem	9612578301	9612578302	9612578304	9612578303	9612578305
20f	♦	2	O-ring, EPDM (standard)					
		2	O-ring, NBR					
		2	O-ring, FPM					
		2	O-ring, PTFE					
20g		1	Washer lower	3135303581	9612584901	3135303601	3135303601	3135303611
20h	♦	1	Plug seal, lower, EPDM (standard)					
		1	Plug seal, lower, NBR					
		1	Plug seal, lower, FPM					
		1	Plug seal, lower, PTFE					
20j		1	Lower stem	9612578501	9612578502	9612578503	9612578503	9612578504

Not manufactured anymore

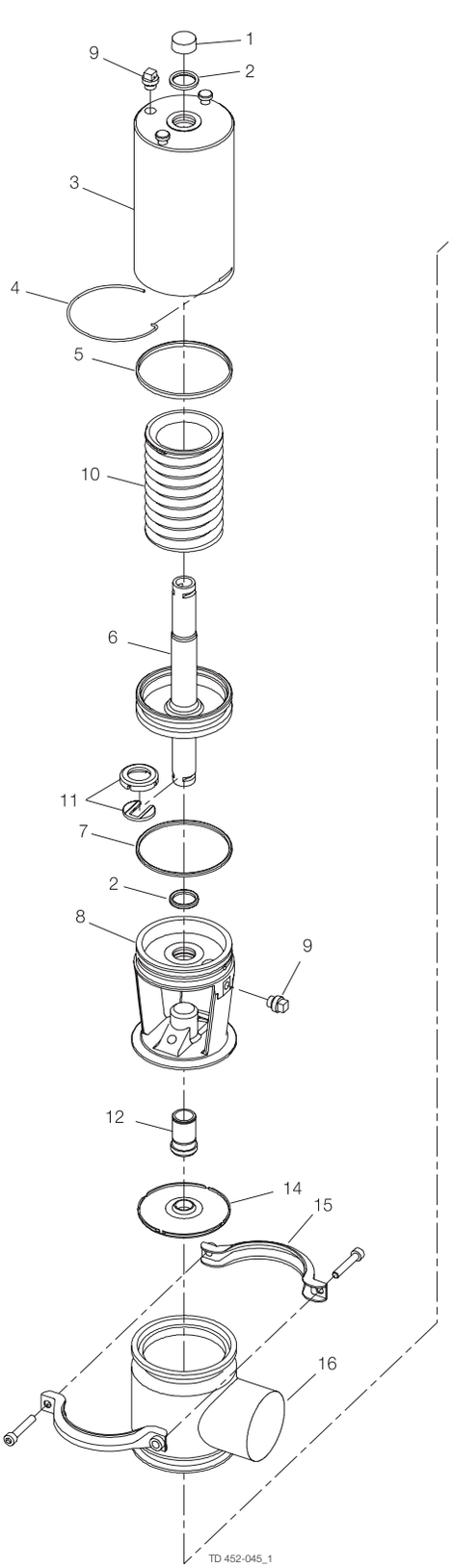

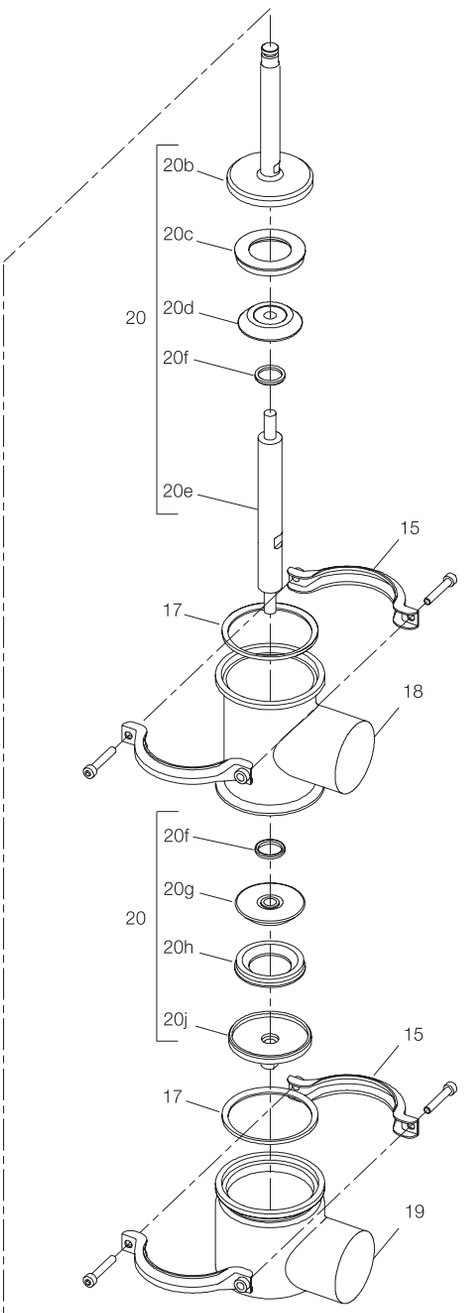

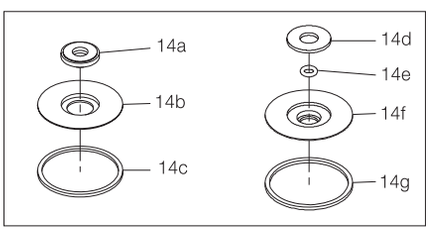

Alternatives stem seal Parts for FEP seal

Alternatives

Pos	Qty	Denomination	DN 50 DN/OD 51	DN 65 DN/OD 63.5	DN/OD 76	DN 80	DN 100 DN/OD 101.6
Stem seal							
14	1	Lip seal kit, EPDM (standard)	9611920078	9611920078	9611920142	9611920142	9611920142
	1	Lip seal kit, NBR	9611920079	9611920079	9611920143	9611920143	9611920143
	1	Lip seal kit, FPM	9611920080	9611920080	9611920144	9611920144	9611920144
14a ○	1	Lip seal, EPDM					
	1	Lip seal, NBR					
	1	Lip seal, FPM					
14b	1	Plate	9612280501	9612280501	9612308701	9612308701	9612308701
14c ○	1	Seal ring, EPDM					
	1	Seal ring, NBR					
	1	Seal ring, FPM					
Stem seal							
14d	1	Washer	3135304521	3135304521	3135304522	3135304522	3135304522
14e ○	1	O-ring FEP/Silicone					
14f	1	Holder	3135304531	3135304531	3135304541	3135304541	3135304541
14g ○	1	Seal ring, PTFE					

Pos	Qty	Denomination	DN 50 DN/OD 51	DN 65 DN/OD 63.5	DN/OD 76	DN 80	DN 100 DN/OD 101.6
Valve body with 0.8 RA finish inside							
16	1	Valve body, upper, 1 port ISO	9612616103	9612577803	9612616503		9612577903
	1	Valve body, upper, 1 port DIN	9612616203	9612616303		9612616603	9612616403
	1	Valve body, upper, 2 ports ISO	9612616104	9612577804	9612616504		9612577904
	1	Valve body, upper, 2 ports DIN	9612616204	9612616303		9612616604	9612616404
18	1	Valve body, middle, 1 port ISO			3135300562		
	1	Valve body, middle, 1 port DIN		9612094703		9612094803	9612094903
	1	Valve body, middle, 2 ports ISO					3135300583
	1	Valve body, middle, 2 ports DIN	9612094604	9612094704		9612094804	
19	1	Valve body, lower, 2 ports ISO	3135305837	3135305847	3135305857		3135305867
	1	Valve body, lower, 2 ports DIN	9612322203	9612322303		9612322403	9612322503
	1	Valve body, lower, 3 ports ISO	3135305838	3135305848	3135305858		3135305868
	1	Valve body, lower, 3 ports DIN	9612322204	9612322304		9612322404	9612322504
Valve plug with 0.8 RA finish							
20		Plug, complete EPDM (standard)	9612649801	9612649802	9612649803	9612649804	9612649805
		Plug, complete NBR	9612649806	9612649807	9612649808	9612649809	9612649810
		Plug, complete FPM	9612649811	9612649812	9612649813	9612649814	9612649815
20b	1	Stem upper		3135310073	3135310074	9612629802	
20d	1	Washer upper	3135310102		3135310104	3135310104	
20e	1	Middle stem	9612578306	31353578307	9612578308	9612578309	9612578310
20g	1	Washer lower	3135310102	9612584902	3135310104	961210104	
20j	1	Stem lower	9612578505	9612578506	9612578507	9612578507	9612578508

	Denomination	DN 50 DN/OD 51	DN 65 DN/OD 63.5	DN/OD 76	DN 80	DN 100 DN/OD 101.6
Service kit for actuator						
□	**Service kit**	**9611920969**	**9611920969**	**9611920970**	**9611920970**	**9611920970**
Service kir for product wetted parts, standard						
♦	**Service kit EPDM**	**9611920934**	**9611920937**	**9611920940**	**9611920940**	**9611920946**
♦	**Service kit NBR**	**9611920935**	**9611920938**	**9611920941**	**9611920941**	**9611920947**
♦	**Service kit FPM**	**9611920936**	**9611920939**	**9611920942**	**9611920942**	**9611920948**
Service kit for special lip seal						
○	**Service kit EPDM**	**9611920949**	**9611920953**	**9611920957**	**9611920961**	**9611920965**
○	**Service kit NBR**	**9611920950**	**9611920954**	**9611920958**	**9611920962**	**9611920966**
○	**Service kit FPM**	**9611920951**	**9611920955**	**9611920959**	**9611920963**	**9611920967**
○	**Service kit FEP**	**9611920952**	**9611920956**	**9611920960**	**9611920964**	**9611920968**

Parts marked with □♦○ included in the service kits.

Recommended spare parts: Service kits.

900150/7

Not manufactured anymore

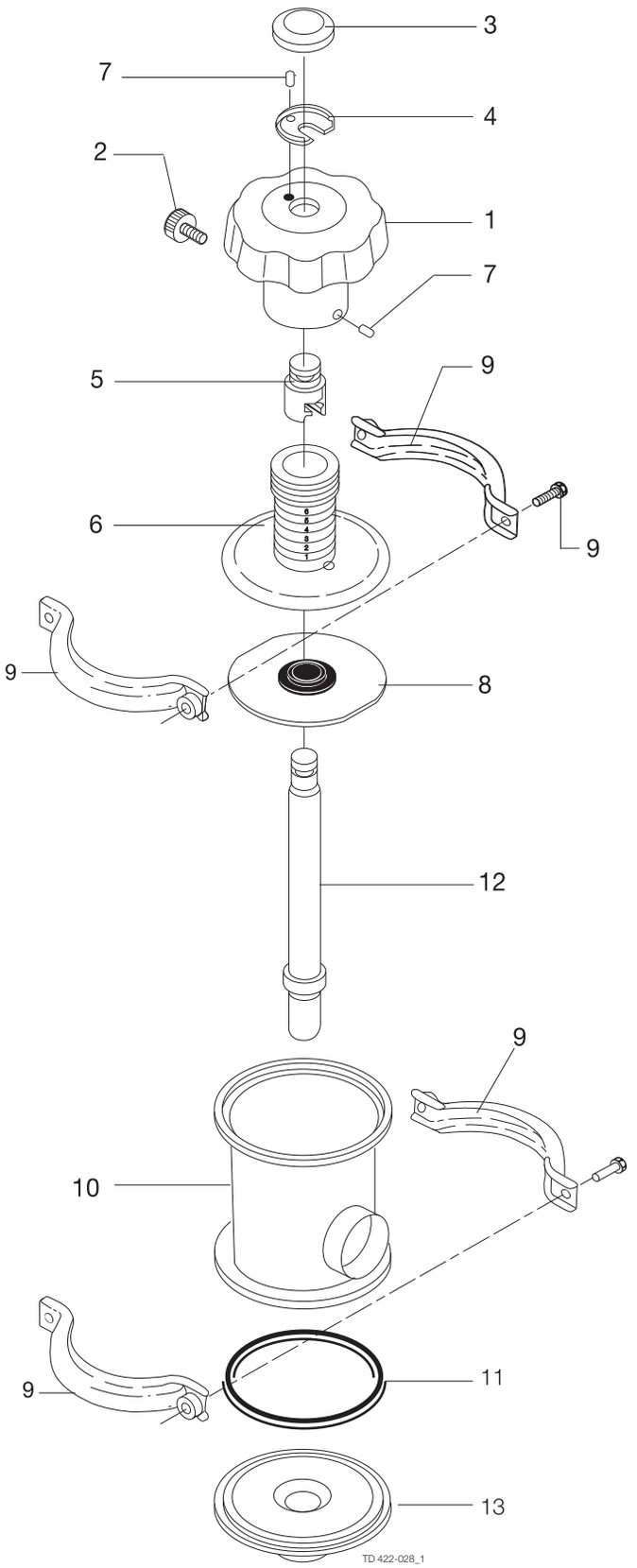

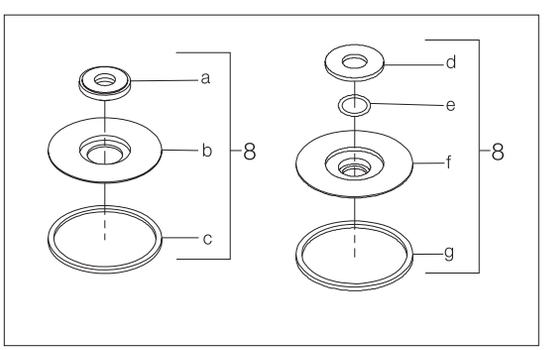

Alternatives stem seal Parts for FEP seal

Operating mechanism

Pos		Qty	Denomination	
		1	Operating mechanism complete	3135305311
1		1	Hand wheel	3135305281
2		1	Lock screw	3135305291
3		1	Cap	3135304681
4		1	Washer	3135304671
5		1	Stem holder	3135304661
6		1	Guide	3135304591
7		2	Set screw	22158192
Lip seal				
8	□	1	Lip seal, EPDM	
		1	Lip seal, NBR	
		1	Lip seal, FPM	
Clamp				
9		2	Clamps and screws	3132000271
Valve body				
10		1	Valve body	3135302661
11	□	1	Seal ring, EPDM	
		1	Seal ring, NBR	
		1	Seal ring, FPM	
		1	Seal ring, PTFE	
Valve plug and seat				
13		1	Valve seat	

Alternatives

Pos		Qty	Denomination	
Stem seal				
8		1	Lip seal kit, EPDM (standard)	9611920078
		1	Lip seal kit, NBR	9611920079
		1	Lip seal kit, FPM	9611920080
8a	♦	1	Lip seal, EPDM	
		1	Lip seal, NBR	
		1	Lip seal, FPM	
8b		1	Plate	9612280501
8c	♦	1	Seal ring, EPDM	
		1	Seal ring, NBR	
		1	Seal ring, FPM	
Stem seal				
8d		1	Washer	3135304521
8e	♦	1	O-ring FEP/Silicone	
8f		1	Holder	3135304531
8g	♦	1	Seal ring, PTFE	

Service kit for product wetted parts, standard

□	**Service kit, EPDM**	**9611920139**
□	**Service kit, NBR**	**9611920140**

Service kit for special lip seals

♦	**Service kit EPDM**	**9611920495**
♦	**Service kit NBR**	**9611920496**
♦	**Service kit FPM**	**9611920497**
♦	**Service kit FEP**	**9611920498**

Parts marked with □♦ are included in the service kits.

Recommended spare parts: Pos. 3,7 and service Kit.

900422/2

Not manufactured anymore

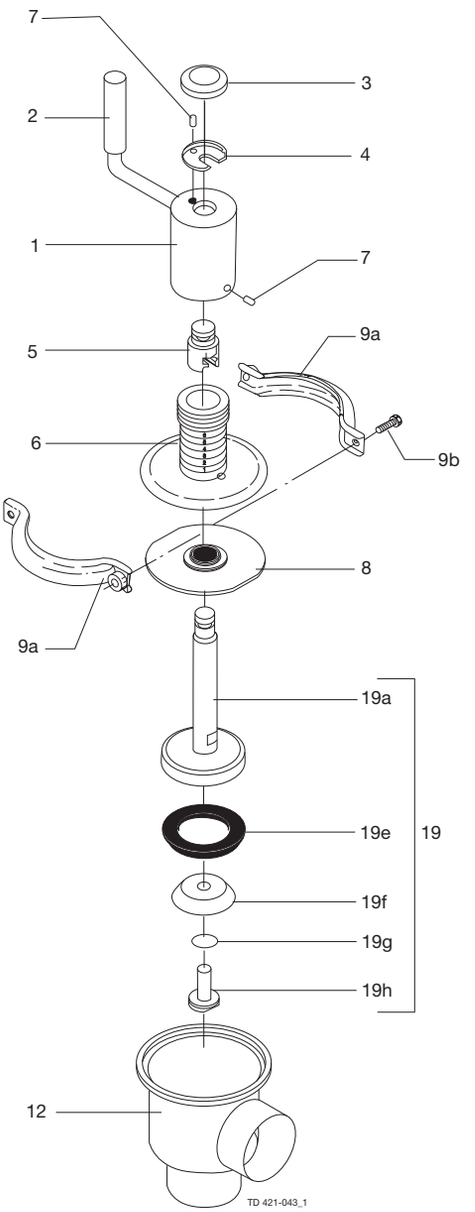

Alternative stem seal

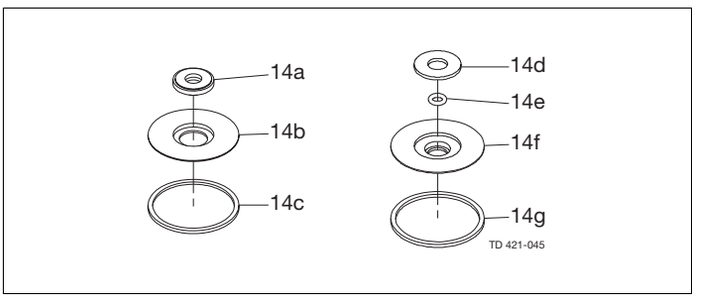

Special lip seal Parts for FEP lip seal

Operating mechanism

Pos	Qty	Denomination	DN 40 38 mm	DN 50 51 mm	DN 65 63.5 mm	76 mm	DN 80	DN 100 101.6 mm
	1	Crank mechanism complete	3135305301	3135305301	3135305301			
1	1	Crank	3135304621	3135304621	3135304621	3135304621	3135304621	3135304621
2	1	Handle, (included in pos. 1)	3135304951	3135304951	3135304951	3135304951	3135304951	3135304951
3	1	Cap	3135304681	3135304681	3135304681	3135304681	3135304681	3135304681
4	1	Washer	3135304671	3135304671	3135304671	3135304671	3135304671	3135304671
5	1	Stem holder	3135304661	3135304661	3135304661	3135304661	3135304661	3135304661
6	1	Guide	3135304591	3135304591	3135304591	3135304601	3135304601	3135304601
7	2	Set screw	22158192	22158192	22158192	22158192	22158192	22158192

Valve body part

Pos	Qty	Denomination	DN 40 38 mm	DN 50 51 mm	DN 65 63.5 mm	76 mm	DN 80	DN 100 101.6 mm
Stem seal								
8 □	1	Lip seal, EPDM						
	1	Lip seal, NBR						
	1	Lip seal, FPM						
Clamp								
9a+b	1	Clamps & screws, (period 9209-)	3132000271	3132000271	3132000271	3132000272	3132000272	3132000272
9a	2	Clamp half, (period -9209)						
9b	2	Screw, (period -9209)						
Valve body								
12	1	Valve body, 2 ports ISO	3135303751	3135303761	3135303801	3135303811		3135300261
	1	Valve body, 2 ports DIN		9612094101	9612094201		9612094301	9612094401
	1	Valve body, 3 ports ISO		3135303766	3135303806	3135303816		3135300266
	1	Valve body, 3 ports DIN		9612094102			9612094302	9612094402
Valve plug								
19	1	Plug, single, complete, EPDM	3135303301	3135303311	3135303321	3135303331	3135303334	3135303341
19a	1	Stem	3135303401	3135303771	3135303781	3135303411	3135303412	3135303791
19e □◆	1	Plug seal, EPDM						
	1	Plug seal, NBR						
	1	Plug seal, FPM						
	1	Plug seal, PTFE						
19f	1	Washer	3135303571	3135303581	3135303591	3135303601	3135303602	3135303611
19g □◆	1	O-ring, EPDM						
	1	O-ring, NBR						
	1	O-ring, FPM						
	1	O-ring, PTFE						
19h	1	Screw	3135303621	3135303621	3135303621	3135303621	3135303621	3135303621

Not manufactured anymore

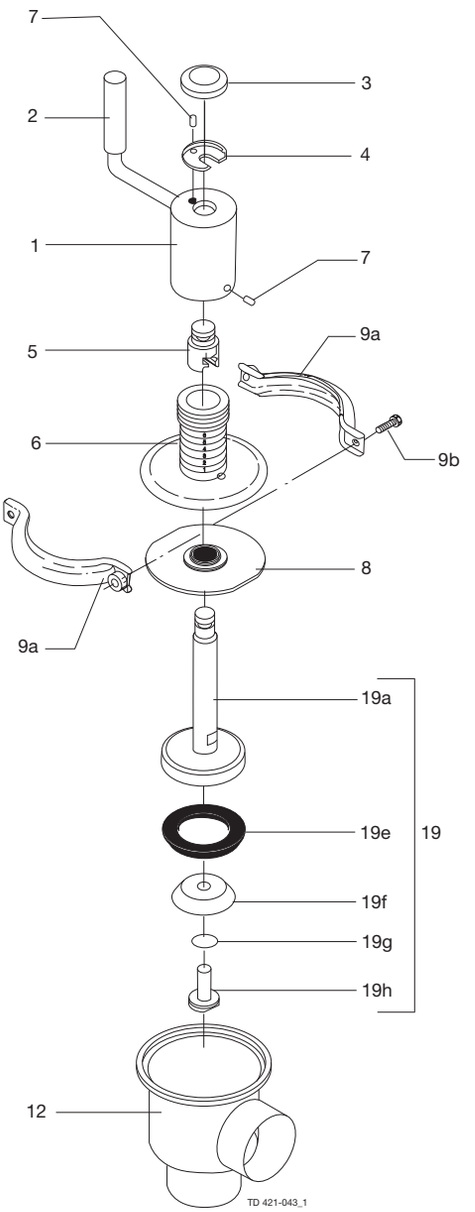

Alternative stem seal

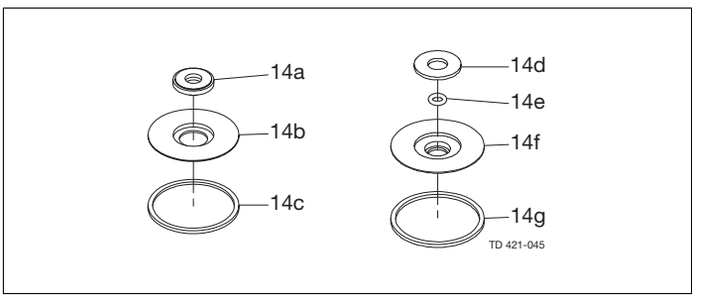

Special lip seal Parts for FEP lip seal

Alternatives
Valve body part

Pos	Qty	Denomination	DN 40 38 mm	DN 50 51 mm	DN 65 63.5 mm	76 mm	DN 80	DN 100 101.6 mm
Stem seal								
14	1	Lip seal kit, EPDM (standard)	9611920078	9611920078	9611920078	9611920142	9611920142	9611920142
	1	Lip seal kit, NBR	9611920079	9611920079	9611920079	9611920143	9611920143	9611920143
	1	Lip seal kit, FPM	9611920080	9611920080	9611920080	9611920144	9611920144	9611920144
14a ♦	1	Lip seal, EPDM						
	1	Lip seal, NBR						
	1	Lip seal, FPM						
14b	1	Plate	9612280501	9612280501	9612280501	9612308701	9612308701	9612308701
14c ♦	1	Seal ring, EPDM						
	1	Seal ring, NBR						
	1	Seal ring, FPM						
Stem seal								
14d	1	Washer	3135304521	3135304521	3135304521	3135304522	3135304522	3135304522
14e ♦	1	O-ring, FEP/Silicone						
14f	1	Holder	3135304531	3135304531	3135304531	3135304541	3135304541	3135304541
14g ♦	1	Seal ring, PTFE						

Pos	Qty	Denomination	DN 40 38 mm	DN 50 51 mm	DN 65 63.5 mm	76 mm	DN 80	DN 100 101.6 mm
Valve body with 0.8 RA finish inside								
12	1	Valve body, 2 ports ISO	3135303752		3135303802			
	1	Valve body, 2 ports DIN	9612094003					
	1	Valve body, 3 ports ISO						
	1	Valve body, 3 ports DIN	9612094004		9612094204		9612094304	9612094404
Valve plug with 0.8 RA finish								
19	1	Plug, single, complete, EPDM		3135310911		3135310931		
	1	Plug, single, complete, NBR	3135310902	3135310912			3135310935	3135310942
	1	Plug, single, complete, FPM		3135310913	3135310923	3135310933	3135310936	
19a	1	Stem	3135310071		3135310073	3135310074	3135310078	
19f	1	Washer	3135310101	3135310102		3135310104	3135310106	
19h	1	Screw	3135310111	3135310111	3135310111	3135310111	3135310111	3135310111

		DN 40 38 mm	DN 50 51 mm	DN 65 63.5 mm	76 mm	DN 80	DN 100 101.6 mm
Service kit for product wetted parts, standard							
□	Service Kit EPDM	9611920010	9611920013	9611920016	9611920019	9611920105	9611920022
□	Service Kit NBR	9611920011	9611920014	9611920017	9611920020	9611920106	9611920023
□	Service Kit FPM	9611920012	9611920015	9611920018	9611920021	9611920107	9611920024
Service kit for special lip seal							
♦	Service Kit EPDM	9611920447	9611920451	9611920455	9611920459	9611920463	9611920467
♦	Service Kit NBR	9611920448	9611920452	9611920456	9611920460	9611920464	9611920468
♦	Service Kit FPM	9611920449	9611920453	9611920457	9611920461	9611920465	9611920469
♦	Service kit FEP	9611920450	9611920454	9611920458	9611920462	9611920466	9611920470

Parts marked with □♦ are included in the service kits.

Recommended spare parts: Pos. 3,7 and service kit.

900419/2

Not manufactured anymore

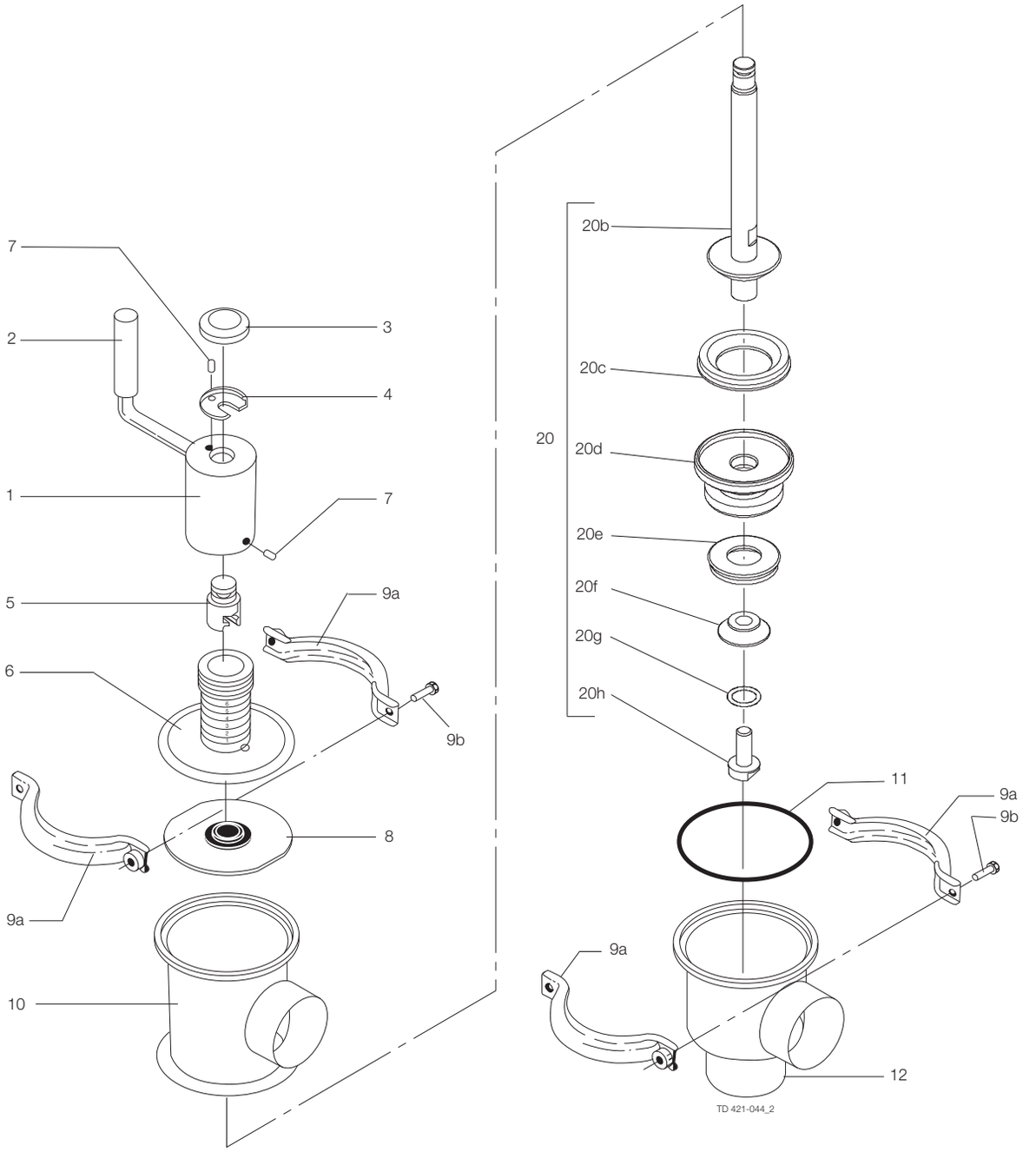

Alternative stem seal

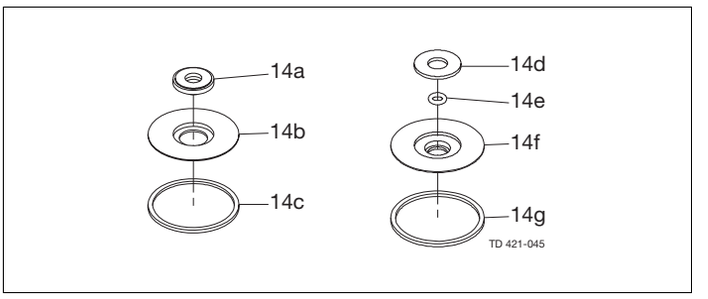

Special lip seal Parts for FEP lip seal

Operating mechanism

Pos	Qty	Denomination	DN 40 38 mm	DN 50 51 mm	DN 65 63.5 mm	76 mm	DN80	DN 100 101.6 mm
	1	Crank mechanism complete	3135305301	3135305301	3135305301			
1	1	Crank	3135304621	3135304621	3135304621	3135304621	3135304621	3135304621
2	1	Handle (included in pos. 1)	3135304951	3135304951	3135304951	3135304951	3135304951	3135304951
3	1	Cap	3135304681	3135304681	3135304681	3135304681	3135304681	3135304681
4	1	Washer	3135304671	3135304671	3135304671	3135304671	3135304671	3135304671
5	1	Stem holder	3135304661	3135304661	3135304661	3135304661	3135304661	3135304661
6	1	Guide	3135304591	3135304591	3135304591	3135304601	3135304601	3135304601
7	2	Set screw	22158192	22158192	22158192	22158192	22158192	22158192

Valve body part

Pos	Qty	Denomination	DN 40 38 mm	DN 50 51 mm	DN 65 63.5 mm	76 mm	DN80	DN 100 101.6 mm
Stem seal								
8 □	1	Lip seal, EPDM						
	1	Lip seal, NBR						
	1	Lip seal, FPM						
Clamp								
9a+b	2	Clamps & screws (period 9209-)	3132000271	3132000271	3132000271	3132000272	3132000272	3132000272
9a	4	Clamp half (period -9209)						
9b	4	Screw (period -9209)						
Valve body								
10	1	Valve body, upper, 1 port ISO	3135300531	3135300541	3135300551	3135300561		3135300581
	1	Valve body, upper, 1 port DIN			9612094701		9612094801	9612094901
	1	Valve body, upper, 2 ports ISO	3135300536	3135300546	3135300556			3135300586
	1	Valve body, upper, 2 ports DIN	9612094502	9612094602				9612094902
11 □♦	1	Valve body packing, EPDM						
	1	Valve body packing, NBR						
	1	Valve body packing, FPM						
	1	Valve body packing, PTFE						
12	1	Valve body, lower, 2 ports ISO	3135303751	3135303761	3135303801	3135303811		3135300261
	1	Valve body, lower, 2 ports DIN		9612094101	9612094201		9612094301	9612094401
	1	Valve body, lower, 3 ports ISO		3135303766	3135303806	3135303816		3135300266
	1	Valve body, lower, 3 ports DIN		9612094102			9612094302	9612094402
Valve plug								
20	1	Plug, double, comp. EPDM (std)	3135303351	3135303361	3135303371	3135303381	3135303384	3135303391
	1	Plug, double, comp. NBR		3135303362		3135303382		
20b	1	Stem	3135303491	3135303492	3135303493	3135303501	3135303503	3135303502
20c ♦○	1	Plug seal, upper, EPDM (std)						
	1	Plug seal, upper, NBR						
	1	Plug seal, upper, FPM						
	1	Plug seal, upper, PTFE						
20d	1	Middle piece	3135303631	3135303641	3135303651	3135303661	9612098401	3135303671
20e ♦○	1	Plug seal, lower, EPDM (std)						
	1	Plug seal, lower, NBR						
	1	Plug seal, lower, FPM						
	1	Plug seal, lower, PTFE						
20f	1	Washer	3135303571	3135303581	3135303591	3135303601	3135303602	3135303611
20g ♦○	1	O-ring, EPDM (std)						
	1	O-ring, NBR						
	1	O-ring, FPM						
	1	O-ring, PTFE						
20h	1	Screw	3135303621	3135303621	3135303621	3135303621	3135303621	3135303621

Not manufactured anymore

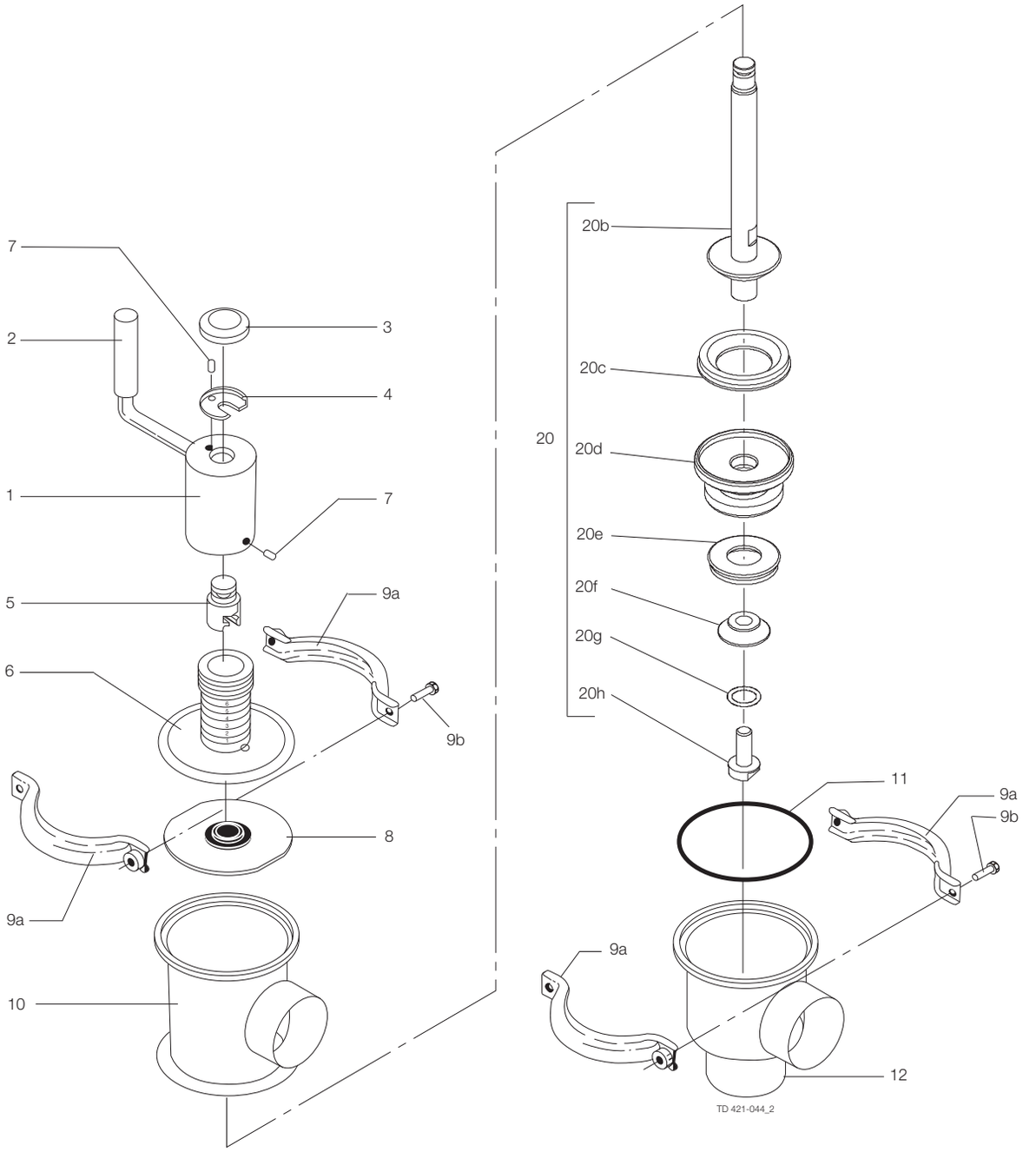

Alternative stem seal

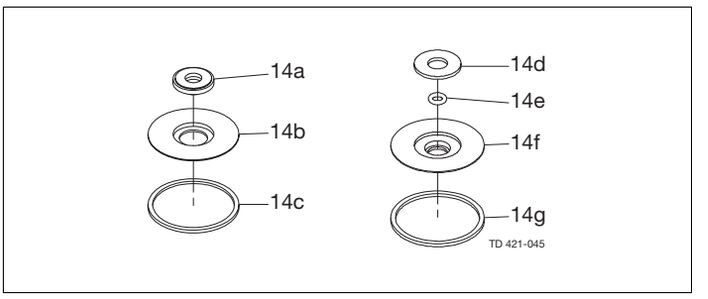

Special lip seal Parts for FEP lip seal

Alternatives

Pos	Qty	Denomination	DN 40 38 mm	DN 50 51 mm	DN 65 63.5 mm	76 mm	DN80	DN 100 101.6 mm
Stem seal								
14	1	Lip seal kit, EPDM (standard)	9611920078	9611920078	9611920078	9611920142	9611920142	9611920142
	1	Lip seal kit, NBR	9611920079	9611920079	9611920079	9611920143	9611920143	9611920143
	1	Lip seal kit, FPM	9611920080	9611920080	9611920080	9611920144	9611920144	9611920144
14a ♦	1	Lip seal, EPDM						
	1	Lip seal, NBR						
	1	Lip seal, FPM						
14b	1	Plate	9612280501	9612280501	9612280501	9612308701	9612308701	9612308701
14c ♦	1	Seal ring, EPDM						
	1	Seal ring, NBR						
	1	Seal ring, FPM						
Stem seal								
14d	1	Washer	3135304521	3135304521	3135304521	3135304522	3135304522	3135304522
14e ♦	1	O-ring FEP/Silicone						
14f	1	Holder	3135304531	3135304531	3135304531	3135304541	3135304541	3135304541
14g	1	Seal ring, PTFE						
Valve body with 0.8 RA finish inside								
10	1	Valve body, upper, 1 port ISO				3135300562		
	1	Valve body, upper, 1 port DIN	9612094503		9612094703		9612094803	9612094903
	1	Valve body, upper, 2 ports ISO						3135300583
	1	Valve body, upper, 2 ports DIN	9612094504	9612094604	9612094704		9612094804	
12	1	Valve body, lower, 2 ports ISO	3135303752		3135303802			
	1	Valve body, lower, 2 ports DIN	9612094003					
	1	Valve body, lower, 3 ports ISO						
	1	Valve body, lower, 3 ports DIN	9612094004		9612094204		9612094304	9612094404
Valve plug with 0.8 RA finish								
	1	Plug, double, complete, EPDM				3135310981	3135310984	
	1	Plug, double, complete, NBR	3135310952	3135310962	3135310972	3135310982	3135310985	3135310992
	1	Plug, double, complete, FPM	3135310953	3135310963	3135310973	3135310983	3135310986	3135310993
13	1	Stem	3135310081	3135310082	3135310083	3135310084		
15	1	Middle piece	3135310091	3135310092			3135310096	3135310095
17	1	Washer	3135310101	3135310102		3135310104	3135310106	
19	1	Screw	3135310111	3135310111	3135310111	3135310111	3135310111	3135310111

		DN 40 38 mm	DN 50 51 mm	DN 65 63.5 mm	76 mm	DN80	DN 100 101.6 mm
Service kit for product wetted parts, standard							
□	Service kit EPDM	9611920025	9611920028	9611920031	9611920034	9611920108	9611920037
□	Service kit NBR	9611920026	9611920029	9611920032	9611920035	9611920109	9611920038
□	Service kit FPM	9611920027	9611920030	9611920033	9611920036	9611920110	9611920039
Service kit for special lip seal							
♦	Service kit EPDM	9611920471	9611920475	9611920479	9611920483	9611920487	9611920491
♦	Service kit NBR	9611920472	9611920476	9611920480	9611920484	9611920488	9611920492
♦	Service kit FPM	9611920473	9611920477	9611920481	9611920485	9611920489	9611920493
♦	Service kit FEP	9611920474	9611920478	9611920482	9611920486	9611920490	9611920494

Parts marked with □♦○ are included in the service kits.

Recommended spare parts: Pos. 3,7 and Service Kit.

900420/2

Not manufactured anymore

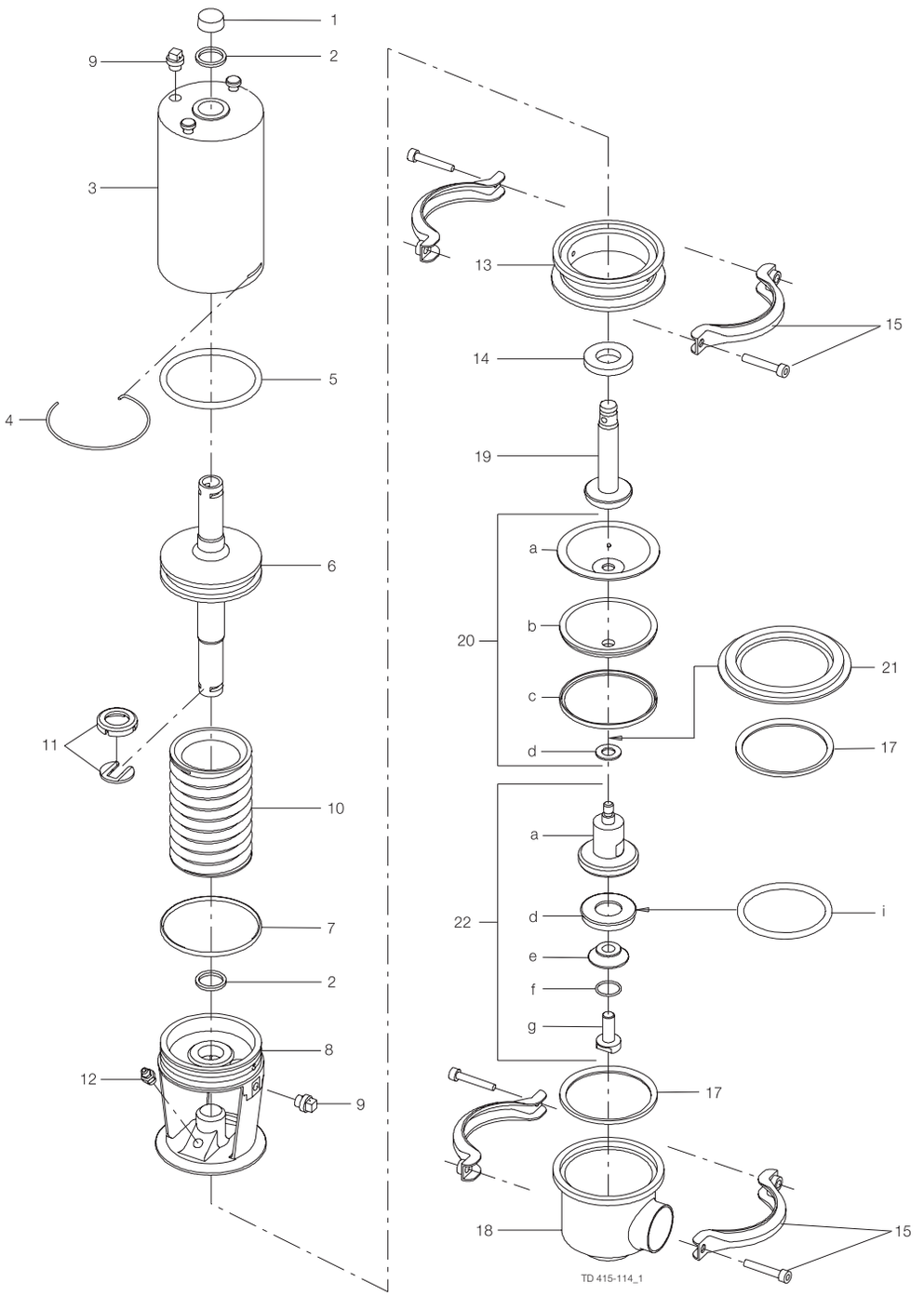

76-101.6 mm
DN80-100

76-101.6 mm
DN80-100

76-101.6 mm
DN80-100

Pos		Qty	Denomination	DN 40 38 mm	DN 50 51 mm	DN 65 63.5 mm	76 mm	DN 80	DN 100 101.6 mm
Actuator									
			Actuator, -1, complete	3135302064	3135302064	3135302064			
			Actuator, -2, complete	3135302066	3135302066	3135302066			
			Actuator, -3, complete				3135302147	3135302147	3135302147
1		1	Cap	3180105256	3180105256	3180105256	3180105255	3180105255	3180105255
2	□	2	O-ring						
3		1	Cylinder	3135301391	3135301391	3135301391	3135301851	3135301851	3135301851
4	□	1	Lock wire						
5	□	1	O-ring						
6		1	Piston, -1, -2	3135306211	3135306211	3135306211	3135306191	3135306191	3135306191
		1	Piston, -3	3135306212	3135306212	3135306212			
7	□	1	O-ring						
9*		2	Plug						
10*		1	Spring assembly, standard (black)	3135306251	3135306251	3135306251	3135306221	3135306221	3135306221
		1	Spring assembly, with extra strong spring (white)	3135306252	3135306252	3135306252	3135306222	3135306222	3135306222
11	□	1	Clip, complete	3135307931	3135307931	3135307931	3135307932	3135307932	3135307932
12		1	Drain tube	3180114441	3180114441	3180114441	3180114441	3180114441	3180114441

* Only for actuators -1 and -2.

Alternatives

Special actuator complete

Actuator, -1 (133mm), (NO)
Actuator, -2 (133mm), (NC)
Actuator, -3 (133mm), (A/A)

Pos	Qty	Denomination	DN 40 38 mm	DN 50 51 mm	DN 65 63.5 mm	76 mm	DN 80	DN 100 101.6 mm
13	1	Intermediate piece	3135308131	3135308131	3135308131	3135308401	3135308401	3135308401
Clamp								
15	2	Clamp & screws (period 9209-)	3132000273	3132000273	3132000273	3132000275	3132000275	3132000275
15a	4	Clamp half (period -9209)						
15b	2	Screw (period -9209)						
15c	2	Screw (period -9209)						
Valve body								
18	1	Valve body, 2 ports, ISO	3135303751	3135303761	3135303801	3135303811		3135300261
	1	Valve body, 2 ports, DIN		9612094101	9612094201		9612094301	9612094401
	1	Valve body, 3 ports, ISO		3135303766	3135303806	3135303816		3135300266
	1	Valve body, 3 ports, DIN		9612094102			9612094302	9612094402

Not manufactured anymore

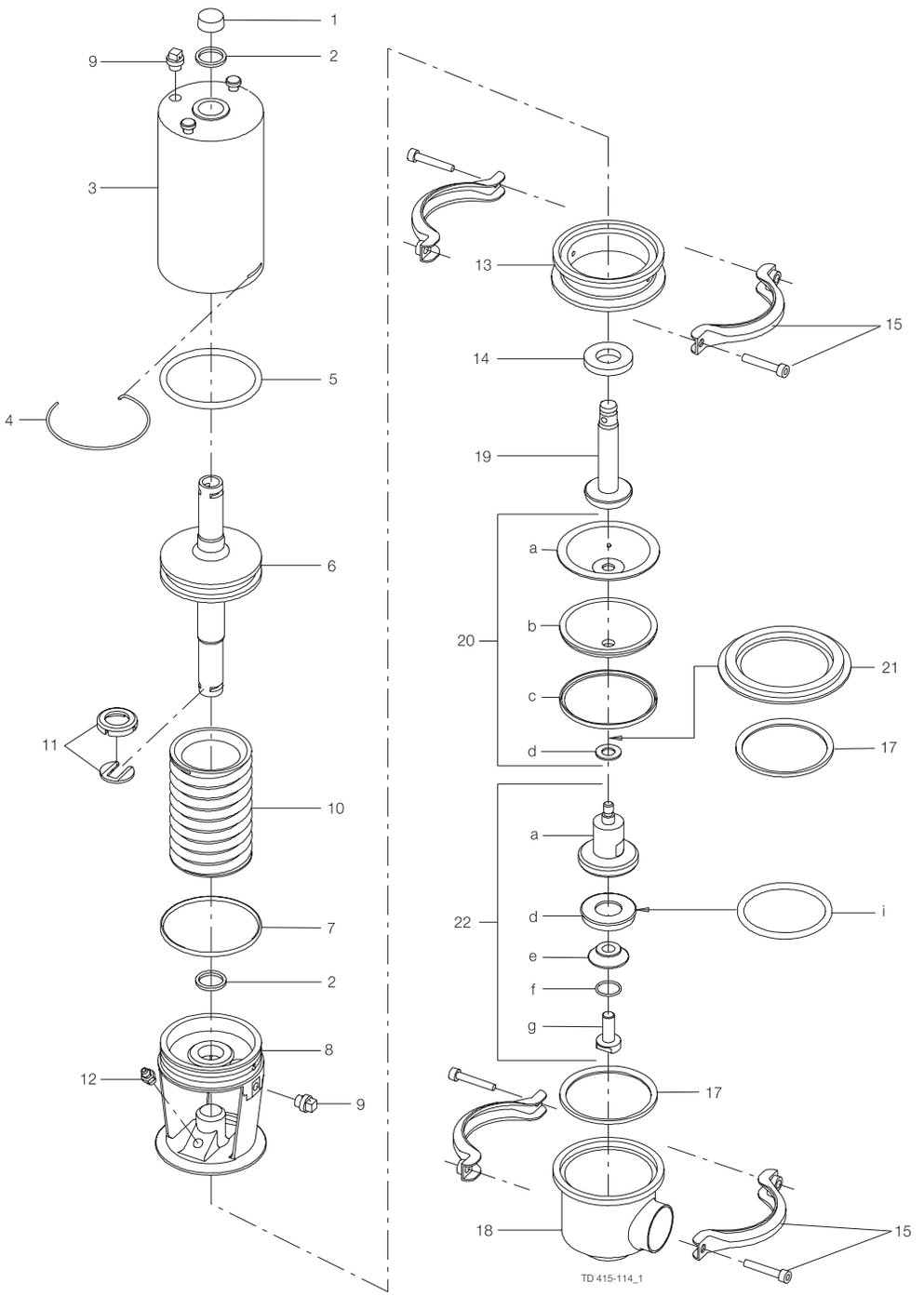

76-101.6 mm
DN80-100

76-101.6 mm
DN80-100

76-101.6 mm
DN80-100

Pos	Qty	Denomination	DN 40 38 mm	DN 50 51 mm	DN 65 63.5 mm	76 mm	DN 80	DN 100 101.6 mm
Valve plug								
14	1	Washer, (period 9911-)	3135308213	3135308213	3135308213	3135308212	3135308212	3135308212
	1	Washer, (period 8605-9910)						
17 ♦	1	Seal ring, EPDM (standard)						
	1	Seal ring, NBR						
	1	Seal ring, FPM						
19	1	Stem, upper	3135308091	3135308091	3135308091	3135308391	3135308391	3135308391
20 ♦	1	Diaphragm set, PTFE, EPDM (complete replacement recommended)	9611920001	9611920001	9611920001	9611920007	9611920007	9611920007
	1	Diaphragm set, NBR	9611920081	9611920081	9611920081	9611920083	9611920083	9611920083
	1	Diaphragm set, FPM	9611920082	9611920082	9611920082	9611920084	9611920084	9611920084
20a	1	Diaphragm support, EPDM						
20b	1	Diaphragm, PTFE						
20c	1	L-seal, EPDM (standard)						
	1	L-seal, NBR						
	1	L-seal, FPM						
20d	1	Stem seal, EPDM (standard)						
	1	Stem seal, NBR						
	1	Stem seal, FPM						
21	1	Diaphragm ring				3135308411	3135308411	3135308411

Pos	Qty	Denomination	DN 40 38 mm	DN 50 51 mm	DN 65 63.5 mm	76 mm	DN 80	DN 100 101.6 mm
Valve plug								
22		Plug, single, comp. EPDM (std)		3135308232	3135308233	3135308481	3135308485	
		Plug, single, comp. NBR	9612309401		9612309403		9612309205	9612309202
		Plug, single, comp. FPM					9612309210	
22a	1	Stem, lower	3135308111	3135308121	3135308151	3135308431	9612188701	3135308461
22d ♦	1	Plug seal, EPDM (std)						
	1	Plug seal, NBR						
	1	Plug seal, FPM						
22e	1	Washer	3135303571	3135303581	3135303591			
22f ♦	1	O-ring, EPDM (std)						
	1	O-ring, NBR						
	1	O-ring, FPM						
22g	1	Screw	3135303621	3135303621	3135303621	3135303621	3135303621	3135303621
22i ♦	1	O-ring, EPDM (std)						
	1	O-ring, NBR						
	1	O-ring, FPM						

		DN 40 38 mm	DN 50 51 mm	DN 65 63.5 mm	76 mm	DN 80	DN 100 101.6 mm
Service kit for actuator							
□	**Service kit**	9611920008	9611920008	9611920008	9611920009	9611920009	9611920009
Service kit for product wetted parts, standard							
♦	**Service kit, EPDM**	9611920040	9611920041	9611920042	9611920043	9611920113	9611920044
♦	**Service kit, NBR**	9611920085	9611920087	9611920089	9611920091	9611920114	9611920093
♦	**Service kit, FPM**	9611920086	9611920088	9611920090	9611920092	9611920115	9611920094

Parts marked with □♦ are included in the service kits.
Recommended spare parts: service kits.

900075/2

Not manufactured anymore

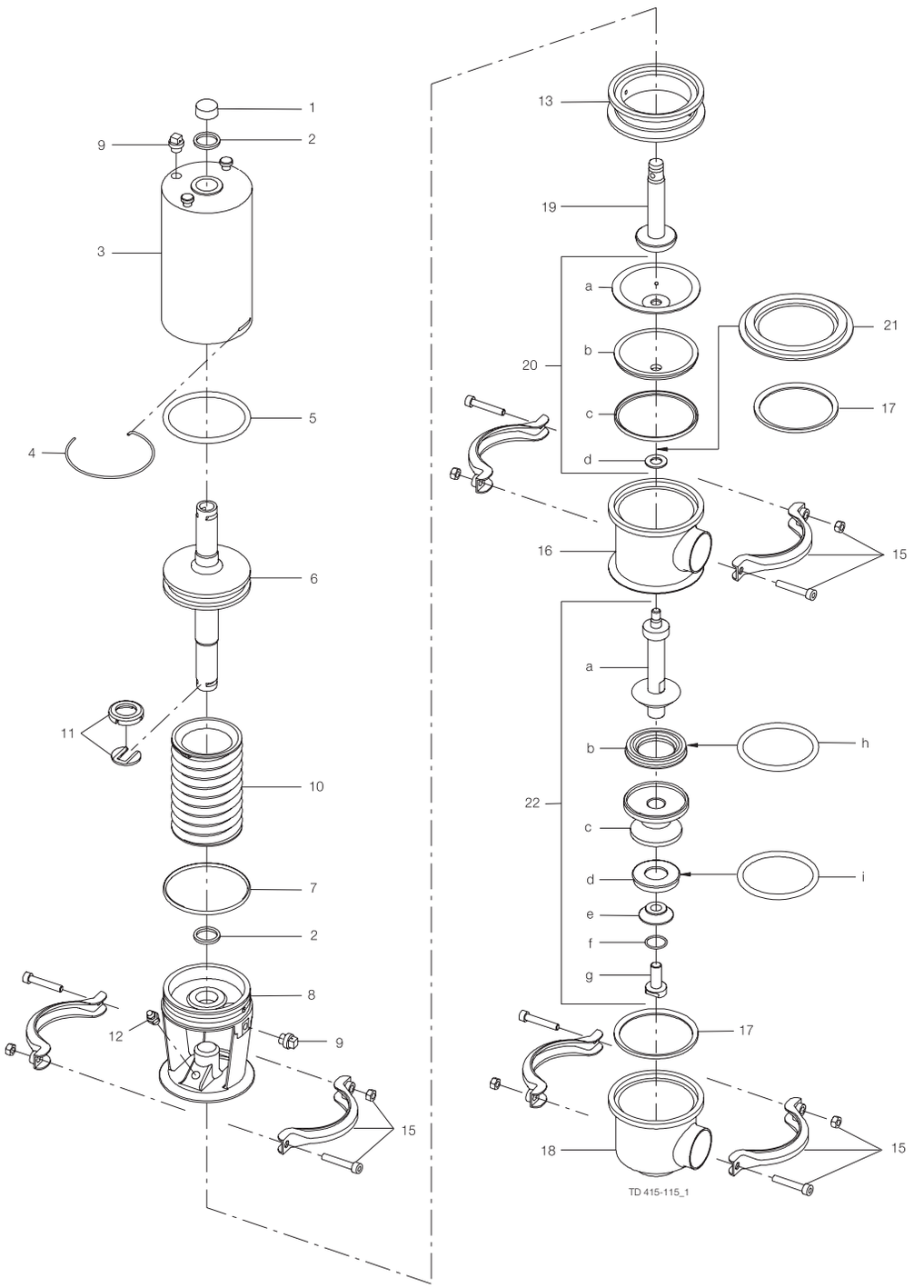

76-101.6 mm
DN80-100

76-101.6 mm
DN80-100

76-101.6 mm
DN80-100

76-101.6 mm
DN80-100

Actuator

Pos		Qty	Denomination	DN 40 38 mm	DN 50 51 mm	DN 65 63.5 mm	76 mm	DN 80	DN 100 101.6 mm
Actuator									
			Actuator, -1, complete	3135302064	3135302064	3135302064			
			Actuator, -2, complete	3135302066	3135302066	3135302066			
			Actuator, -3, complete				3135302147	3135302147	3135302147
1		1	Cap	3180105256	3180105256	3180105256	3180105255	3180105255	3180105255
2	□	2	O-ring						
3		1	Cylinder	3135301391	3135301391	3135301391	3135301851	3135301851	3135301851
4	□	1	Lock wire						
5	□	1	O-ring						
6		1	Piston, -1, -2	3135306211	3135306211	3135306211	3135306191	3135306191	3135306191
		1	Piston, -3	3135306212	3135306212	3135306212			
7	□	1	O-ring						
9*		2	Plug						
10*		1	Spring assembly, standard (black)	3135306251	3135306251	3135306251	3135306221	3135306221	3135306221
		1	Spring assembly, with extra strong spring (white)	3135306252	3135306252	3135306252	3135306222	3135306222	3135306222
11	□	1	Clip, complete	3135307931	3135307931	3135307931	3135307932	3135307932	3135307932
12		1	Drain tube	3180114441	3180114441	3180114441	3180114441	3180114441	3180114441

* Only for actuators -1 and -2.

Alternatives

Special actuator complete

		Actuator, -1 (133mm), (NO)
		Actuator, -2 (133mm), (NC)
		Actuator, -3 (133mm), (A/A)

Valve body part

Pos		Qty	Denomination	DN 40 38 mm	DN 50 51 mm	DN 65 63.5 mm	76 mm	DN 80	DN 100 101.6 mm
13		1	Intermediate piece	3135308131	3135308131	3135308131	3135308401	3135308401	3135308401
Clamp									
15		3	Clamp and screws (period 9209-)	3132000273	3132000273	3132000273	3132000275	3132000275	3132000275
15a		6	Clamp half (period -9209)						
15b		4	Screw (period -9209)						
15c		2	Screw (period -9209)						
Valve body									
16		1	Valve body, upper, 1 port, ISO	3135300531	3135300541	3135300551	3135300561		3135300581
		1	Valve body, upper, 1 port, DIN			9612094701		9612094801	9612094901
		1	Valve body, upper, 2 ports, ISO	3135300536	3135300546	3135300556			3135300586
		1	Valve body, upper, 2 ports, DIN	9612094502	9612094602				9612094902
17	◆	1	Seal ring, EPDM (standard)						
		1	Seal ring, NBR						
		1	Seal ring, FPM						
		2	Seal ring, EPDM (standard)						
		2	Seal ring, NBR						
		2	Seal ring, FPM						
18		1	Valve body, lower, 2 ports, ISO	3135303751	3135303761	3135303801	3135303811		3135300261
		1	Valve body, lower, 2 ports, DIN		9612094101	9612094201		9612094301	9612094401
		1	Valve body, lower, 3 ports, ISO		3135303766	3135303806	3135303816		3135300266
		1	Valve body, lower, 3 ports, DIN		9612094102			9612094302	9612094402
19		1	Stem, upper	3135308091	3135308091	3135308091	3135308391	3135308391	3135308391
20	◆	1	Diaphragm set, PTFE, EPDM (complete replacement recommended)	9611920001	9611920001	9611920001	9611920007	9611920007	9611920007
		1	Diaphragm set, NBR	9611920081	9611920081	9611920081	9611920083	9611920083	9611920083
		1	Diaphragm set, FPM	9611920082	9611920082	9611920082	9611920084	9611920084	9611920084

Not manufactured anymore

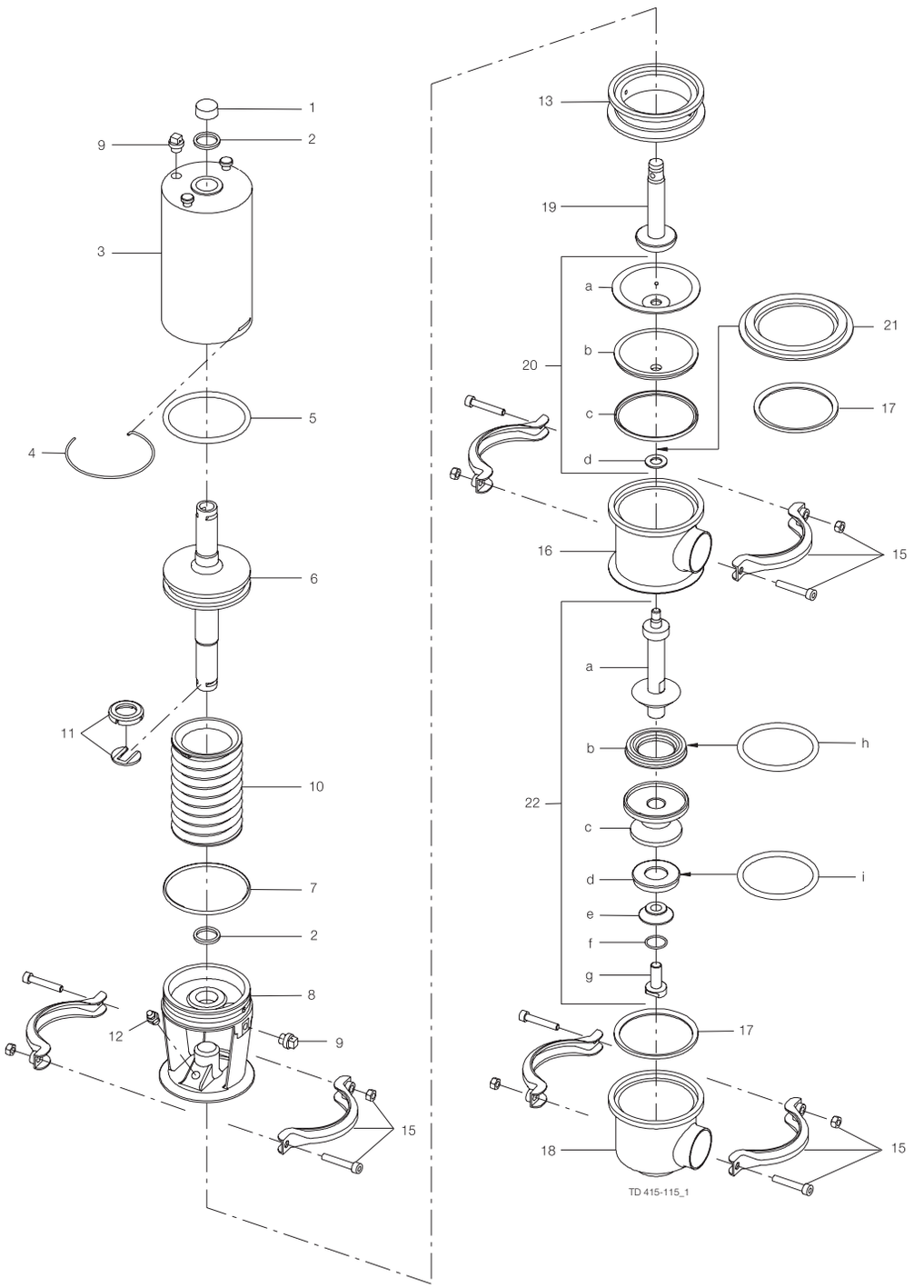

76-101.6 mm
DN80-100

76-101.6 mm
DN80-100

76-101.6 mm
DN80-100

76-101.6 mm
DN80-100

Pos	Qty	Denomination	DN 40 38 mm	DN 50 51 mm	DN 65 63.5 mm	76 mm	DN 80	DN 100 101.6 mm
20a	1	Diaphragm support, EPDM						
20b	1	Diaphragm for PTFE						
20c	1	L-seal, EPDM (standard)						
	1	L-seal, NBR						
	1	L-seal, FPM						
20d	1	Stem seal, EPDM (standard)						
	1	Stem seal, NBR						
	1	Stem seal, FPM						
21	1	Diaphragm ring				3135308411	3135308411	3135308411

Valve body part

Pos	Qty	Denomination	DN 40 38 mm	DN 50 51 mm	DN 65 63.5 mm	76 mm	DN 80	DN 100 101.6 mm
Valve plug								
22		Plug, double, complete EPDM (period 9911-) (standard)		9612540004	3135308243			3135308562
		Plug, double, complete EPDM (period 8605-9910) (standard)						
		Plug, double, complete NBR (period 9911-)	9612540002	9612540005	9612309303	9612309101	9612309105	9612309102
		Plug, double, complete NBR (period 8605-9910)						
		Plug, double, complete FPM (period 9911-)	9612540003					
		Plug, double, complete FPM (period 8605-9910)						
22a	1	Stem, lower (period 9911-)	3135308103	3135308104	3135308141	3135308501	3135308505	3135308102
	1	Stem, lower (period 8605-9910)	3135308101	3135308102	3135308141	3135308501	3135308505	3135308102
22b ♦	1	Plug seal, EPDM (standard)						
	1	Plug seal, NBR						
	1	Plug seal, FPM						
22c	1	Middle piece, (period 9911-)	9612497201	9612497301	3135303651	3135308541	9612188801	
	1	Middle piece, (period 8605-9910)						
22d ♦	1	Plug seal, EPDM (standard)						
	1	Plug seal, NBR						
	1	Plug seal, FPM						
22e	1	Washer	3135303571	3135303581	3135303591			
22f ♦	1	O-ring, EPDM						
	1	O-ring, NBR						
	1	O-ring, FPM						
22g	1	Screw						
22h ♦	1	O-ring, EPDM (standard)						
	1	O-ring, NBR						
	1	O-ring, FPM						
22i	1	O-ring, EPDM (standard)						
	1	O-ring, NBR						
	1	O-ring, FPM						

		DN 40 38 mm	DN 50 51 mm	DN 65 63.5 mm	76 mm	DN 80	DN 100 101.6 mm
Service kit for actuator							
□	**Service kit**	9611920008	9611920008	9611920008	9611920009	9611920009	9611920009
Service kit for product wetted parts, standard							
♦	**Service kit EPDM**	9611920045	9611920046	9611920047	9611920048	9611920116	9611920049
♦	**Service kit NBR**	9611920095	9611920097	9611920099	9611920101	9611920117	9611920103
♦	**Service kit FPM**	9611920096	9611920098	9611920100	9611920102	9611920120	9611920104

Parts marked with □♦ are included in the service kits.
Recommended spare parts: service kits.

900076/2

Not manufactured anymore

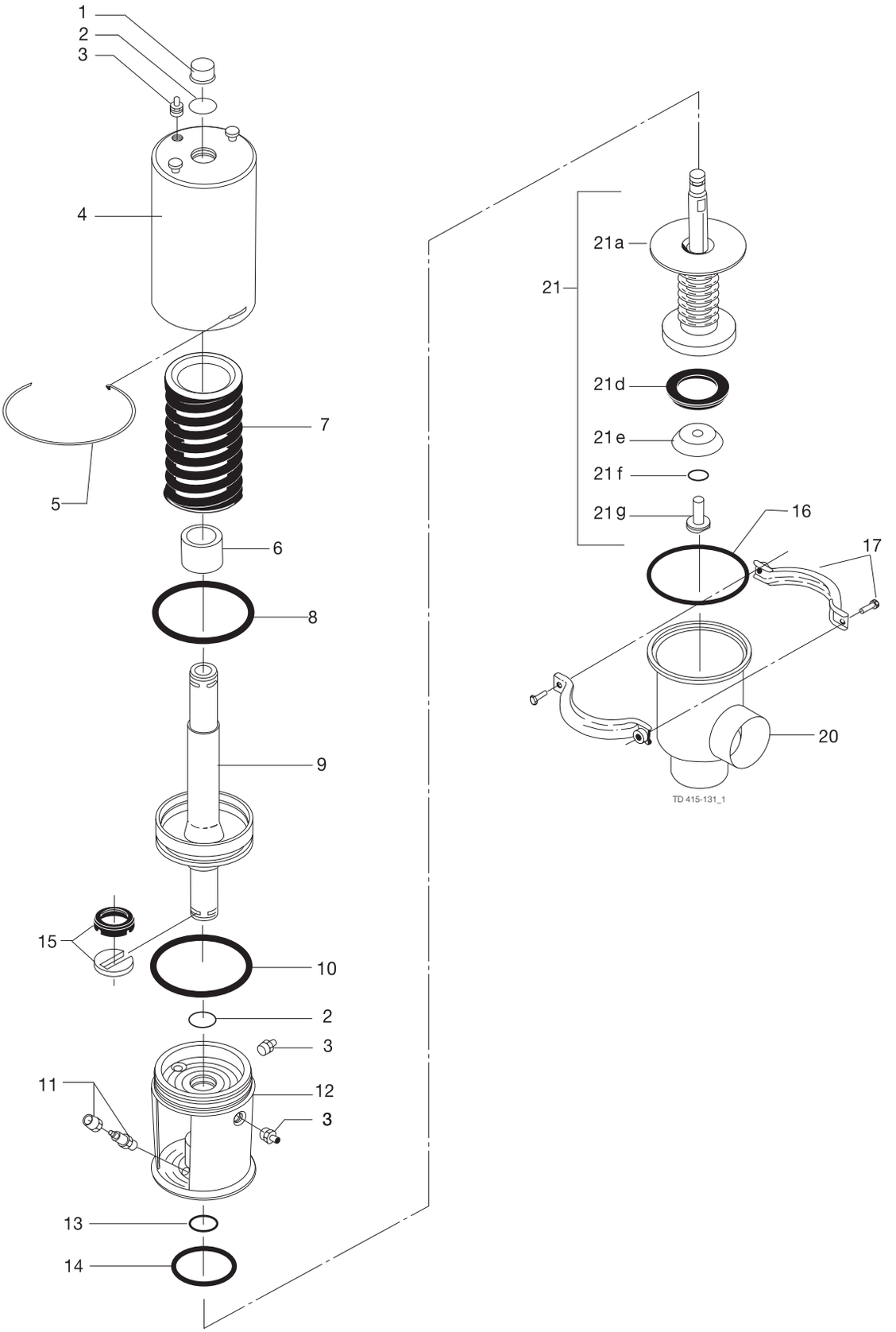

Actuator

Pos		Qty	Denomination	DN 40 38 mm	DN 50 51 mm	DN 65 63.5 mm
			Actuator, -3, complete	9612188303	9612188303	9612188303
1		1	Cap	3180105256	3180105256	3180105256
2	□	2	O-ring, NBR			
3		2	Deair screw (plug)			
4		1	Cylinder	3135301391	3135301391	3135301391
5	□	1	Lock wire			
6		1	Stop ring	9612187801	9612187801	9612187801
7		1	Spring, assembly standard (black)	3135306251	3135306251	3135306251
		1	Spring, assembly with strong spring (white)	3135306252	3135306252	3135306252
8	□	1	O-ring, NBR			
9		1	Piston, for NO and NC	3135306211	3135306211	3135306211
		1	Piston, for Air/Air	3135306212	3135306212	3135306212
10	□	1	O-ring, NBR			
11		1	Drain tube	3180114441	3180114441	3180114441
13	□	1	O-ring			
14	□	1	O-ring			
15	□	1	Clip complete	3135307931	3135307931	3135307931

Valve body part

Pos		Qty	Denomination	DN 40 38 mm	DN 50 51 mm	DN 65 63.5 mm
Seal rings						
16	◆	1	Seal ring, EPDM (standard)			
		1	Seal ring, NBR			
		1	Seal ring, FPM			
		1	Seal ring, PTFE			
Clamp						
17		1	Clamp complete	3132000271	3132000271	3132000271
Valve body						
20		1	Valve body, 2 ports ISO		9612183301	3135303801
		1	Valve body, 2 ports DIN			9612094201
		1	Valve body, 3 ports ISO		9612183302	3135303806

Not manufactured anymore

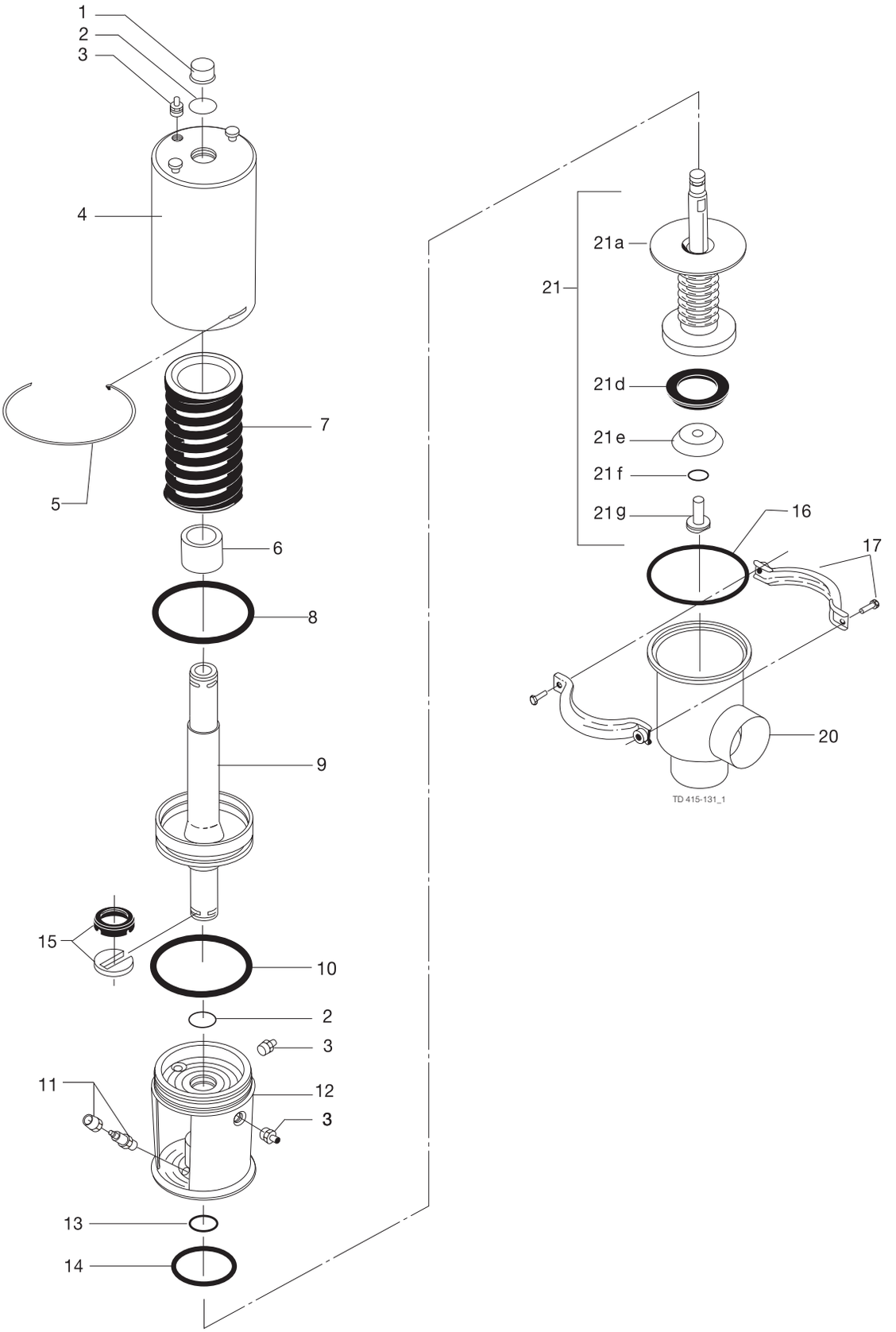

Pos	Qty	Denomination	DN 40 38 mm	DN 50 51 mm	DN 65 63.5 mm
Valve plug					
21	1	Plug, complete EPDM (standard) (period 9911-)	9612585304	9612585305	9612585306
	1	Plug, complete NBR (period 9911-)	9612585310	9612585311	9612585312
	1	Plug, complete FPM (period 9911-)	9612585316		
	1	Plug, single, complete EPDM (period 9512-9910)			
	1	Plug, single, complete NBR (period 9512-9910)			
	1	Plug, single, complete FPM (period 9512-9910)			
	1	Plug, single, complete PTFE (period 9512-9910)			
	1	Plug, double, complete EPDM (period 9512-9910)			
	1	Plug, double, complete NBR (period 9512-9910)			
	1	Plug, double, complete FPM (period 9512-9910)			
	1	Plug, double, complete PTFE (period 9512-9910)			
21a	1	Stem, single (period 9911-)	9612585204	9612585205	9612585206
	1	Stem, single (period 9512-9910)			
	1	Stem, double (period 9512-9910)			
21d ♦	1	Plug seal, EPDM (standard)			
	1	Plug seal, NBR			
	1	Plug seal, FPM			
	1	Plug seal, PTFE			
21e	1	Washer	3135303571	3135303581	3135303591
21f ♦	1	O-ring, EPDM (standard)			
	1	O-ring, NBR			
	1	O-ring, FPM			
	1	O-ring, PTFE			
21g	1	Screw	3135303621	3135303621	3135303621

	Denomination	DN 40 38 mm	DN 50 51 mm	DN 65 63.5 mm
Service kit for actuator				
□	**Service kit**	**9611920255**	**9611920255**	**9611920255**
Service kit for product wetted parts, standard				
♦	**Service kit EPDM**	**9611920322**	**9611920326**	**9611920330**
♦	**Service kit NBR**	**9611920323**	**9611920327**	**9611920331**
♦	**Service kit FPM**	**9611920324**	**9611920328**	**9611920332**
♦	**Service kit PTFE**	**9611920325**	**9611920329**	**9611920333**

Parts marked with □♦ are included in the service kit.
Recommended spare parts: service kits.

900-099/3

Not manufactured anymore

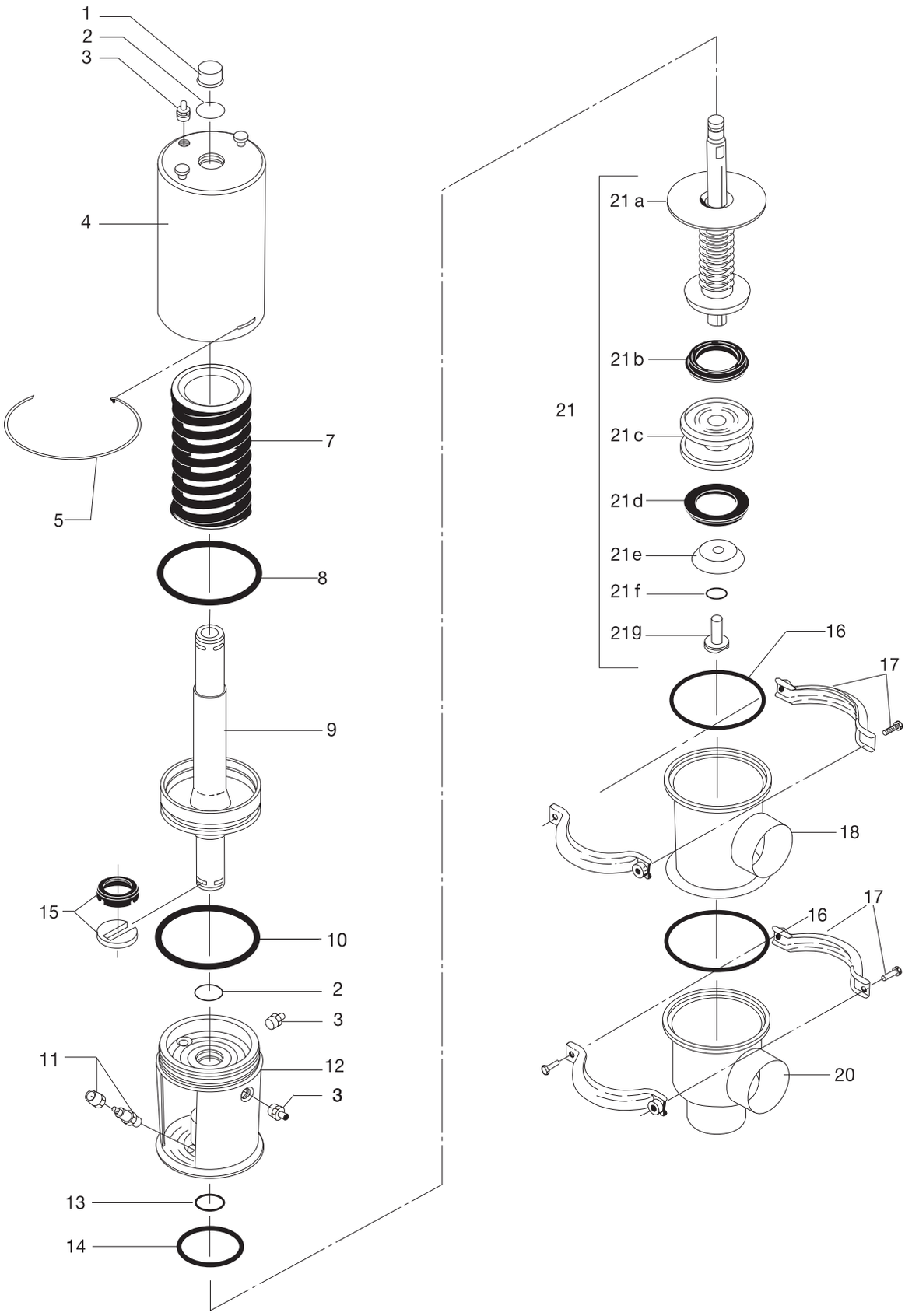

Pos		Qty	Denomination	DN 40 38 mm	DN 50 51 mm	DN 65 63.5 mm
Actuator						
			Actuator, -3, complete	9612188403	9612188403	9612188403
1		1	Cap	3180105256	3180105256	3180105256
2	□	2	O-ring, NBR			
3		2	Deair screw (plug)			
4		1	Cylinder	3135301391	3135301391	3135301391
5	□	1	Lock wire			
7		1	Spring assembly, standard (black)	3135306251	3135306251	3135306251
		1	Spring assembly, with strong spring (white)	3135306252	3135306252	3135306252
8	□	1	O-ring, NBR			
9		1	Piston, for NO and NC	3135306211	3135306211	3135306211
		1	Piston, for Air/Air	3135306212	3135306212	3135306212
10	□	1	O-ring, NBR			
11		1	Drain tube	3180114441	3180114441	3180114441
13	□	1	O-ring			
14	□	1	O-ring			
15	□	1	Clip complete	3135307931	3135307931	3135307931

Valve body part

Pos		Qty	Denomination	DN 40 38 mm	DN 50 51 mm	DN 65 63.5 mm
Seal rings						
16	◆	2	Seal ring, EPDM (standard)			
		2	Seal ring, NBR			
		2	Seal ring, FPM			
		2	Seal ring, PTFE			
Clamp						
17		2	Clamp complete	3132000271	3132000271	3132000271
Valve body						
18		1	Upper valve body, 1 port ISO	3135300531	3135300541	3135300551
		1	Upper valve body, 1 port DIN			9612094701
		1	Upper valve body, 2 ports ISO	3135300536	3135300546	3135300556
		1	Upper valve body, 2 ports DIN	9612094502	9612094602	
20		1	Lower valve body, 2 ports ISO	3135303751	3135303761	3135303801
		1	Lower valve body, 2 ports DIN		9612094101	9612094201
		1	Lower valve body, 3 ports ISO		3135303766	3135303806
		1	Lower valve body, 3 ports, DIN		9612094102	

Not manufactured anymore

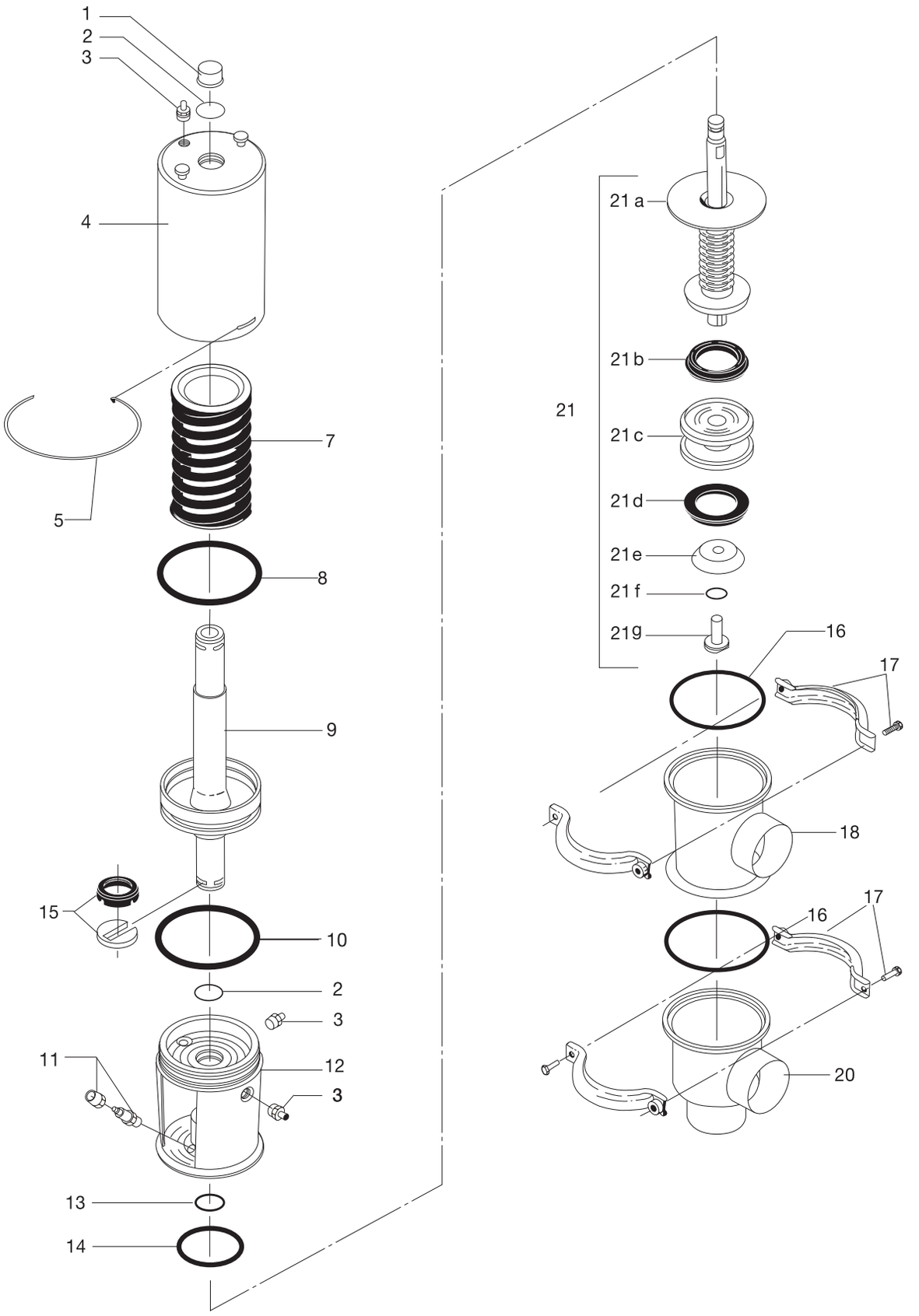

Pos	Qty	Denomination	DN 40 38 mm	DN 50 51 mm	DN 65 63.5 mm
Valve plug					
	1	Plug, complete NBR (period 9911-)	9612585510	9612585511	
	1	Plug, complete FPM (period 9911-)	9612585516		
	1	Plug, complete PTFE (period 9911-)	9612585522		9612585524
	1	Plug, single, complete EPDM (standard) (period 9512-9910)			
	1	Plug, single, complete NBR (period 9512-9910)			
	1	Plug, single, complete FPM (period 9512-9910)			
	1	Plug, single, complete PTFE (period 9512-9910)			
	1	Plug, double, complete EPDM (standard) (period 9512-9910)			
	1	Plug, double, complete NBR (period 9512-9910)			
	1	Plug, double, complete FPM (period 9512-9910)			
	1	Plug, double, complete PTFE (period 9512-9910)			
21a	1	Stem, (period 9911-)	9612585404	9612585405	9612585406
	1	Stem, single (period 9512-9910)			
	1	Stem, double (period 9512-9910)			
21b ♦	1	Plug seal upper, EPDM (standard)			
	1	Plug seal upper, NBR			
	1	Plug seal upper, FPM			
	1	Plug seal upper, PTFE			
21c	1	Middle piece, (period 9911-)	9612497201	9612497301	3135303651
	1	Middle piece, (period 9512-9910)			
21d ♦	1	Plug seal lower, EPDM (standard)			
	1	Plug seal lower, NBR			
	1	Plug seal lower, FPM			
	1	Plug seal lower, PTFE			
21e	1	Washer	3135303571	3135303581	3135303591
21f ♦	1	O-ring, EPDM (standard)			
	1	O-ring, NBR			
	1	O-ring, FPM			
	1	O-ring, PTFE			
21g	1	Screw, (period 9911-)	3135303621	3135303621	3135303621
	1	Screw, (period 9512-9910)			

		DN 40 38 mm	DN 50 51 mm	DN 65 63.5 mm
Service kit for actuator				
□	**Service kit**	9611920255	9611920255	9611920255
Service kit for product wetted parts, standard				
♦	**Service kit EPDM**	9611920334	9611920338	9611920342
♦	**Service kit NBR**		9611920339	
♦	**Service kit FPM**	9611920336	9611920340	9611920344
♦	**Service kit PTFE**	9611920337	9611920341	9611920345

Parts marked with □♦ are included in the service kit.
Recommended spare parts: service kits.

900100/3

Not manufactured anymore

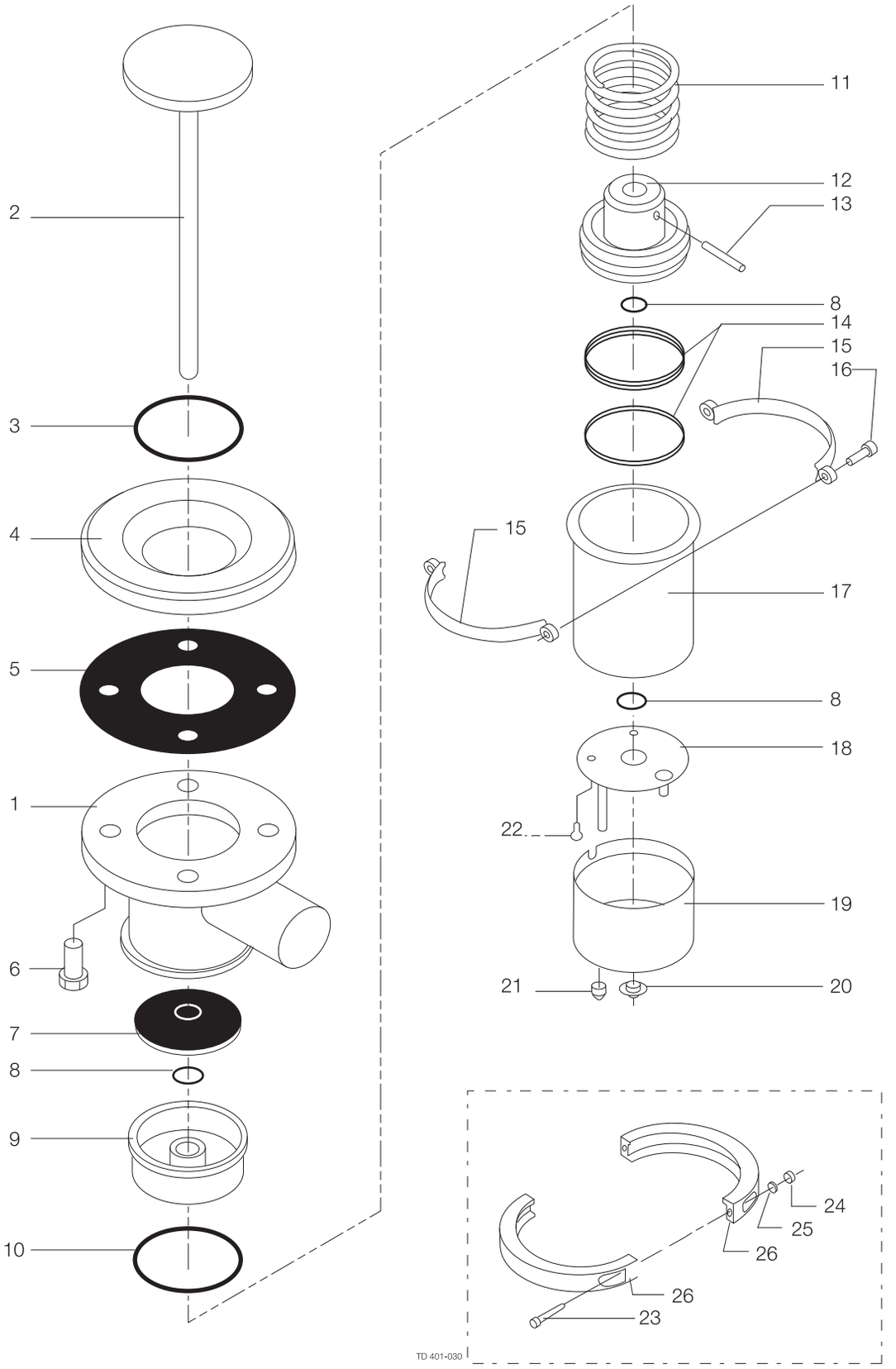

AISI 316

Pos		Qty	Denomination	9611430911 51 mm	9611430912 63.5 mm	9611430913 76 mm	9611430914 101.6 mm
1		1	Valve house				
2		1	Valve spindle				
3	□	1	O-ring, NBR	9611990093	9611990043	9611990043	9611990031
		1	O-ring, EPDM	9611990543	99005102	99005102	9611990395
		1	O-ring, FPM	9611993152	9611991254	9611991254	9611991347
4		1	Mating flange				
5	□	1	Seal, NBR	9611990157	9611990158	9611990158	9611990159
		1	Seal, EPDM	9611991212	9611992616	9611992616	9611992617
		1	Seal, FPM	9611992613	9611991287	9611991287	9611992614
6		4	Hexagon screw	9611991216	9611991217	9611991217	9611990356
7	□	1	Lip seal, NBR (Std.)	9611403140	9611403140	9611403140	9611403140
		1	Lip seal, EPDM	9611403141	9611403141	9611403141	9611403141
		1	Lip seal, FPM	9611403142	9611403142	9611403142	9611403142
8	♦	3	O-ring, NBR	9611990049	9611990049	9611990049	9611990049
9		1	Bottom timber	9611402338	9611402338	9611402338	9611402501
10	♦	1	O-ring, NBR	9611990021	9611990021	9611990021	9611990044
11		1	Spring	9611990411	9611990411	9611990411	9611990411
12		1	Piston				
13		1	Pin connex	9611990637	9611990637	9611990637	9611990637
14	♦	2	U-packing				
		1	U-packing				
15		2	Clamp half				
16		2	Allen screw				
17		1	Air cylinder				
18		1	Plate				
19		1	Cap	9611404920	9611404920	9611404920	9611404920
20		1	Rubber plug				
21		2	Top nut	9611991143	9611991143	9611991143	9611991143
22		1	Screw	9611990218	9611990218	9611990218	9611990218
23		2	Allen screw				9611990203
24		2	Nut				9611990204
25		2	Washer				
26		2	Clamp half				

		51 mm	63.5 mm	76 mm	101.6 mm
Service kits for product wetted parts					
□	**Service kit, NBR**	**9611924033**	**9611924034**	**9611924034**	**9611924035**
□	**Service kit, EPDM**	**9611924036**	**9611924037**	**9611924037**	**9611924038**
□	**Service kit, FPM**	**9611924039**	**9611924040**	**9611924040**	

Parts marked with □♦ are included in the service kit.

Recommended spare parts: Service kit.

900-426

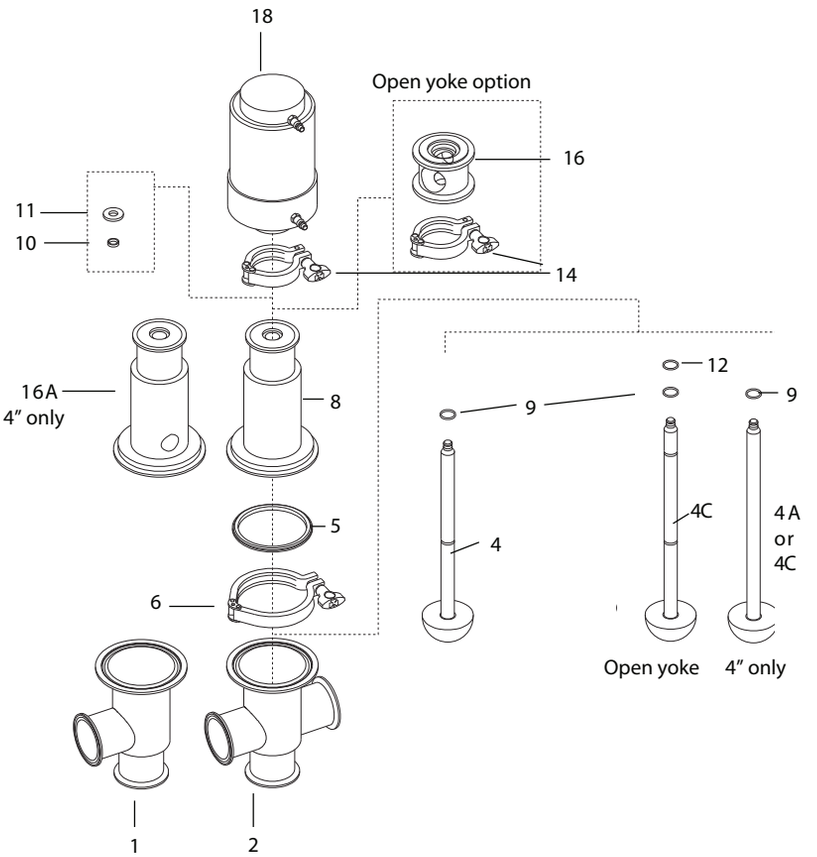
18
Open yoke option
16
11
10
14
16A
4" only
8
12
9
9
5
4
4C
4 A
or
4C
6
Open yoke
4" only
1
2

Pos		Qty	Denomination	1”	1 1/2”	2”	2 1/2”	3”	4”
1		1	Lower body model 10	NA	NA	NA	NA	NA	NA
2		1	Lower body model 30	NA	NA	NA	NA	NA	NA
4A		1	Valve plug, BUNA	772017	776834	776807	776863	770292	772622
		1	Valve plug, EPDM	NA	NA	770964	771764	770613	770591
		1	Valve plug, SFY	NA	771977	772042	771902	772036	772623
5	□♦	1	Body gasket, BUNA	755415	755415	755416	755417	755418	755421
	□♦	1	Body gasket, EPDM	750157	750157	750162	751799	750811	750686
	□♦	1	Body gasket, SFY	750667	750667	750497	750209	750609	750738
6		1	Body clamp	212205	212205	212206	212207	212208	212209
8		1	Bonnet 10 & 30	NA	NA	NA	NA	NA	NA
9	□	1	Stem O-ring, BUNA	755351	755351	755351	755357	755357	300543
	□	1	Stem O-ring, EPDM	750036	750036	750036	750037	750037	300016
	□	1	Stem O-ring, SFY	750172	750172	750172	750173	750173	300061
10	□♦	1	Bonnet O-ring, BUNA	755357	755357	755357	755370	755370	755370
	□♦	1	Bonnet O-ring, EPDM	750037	750037	750037	750132	750132	750132
	□♦	1	Bonnet O-ring, SFY	750173	750173	750173	750077	750077	750077
11		1	Ss washer	754781	754781	754781	754776	754776	754776
12	♦	1	Stem O-ring, BUNA	755388	755388	755388	755542	755542	NA
	♦	1	Stem O-ring, EPDM	750004	750004	750004	750728	750728	NA
	♦	1	Stem O-ring, SFY	750084	750084	750084	751715	751715	NA
14		1	Actuator clamp	212196	212196	212196	212196	212196	212196
15		1	See actuator section						
16		1	Open yoke	NA	NA	NA	NA	NA	NA
16A		1	OY bonnet	NA	NA	NA	NA	NA	NA

Parts marked with □♦ are included in the service kits.

		1”	1 1/2”	2”	2 1/2”	3”	4”
□	161 Service Kit BUNA	9613990184	9613990184	9613990187	9613990190	9613990193	9613990196
□	161 Service Kit EPDM	9613990185	9613990185	9613990188	9613990191	9613990194	9613990197
□	161 Service Kit SFY	9613990186	9613990186	9613990189	9613990192	9613990195	9613990198
♦	161OY Service Kit BUNA	9613990199	9613990199	9613990202	9613990205	9613990208	9613990211
♦	161OY Service Kit EPDM	9613990200	9613990200	9613990203	9613990206	9613990209	9613990212
♦	161OY Service Kit SFY	9613990201	9613990201	9613990204	9613990207	9613990210	9613990213

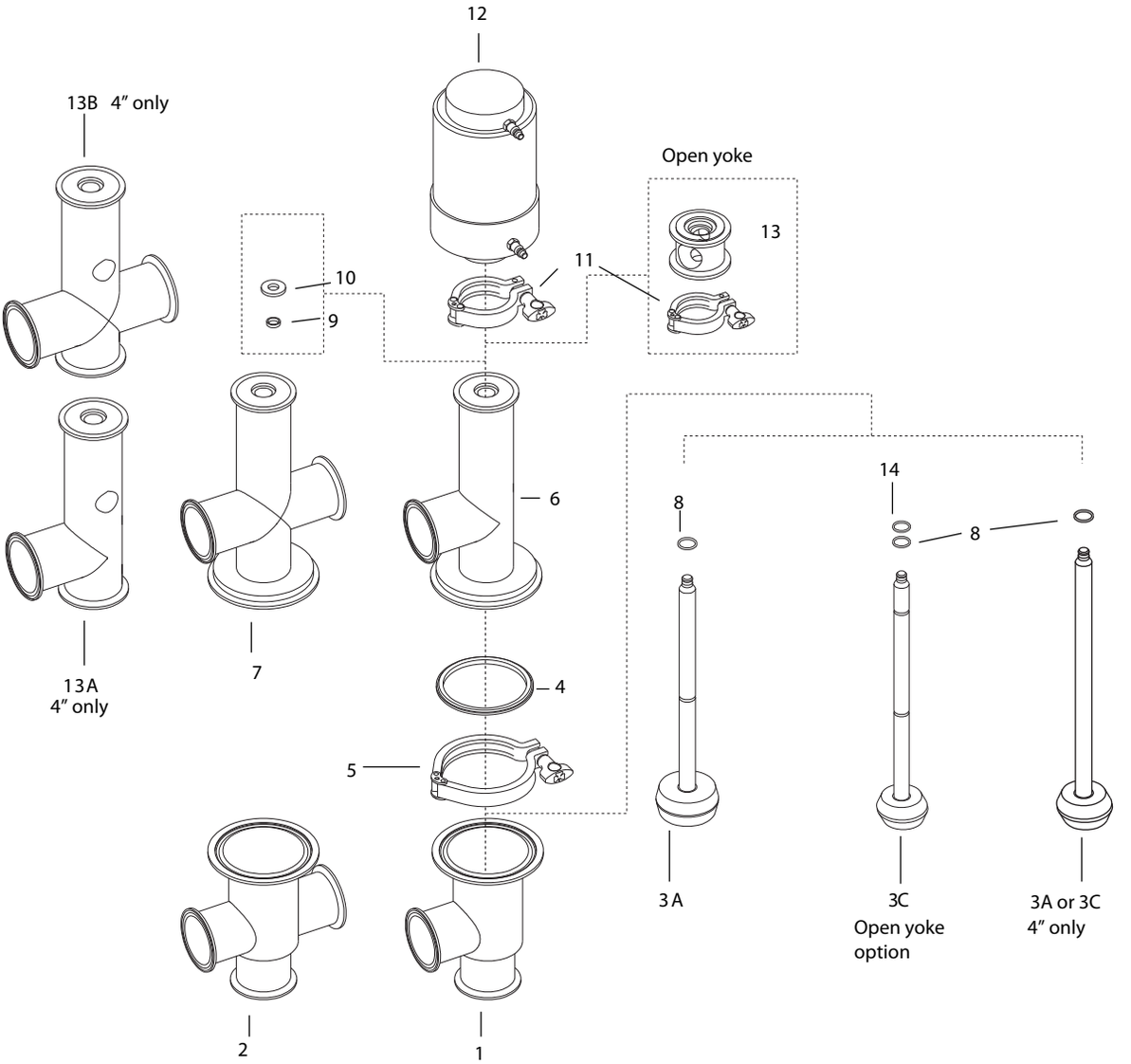
12
13B 4″ only
Open yoke
13
10
9
11
6
8
14
8
4
5
13A
4″ only
7
3A
3C
Open yoke
option
3A or 3C
4″ only
2
1

Pos		Qty	Denomination	1 1/2”	2”	2 1/2”	3”	4”
1		1	Lower body models, 21 & 41	NA	NA	NA	NA	NA
2		1	Lower body models, 23 & 43	NA	NA	NA	NA	NA
3A		1	Valve plug, BUNA	770810	776823	770511	770520	770100
		1	Valve plug, EPDM	772678	772410	770413	770555	770580
		1	Valve plug, SFY	772240	772240	772333	770574	770576
3C		1	OY valve plug BUNA	773090	773081	771872	771653	770100
4	□♦	1	Body gasket, BUNA	755415	755416	755417	755418	755421
	□♦	1	Body gasket, EPDM	750157	750062	751799	750811	750686
	□♦	1	Body gasket, SFY	750667	750497	750209	750209	750738
5		1	Body clamp	212205	212206	212207	212208	212209
6		1	Upper body models, 21 & 23	NA	NA	NA	NA	NA
7		1	Upper body models, 41 & 43	NA	NA	NA	NA	NA
8	□	1	Stem O-ring, BUNA	755351	755351	755357	755357	300543
	□	1	Stem O-ring, EPDM	750036	750036	750037	750037	300016
	□	1	Stem O-ring, SFY	750172	750172	750173	750173	300061
9	□♦	1	Bonnet O-ring, BUNA	755357	755357	755370	755370	755370
	□♦	1	Bonnet O-ring, EPDM	750037	750037	750132	750132	750132
	□♦	1	Bonnet O-ring, SFY	750173	750173	750077	750077	750077
10		1	Ss washer	754781	754781	754776	754776	754776
11		1	Actuator clamp	212196	212196	212196	212196	212196
12			See actuator section					
13		1	Open yoke	NA	NA	NA	NA	NA
13A		1	Open yoke body models, 21 & 23	NA	NA	NA	NA	NA
13B		1	Open yoke body models, 41 & 43	NA	NA	NA	NA	NA
14	♦	1	Stem O-ring, BUNA	755388	755388	755542	755542	NA
	♦	1	Stem O-ring, EPDM	750004	750004	750728	750728	NA
	♦	1	Stem O-ring, SFY	750084	750084	751715	751715	NA

Parts marked with □♦ are included in the service kits.

		1 1/2”	2”	2 1/2”	3”	4”
□	161 Service Kit BUNA	9613990184	9613990187	9613990190	9613990193	9613990196
□	161 Service Kit EPDM	9613990185	9613990188	9613990191	9613990194	9613990197
□	161 Service Kit SFY	9613990186	9613990189	9613990192	9613990195	9613990198
♦	161OY Service Kit BUNA	9613990199	9613990202	9613990205	9613990208	9613990211
♦	161OY Service Kit EPDM	9613990200	9613990203	9613990206	9613990209	9613990212
♦	161OY Service Kit SFY	9613990201	9613990204	9613990207	9613990210	9613990213

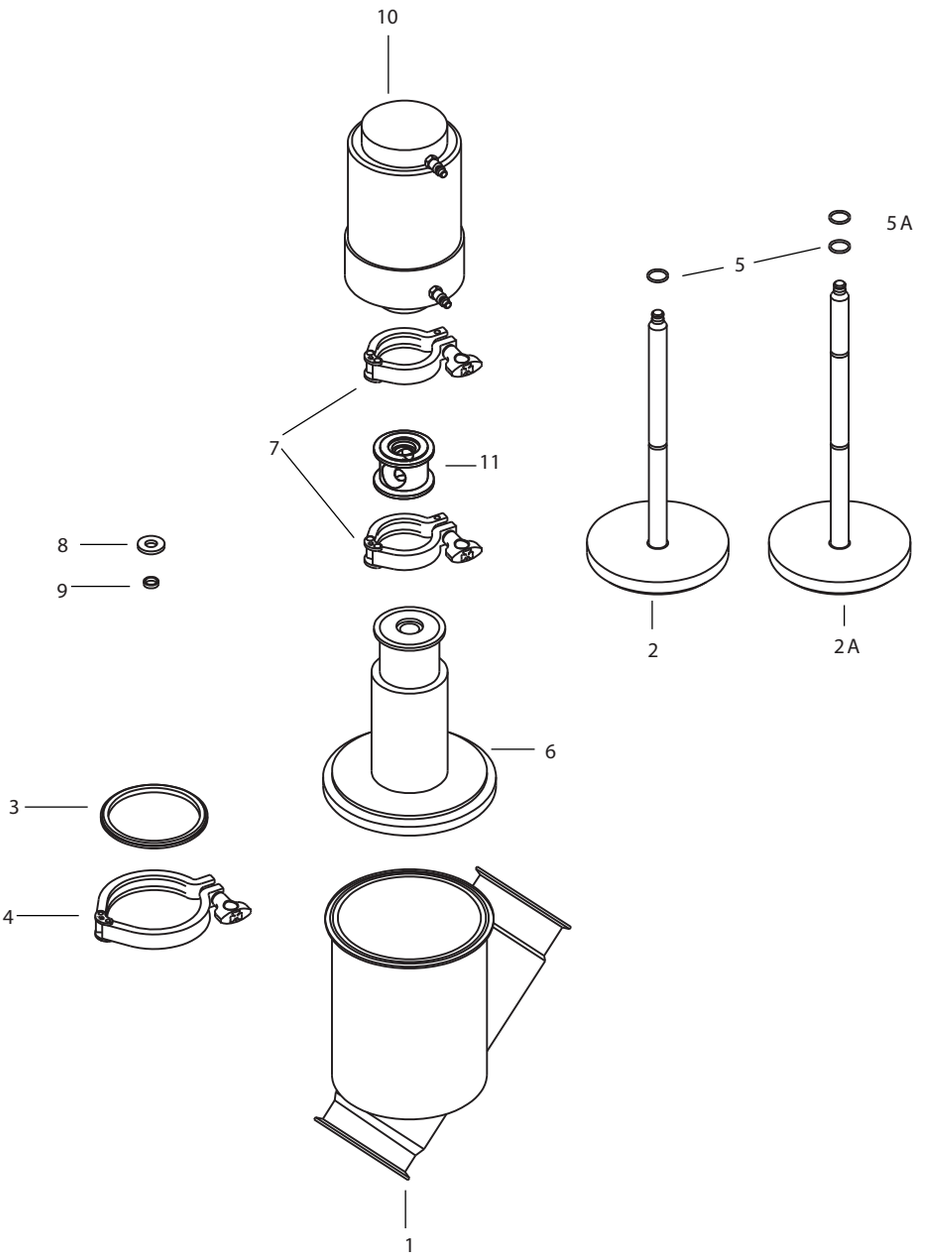
10
5A
5
7
11
8
9
2
2A
6
3
4
1

Pos		Qty	Denomination	1”	1 1/2”	2”	2 1/2”	3”	4”
1		1	Valve, “Y” Body	621066	622268	623368	620754	620754	620235
2		1	Valve, plug assembly, BUNA	770333	770515	770472	772074	778257	770712
		1	Valve, plug assembly, EPDM	NA	771354	NA	NA	NA	NA
		1	Valve, plug assembly, SFY	NA	770829	772447	772927	772051	772106
2A		1	OY Valve, plug assembly, BUNA	NA	770592	771812	770031	773117	773167
		1	OY Valve, plug assembly, EPDM	NA	NA	770129	NA	NA	NA
		1	OY Valve, plug assembly, SFY	NA	NA	770153	770926	770054	NA
3	□♦	1	Body, gasket, BUNA	299317	298454	298455	298456	298360	299320
	□♦	1	Body, gasket, EPDM	NA	290048	290036	290018	290037	290315
	□♦	1	Body, gasket, SFY	290015	290040	290049	290053	9634049347	290225
4		1	Body, clamp	NA	212206	212207	755345	755114	270085
5	□	1	O-ring, valve plug stem, BUNA	755351	755351	755351	755357	755357	755357
	□	1	O-ring, valve plug stem, EPDM	750036	750036	750036	750037	750037	750037
	□	1	O-ring, valve plug stem, SFY	750172	750172	750172	750173	750173	750173
5A	♦	1	OY O-ring, valve plug assembly, BUNA	755388	755388	755388	755542	755542	755542
	♦	1	OY O-ring, valve plug assembly, EPDM	750004	750004	750004	750728	750728	750728
	♦	1	OY O-ring, valve plug assembly, SFY	750084	750084	750084	751715	751715	751715
6		1	Valve, bonnet	NA	NA	NA	NA	NA	NA
7		1	Actuator clamp	212196	212196	212196	212196	212196	212196
8		1	Stainless steel washer	754781	754781	754781	754776	754776	754776
9	□♦	1	O-ring, valve bonnet, BUNA	755357	755357	755357	755370	755370	755370
	□♦	1	O-ring, valve bonnet, EPDM	755037	755037	755037	750132	750132	750132
	□♦	1	O-ring, valve bonnet, SFY	750173	750173	750173	750077	750077	750077
10		1	Actuator-Type 10	NA	751170	751185	751186	751187	On Application
		1	Actuator-Type 20	751196	751168	751189	NA	NA	NA
		1	Actuator-Type 30	NA	759348	751274	NA	751130	751191
11		1	Yoke OY	NA	NA	NA	NA	NA	NA

Parts marked with □♦ are included in the service kits.

		1”	1 1/2”	2”	2 1/2”	3”	4”
□	161 Service Kit BUNA	9613990232	9613990235	9613990238	9613990241	9613990244	9613990247
□	161 Service Kit EPDM	9613990233	9613990236	9613990239	9613990242	9613990245	9613990248
□	161 Service Kit SFY	9613990234	9613990237	9613990240	9613990243	9613990246	9613990249
♦	161OY Service Kit BUNA	9613990214	9613990217	9613990220	9613990223	9613990226	9613990229
♦	161OY Service Kit EPDM	9613990215	9613990218	9613990221	9613990224	9613990227	9613990230
♦	161OY Service Kit SFY	9613990216	9613990219	9613990222	9613990225	9613990228	9613990231

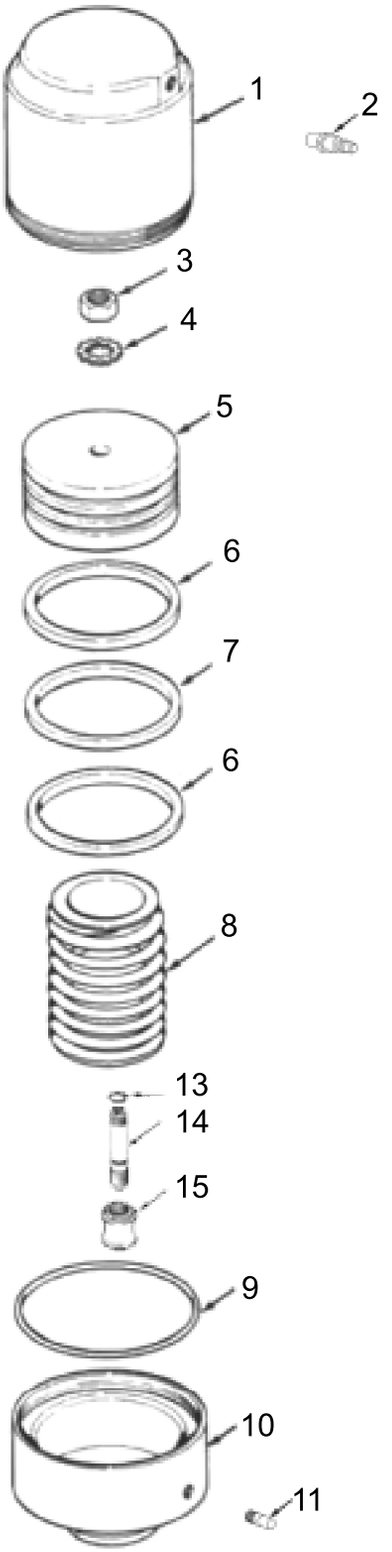
1
2
3
4
5
6
7
6
8
13
14
15
9
10
11

Pos		Qty	Denomination	Shut Off 1", 1 1/2", 2"	Shut Off 2 1/2", 3"	Divert 1½", 2"	Shut Off / Divert 4" / 2½"	Divert 3", 4"
16		1	Actuator Type 10	751170	751184	751185	751186	751187
		1	Actuator Type 20	751168	751188	751189	751190	751131
1		1	Actuator body cylinder	750846	750896	750983	750984	750985
2		1	Air coupler adapter	764098	764098	764098	764098	764098
3		1	Nut	189923	189923	189923	189923	189923
4		1	Lockwasher	189971	189971	189971	189971	189971
5		1	Spring assembly	750832	750833	750834	750835	750836
6	□	2	Vee block packing	755460	755460	755460	755460	755460
7	□		Felt seal	755464	755464	755464	755464	755464
8		1	Piston	767870	767870	767870	767870	767870
9	□	1	O-ring	296608	296608	296608	296608	296608
10		1	Bonnet	753824	753824	753824	753824	753824
11		1	Vented plug	181256	181256	181256	181256	181256
12	□	1	O-ring	755353	755353	755353	755353	755353
13	□	1	O-ring	755388	755388	755388	755388	755388
14		1	Coupler stud	778186	778186	778186	778186	778186
15		1	Coupler	764241	764241	764241	764241	764241

Parts marked with □ are included in the service kits.

Service kit	9613990040

Not manufactured anymore

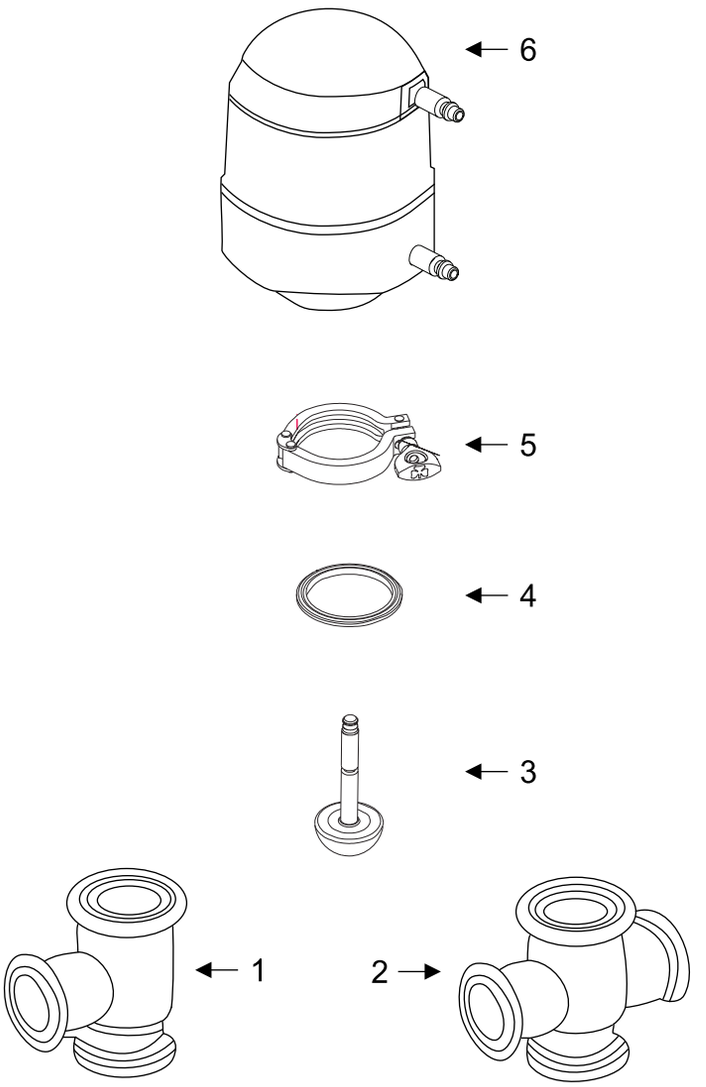

Pos	Qty	Denomination	1 1/2”	2”	2 1/2”	3”
1	1	Valve body: Tee #10	NA	NA	NA	NA
2	1	Valve body: Cross #30	NA	NA	NA	NA
3	1	Valve plug BUNA	770074	776630	772039	770797
	1	Valve plug EPDM	NA	771660	771219	772366
	1	Valve plug SFY	772247	772020	772149	772053
	1	Valve plug: TR	770624	770627	770628	770634
	1	TR Seat	751525	750943	750947	751268
4	1	Body O-ring BUNA	755469	755470	755471	755472
	1	Body O-ring EPDM	750134	750214	750304	750215
	1	Body O-ring SFY	751544	751545	751546	751547
5	1	Body clamp	755035	755036	755037	755038
6	1	Actuator	NA	NA	NA	NA

Not manufactured anymore

Pos		Qty	Denomination	1 1/2”	2”	1 1/2”	3”
3		1	Vented plug	181256	181256	181256	181256
4		1	Nut	189923	189923	189923	189923
5		1	Lockwasher	189971	189971	189971	189971
6		1	Spring assembly-shut off	3103763	3103763	750832	750833
7		1	Spring assembly-divert	3103763	3103763	750833	759550
8	□	2	Vee block packing	755460	755460	755460	755460
9	□	1	Felt seal	755464	755464	755464	755464
10		1	Piston	767870	767870	767870	767870
11	□	1	O-ring	296608	296608	296608	296608
14		1	Air coupler adaptor	764098	764098	764098	764098
15	□	2	O-ring	755357	755357	755370	755370
16	□	1	O-ring	755388	755388	755388	755388
17		1	Coupler stud	778186	778186	778186	778186
18		1	Coupler	764241	764241	764241	764241

		1 1/2”	2”	1 1/2”	3”
□	Service Kit	9613990038	9613990038	9613990039	9613990039

Parts marked with □ are included in the service kits.

Not manufactured anymore

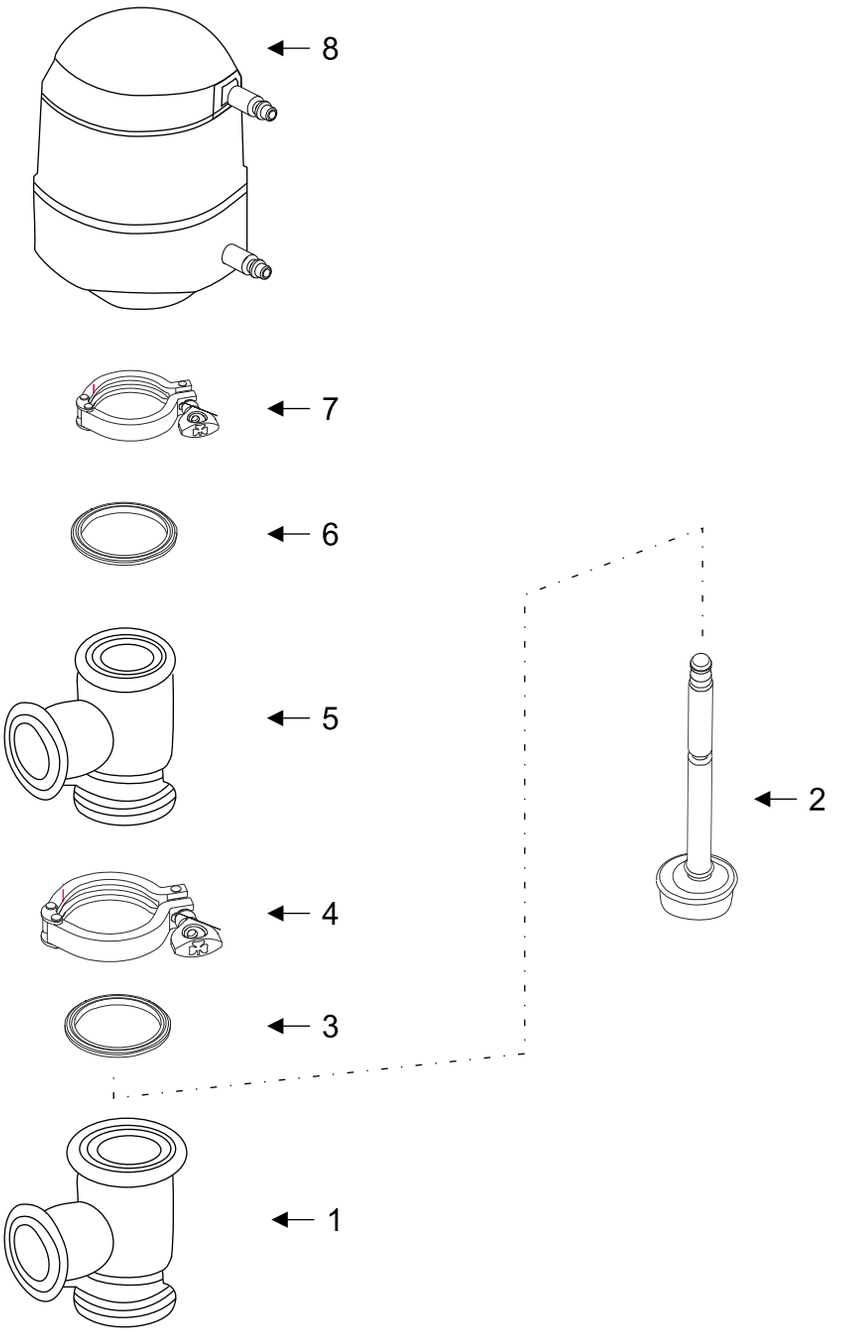

Pos	Qty	Denomination	1 1/2”	2”	2 1/2”	3”
1	1	Valve body:Lower	NA	NA	NA	NA
2	1	Valve plug BUNA	776884	776685	772040	770819
	1	Valve plug EPDM	NA	772046	772001	772155
	1	Valve plug SFY	772957	772115	772148	772107
	1	Valve plug:TR	770657	770660	770671	770678
	1	TR Seats	751525	750943	750947	751268
3	1	Body O-ring BUNA	755469	755470	755471	755472
	1	Body O-ring EPDM	750134	750214	750304	750215
	1	Body O-ring SFY	751544	751545	751546	751547
4	1	Body clamp	755035	755036	755037	755038
5	1	Valve body: Upper	NA	NA	NA	NA
6	1	O-ring BUNA	755474	750216	755470	755471
7	1	Body clamp	755035	755036	755037	755038
8	1	Actuator	NA	NA	NA	NA

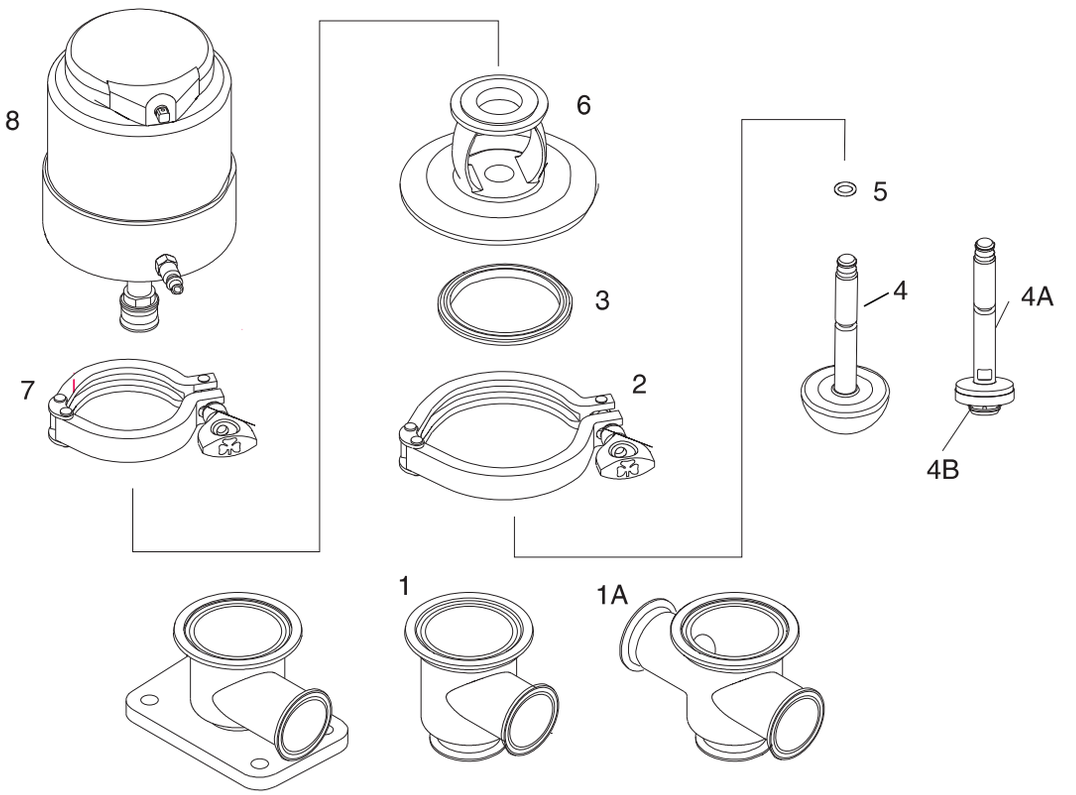

1 (262-13 Only)

Pos		Qty	Denomination	2”	2 1/2”	3”
1		1	Valve body:, 262-47	NA	NA	NA
		1	Valve body:, 262-48	NA	NA	NA
		1	Valve body:, 262-49	NA	NA	NA
		1	Valve body:, 262-50	NA	NA	NA
		1	Valve body:, 262-13	NA	NA	NA
		1	Valve body:, 262-123	NA	NA	NA
1A		1	Valve body:, 262-51	NA	NA	NA
		1	Valve body:, 262-52	NA	NA	NA
2		1	Body clamp	270266	270267	212211
3	□♦	1	Body gasket, BUNA	755417	755419	755420
	□♦	1	Body gasket, EPDM	751799	750812	750322
	□♦	1	Body gasket, SFY	750209	750210	750610
4		1	Valve plug:, 262-47 & 52 BUNA	771249	771680	771682
		1	Valve plug:, 262-47 & 52 EPDM	771264	N/A	772089
		1	Valve plug:, 262-47 & 52 SFY	771981	772291	770177
		1	Valve plug:, plug:262-13 & 123 BUNA	776530	776553	776652
		1	Valve plug:, plug:262-13 & 123 EPDM	770720	770730	771880
		1	Valve plug:, plug:262-13 & 123 SFY	770274	771925	771708
4A		1	TR valve plug	778356	778358	770721
4B	♦	1	TR snap on seat	750943	750947	751268
5	□♦	1	O-ring stem, BUNA	755351	755357	755357
	□♦	1	O-ring stem, EPDM	750036	750037	750037
	□♦	1	O-ring stem, SFY	750172	750173	750173
6		1	Valve bonnet	754040	754054	754038
7		1	Actuator clamp	212196	212196	212196
8		1	Actuator type 220	750785	750785	750785

Parts marked with □♦ are included in the service kits.

		2”	2 1/2”	3”
included in non TR Service Kits				
□	Buna	9613990267	9613990270	9613990273
□	EPDM	9613990268	9613990271	9613990274
□	SFY	9613990269	9613990272	9613990275
included in TR Service Kits				
♦	Buna	9613990288	9613990291	9613990294
♦	EPDM	9613990289	9613990292	9613990295
♦	SFY	9613990290	9613990293	9613990296

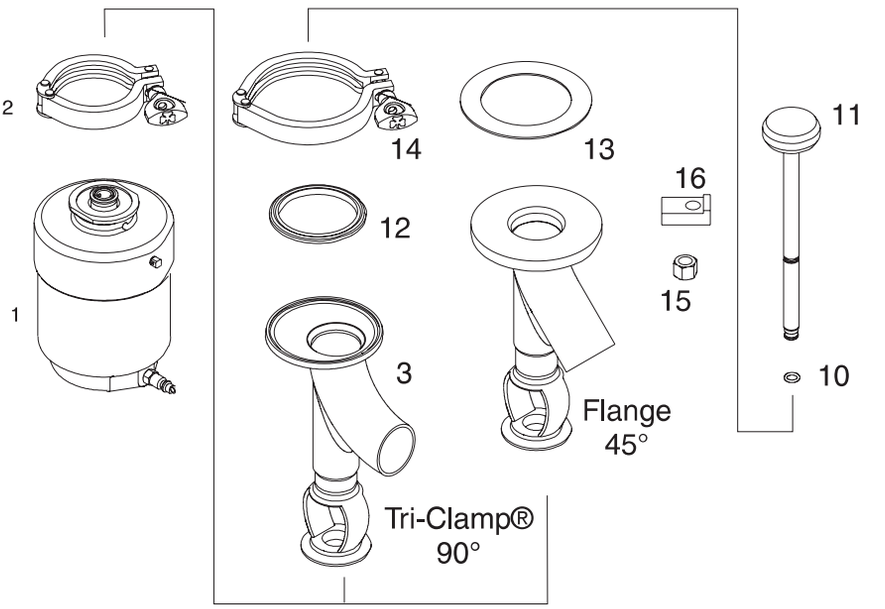

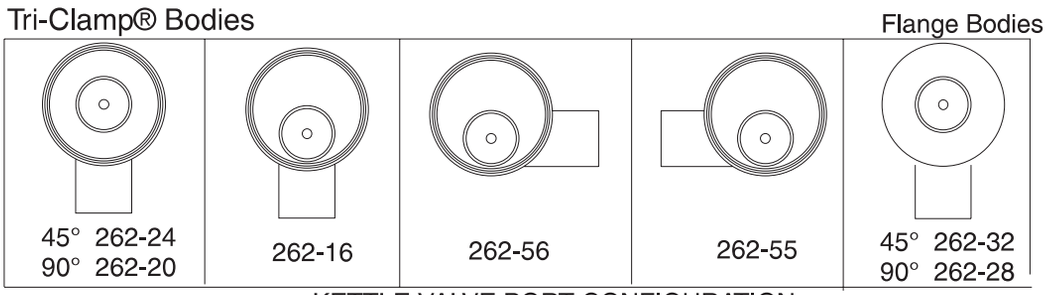

KETTLE VALVE PORT CONFIGURATION
Bottom View - Looking into valve body through mounting end.

Pos		Qty	Denomination	2”	2 1/2”	3”	4”
1		1	Actuator	750799	750799	750799	750799
2		1	Actuator clamp	212196	212196	212196	212196
3		1	Valve body:, 262-16	NA	NA	NA	NA
4		1	Valve body:, 262-20a	NA	NA	NA	NA
5		1	Valve body:, 262-24a	NA	NA	NA	NA
6		1	Valve body:, 262-28a	NA	NA	NA	NA
7		1	Valve body:, 262-32	NA	NA	NA	NA
8		1	Valve body:, 262-55a	NA	NA	NA	NA
9		1	Valve body:, 262-56a	NA	NA	NA	NA
10	□♦	1	O-ring stem, BUNA	755351	755357	755357	755370
	□♦	1	O-ring stem, EPDM	750036	750037	750037	750132
	□♦	1	O-ring stem, SFY	750172	750173	750173	750077
11		1	Valve plug , BUNA	770133	770334	770451	770458
		1	Valve plug , EPDM	771859	770085	772679	9634050278
		1	Valve plug , SFY	770033	772331	771801	770206
		1	Valve plug, Threaded coupler end BUNA	NA	NA	NA	770197
		1	Valve plug, Threaded coupler end EPDM	NA	NA	NA	770729
11A		1	Coupler nut	NA	NA	NA	180440
12	□	1	Body gasket, BUNA	755418	755418	755421	755421
	□	1	Body gasket, EPDM	750811	750811	750686	750686
	□	1	Body gasket, SFY	750609	750609	750738	750738
13	□♦	1	Body gasket, BUNA for 262-28 & 32	755423	755423	755423	755423
	□♦	1	Body gasket, EPDM for 262-28 & 32	750949	750949	750949	9634051854
	□♦	1	Body gasket, SFY for 262-28 & 32	750123	750123	750123	751443
14		1	Body clamp for 262-16,20,24,55,56	212208	212208	212209	212209
15		4	Nut for 262-28 & 32	754288	754288	754288	754288
16		4	Clamp for 262-28 & 32	755057	755057	755057	755057

Parts marked with □♦ are included in the service kits.

		2”	2 1/2”	3”	4”
included in Service Kits					
□	Buna	9613990276	9613990279	9613990282	9613990285
□	EPDM	9613990277	9613990280	9613990283	9613990286
□	SFY	9613990278	9613990281	9613990284	9613990287
included in Service Kits for 262-28 & 32					
♦	Buna	9613990255	9613990258	9613990261	9613990264
♦	EPDM	9613990256	9613990259	9613990262	9613990265
♦	SFY	9613990257	9613990260	9613990263	9613990266

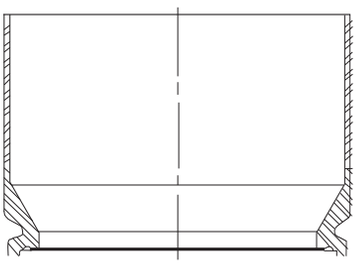

262-31 and 262-35

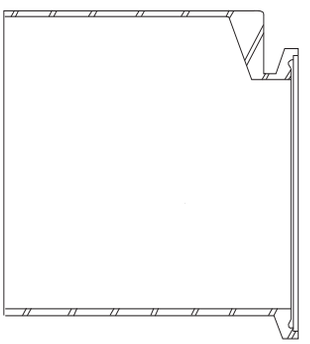

262-57, 262-58, 262-22

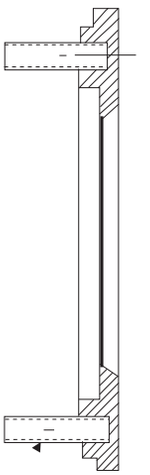

262-29 and 262-33

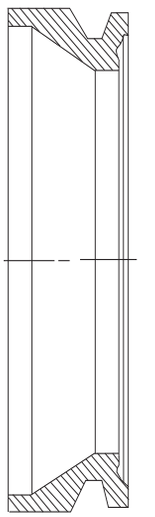

262-21

Tank ferrules for 262-21, 22, 29, 31, 33, 35, 57, 58

Pos	Qty	Denomination	2”	2 1/2’	3”	4”
	1	Ferrule, 262-21	761580	761580	760938	760938
	1	Ferrule, 262-22	762284	762284	760948	760948
	1	Ferrule, 262-29	760766	760766	760766	760837
	1	Ferrule, 262-31	760928	760928	760345	760345
	1	Ferrule, 262-33	760766	760766	760766	760837
	1	Ferrule, 262-35	760928	760928	760345	760345
	1	Ferrule, 262-57	762284	762284	760948	760948
	1	Ferrule, 262-58	762284	762284	760948	760948

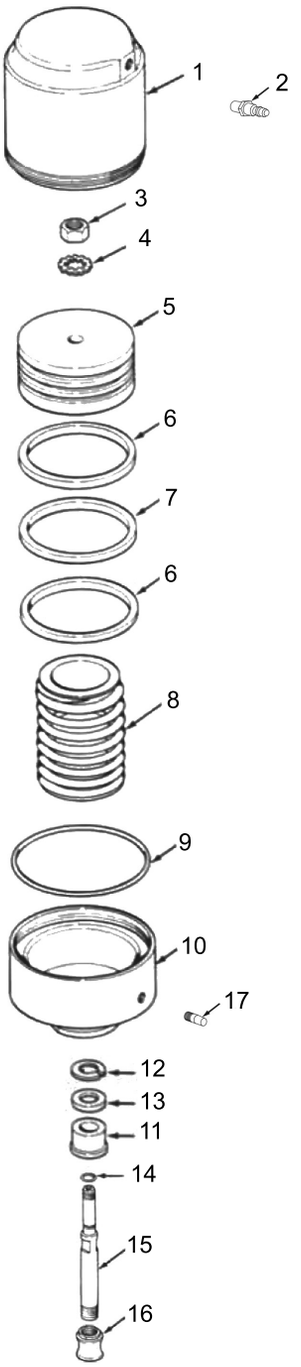
1
2
3
4
5
6
7
6
8
9
10
17
12
13
11
14
15
16

Pos		Qty	Denomination	
1		1	Cylinder	750846
2		1	Air coupler adapter	764098
3		1	Nut	189923
4	□	1	Lockwasher	189971
5		1	Piston	767870
6	□	2	Vee block packing	755460
7	□	1	Felt seal	755464
8		1	Spring assembly	750832
9	□	1	O-ring	296608
10		1	Bonnet	753826
11		1	Bushing	764754
12	□	1	Retainer ring	755090
13	□	1	V Packing	755461
14	□	1	O-ring	755388
15		1	Stem	750605
16		1	Coupler	764241
17		1	Vented plug	181256

Parts marked with □ are included in the service kits.

□	**Service kit**	**9613990037**

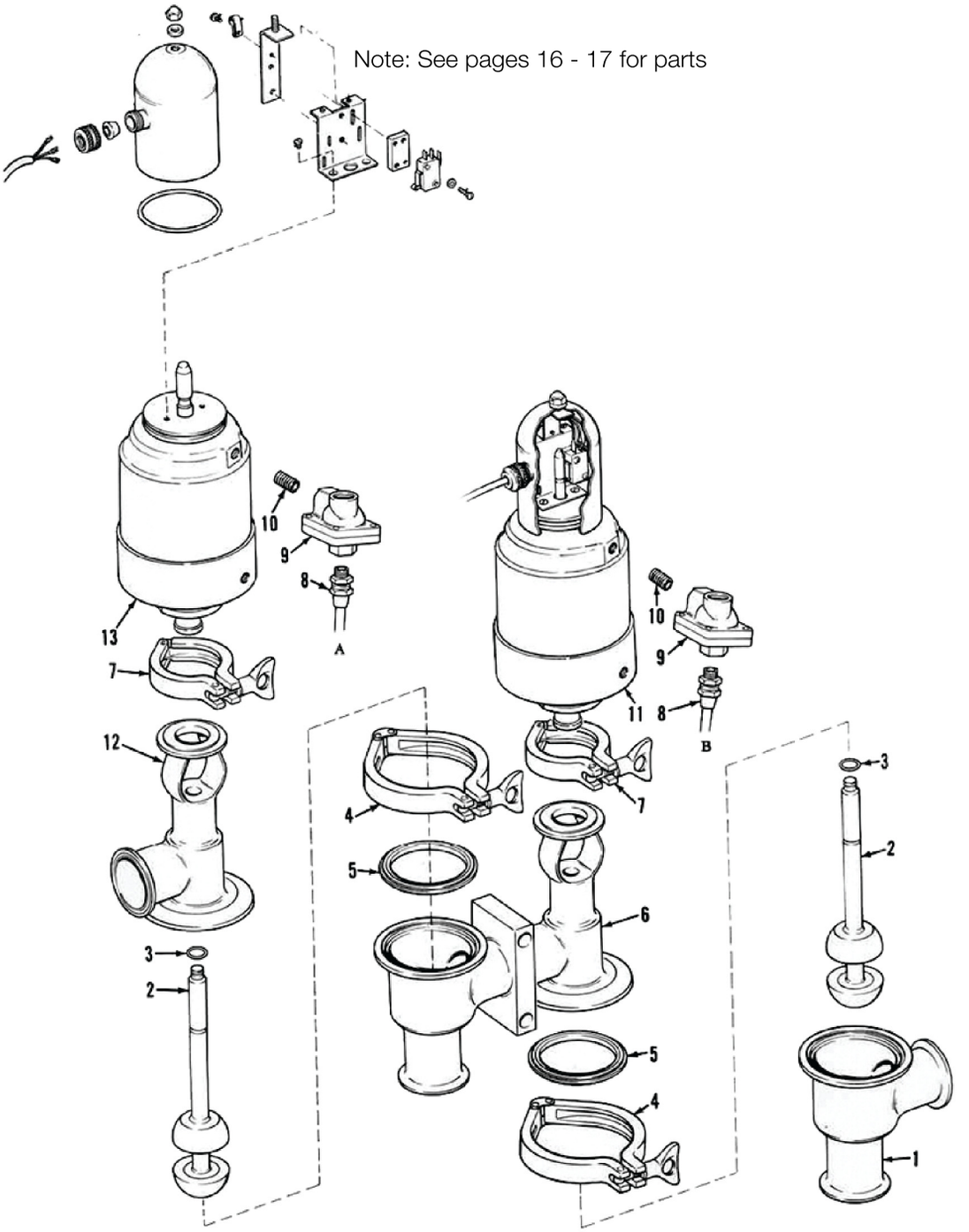
Note: See pages 16 - 17 for parts
10
9
8
A
13
7
12
3
2
10
9
8
B
11
7
4
5
6
5
4
3
2
1

Pos		Qty	Denomination	1½"	2”	2 1/2”	3”	3H
1		1	Lower body-divert Valve	NA	NA	NA	NA	NA
2		2	Valve plug, EPDM	771372	770607	771912	770639	770639
		2	Valve plug, SFY	772035	771755	771311	771815	771815
		2	Valve plug, TR	770602	770597	770600	770625	770625
3	□	2	O-ring, BUNA	755351	755351	755357	755357	755357
	□	2	O-ring, EPDM	750036	750036	750037	750037	750037
	□	2	O-ring, SFY	750172	750172	750173	750173	750173
4		2	Clamp-body	212198	270266	270267	212211	212211
5	□	2	Gasket-body, BUNA	755416	755417	755419	755420	755420
	□	2	Gasket-body, EPDM	750062	751799	750812	750322	750322
	□	2	Gasket-body, SFY	750497	750209	750210	750210	750210
6		1	Body assembly-valve	NA	NA	NA	NA	NA
7		2	Clamp-actuator	212196	212196	212196	212196	212196
8		2	Connector-hose	764027	764027	764027	764027	764027
9		2	Quick exhaust valve	762365	762365	762365	762365	762365
10		2	Nipple-pipe	360583	360583	360583	360583	360583
11		2	Actuator-complete	751053	751053	750794	751054	751055
12		1	Upper body	NA	NA	NA	NA	NA
13		1	Actuator-complete	751053	751053	750794	751054	751055
35		1	Air filter	NA	NA	NA	NA	NA
36		1	Control panel, 115V	NA	NA	NA	NA	NA
		1	Control panel, 220V	NA	NA	NA	NA	NA
37		2	Hose (10’ long)	NA	NA	NA	NA	NA
38		2	Connector	NA	NA	NA	NA	NA

Parts marked with □ are included in the service kits.

		1 1/2”	2”	2 1/2”	3”
□	BUNA	9613990172	9613990175	9613990179	9613990181
□	EPDM	9613990173	9613990176	9613990179	9613990182
□	SFY	9613990174	9613990177	9613990180	9613990183

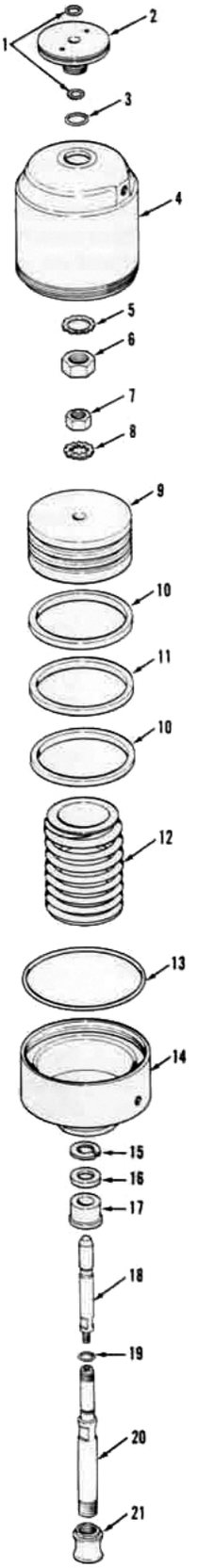
1
2
3
4
5
6
7
8
9
10
11
10
12
13
14
15
16
17
18
19
20
21

Pos		Qty	Denomination	2”	2 1/2”	3”	3H
1	□	2	O ring-base plate to stem	755388	755388	755388	755388
2		1	Base plate	759592	759592	759592	759592
3	□	1	O ring-base plate to housing	755531	755531	755531	755531
4		1	Cylinder-actuator body	750830	750830	750830	750830
5		1	Lock washer-base plate nut	754869	754869	754869	754869
6		1	Nut-base plate	754338	754338	754338	754338
7		1	Nut-actuator stem	189923	189923	189923	189923
8		1	Lock washer stem	189971	189971	189971	189971
9		1	Piston	767870	759405	759405	759405
10	□	2	Packing	755460	755460	755460	755460
11	□	1	Felt seal	755464	755464	755464	755464
12		1	Spring Assembly	750826	750797	750796	750796
		1	Spring assembly (small 3H only)				750803
13	□	1	O ring-bonnet to cylinder	296608	296608	296608	296608
14		1	Bonnet actuator	753796	753796	753796	759407
15	□	1	Ring-retaining	755090	755090	755090	755090
16	□	1	Packing-vee block	755461	755461	755461	755461
17		1	Bushing-stem	764754	764754	764754	764754
18		1	Stem-indicating	750327	750327	750327	750327
19	□	1	O ring-stem	755388	755388	755388	755388
20		1	Stem-actuator	750324	750324	750324	750324
21		1	Coupler	764241	764241	764241	764241
22		1	Plug-vented	181256	181256	181256	181256

Parts marked with □ are included in the service kits.

□	**Service kit**	**9613990171**

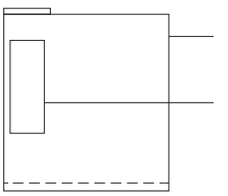

Rear view of switch mouinting bracket.
Position switch adjusting plate as shown.

Note: Jumper wire to be soldered on back of slip-on connector of black lead wire.

Note: (20 and 21) Position Cable entrance and knurled nut facing switch adjusting screws as shown

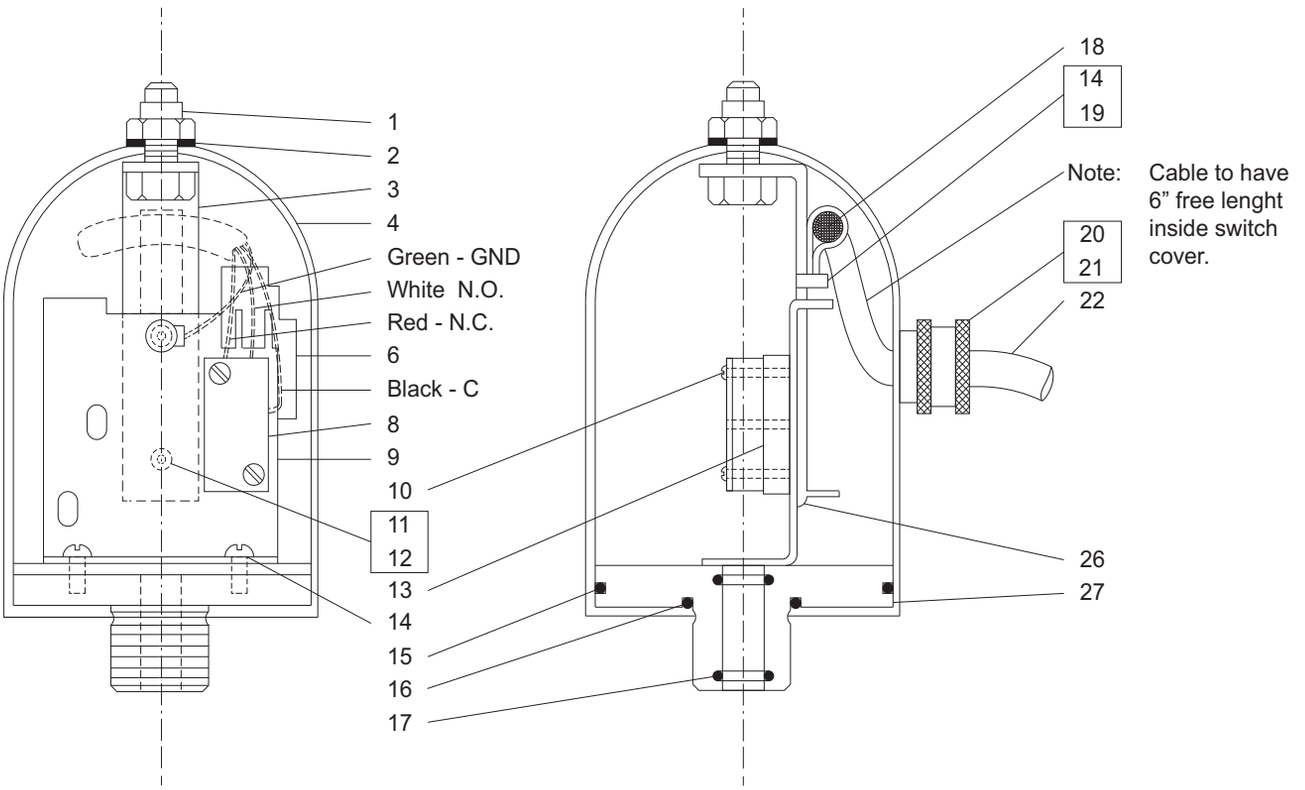

Note: Cable to have 6” free lenght inside switch cover.

Pos	Qty	Denomination	Part No.	Item No.
1	1	Elastic Stop Nut	NU1500E02-SS	180134
2	1	Nylon Lockwasher	15-87-3/8	755000
3	1	Cover Hold Down Bracket	10-336-S	751587
4	1	Switch Cover	23-124-1-S	750680
6	1	Socket	EL-19760-0011	760450
8	1	Micro Switch	EL-79500-0013	768263
9	1	Switch Mounting Bracket	10-155	753405
10	2	#4-40 x 1" Lg. Rd. Hd. M. Screw	SC110R-SS	189492
11	2	#10-32 x 1/4 Lg. Rd. Hd. M. Screw	SC1003R-SS	189617
12	2	#10 Lockwasher	LWA900-SS	180086
13	1	Switch Mtg. Block	24-30	758780
14	3	6-32 x 3/8 Lg. Truss Hd. S.S.	SC505Y-SS	180337
15	1	O Ring	17-156-USF	755530
16	1	O Ring	17-157-U	755531
17	2	O Ring	17-35-USF	755388
18	1	Cable Clamp	16-115	755138
19	2	Washer	15-110	754860
20	1	Knurled Nut	EL-40165-0011	768022
21	1	Rubber Grommet	EL-40165-0004	768023
22	1	Cable Assembly	EL-97510-0003	763801
26	1	Switch Adj. Plate	10-156-S	753406
27	1	Switch As'bly Base	26-42	759592

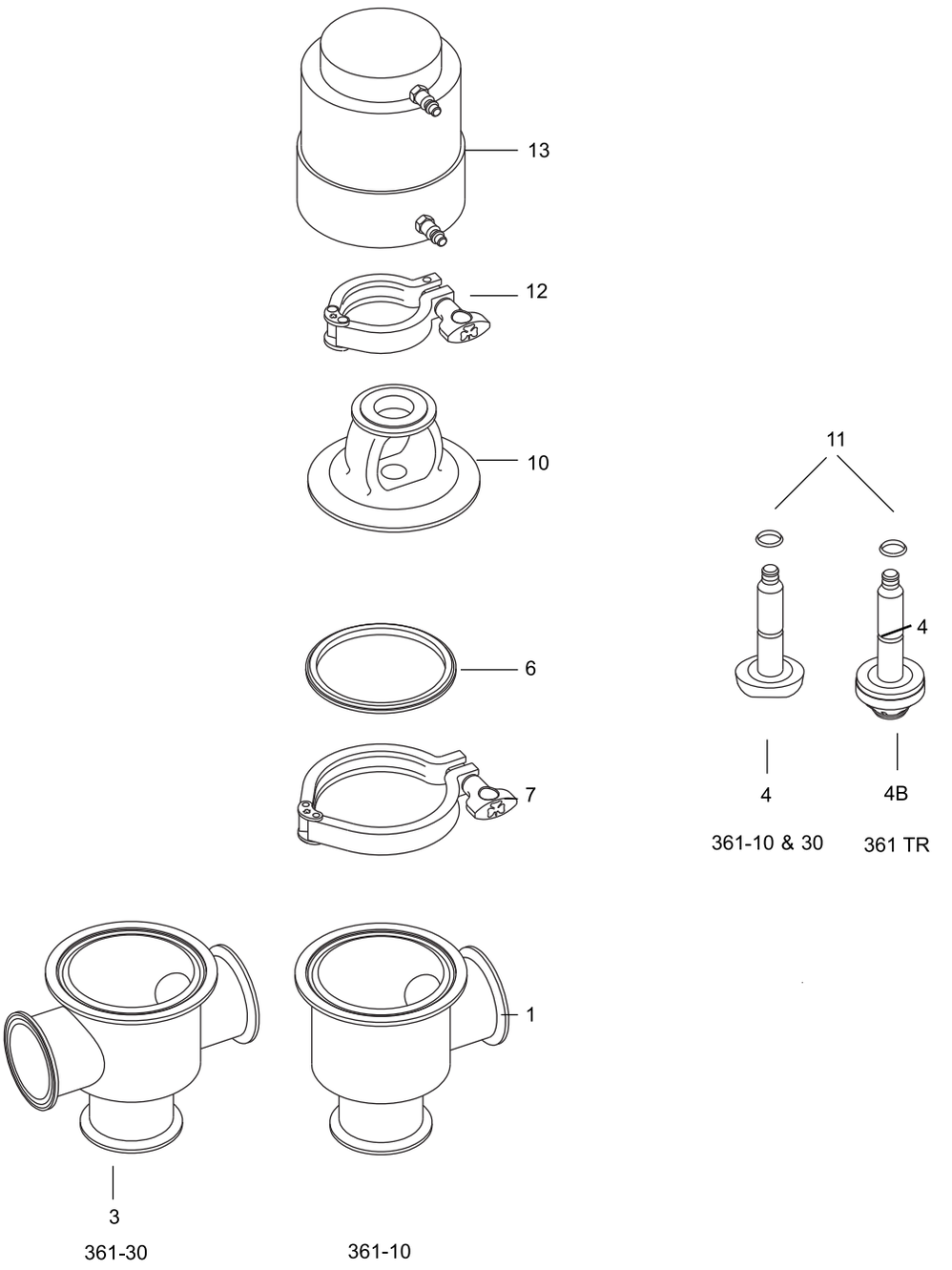
13
12
10
6
7
11
4
4
4B
361-10 & 30
361 TR
1
3
361-30
361-10

Pos		Qty	Denomination	1”	1 1/2”	2”	2 1/2”	3”
1		1	Lower body, 2 ports clamp	NA	NA	NA	NA	NA
		1	Lower body, 2 ports weld	NA	NA	NA	NA	NA
3		1	Lower body , 3 ports clamp	NA	NA	NA	NA	NA
		1	Lower body , 3 ports weld	NA	NA	NA	NA	NA
4		1	Valve plug, BUNA	770424				
		1	Valve plug, EPDM	772101				
		1	Valve plug, SFY	770681				
		1	Valve plug, LP BUNA	NA	9634055813	9634050680	9634055815	9634055816
		1	Valve plug, LP EPDM	NA	773173	9634050984	773177	773118
		1	Valve plug, LP SFY	NA	773176	9634050729	773178	773119
		1	Valve plug, TR	772991	772992	771101	772994	772995
4B	♦	1	TR stem seat	751524	751525	750943	750947	751268
6	□♦	1	Body gasket, BUNA	755415	755416	755417	755419	755420
	□♦	1	Body gasket, EPDM	750157	750062	751799	750812	750322
	□♦	1	Body gasket, SFY	750667	750497	750209	750210	750610
7		1	Body clamp	212205	212198	270266	270267	212211
10		1	Bonnet	750589	754233	754040	754054	754038
11	□♦	1	O-ring stem, BUNA	755351	755351	755351	755357	755357
	□♦	1	O-ring stem, EPDM	750036	750036	750036	750037	750037
	□♦	1	O-ring stem, SFY	750172	750172	750172	750173	750173
12		1	Actuator clamp	212196	212196	212196	212196	212196
13		1	Actuator, type 10 N/O	751228	750782	750782	750782	750782
		1	Actuator, type 20 N/C	751058	750785	750785	750785	750785

Parts marked with □♦ are included in the service kits.

		1’	1 1/2”	2’	2 1/2’	3’
NON TR Service Kits						
♦	BUNA	9613990073	9613990076	9613990079	9613990082	9613990085
♦	EPDM	9613990074	9613990077	9613990080	9613990083	9613990086
♦	SFY	9613990075	9613990078	9613990081	9613990084	9613990087
TR Service Kits						
□	BUNA	9613990043	9613990046	9613990049	9613990052	9613990055
□	EPDM	9613990044	9613990047	9613990050	9613990053	9613990056
□	SFY	9613990045	9613990046	9613990051	9613990054	9613990057

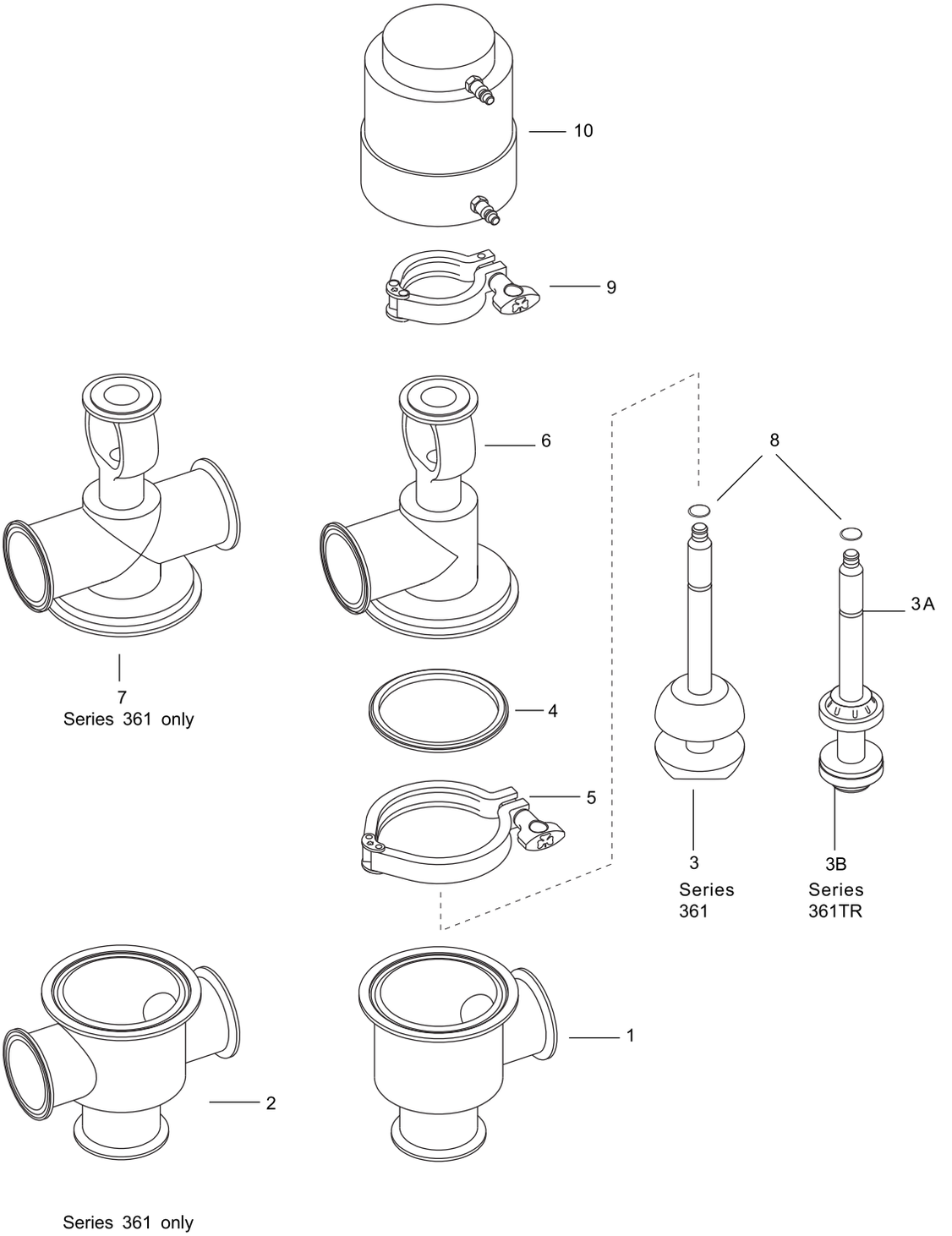
10
9
6
8
7
Series 361 only
4
3A
5
3
Series 361
3B
Series 361TR
1
2
Series 361 only

Pos		Qty	Denomination	1”	1 1/2”	2”	2 1/2”	3”
1		1	Lower tee body	NA	NA	NA	NA	NA
2		1	Lower cross body	NA	NA	NA	NA	NA
3		1	Valve stem, BUNA	770171				
		1	Valve stem, EPDM	770839				
		1	Valve stem, SFY	771231				
		1	Valve stem , LP BUNA	NA	9634055817	9634055818	963455819	9634055820
		1	Valve stem , LP EPDM	NA	773179	773181	73123	773183
		1	Valve stem , LP SFY	NA	773180	773182	773131	773184
		1	Valve stem , TR	770374	770704	770538	770548	770553
3A	□	1	TR stem seat	751525	751525	750943	750947	751268
3B	□	1	TR stem seat	752524	751525	750943	750947	751268
4	□♦		Body gasket , BUNA	755415	755416	755417	755419	755420
	□♦	1	Body gasket , EPDM	750157	750062	751799	750812	750322
	□♦	1	Body gasket , SFY	750667	750497	750209	750210	750610
5		1	Body clamp	212205	212198	270266	270267	212211
6		1	Upper body 21 & 23	NA	NA	NA	NA	NA
7		1	Upper body 41 & 43	NA	NA	NA	NA	NA
8	□♦	1	O-ring stem, BUNA	755351	755351	755351	755357	755357
	□♦	1	O-ring stem, EPDM	750036	750036	750036	750037	750037
	□♦	1	O-ring stem, SFY	750172	750172	750172	750173	750173
9		1	Actuator clamp	212196	212196	212196	212196	212196
10		1	Actuator , type 10 N/O	750782	750782	750782	750782	750782
		1	Actuator, type 20 N/C	750785	750785	750785	750785	750785

Parts marked with □♦ are included in the service kits.

		1”	1 1/2”	2”	2 1/2”	3”
□	BUNA	9613990073	9613990076	9613990079	9613990082	9613990085
□	EPDM	9613990074	9613990077	9613990080	9613990083	9613990086
□	SFY	9613990075	9613990078	9613990081	9613990084	9613990087
♦	BUNA	9613990058	9613990061	9613990064	9613990067	9613990070
♦	EPDM	9613990059	9613990062	9613990065	9613990068	9613990071
♦	SFY	9613990060	9613990063	9613990066	9613990069	9613990072

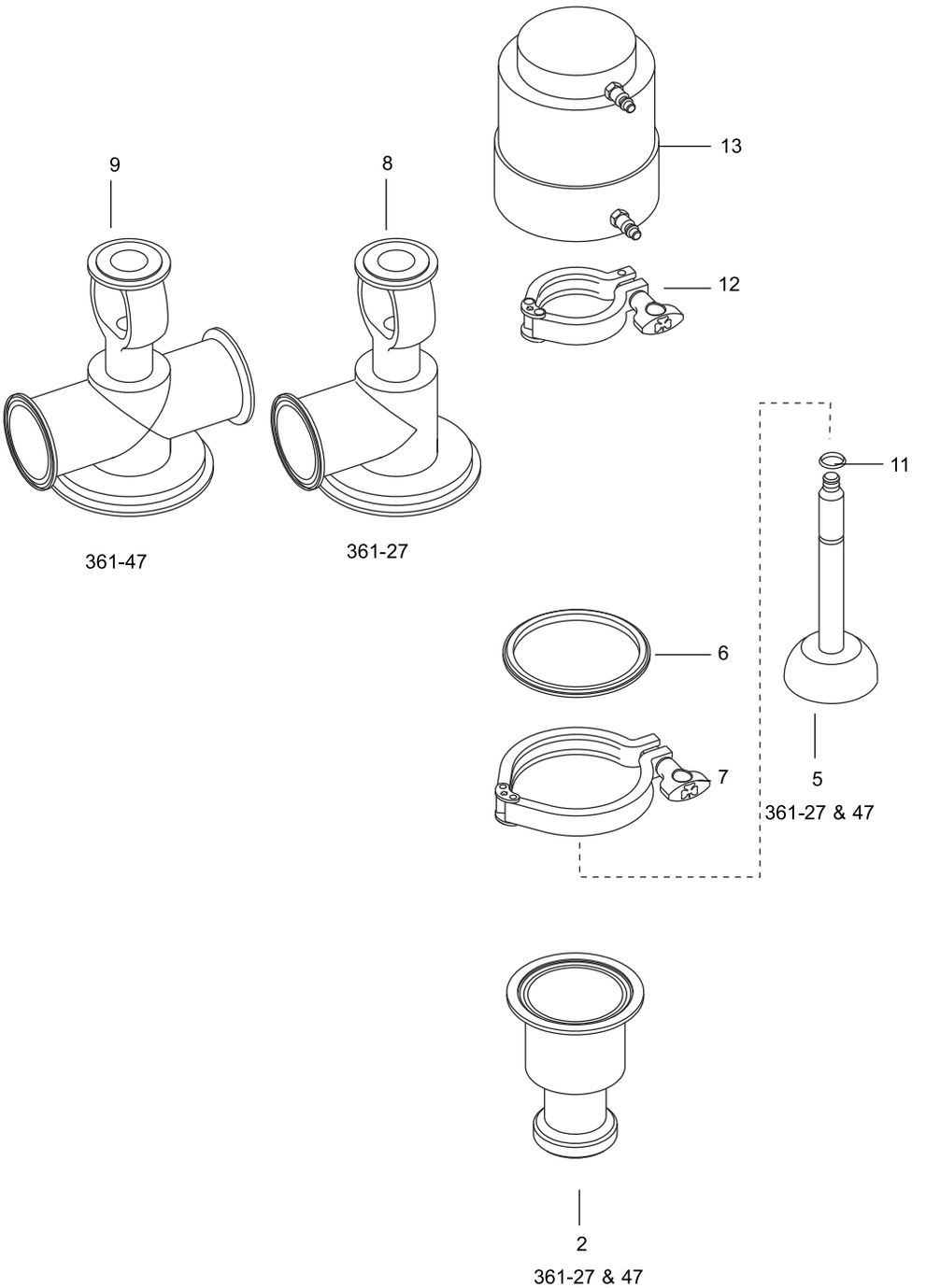
9
8
13
12
11
6
7
5
361-27 & 47
2
361-27 & 47
361-47
361-27

Pos		Qty	Denomination	1”	1 1/2”	2”	2 1/2”	3”
2		1	Lower body 27	NA	NA	NA	NA	
5		2	Valve plug, BUNA	NA	770288			
		1	Valve plug, EPDM	NA	771791			
		1	Valve plug, SFY	NA	772108			
		1	LP Valve Plug, BUNA	NA	NA	9634055821	9634055822	9634055823
		1	LP Valve Plug, EPDM	NA	NA	773250	773253	773256
		1	LP Valve Plug, SFY	NA	NA	773251	773254	773257
6	□	1	Body gasket , BUNA	755415	755416	755417	755419	755420
	□	1	Body gasket , EPDM	750157	750062	751799	750812	750322
	□	1	Body gasket , SFY	750667	750497	750209	750210	750610
7		1	Body clamp	212205	212198	270266	270267	212211
8		1	Upper body 27	NA	NA	NA	NA	NA
9		1	Upper body 47	NA	NA	NA	NA	NA
11	□	1	O-ring stem, BUNA	755351	755351	755351	755357	755357
	□	1	O-ring stem, EPDM	750036	750036	750036	750037	750037
	□	1	O-ring stem, SFY	750172	750172	750172	750173	750173
12		1	Actuator clamp	212196	212196	212196	212196	212196
13		1	Actuator type, 10 N/O	750782	750782	750782	750782	750782
		1	Actuator type, 20 N/C	750785	750785	750785	750785	750785

Parts marked with □ are included in the service kits.

		1”	1 1/2”	2”	2 1/2”	3”
Service Kit						
□	BUNA	9613990073	9613990076	9613990079	9613990082	9613990085
□	EPDM	9613990074	9613990077	9613990080	9613990083	9613990086
□	SFY	9613990075	9613990078	9613990081	9613990084	9613990087

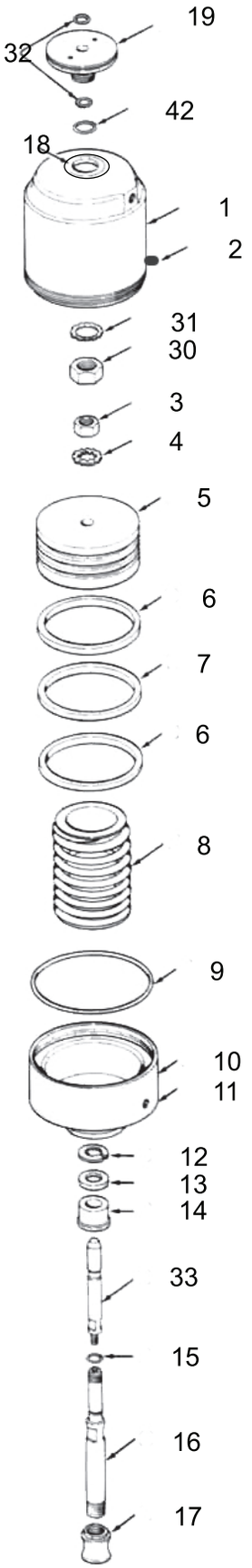
19
32
42
18
1
2
31
30
3
4
5
6
7
6
8
9
10
11
12
13
14
33
15
16
17

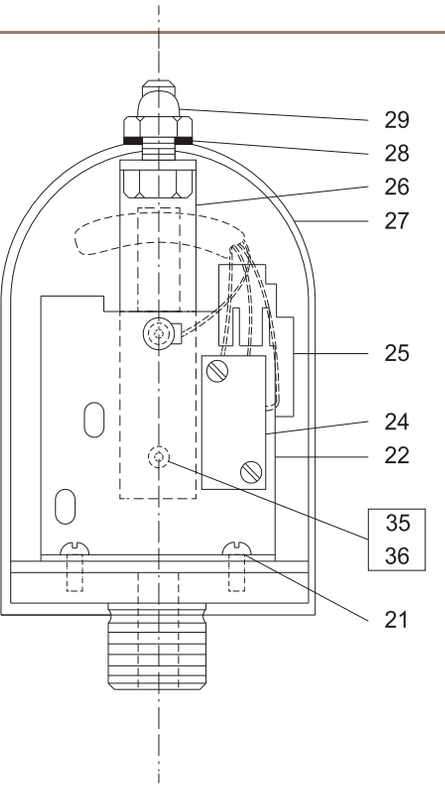
29
28
26
27
25
24
22
35
36
21

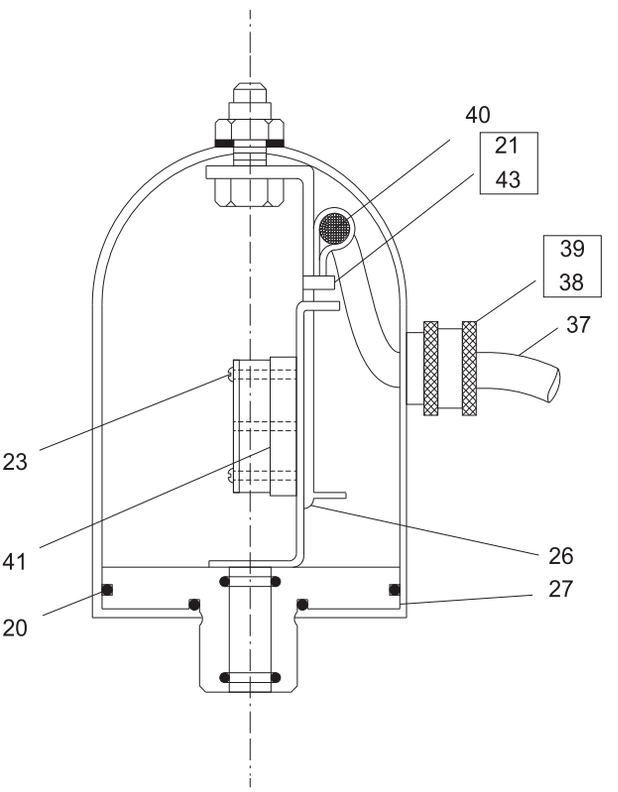
40
21
43
39
38
37
23
41
20
26
27

Pos		Qty	Denomination	
1		1	Actuator cylinder	750276
2		1	Vented plug	750276
3		1	Nut	189923
4		1	Lockwasher	189971
5		1	Piston	767870
6	□	2	Vee block packing	755460
7	□	1	Felt seal	755464
8		1	Spring assembly	750826
9	□	1	O-ring	296608
10		1	Bonnet	753796
11		1	Air coupler adaptor	764098
12		1	Retaining ring	755090
13	□	1	Vee block packing	755461
14		1	Bushing	764754
15	□	1	O-ring	755388
16		1	Actuator stem	750324
17		1	Coupler	764241
18		1	Gasket	750574
19		1	Switch assembly base	759592
20		1	O-ring	755530
21		1	Screw	180337
22		1	Switch mounting bracket	753405
23		4	Screw	189492
24	□	2	Micro switch	768263
25		2	Socket	
26		1	Cover hold down bracket	750601
27		1	Switch cover	750680
28		1	Nylon lockwasher	755000
29		1	Acorn nut	180484
30		1	Nut	754338
31		1	Lockwasher	754869
32	□	2	O-ring	755388
33		1	Indicating stem	750334
34		2	Switch adj plate	753406
35		2	Screw	189617
36		2	Lockwasher	180086
37		1	Cable assembly	763802
38		1	Rubber grommet	768023
39		1	Knurled nut	768022
40		1	Cable clamp	755138
41		2	Switch mounting block	758780
42		1	O-ring	755531
43		1	Washer	754860

Parts marked with □ are included in the service kits.

□	**Service Kit**	**9613990133**

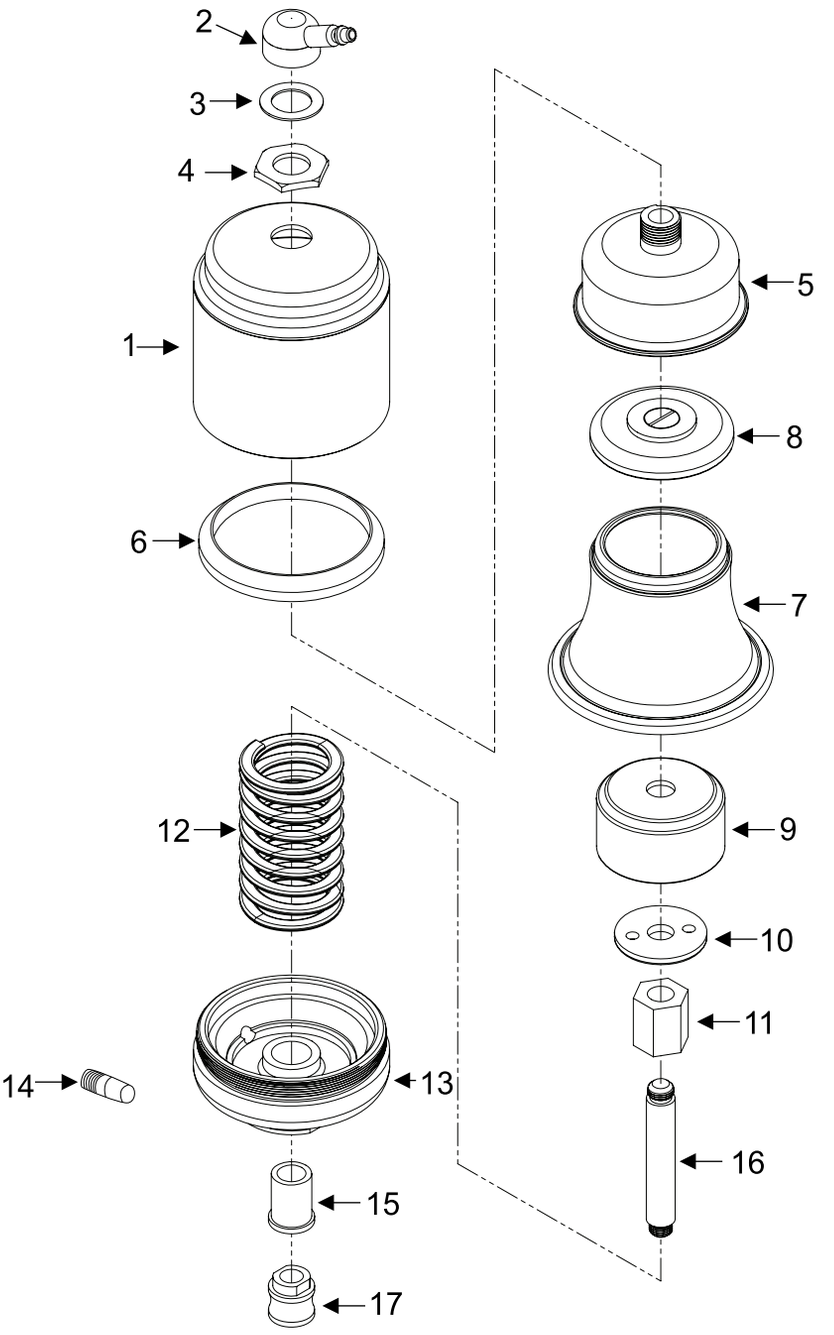
2
3
4
1
6
5
8
7
12
9
10
11
14
13
16
15
17

Pos		Qty	Denomination	
1		1	Actuator body cylinder	750032
2		1	Air coupler adaptor	764249
3		1	Gasket	755451
4		1	Sealing nut	754328
5		1	Outer diaphragm clamp retainer	763805
6		1	Body insert	764088
7	□	1	Diaphragm	763501
8		1	Top diaphragm clamp retainer	763765
9		1	Inner diaphragm clamp retainer	763753
10		1	Nut retainer	754265
11		1	Adaptor	764089
12		1	Compression ring	750752
13		1	Bonnet	750504
14		1	Vented plug	181256
15	□	1	Bushing	764754
16		1	Actuator stem	776625
17	□	1	Coupler	

Parts marked with □ are included in the service kits.

□	**Service Kit**	**9613990134**

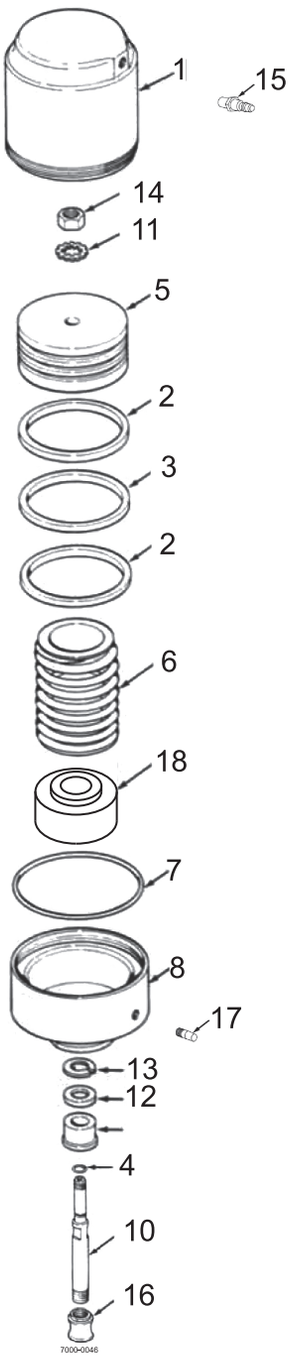
1
15
14
11
5
2
3
2
6
18
7
8
17
13
12
4
10
16
7000-0046

Pos		Qty	Denomination	
1		1	Actuator cylinder	750276
2	○	2	Vee block packing	755460
3	○	1	Felt seal	755464
4	○	1	O-ring	755388
5		1	Piston	767870
6		1	Spring assembly	750826
7	○	1	O-ring	296608
8		1	Bonnet	753796
10		1	Actuator stem	750328
11		1	Lockwasher	189971
12	○	1	Vee block packing	755461
13		1	Retaining ring	755090
14		1	Nut	189923
15		1	Air coupler adaptor	764098
16		1	Coupler	764241
17		1	Vented plug	181256
18		1	Spring guide	750141

Parts marked with ○ are included in the service kits.

○	**Service kit**	**752039**

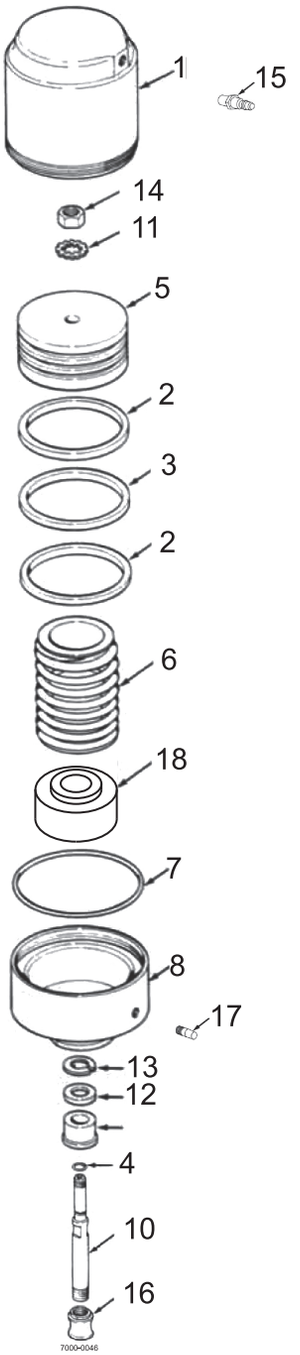
1
15
14
11
5
2
3
2
6
18
7
8
17
13
12
4
10
16
7000-0046

Pos		Qty	Denomination	
1		1	Actuator cylinder	750276
2	○	2	Vee block packing	755460
3	○	1	Felt seal	755464
4	○	1	O-ring	755388
5		1	Piston	767870
6		1	Spring assembly	750826
7	○	1	O-ring	296608
8		1	Bonnet	753796
10		1	Actuator stem	750328
11		1	Lockwasher	189971
12	○	1	Vee block packing	755461
13		1	Retaining ring	755090
14		1	Nut	189923
15		1	Air coupler adaptor	764098
16		1	Coupler	764241
17		1	Vented plug	181256
18		1	Spring guide	750141

Parts marked with ○ are included in the service kits.

○	**Service kit**	**752039**

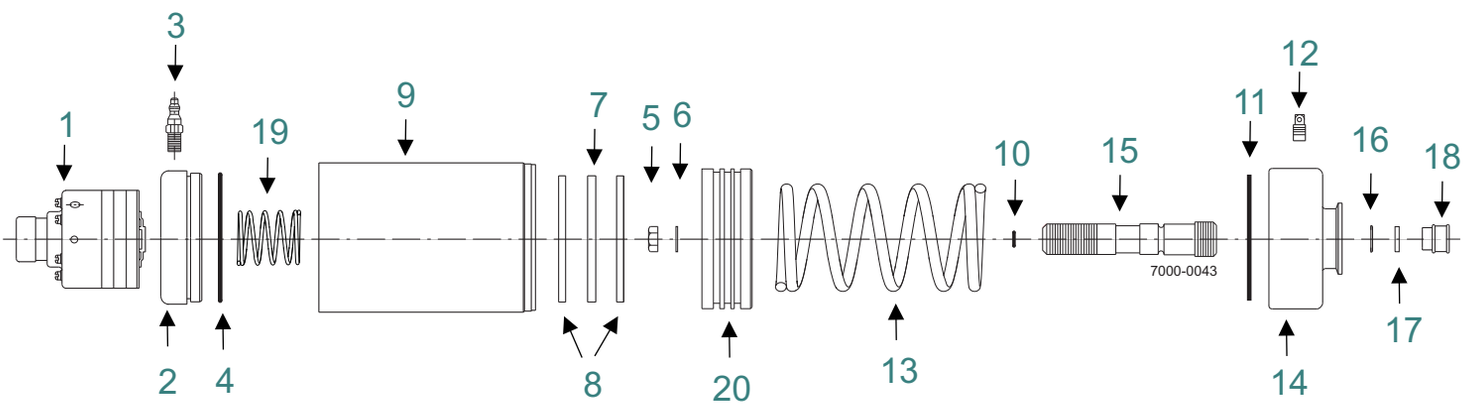
1
2
3
4
19
9
7
8
5
6
20
13
10
15
7000-0043
11
12
14
16
17
18

Pos		Qty	Denomination	Item #
1		1	Moore Positioner	769498
2		1	Upper Bonnet	750119
3		1	Pipe Plug	751541
4		1	O ring	755462
5		1	Nut	189923
6		1	Lockwasher	189971
7	□	1	Felt Seal	755464
8	□	2	Vee Block Packing	755460
9		1	Cylinder	750870
10	□	1	O Ring	755388
11	□	1	O Ring	296608
12		1	Vented Plug	181256
13		1	Spring Assembly	750826
14		1	Bonnet Assembly	753796
15		1	Actuator Stem	750328
16		1	Retaining Ring	755090
17	□	1	Vee Block Packing	755461
18		1	Coupler	764241
19		1	Spring Assembly	750998
20		1	Piston	750118

		Item #
□	**Service Kit**	**752039**

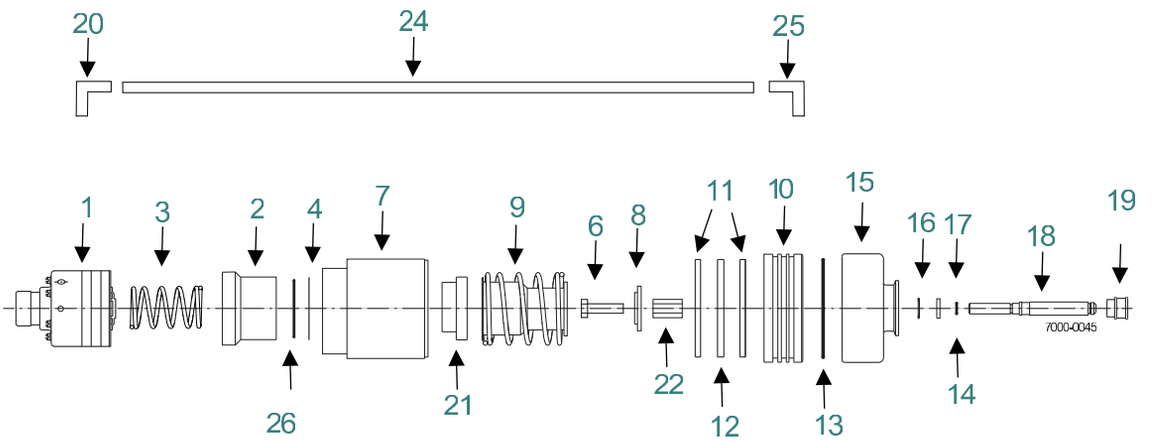
20
24
25
1
3
2
4
7
9
6
8
11
10
15
16
17
18
19
7000-0045
26
21
22
12
13
14

Pos		Qty	Denomination	Item #
1		1	Moore Positioner	769499
2		1	Positioner Adapter	764078
3		1	Range Spring	750998
4		1	Gasket	755549
5		1	Vent Plug	181256
6		1	Screw	189888
7		1	Cylinder	751508
8		1	Range Spring Adapter	761216
9		1	Spring Assembly	750826
10		1	Piston	767870
11	□	2	Vee Block Packing	755460
12	□	1	Felt Seal	755464
13	□	1	O Ring	755388
14	□	1	O Ring	296608
15		1	Bonnet	753796
16		1	Retaining Ring	755090
17	□	1	Vee Block Packing	755461
18		1	Actuator Stem	750328
19		1	Coupler	764241
20		1	Male Pipe Connector	766010
21		1	Adapter Retainer	751505
22		1	Spacer Nut	750504
23		1	Washer	189971
24		24”	Air Supply Line	765006
25		1	Male Pipe Connector	766009
26	□	1	O Ring	755530

Parts marked with □ are included in the service kits.

		Item #
□	**Service Kit**	**752039**

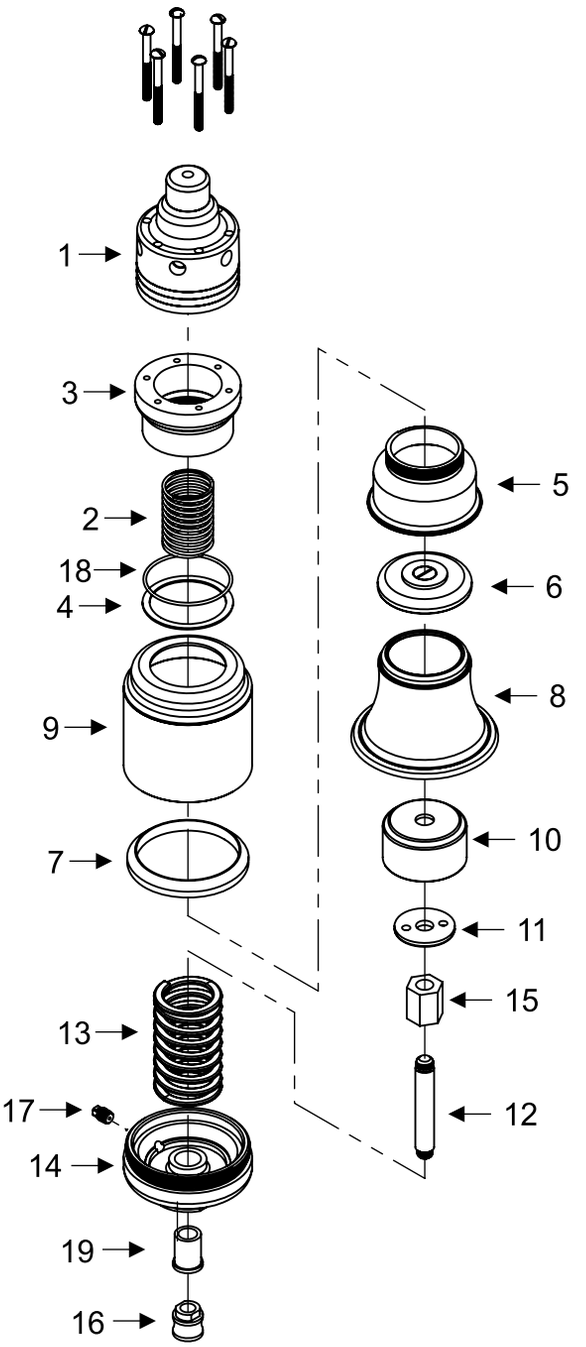
1
3
2
18
4
9
7
13
17
14
19
16
5
6
8
10
11
15
12

Pos		Qty	Denomination	
1		1	Moore Positioner	769498
		1	Moore Positioner, AR	769497
2		1	Range Spring	750998
3		1	Mounting Adapter	764078
4		1	Gasket	755549
5		1	Outer Diaphragm Clamp	763794
6		1	Inner Diaphragm Clamp	763795
7		1	Body Insert	764088
8	□	1	Diaphragm	763501
9		1	Actuator Cylinder	771543
10		1	Inner Diaphragm Guide	763753
11		1	Nut	754265
12		1	Stem	776689
13		1	Spring	750752
14		1	Bonnet	750504
15		1	Adapter	764089
16	□	1	Coupler	764241
17		1	Vented Plug	181256
18		1	O Ring	755530
19	□	1	Bushing	764754

Parts marked with □ are included in the service kits.

□	Service Kit	96139901

Not manufactured anymore

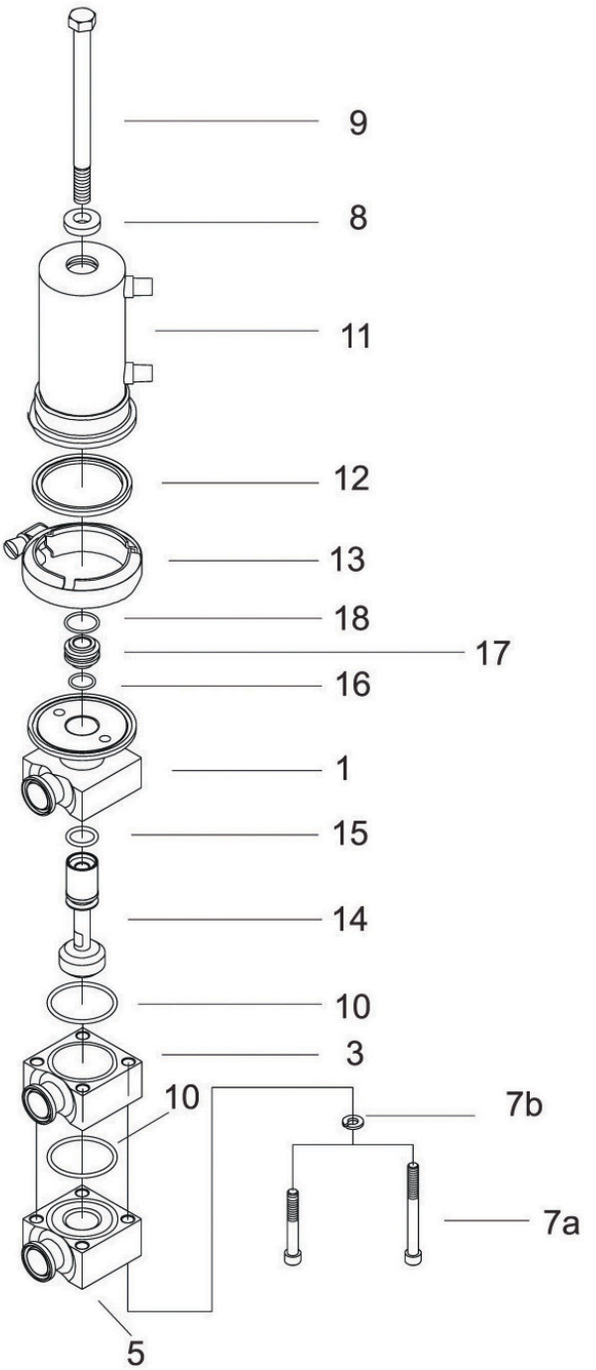

Pos		Qty	Denomination	1/2”	3/4”
1		2	A stage valve body (tee)	NA	NA
3		1	B stage valve body (tee)	NA	NA
5		1	C stage valve body (tee)	NA	NA
7A		4	Cap screw	180712	180712
7B		4	Lock washer	189985	189985
8		1	Washer	751713	751713
9		1	Bolt	180717	180717
10	□	2	O-ring BUNA	751740	751740
	□	2	O-ring EPDM	750415	750415
	□	2	O-ring SFY	751714	751714
11		1	Actuator type 10	750422	750422
		1	Actuator type 20	750429	750429
		1	Actuator type 30	750430	750430
12	□	1	Gasket BUNA	290285	290285
	□	1	Gasket EPDM	290105	290105
	□	1	Gasket SFY	3104694	3104694
13		1	Clamp	755035	755035
14		1	Stem BUNA	772007	772007
		1	Stem EPDM	770893	770893
		1	Stem SFY	772000	772000
15	□	1	O-ring BUNA	755357	755357
	□	1	O-ring EPDM	750037	750037
	□	1	O-ring SFY	750173	750173
16	□	1	O-ring BUNA	755542	755542
	□	1	O-ring EPDM	750728	750728
	□	1	O-ring SFY	751715	751715
17		1	Stem bushing	762951	762951
18	□	1	O-ring BUNA	750532	750532
	□	1	O-ring EPDM	751664	751664
	□	1	O-ring SFY	750401	750401

Parts marked with □ are included in the service kits.

		1/2”	3/4”
□	**Service Kit BUNA**	**9613990147**	**9613990147**
□	**Service Kit EPDM**	**9613990148**	**9613990148**
□	**Service Kit SFY**	**9613990149**	**9613990149**

Not manufactured anymore

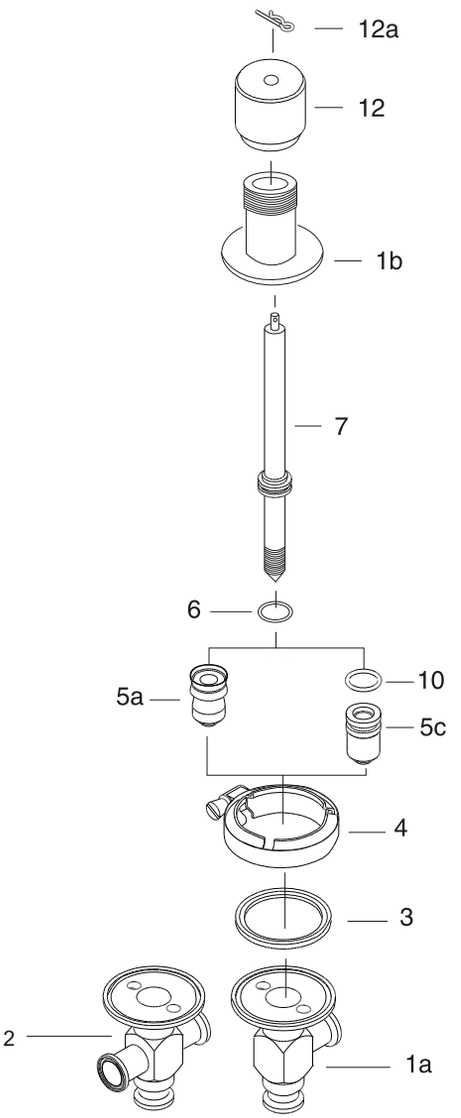

Pos		Qty	Denomination	1/2”	3/4”
1A		1	Lower body (tee)	NA	NA
1B		1	Bonnet	750506	750506
2		1	Lower body (cross)	NA	NA
3	□	1	Gasket SFY	3104694	3104694
4		1	Clamp	755035	755035
5A	□	1	PTFE plug w/lip seal	750480	750480
5B	□	1	Viton plug w/ lip seal (type 10)	750666	750666
5C	□	1	PTFE plug w/ O-ring	750598	750598
6	□	1	Stem O-ring SFY	290173	290173
7		1	Stem	771430	771430
10	□	1	Plug o ring #5c plug only	750173	750173
12A		1	Cotter pin	750526	750526
12		1	Handle	750501	750501

Parts marked with □ are included in the service kits.

		1/2”	3/4”
□	**Service kit “A”**	**9613990136**	**9613990136**
□	**Service kit “B”**	**9613990137**	**9613990137**
□	**Service kit “C” (for type 10)**	**9613990138**	**9613990138**
□	**Service kit “C” (for type 30)**	**9613990139**	**9613990139**

Not manufactured anymore

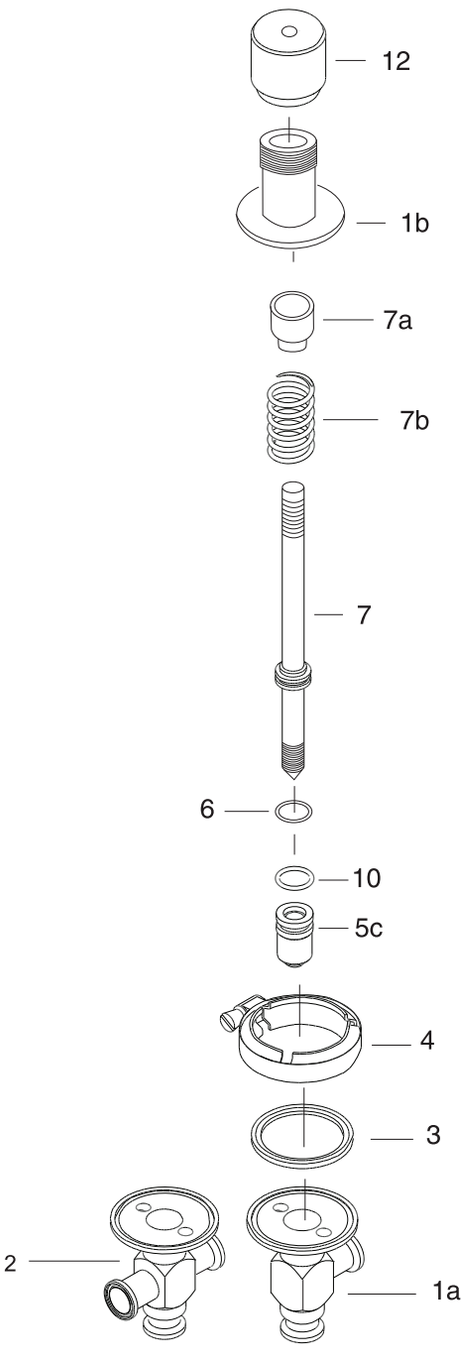

Pos	Qty	Denomination	1/2”	3/4”
1A	1	Lower body (tee)	NA	NA
1B	1	Bonnet	750506	750506
2	1	Lower body (cross)	NA	NA
3 □	1	Gasket SFY	3104694	3104694
4	1	Clamp	755035	755035
5A □	1	PTFE plug w/lip seal	750480	750480
5B □	1	Viton plug w/ lip seal (type 10)	750666	750666
5C □	1	PTFE plug w/ o ring	750598	750598
6	1	Stem O-ring SFY	290173	290173
7A	1	Spring spacer	750498	750498
7B	1	Spring	750491	750491
10 □	1	Plug o ring #5c plug only	750173	750173
12A	1	Cotter pin	750526	750526
12	1	Handle	750501	750501

Parts marked with □ are included in the service kits.

		1/2”	3/4”
□	**Service kit “A”**	**9613990136**	**9613990136**
□	**Service kit “B”**	**9613990137**	**9613990137**
□	**Service kit “C” (for type 10)**	**9613990138**	**9613990138**
□	**Service kit “C” (for type 30)**	**9613990139**	**9613990139**

Not manufactured anymore

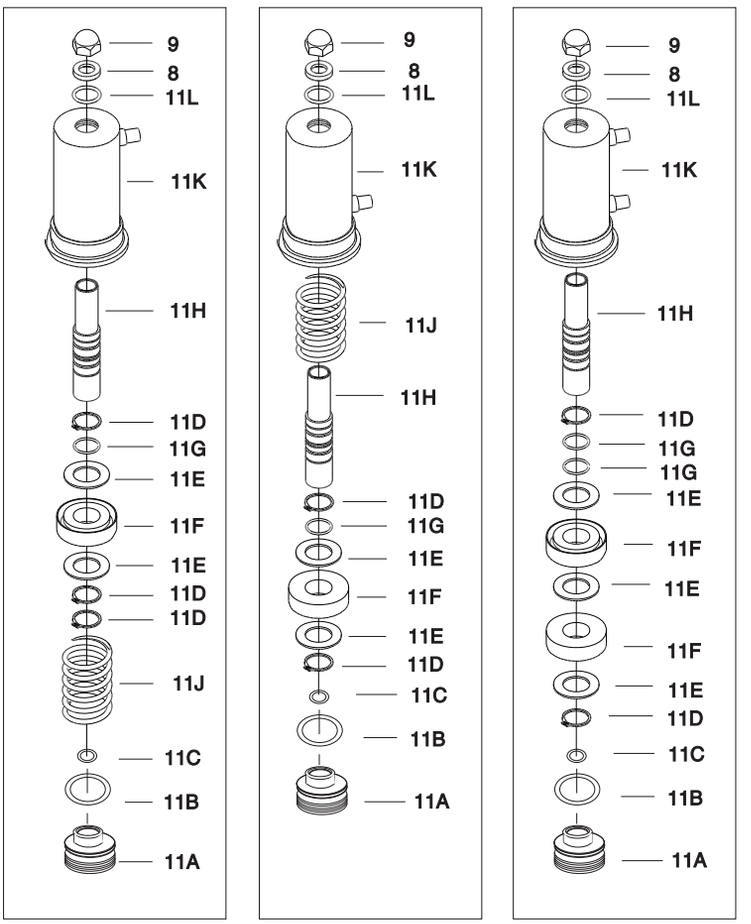

Type 10 Actuator Type 20 Actuator Type 30 Actuator

Pos	Qty	Denomination	Type 10	Type 20	Type 30
8	1	Stem washer	750407	750407	750407
9	1	Acorn nut	182349	182349	182349
11	1	Actuator complete	NA	NA	NA
11A	1	Actuator bonnet	750408	750408	750408
11B□	1	Outer bonnet O-ring	755518	755518	755518
11C□	1	Inner bonnet O-ring	750604	750604	750604
11D□	3	Retaining ring	750413	750413	750413
11E□	2	Piston washer	750323	750323	750323
11F	1	Piston	761846	761846	761846
11G□	1	Piston O-ring	750401	750401	750401
11H	1	Stem sleeve	761848	761848	761848
11J	1	Spring	750599	750599	NA
11K	1	Cylinder	750436	750438	750451
11L□	1	Stem sleeve O-ring	290173	290173	290173

Parts marked with □ are included in the service kits.

		Type 10	Type 20	Type 30
□	Service kit	9613990144	9613990145	9613990146

Not manufactured anymore

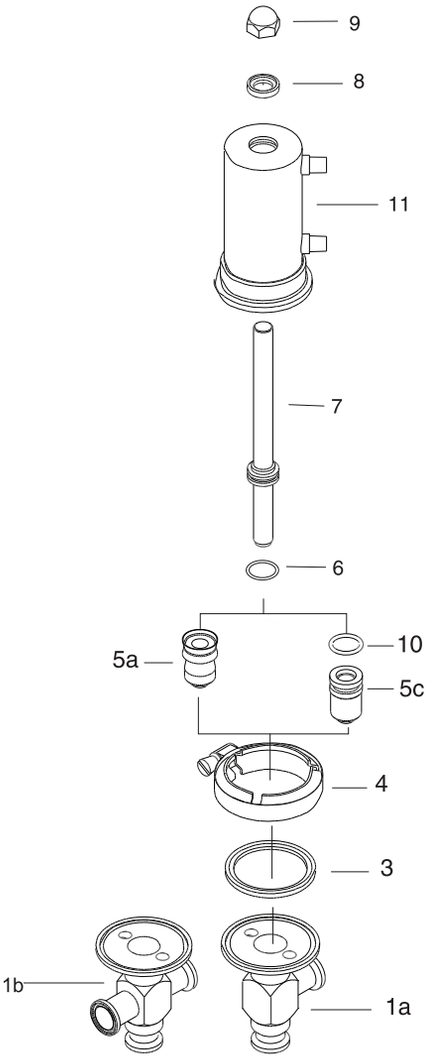

Pos		Qty	Denomination	1/2”	3/4”
1		1	Valve body tee type clamp	NA	NA
2		1	Valve body cross type clamp	NA	NA
3	□	1	Body gasket	3104694	3104694
4		1	Body clamp	755035	755035
5A	□	1	PTFE plug lip seal for 10 body	750480	750480
5B	□	1	Viton lip seal for 10 body	750666	750666
5C	□	1	PTFE plug w/o ring for 10 body	750598	750598
	□	1	PTFE plug w/o ring for 30 body	751786	751786
6	□	1	Stem o ring	750401	750401
7		1	Stem	770783	770783
8		1	Stem washer	750407	750407
9		1	Acorn nut	182349	182349
10		1	Plug o ring for 5c (plug only)	290173	290173
11		1	Actuator type 10	750422	750422
		1	Actuator type 20	750429	750429
		1	Actuator type 30	750430	750430

Parts marked with □ are included in the service kits.

		1/2”	3/4”
□	**Service Kit “A”**	**9613990140**	**9613990140**
□	**Service Kit “B”**	**9613990141**	**9613990141**
□	**Service Kit “C” (for type 10)**	**9613990142**	**9613990142**
□	**Service Kit “C” (for type 30)**	**9613990143**	**9613990143**

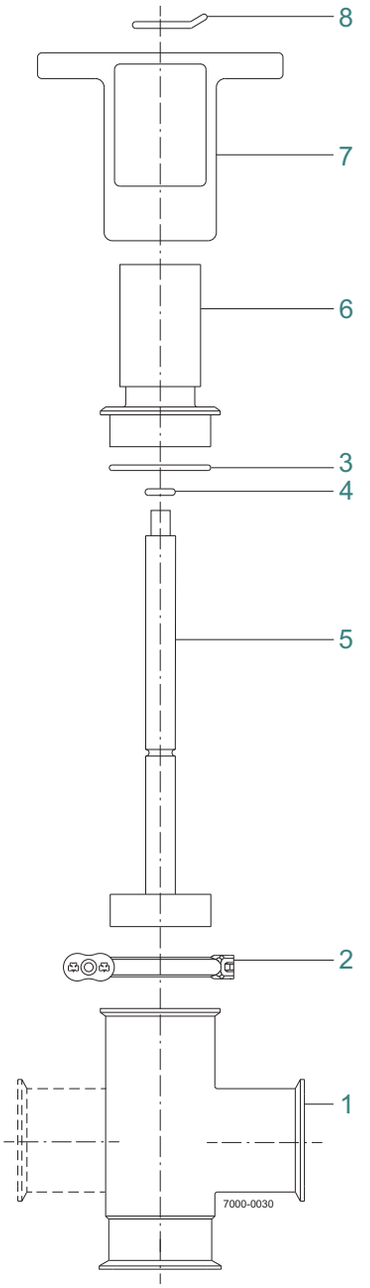
8
7
6
3
4
5
2
1
7000-0030

Pos		Qty	Denomination	1”	1 1/2”	2”	2 1/2”	3”
1		1	Body	NA	NA	NA	NA	NA
2		1	Clamp	212195	212195	212196	212197	212198
3	□	1	Gasket, BUNA	298452	298452	298453	298454	298455
	♦	1	Gasket, SFY	290022	290022	290030	290040	290049
4	□	1	O Ring, BUNA	299057	299057	299057	299057	299060
	♦	1	O Ring, SFY	290010	290010	290010	290010	290161
5		1	Stem, BUNA	620592	620594	620596	620598	620600
		1	Stem, SFY	620348	620765	620330	620339	620347
6		1	Bonnet	620582	620584	620586	620588	620590
7		1	Handle	720756	722115	722115	724287	724287
8		1	Lock Clip	628530	628531	628531	628531	628531

Parts marked with □♦ are included in the service kits.

Table 1. D60CR-Size-02A-Mat’l

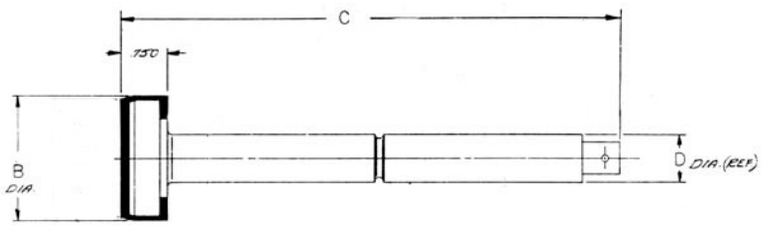

Size	B	C	D
1”	.960	5.687	.500
1 1/2”	1.460	7.750	.750
2”	1.960	8.531	.750
2 1/2”	2.460	10.437	.750
3”	2.960	10.537	1.000

		1”	1 1/2”	2”	2 1/2”	3”
□	Service Kit BUNA	9613990636	9613990638	9613990640	9613990642	9613990644
♦	Service Kit SFY	9613990637	9613990639	9613990641	9613990643	9613990645

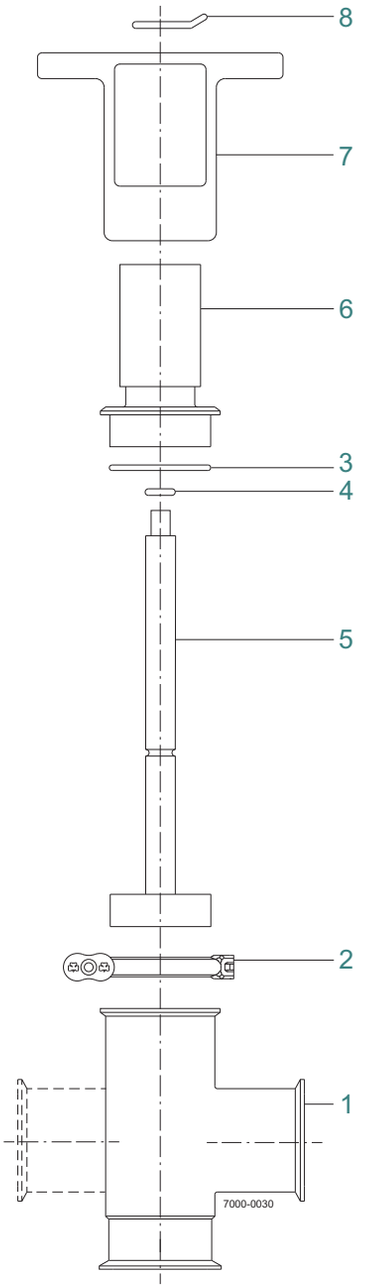
8
7
6
3
4
5
2
1
7000-0030

Pos		Qty	Denomination	1”	1 1/2”	2”	2 1/2”	3”
1		1	Body	NA	NA	NA	NA	NA
2		1	Clamp	212195	212195	212196	212197	212198
3	□	1	Gasket, BUNA	298452	298452	298453	298454	298455
	♦	1	Gasket, SFY	290022	290022	290030	290040	290049
4	□	1	O Ring, BUNA	299057	299057	299057	299057	299060
	♦	1	O Ring, SFY	290010	290010	290010	290010	290161
5		1	Stem	620529	NA	NA	NA	NA
6		1	Bonnet	620582	620584	620586	620588	620590
7		1	Handle	720756	722115	722115	724287	724287
8		1	Lock Clip	628530	628531	628531	628531	628531

Parts marked with □♦ are included in the service kits.

		1”	1 1/2”	2”	2 1/2”	3”
□	Service Kit BUNA	9613990636	9613990638	9613990640	9613990642	9613990644
♦	Service Kit SFY	9613990637	9613990639	9613990641	9613990643	9613990645

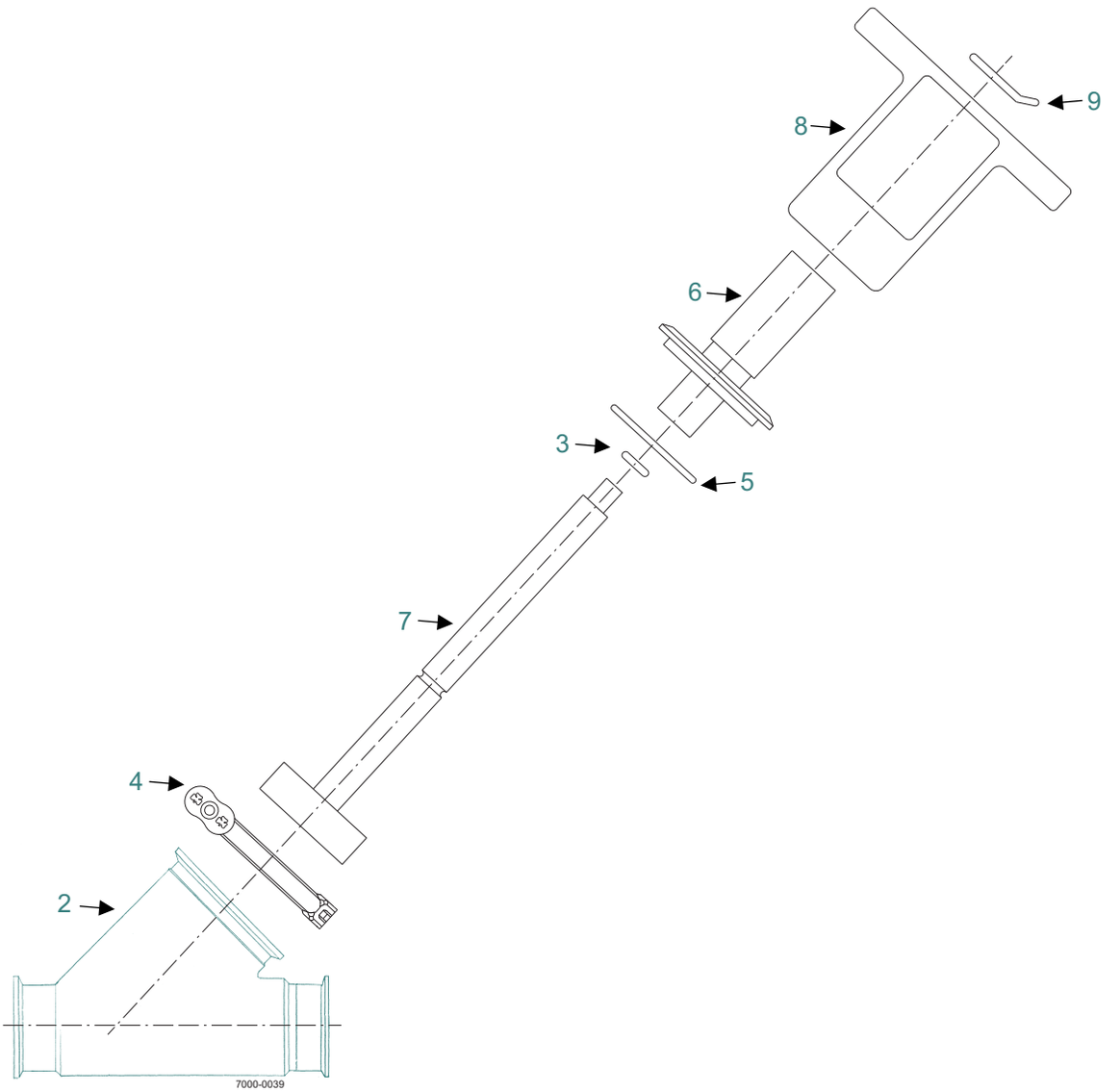
9
8
6
3
5
7
4
2
7000-0039

Pos		Qty	Denomination	1”	1 1/2”	2”	2 1/2”	3”	4”
2		1	Body	NA	NA	NA	NA	NA	NA
3	□	1	O ring, BUNA	299056	299057	299057	299057	299060	299060
	♦	1	O ring, SFY	290011	290010	290010	290010	290161	NA
4		1	Body Clamp	621057	212197	212198	212199	212211	NA
5	□	1	Gasket, BUNA	299317	298454	298455	298456	298360	299320
6		1	Bonnet	621061	622163	623356	623356	625746	NA
7		1	Stem, BUNA	620076	620113	620125	620160	620168	620177
		1	Stem, SFY	620074	620110	620121	620159	620164	620176
8		1	Handle	720756	722115	722115	724287	726356	726356
9		1	Lock Clip	628530	628531	628531	628531	628531	628531

Parts marked with □♦ are included in the service kits.

Table 2. 60YR-Size-02H-316-Mat'l

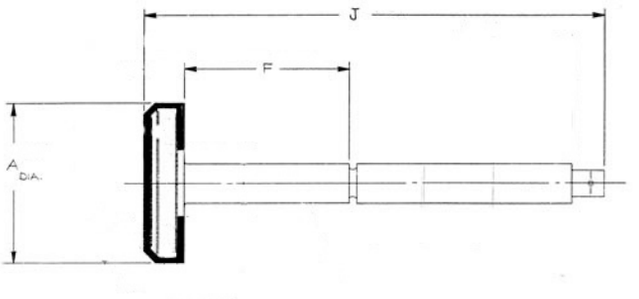

Size	A	F	J
1”	1.424	1.812	5.656
1 1/2”	2.290	2.375	7.937
2”	2.924	3.125	8.734
2 1/2”	3.795	4.250	10.375
3”	4.545	5.000	12.406
4”	5.920	6.375	15.250

		1”	1 1/2”	2”	2 1/2”	3”	4”
□	Service Kit BUNA	9613990646	9613990648	9613990650	9613990652	9613990654	NA
♦	Service Kit SFY	9613990647	9613990649	9613990651	9613990653	9613990655	NA

This is Alfa Laval

Alfa Laval is active in the areas of Energy, Marine, and Food & Water, offering its expertise, products, and service to a wide range of industries in some 100 countries. The company is committed to optimizing processes, creating responsible growth, and driving progress – always going the extra mile to support customers in achieving their business goals and sustainability targets.

Alfa Laval's innovative technologies are dedicated to purifying, refining, and reusing materials, promoting more responsible use of natural resources. They contribute to improved energy efficiency and heat recovery, better water treatment, and reduced emissions. Thereby, Alfa Laval is not only accelerating success for its customers, but also for people and the planet. Making the world better, every day. It's all about Advancing better™.

How to contact Alfa Laval

Contact details for all countries are continually updated on our web site. Please visit www.alfalaval.com to access the information.

100001664-1-EN 2209

